(2) Indien 'n gemagtigde beampte van mening is dat 'n hond 'n hond is soos bedoel in subregulasie (1), kan hy die eienaar van sodanige hond skriftelik opdrag gee om die hond uit die raadsgebied te verwyder en moet die eienaar sodanige hond binne 96 uur, bereken vanaf 12h00 op die dag waarop sodanige kennisgewing aan hom beteken is, aldus verwyder, en indien die eienaar nalaat om die opdrag uit te voer, kan die gemagtigde beampte die hond skut en ooreenkomstig regulasies 12 en 13 daarmee handel.

(3) Die Raad is nie aanspreeklik vir betaling van skadevergoeding aan enige persoon wat op 'n hond bedoe lin subregulasie (1), aanspraak maak, ten opsigte van enige handeling ingevolge hierdie regulasie nie.

HOND MOET AAN LEIBAND VAS WEES

17. (1) Niemand mag toelaat dat enige hond op straat of in 'n openbare plek losloop nie, en 'n hond moet aan 'n leiband of ketting en onder beheer gehou word.

(2) 'n Gemagtigde beampte kan 'n hond wat nie aan 'n leiband of ketting vas is nie, skut, en met sodanige hond word gehandel ooreenkomstig regulasie 10 of 12 van hierdie regulasies.

HONDE MAG NIE AANGEHITS WORD NIE

18. Niemand mag sonder redelike gronde—

(a) 'n hond teen 'n persoon of dier aanhits nie; of

(b) toelaat dat 'n hond onder sy toesig of in sy besit 'n persoon of dier aanval of die skrik op die lyf jaag nie.

VORMS

19. Die Raad of iemand deur hom daartoe gemagtig, skryf enige vorm voor wat nodig is vir die behoorlike toepassing van hierdie regulasies.

VERMOEDENS

20. Indien daar kragtens hierdie regulasies geregtelike stappe teen iemand gedoen word op grond daarvan dat hy—

(a) 'n hond ouer as twee maande aanhou sonder dat dit geregistreer is;

(b) 'n hond ouer as ses maande aanhou sonder dat hy die heffing ten opsigte van die hond betaal het; of

(c) 'n teef aanhou wat nie gesteriliseer is nie; word sodanige hond geag reeds twee of ses maande, na gelang van die geval, oud te wees of ouer, of geag nie gesteriliseer te wees nie, tensy en tot tyd en wyl die teendeel bewys is.

MISDRYWE EN STRAWWE

21. (1) Enige persoon wat—

(a) enige bepaling van hierdie regulasies oortree;

(b) enige verklaring met betrekking tot die eienaarskap of die registrasie van 'n hond aan 'n gemagtigde beampte doen wat in enige belangrike opsig vals is, wetende dat dit vals is;

(c) weier of in gebreke bly om op enige vraag wat 'n gemagtigde beampte, in die uitoefening van sy bevoegdhede of vervulling van sy pligte ingevolge hierdie regulasies, aan hom gestel het, na sy beste vermoë te antwoord;

(2) In the event of an authorised officer being of the opinion that a dog is a dog contemplated in subregulation (1), he may order the owner of such dog in writing to remove such dog from the area of the Council and the owner shall thus remove such dog within 96 hours of 12h00 on the day when such notice was served and if the owner of such dog fails to comply with such written order the authorised officer may impound the dog and deal with it in terms of regulations 12 and 13.

(3) The Council shall not be liable to pay any compensation to any person who lays claim to any dog contemplated in subregulation (1) in respect of any action in terms of these regulations.

DOGS TO BE ON LEAD

17. (1) No person shall permit any dog to be at large in a street or public place and shall keep any dog on a leash or chain and under control.

(2) Any authorised officer may impound a dog which is not kept on a leash or chain and such dog shall be dealt with in accordance with regulation 10 or 12 of these regulations.

DOGS NOT TO BE URGED TO ATTACK

18. No person shall, without reasonable cause—

(a) set any dog on any person or animal;

(b) permit any dog in his custody or possession to attack or terrify any person or animal.

FORMS

19. The Council or any person authorised to do so by it shall prescribe any form which may be necessary for the proper execution of these regulations.

PRESUMPTION

20. In any proceedings instituted in terms of these regulations against any person on the grounds that—

(a) he is keeping a dog older than two months without it having been registered;

(b) he is keeping a dog older than six months without having paid the levy in respect of the dog; or

(c) he is keeping an unspayed bitch;

such dog shall be deemed to be two or six months of age or older or to be unspayed, until and unless the contrary is proved.

OFFENCES AND PENALTIES

21. (1) Any person who—

(a) contravenes any of the provisions of these regulations;

(b) makes any statement in respect of the ownership or the registration of a dog to any authorised officer which is false in any material particular knowing the same to be false;

(c) refuses or fails to answer to the best of his ability any question which an authorised officer has put to him in the execution of his powers or duties in terms of these regulations;

University of Fort Hare
Together in Excellence

(d) weier of in gebreke bly om na sy beste vermoë te voldoen aan enige vereiste deur 'n gemagtigde beampte in die uitoefening van sy genoemde bevoegdhede of die vervulling van sy pligte gestel;

(e) hom verset teen enige gemagtigde beampte of so 'n beampte hinder of belemmer in die uitvoering van enigeen van die bevoegdhede of die vervulling van enigeen van die pligte wat aan hom verleen of opgedra is by hierdie regulasies;

(f) valslik voorgee dat hy 'n gemagtigde beampte is;

(g) 'n dokument namaak met die doel om sodanige dokument uit te gee as 'n registrasiesertifikaat wat kragtens hierdie regulasies uitgereik is;

(h) 'n nagemaakte dokument gebruik of in omloop bring wat as 'n registrasiesertifikaat uitgegee kan word; of

(i) 'n registrasiesertifikaat wat aan iemand anders kragtens hierdie regulasies uitgereik is, steel of in besit daarvan gevind word sonder dat hy bevredigende rekenskap kan gee van hoe dit in sy besit gekom het;

begaan 'n misdryf, en is by skuldigbevinding strafbaar met 'n boete van hoogstens R50, of, by wanbetaling, met gevangenisstraf vir 'n tydperk van hoogstens drie maande.

(2) 'n Hof wat iemand skuldig bevind dat hy 'n hond aanhou sonder dat dit behoorlik geregistreer is of onder beheer gehou word, ooreenkomstig die bepalings van hierdie regulasies, kan, benewens die straf bedoel in subregulasie (1), beveel dat die betrokke hond van kant gemaak word, en daarna kan 'n gemagtigde beampte sodanige hond van kant maak.

(d) refuses or fails to comply to the best of his ability with any requirement of an authorised officer in the execution of his said powers or duties;

(e) resists or hinders or obstructs any authorised officer in the execution of any of the powers or duties conferred or imposed upon him by these regulations;

(f) falsely represents himself to be an authorised officer;

(g) fabricates any document with intent to utter such document as a registration certificate issued in terms of these regulations;

(h) uses or or circulates any fabricated document which may be uttered as a registration certificate; or

(i) steals or is found to be in possession of a registration certificate, issued to someone else in terms of these regulations, without being able to account satisfactorily for possession thereof;

shall commit an offence and shall on conviction be liable to a fine not exceeding R50 or, in default of payment, to imprisonment for a period not exceeding three months.

(2) Any Court convicting any person of keeping any dog without it having been properly registered or kept under control in accordance with the provisions of these regulations may, in addition to the penalty referred to in subregulation (1), order the destruction of the dog concerned and, thereupon, an authorised officer may destroy such dog.

FLORA VAN SUIDELIKE AFRIKA

'n Taksonomiese behandeling van die flora van die Republiek van Suid-Afrika, Lesotho, Swaziland en Suidwes-Afrika. Sal bestaan uit 33 volumes, nie in numeriese volgorde nie.

Reeds beskikbaar:

Vol. 26 (1963): Prys R4,60. Buitelands R5,75, posvry.

Vol. 1 (1966): Prys R1,75. Buitelands R2,20, posvry.

Vol. 13 (1970): Prys R10. Buitelands R12, posvry.

Vol. 16 Deel 1 (1975): Prys R13,50. Buitelands R16,75, posvry.
Deel 2 (1977): Prys R16. Buitelands R20, posvry.

Vol. 22 (1976): Prys R8,60. Buitelands R10,75, posvry.

Vol. 9 (1978): Prys R4,25. Buitelands R5,30, posvry.

Verkrygbaar van die Direkteur, Afdeling Landbou-inligting, Privaatsak X144, Pretoria.

Verkoopbelasting moet by binnelandse bestellings ingesluit word.

FLORA OF SOUTHERN AFRICA

A taxonomic treatment of the flora of the Republic of South Africa, Lesotho, Swaziland and South West Africa. To be completed in 33 volumes, not in numerical sequence.

Now available:

Vol. 26 (1963): Price R4,60. Other countries R5,75, post free.

Vol. 1 (1966): Price R1,75. Other countries R2,20, post free.

Vol. 13 (1970): Price R10. Other countries R12, post free.

Vol. 16 Part 1 (1975): Price R13,50. Other countries R16,75, post free.
Part 2 (1977): Price R16. Other countries R20, post free.

Vol. 22 (1976): Price R8,60. Other countries R10,75, post free.

Vol. 9 (1978): Price R4,25. Other countries R5,30, post free.

Obtainable from the Director, Division of Agricultural Information, Private Bag X144, Pretoria.

Sales tax must accompany inland orders.

THE ONDERSTEPOORT JOURNAL OF VETERINARY RESEARCH

Die "Onderstepoort Journal of Veterinary Research" word deur die Staatsdrukker, Pretoria, gedruk en is verkrygbaar van die Direkteur, Afdeling Landbou-inligting, Departement van Landbou-tegniese Dienste, Privaatsak X144, Pretoria, 0001, aan wie ook alle navrae in verband met die tydskrif gerig moet word.

Hierdie publikasie is 'n voortsetting van die "Reports of the Government Veterinary Bacteriologist of the Transvaal" wat terugdateer tot 1903 en waarvan 18 verskyn het tot 1932. Dit is gevolg deur 40 volumes van die "Onderstepoort Journal". Tans bestaan elke volume uit vier nommers wat teen R2 binnelands en R2,50 buitelands per nommer van bogenoemde adres verkrygbaar is.

Direkteure van laboratoriums ens. wat begerig is om publikasies om te ruil moet in verbinding tree met die Direkteur, Navorsings-instituut vir Veeartsenykunde, Pk. Onderstepoort, 0110, Republiek van Suid-Afrika.

Verkoopbelasting moet by binnelandse bestellings ingesluit word.

THE ONDERSTEPOORT JOURNAL OF VETERINARY RESEARCH

The Onderstepoort Journal of Veterinary Research is printed by the Government Printer, Pretoria, and is obtainable from the Director, Division of Agricultural Information, Department of Agricultural Technical Services, Private Bag X144, Pretoria, 0001, to whom all communications should be addressed.

This publication is a continuation of the Reports of the Government Veterinary Bacteriologist of the Transvaal which date back to 1903 and of which 18 have appeared up to 1932. These were followed by 40 volumes of the Onderstepoort Journal. At present each volume comprises four numbers which are obtainable at R2, other countries R2,50 per number from the above address.

Directors of laboratories etc. desiring to exchange publications are invited to communicate with the Director, Veterinary Research Institute, P.O. Onderstepoort, 0110, Republic of South Africa.

Sales tax must accompany inland orders.

University of Fort Hare
Together in Excellence

DIE BLOMPLANTE VAN AFRIKA

Hierdie publikasie word uitgegee as 'n geïllustreerde reeks, baie na die aard van Curtis se "Botanical Magazine". Die doel van die werk is om die skoonheid en variasie van vorm van die flora van Afrika aan die leser bekend te stel, om belangstelling in die studie en kweek van die inheemse plante op te wek, en om plantkunde in die algemeen te bevorder.

Die meeste van die illustrasies word deur kunstenaars van die Navorsingsinstituut vir Plantkunde gemaak, dog die redakteur verwelkom geskikte bydraes van 'n wetenskaplike en kunsstandaard afkomstig van verwante inrigtings.

Onder huidige omstandighede word twee dele van die werk gelyktydig gepubliseer, maar met onreëlmatige tussenpose; elke deel bevat tien kleurplate. Intekengeld bedra R5 per deel (buitelands R5,25 per deel): Vier dele per band. Vanaf band 27 is die prys per band in linne gebind R30; in moroccoleer gebind R35. (Buitelands, linne gebind R31; moroccoleer R36).

Verkrygbaar van die Direkteur, Afdeling Landbou-inligting, Privaatsak X144, Pretoria.

Verkoopbelasting moet by binnelandse bestellings ingesluit word.

THE FLOWERING PLANTS OF AFRICA

This publication is issued as an illustrated serial, much on the same lines as Curtis's Botanical Magazine, and for imitating which no apology need be tendered.

The desire and object of the promoters of the publication will be achieved if it stimulates further interest in the study and cultivation of our indigenous plants.

The illustrations are prepared mainly by the artists at the Botanical Research Institute, but the Editor welcomes contributions of suitable artistic and scientific merit from kindred institutions.

Each part contains 10 plates and costs R5 per part (other countries R5,25 per part). Two, three or four parts may be published annually, depending on the availability of illustrations. A volume consists of four parts. From Volume 27, the price per volume is: Cloth binding, R30; morocco binding, R35 (other countries, cloth binding R31; morocco binding R36).

Obtainable from the Director, Division of Agricultural Information, Private Bag X144, Pretoria.

Sales tax must accompany inland orders.

INHOUD

No.		Bladsy No.	Staatskoerant No.
Samewerking en Ontwikkeling, Departement van			
Goewermentskennisgewings			
R. 1748	Wet op Gemeenskapsrade (125/1977): Regulasies: Beheer oor aanhou van honde: Heidelberg	1	7193
R. 1749	do.: do.: Kroonstad	7	7193

CONTENTS

No.		Page No.	Gazette No.
Co-operation and Development, Department of			
Government Notices			
R. 1748	Community Development Act (125/1977): Regulations: Control of keeping of dogs: Heidelberg	1	7193
R. 1749	do.: do.: Kroonstad	7	7193

University of Fort Hare
Together in Excellence

7194
University of Fort Hare
Together in Excellence

STAATSKOERANT
VAN DIE REPUBLIEK VAN SUID-AFRIKA

REPUBLIC OF SOUTH AFRICA
GOVERNMENT GAZETTE

REGULASIEKOERANT No. 3058 | PRYS + 1c AVB 20c BUITELANDS 30c POSVRY · POST FREE | PRICE + 1c GST ABROAD | REGULATION GAZETTE No. 3058

As 'n Nuusblad by die Poskantoor Geregistreer | *Registered at the Post Office as a Newspaper*

Vol. 182] PRETORIA, 22 AUGUSTUS / AUGUST 1980 [No. 7194

GOEWERMENTSKENNISGEWINGS

GOVERNMENT NOTICES

DEPARTEMENT VAN SAMEWERKING EN ONTWIKKELING

No. R. 1750 22 Augustus 1980

REGULASIES BETREFFENDE DIE BEHEER OOR DIE AANHOU VAN HONDE BINNE DIE REGSGEBIED VAN DIE GEMEENSKAPSRAAD VAN SPRINGS (KWA-THEMA)

Ek, George de Villiers Morrison, Adjunk-minister van Samewerking, namens en in opdrag van die Minister van Samewerking en Ontwikkeling, kragtens die bevoegdheid hom verleen by artikel 11 (1) (fA) van die Wet op Gemeenskapsrade, 1977 (Wet 125 van 1977), maak hierby bekend dat die regulasies in die bygaande Bylae vervat, kragtens 'n besluit deur die Gemeenskapsraad van Springs ingevolge artikel 5 (1) (a) (vii) van genoemde Wet geneem, met ingang van die datum van hierdie kennisgewing, op die regsgebied van daardie Raad van toepassing is.

G. DE V. MORRISON, Adjunk-minister van Samewerking.

(Lêer A2 14 4 S47)

BYLAE

WOORDOMSKRYWING

1. In hierdie regulasies, tensy uit die samehang anders blyk, beteken—

"eienaar", met betrekking tot 'n hond, iemand wat 'n hond aanhou, en sluit dit enige persoon in aan wie 'n hond toevertrou is of wat beheer oor 'n hond het, asook die persoon aan wie 'n perseel- of woonpermit uitgereik is ingevolge die regulasies gepubliseer by Goewermentskennisgewing R. 1036 van 1968, ten opsigte van enige perseel binne die raadsgebied waar enige hond aangehou word of toegelaat word om te lewe of te bly, tensy sodanige persoon in staat is om te bewys dat hy nie die eienaar van daardie hond is nie en dat die hond sonder sy goedkeuring of wete toegelaat is om op sodanige perseel aangehou te word of te lewe of te bly;

DEPARTMENT OF CO-OPERATION AND DEVELOPMENT

No. R. 1750 22 August 1980

REGULATIONS ON THE CONTROL OF THE KEEPING OF DOGS WITHIN THE AREA OF JURISDICTION OF THE COMMUNITY COUNCIL OF SPRINGS (KWA-THEMA)

I, George de Villiers Morrison, Deputy Minister of Co-operation, on behalf of and by direction of the Minister of Co-operation and Development, by virtue of the powers vested in him by section 11 (1) (fA) of the Community Councils Act, 1977 (Act 125 of 1977), hereby announce that the regulations contained in the accompanying Schedule are, by virtue of a decision taken by the Community Council of Springs in terms of section 5 (1) (a) (vii) of the said Act, applicable to the area of jurisdiction of that Council as from the date of this notice.

G. DE V. MORRISON, Deputy Minister of Co-operation.

(File A2/14/4/S47)

SCHEDULE

DEFINITIONS

1. In these regulations, unless the context otherwise indicates—

"area of the Council" means the urban residential area for which the Council was established;

"authorised officer" means any person appointed by the Council in terms of these regulations to exercise the powers or perform the functions granted or imposed on him in terms of these regulations;

"Council" means the Springs Community Council established by Government Notice R. 758 of 1978;

"dog" means both a dog and a bitch;

"levy" means the levy imposed in terms of regulation 6;

"office of the Council" means any office of the Council;

"gemagtigde beampte" enige persoon deur die Raad kragtens hierdie regulasies aangestel om die bevoegdhede en pligte ingevolge hierdie regulasies aan hom verleen of opgelê, uit te oefen of te vervul;

"gesteriliseerde teef" 'n teef ten opsigte waarvan 'n veearts, geregistreer kragtens die Veeartswet, 1933 (Wet 16 van 1933), 'n sertifikaat uitgereik het ten effekte dat sodanige teef gesteriliseer is;

"heffing" die heffing ingevolge regulasie 6 gehef;

"hond" 'n reun sowel as 'n teef;

"jaar" or "jaarliks" onderskeidelik 'n tydperk of betreffende 'n tydperk van 12 maande wat op 31 Desember eindig;

"openbare plek" enige pad, straat, deurgang, brug, duikweg, sypaadjie, oop veld, tuin, park, omheinde gebied of gebou binne die raadsgebied wat vir die publiek toeganklik is;

"Raad" die Springsse Gemeenskapsraad, ingestel by Goewermentskennisgewing R. 758 van 1978;

"raadsgebied" die stedelike woongebied waarvoor die Raad ingestel is;

"raadskantoor" enige kantoor van die Raad;

"verwyderingsgelde" die gelde wat betaalbaar is wanneer 'n hond ingevolge die bepalings van hierdie regulasies deur 'n gemagtigde beampte of ander persoon gevang en vervoer is na die skut.

VEREISTES VIR AANHOU VAN HONDE

2. Niemand mag binne die raadsgebied 'n hond wat twee maande oud of ouer is, aanhou nie, tensy hy sodanige hond by die raadskantoor laat registreer het en, op die wyse hierin bepaal, die voorgeskrewe heffing (indien van toepassing) ten opsigte van die hond betaal het.

PERSOON VIR HEFFING AANSPREEKLIK

3. By die toepassing van hierdie regulasies is die eienaar verantwoordelik vir die registrasie van die hond en die betaling van die heffing, en word die persoon onder wie se sorg of toesig of in wie se besit of binne wie se huis of op wie se perseel 'n hond gevind of gesien word, geag die eienaar te wees, tensy hy die teendeel bewys.

REGISTRASIE VAN HONDE

4. (1) Die eienaar doen aansoek om die registrasie van 'n hond binne 30 dae ná die inwerkingtreding van hierdie regulasies of, indien sodanige hond dan nog nie in sy besit of onder sy beheer gekom het nie, binne 30 dae nadat daardie hond in sy besit of onder sy beheer gekom het, en daarna voor of op 31 Januarie van elke daaropvolgende jaar.

(2) Die registrasie van 'n hond word jaarliks gedoen en bly geldig tot en met 31 Desember van die jaar waarin dit gedoen is.

REGISTRASIESERTIFIKAAT

5. (1) 'n Registrasiesertifikaat word op die naam van die eienaar van 'n hond teen betaling van die heffing bedoel in regulasie 6, behoudens die bepalings van regulasie 7, op aansoek uitgereik.

(2) Die eienaar van enige hond ten opsigte waarvan 'n registrasiesertifikaat uitgereik is, bewaar die sertifikaat te alle tye gedurende die geldigheidsduur daarvan en toon dit op aanvraag van 'n gemagtigde beampte aan hom.

"owner" in relation to a dog means any person who keeps a dog and includes any person to whom a dog has been entrusted or who has control of a dog, and also the person to whom a site or residential permit has been issued in terms of the regulations published under Government Notice R. 1036 of 1968 in respect of any site within the area of the Council where any dog is kept or is permitted to live or remain, unless such person is able to prove that he is not the owner of such dog and that the dog was kept or allowed to live or remain on such site without his knowledge or consent.

"public place" means any road, street, thoroughfare, bridge, subway, sidewalk, open field, garden, park, fenced area or building within the area of the Council which is accessible to the public;

"removal fees" means the fees payable when a dog is caught and transported to the pound by an authorised officer or any other person in terms of the provisions of these regulations;

"spayed bitch" means a bitch in respect of which a veterinarian, registered under the Veterinary Act, 1933 (Act 16 of 1933), has issued a certificate to the effect that such bitch has been spayed;

"year" or "yearly" means or refers to, respectively, a period of 12 months ending on 31 December.

REQUIREMENTS FOR THE KEEPING OF DOGS

2. No person shall, within the area of the Council, keep a dog that is two months old or older, unless he has caused such dog to be registered at the office of the Council and, in the manner hereinafter provided, has paid the prescribed levy (if any) in respect of the dog.

PERSON LIABLE FOR LEVY

3. For the purposes of these regulations the owner shall be responsible for the registration of the dog and the payment of the levy and any person in whose custody, charge or possession, or within whose house or on whose premises any dog is found or seen, shall be deemed to be the owner, until he shall have proved the contrary.

REGISTRATION OF DOGS

4. (1) The owner shall apply for the registration of a dog within 30 days of the commencement of these regulations or, if such dog has then not yet come into his possession or under his control, within 30 days after the dog has came into his possession or under his control, and thereafter on or before 31 January of every ensuing year.

(2) The registration of a dog shall be carried out annually and shall remain valid up to and including 31 December of the year during which it was carried out.

REGISTRATION CERTIFICATE

5. (1) Any registration certificate shall be issued in the name of the owner of a dog on payment of the levy referred to in regulation 6, subject to the provisions of regulation 7, on application.

(2) The owner of any dog in respect of which a registration certificate has been issued shall preserve the certificate at all times for the period of validity thereof and shall produce it to any authorised officer on demand.

University of Fort Hare
Together in Excellence

(3) Geen registrasiesertifikaat kan van een persoon aan 'n nader persoon oorgedra word nie.

(4) Indien 'n registrasiesertifikaat verlore raak of vernietig word, kan 'n duplikaat daarvan teen betaling van 50c aan die voormalige houer daarvan uitgereik word.

HEFFINGS

6. By registrasie van 'n hond betaal die eienaar, behoudens die bepalings van hierdie regulasies, die jaarlikse heffing ten opsigte van elke hond wat hy binne die raadsgebied aanhou, teen onderstaande tarief:

(a) Vir die eerste reun of gesteriliseerde teef: R2.

(b) Vir 'n tweede of verdere hond van die tipe in paragraaf (a) bedoel: R10.

(c) Vir 'n ongesteriliseerde teef: R10.

(d) Vir 'n tweede of verdere hond van die tipe in paragraaf (c) bedoel: R15.

VRYSTELLING VAN DIE BETALING VAN HEFFINGS

7. (1) Geen heffing is betaalbaar nie ten opsigte van 'n hond—

(a) wat deur 'n blinde persoon as gids gebruik word;

(b) wat deur 'n persoon aangehou word indien daardie persoon 'n gepensioeneerde is wat weens hoë ouderdom of liggaamlike gebrek nie in staat is om 'n eie inkomste te verdien nie;

(c) wat jonger as ses maande is; of

(d) wat in die besit of bewaring is van die Dierebeskermingsvereniging of 'n ander soortgelyke liggaam deur die Raad goedgekeur.

(2) Die vrystelling bedoel in subregulasie (1) (a), (b) of (c), onthef nie die eienaar van die hond daarvan om aansoek te doen om die registrasie van die betrokke hond nie.

(3) 'n Registrasiesertifikaat word gratis aan die eienaar van 'n hond bedoel in subregulasie (1) (a), (b) of (c), uitgereik, met vermelding op sodanige sertifikaat van die rede van vrystelling: Met dien verstande dat die eienaar van 'n hond bedoel in subregulasie (1) (a) of (b), elke jaar om 'n gratis registrasiesertifikaat aansoek moet doen en die nodige bewys moet lewer dat hy op vrystelling van die betaling van die heffing geregtig is.

BEPERKING OP DIE AANHOU VAN HONDE

8. (1) Tensy die Raad in enige bepaalde geval anders bepaal, word daar op geen enkele perseel meer as een hond aangehou nie: Met dien verstande dat hierdie bepaling nie betrekking het op 'n teef se werpsel as sodanige werpsel jonger as twee maande oud is nie.

(2) 'n Perseel waarop honde aangehou word, moet só omhein wees dat die honde in die erf gehou kan word, en die heining moet behoorlik in stand gehou word.

GEMAGTIGDE BEAMPTES

9. (1) Die Raad kan een of meer persone as gemagtigde beamptes aanstel.

(2) 'n Gemagtigde beampte kan, met die doel om vas te stel of aan die bepalings van hierdie regulasie voldoen word—

(a) op alle redelike tye enige grond of perseel betree;

(3) No registration certificate shall be transferable from one person to any other person.

(4) If any registration certificate is lost or destroyed, a duplicate thereof may be issued to the former holder thereof on payment of 50c.

LEVIES

6. Upon registration of a dog the owner shall pay, subject to the provisions of these regulations, the annual levy in respect of every dog which is kept by him within the area of the Council, at the following rate:

(a) For the first dog or spayed bitch: R2.

(b) For a second or additional dog of the kind contemplated in paragraph (a): R10.

(c) For any unspayed bitch: R10.

(d) For any second or additional dog of the kind contemplated in paragraph (c): R15.

EXEMPTION FROM PAYMENT OF LEVIES

7. (1) No levy shall be payable in respect of any dog—

(a) which is used by a blind person as a guide;

(b) which is kept by a person if such person is a pensioner who, due to old age or disability, is unable to earn an income of his own;

(c) which is younger than six months; or

(d) which is in the possession or under the control of the Society for the Prevention of Cruelty to Animals or any similar body approved by the Council.

(2) The exemption referred to in subregulation (1) (a), (b) or (c) shall not exempt the owner of the dog from applying for the registration of the dog concerned.

(3) A registration certificate shall be issued free of charge to the owner of a dog referred to in subregulation (1) (a), (b) or (c) with a mention on such certificate of the reason for the exemption: Provided that the owner of a dog contemplated in subregulation 1 (a) or (b) shall be required to apply every year for a free registration certificate, submitting the necessary proof that he is entitled to be exempted from the payment of the levy.

RESTRICTION ON THE KEEPING OF DOGS

8. (1) Unless the Council in any particular case determines otherwise, not more than one dog may be kept on any single site: Provided that this provision shall not apply to the litter of a bitch when such litter is younger than two months.

(2) Any site where dogs are kept shall be fenced in such a way that the dogs can be kept within the site and the fence shall be kept in good repair.

AUTHORISED OFFICERS

9. (1) The Council may appoint one or more persons as authorised officers.

(2) An authorised officer may, for the purpose of ascertaining whether the provisions of these regulations are being complied with—

(a) at all reasonable times enter upon any land or premises;

University of Pretoria

(b) op die naam en adres van enige persoon wat die eienaar van 'n hond is of wat oenskynlik in beheer van 'n hond is, aandring en sodanige persoon aansê om die registrasiesertifikaat en die hond ten opsigte waarvan die registrasiesertifikaat uitgereik is, vir inspeksie toon of te laat toon;

(c) enige persoon met betrekking tot enige aangeleentheid wat by so 'n doel ter sake is, ondervra.

(3) Die persoon in beheer van enige grond of perseel tentyde van 'n besoek van 'n gemagtige beampte wat homself behoorlik kan identifiseer, moet, op versoek van die beampte, die beampte toelaat om sodanige perseel te betree en om sy bevoegdhede en pligte ingevolge hierdie regulasies op daardie perseel uit te oefen en te vervul.

(4) 'n Gemagtigde beampte kan, by die uitoefening van 'n bevoegdheid of die vervulling van 'n plig ingevolge hierdie regulasies, vergesel wees deur iemand om hom as tolk of op enige ander wyse te help, en sodanige persoon word, onderwyl hy in opdrag van die gemagtigde beampte optree, geag 'n gemagtigde beampte te wees.

DIE SKUT VAN HONDE

10. (1) Enige gemagtigde beampte of enige ander persoon kan 'n hond wat losloop en skynbaar sonder eienaar is, of wat aangehou word in strid met enige bepaling van hierdie regulasies, skut in 'n skut van die Raad of in 'n plek wat deur die Raad as skut aangewys is, totdat die persoon wat sodanige hond opeis, 'n registrasiesertifikaat daarvoor aan die skutmeester of persoon in beheer van die plek waar die hond geskut is, getoon het en die gelde by regulasie 13 voorgeskryf, betaal het.

(2) Waar daar op of aan die halsband van 'n hond wat geskut is, die naam en adres van 'n persoon verskyn, tree die skutmeester of persoon in beheer van die plek waar die hond geskut is, onmiddellik met die betrokke persoon in verbinding en 'n skriftelike mededeling, gepos aan die adres wat op of aan die halsband verskyn, word as voldoende mededeling geag vir doeleindes van hierdie regulasie.

(3) Niemand mag enige hond wat wettig geskut is, vrysit of probeer vrysit uit die bewaring van die persoon in beheer van die skut of plek nie

REGISTER VAN HONDE WAT GESKUT IS

11. Die Raad hou 'n register wat die datum toon waarop elke hond geskut, verkoop of van kant gemaak is, en in die geval van verkoping, die bedrag verkry, welke bedrag aan die Raad toeval.

ONOPGEËISTE HONDE KAN VERKOOP OF VAN KANT GEMAAK WORD

12. (1) Ingeval 'n hond nie binne 'n tydperk van 96 uur na 12h00 van die dag waarop die hond geskut is, deur iemand wat daarop geregtig is, opgeëis word nie, kan 'n gemagtigde beampte die hond laat verkoop of van kant laat maak.

(2) Die Raad is nie aanspreeklik vir skadevergoeding aan enige persoon wat op die hond aanspraak maak ten aansien van enige handeling ingevolge hierdie regulsies nie.

(b) demand the name and address of any person who is the owner of a dog or who is apparently in control of a dog, and require such person to produce or cause to be produced for inspection the registration certificate and the dog in respect of which the registration certificate was issued;

(c) question any person in respect of any matter relevant to any such purpose.

(3) The person in control of any land or premises shall, at the time of the visit of any authorised officer who is able duly to identify himself, upon request of the officer, permit him to enter upon such premises and to exercise his powers and to carry out his duties in terms of these regulations on such premises.

(4) An authorised officer may, in the exercise of a power or the carrying out of a duty under these regulations, be accompanied by a person to assist him as an interpreter or in any other manner and such person shall, while acting under the direction of such authorised officer, be deemed to be an authorised officer.

IMPOUNDING OF DOGS

10. (1) Any authorised officer or any other person may impound any dog which is at large and apparently ownerless, or which is being kept in contravention of any provision of these regulations, in a pound belonging to the Council, or any place designated by the Council as a pound, until the person claiming such dog shall have produced to the poundmaster or person in control of the place where the dog is impounded, a registration certificate in respect thereof, and paid the fees prescribed by regulation 13.

(2) Where there appears on the collar of any dog impounded the name and address of a person, the poundmaster or person in control of the place where the dog is impounded shall immediately communicate with such person and a written communication, posted to the address shown on the collar, shall be deemed sufficient communication for the purposes of this regulation.

(3) No person shall rescue or attempt to rescue any dog lawfully impounded from the custody of the person in charge of the pound of place.

REGISTER OF DOGS IMPOUNDED

11. The Council shall keep a register showing the date on which every dog was impounded, sold or destroyed and, in the case of a sale, the amount realised, which amount shall accrue to the Council.

UNCLAIMED DOGS MAY BE SOLD OR DESTROYED

12. (1) In the event of any dog not being claimed by any person entitled thereto within a period of 96 hours after 12h00 of the day the dog was impounded, an authorised officer may cause the dog to be sold or to be destroyed.

(2) The Council shall not be liable for any compensation to any person entitled to the dog in respect of any action taken in terms of these regulations.

SKUT- EN VERWYDERINGSGELDE

13. Die gelde betaalbaar indien 'n hond ingevolge hierdie regulasies geskut is, is soos volg:

(a) R1 per dag of gedeelte van 'n dag per hond skutgeld; en

(b) R5 vir die vang van sodanige hond en die vervoer daarvan na die skut.

DIE VAN KANT MAAK VAN HONDE

14. (1) Die Raad of sy gemagtigde beampte kan, behoudens die bepalings van regulasies 10 en 12, gelas dat 'n hond van kant gemaak word—

(a) indien dit blyk dat sodanige hond beantwoord aan die beskrywing in regulasie 15 (1), en die persoon wat daarop aanspraak maak, dit nie ingevolge regulasie 15 (3) kan terugkry nie;

(b) indien sodanige hond op 'n openbare plek losloop en skynbaar sonder eienaar is of nie opgeëis word nie; en

(c) indien sodanige hond op 'n openbare plek losloop en die eienaar of persoon wat oor die hond toesig het, weier of in gebreke bly om die heffing wat ingevolge hierdie regulasies ten opsigte van sodanige hond verskuldig is, te betaal.

KWAAI HONDE EN LOOPSE TEWE

15. (1) Niemand mag toelaat dat enige hond wat—

(a) wild of gevaarlik is of kwaai voorkom;

(b) in die gewoonte geraak het om af te storm op enige voertuie, diere, pluimvee, duiwe of persone buite enige perseel waar die hond aangehou word;

(c) persone beseer of skade aan eiendom aanrig; of

(d) 'n loopse teef is;

op 'n openbare plek kom nie of gebring word nie.

(2) Enige gemagtigde beampte kan sodanige hond skut of laat skut.

(3) Niemand wat aanspraak maak op 'n hond wat aldus geskut is, kry dit terug nie, tensy die skutgelde betaal is.

HONDE WAT STEURNIS VEROORSAAK

16. (1) Niemand mag 'n hond aanhou wat—

(a) deur aanhoudend of te veel te blaf, te tjank of te huil, 'n steurnis of oorlas veroorsaak nie;

(b) aan 'n aansteeklike siekte ly nie: Met dien verstande dat hierdie bepaling nie belet dat so 'n hond in 'n kliniek by 'n veearts vir behandeling gehuisves word nie.

(2) Indien 'n gemagtigde beampte van mening is dat 'n hond 'n hond is soos bedoel in subregulasie (1), kan hy die eienaar van sodanige hond skriftelik opdrag gee om die hond uit die raadsgebied te verwyder en moet die eienaar sodanige hond binne 96 uur, bereken vanaf 12h00 op die dag waarop sodanige kennisgewing aan hom beteken is, aldus verwyder, en indien die eienaar nalaat om die opdrag uit te voer, kan die gemagtigde beampte die hond skut en ooreenkomstig regulasies 12 en 13 daarmee handel.

(3) Die Raad is nie aanspreeklik vir betaling van skadevergoeding aan enige persoon wat op 'n hond bedoel in subregulasie (1), aanspraak maak, ten opsigte van enige handeling ingevolge hierdie regulasie nie.

POUND AND REMOVAL FEES

13. The moneys payable if a dog is impounded in terms of these regulations shall be as follows:

(a) R1 per day or portion of a day per dog, in pound fees; and

(b) R5 for catching such dog and transporting it to the pound.

DESTRUCTION OF DOGS

14. (1) The Council or its authorised officer may, subject to the provisions of sections 10 and 12, order the destruction of any dog—

(a) where it appears that such dog is of the type described in regulation 15 (1) and that the person claiming such dog is not entitled to its return in terms of regulation 15 (3);

(b) where such dog is at large in any public place and appears to be ownerless or is unclaimed; and

(c) where such dog is at large in a public place and the owner or person having custody thereof refuses or fails to pay the levy due in terms of these regulations in respect of such dog.

VICIOUS DOGS AND BITCHES ON HEAT

15. (1) No person shall permit any dog that—

(a) is wild or vicious, or appears to be so;

(b) has acquired the habit of charging any vehicles, animals, poultry, pigeons or persons outside any premises where it is kept;

(c) causes damage to persons or property; or

(d) is a bitch on heat;

to be in a public place, or bring it into such place.

(2) Any authorised officer may impound any such dog or have it impounded.

(3) No person claiming any dog so impounded shall have it returned, unless and until the pound fees have been paid.

DOGS CAUSING NUISANCE

16. (1) No person shall keep a dog that—

(a) creates a disturbance or a nuisance by constant or excessive barking, howling or whining;

(b) suffers from a contagious disease: Provided that this provision does not prohibit that such dog be kept in a veterinary surgeon's clinic for treatment.

(2) In the event of an authorised officer being of the opinion that a dog is a dog contemplated in subregulation (1), he may order the owner of such dog in writing to remove such dog from the area of the Council and the owner shall thus remove such dog within 96 hours of 12h00 on the day when such notice was served and if the owner of such dog fails to comply with such written order the authorised officer may impound the dog and deal with it in terms of regulations 12 and 13.

(3) The Council shall not be liable to pay any compensation to any person who lays claim to any dog contemplated in subregulation (1) in respect of any action in terms of these regulations.

University of Fort Hare
Together in Excellence

HOND MOET AAN LEIBAND VAS WEES

17. (1) Niemand mag toelaat dat enige hond op straat of in 'n openbare plek losloop nie, en 'n hond moet aan 'n leiband of ketting en onder beheer gehou word.

(2) 'n Gemagtigde beampte kan 'n hond wat nie aan 'n leiband of ketting vas is nie, skut, en met sodanige hond word gehandel ooreenkomstig regulasie 10 of 12 van hierdie regulasies.

HONDE MAG NIE AANGEHITS WORD NIE

18. Niemand mag sonder redelike gronde—

(a) 'n hond teen 'n persoon of dier aanhits nie; of

(b) toelaat dat 'n hond onder sy toesig of in sy besit 'n persoon of dier aanval of die skrik op die lyf jaag nie.

VORMS

19. Die Raad of iemand deur hom daartoe gemagtig, skryf enige vorm voor wat nodig is vir die behoorlike toepassing van hierdie regulasies.

VERMOEDENS

20. Indien daar kragtens hierdie regulasies geregtelike stappe teen iemand gedoen word op grond daarvan dat hy—

(a) 'n hond ouer as twee maande aanhou sonder dat dit geregistreer is;

(b) 'n hond ouer as ses maande aanhou sonder dat hy die heffing ten opsigte van die hond betaal het; of

(c) 'n teef aanhou wat nie gesteriliseer is nie;

word sodanige hond geag reeds twee of ses maande, na gelang van die geval, oud te wees of ouer, of geag nie gesteriliseer te wees nie, tensy en tot tyd en wyl die teendeel bewys is.

MISDRYWE EN STRAWWE

21. (1) Enige persoon wat—

(a) enige bepaling van hierdie regulasies oortree;

(b) enige verklaring met betrekking tot die eienaarskap of die registrasie van 'n hond aan 'n gemagtigde beampte doen wat in enige belangrike opsig vals is, wetende dat dit vals is;

(c) weier of in gebreke bly om op enige vraag wat 'n gemagtigde beampte, in die uitoefening van sy bevoegdhede of vervulling van sy pligte ingevolge hierdie regulasies, aan hom gestel het, na sy beste vermoë te antwoord;

(d) weier of in gebreke bly om na sy beste vermoë te voldoen aan enige vereiste deur 'n gemagtigde beampte in die uitoefening van sy genoemde bevoegdhede of die vervulling van sy pligte gestel;

(e) hom verset teen enige gemagtigde beampte of so 'n beampte hinder of belemmer in die uitvoering van enigeen van die bevoegdhede of die vervulling van enigeen van die pligte wat aan hom verleen of opgedra is by hierdie regulasies;

(f) valslik voorgee dat hy 'n gemagtigde beampte is;

(g) 'n dokument namaak met die doel om sodanige dokument uit te gee as 'n registrasiesertifikaat wat kragtens hierdie regulasies uitgereik is;

DOGS TO BE ON LEAD

17. (1) No person shall permit any dog to be at large in a street or public place and shall keep any dog on a leash or chain and under control.

(2) Any authorised officer may impound a dog which is not kept on a leash or chain and such dog shall be dealt with in accordance with regulation 10 or 12 of these regulations.

DOGS NOT TO BE URGED TO ATTACK

18. No person shall, without reasonable cause—

(a) set any dog on any person or animal;

(b) permit any dog in his custody or possession to attack or terrify any person or animal.

FORMS

19. The Council or any person authorised to do so by it shall prescribe any form which may be necessary for the proper execution of these regulations.

PRESUMPTION

20. In any proceedings instituted in terms of these regulations against any person on the grounds that—

(a) he is keeping a dog older than two months without it having been registered;

(b) he is keeping a dog older than six months without having paid the levy in respect of the dog; or

(c) he is keeping an unspayed bitch;

such dog shall be deemed to be two or six months of age or older or to be unspayed, until and unless the contrary is proved.

OFFENCES AND PENALTIES

21. (1) Any person who—

(a) contravenes any of the provisions of these regulations;

(b) makes any statement in respect of the ownership or the registration of a dog to any authorised officer which is false in any material particular knowing the same to be false;

(c) refuses or fails to answer to the best of his ability any question which an authorised officer has put to him in the execution of his powers or duties in terms of these regulations;

(d) refuses or fails to comply to the best of his ability with any requirement of an authorised officer in the execution of his said powers or duties;

(e) resists or hinders or obstructs any authorised officer in the execution of any of the powers or duties conferred or imposed upon him by these regulations;

(f) falsely represents himself to be an authorised officer;

(g) fabricates any document with intent to utter such document as a registration certificate issued in terms of these regulations;

University of Fort Hare
Together in Excellence

(h) 'n nagemaakte dokument gebruik of in omloop bring wat as 'n registrasiesertifikaat uitgegee kan word; of

(i) 'n registrasiesertifikaat wat aan iemand anders kragtens hierdie regulasies uitgereik is, steel of in besit daarvan gevind word sonder dat hy bevredigende rekenskap kan gee van hoe dit in sy besit gekom het;

begaan 'n misdryf, en is by skuldigbevinding strafbaar met 'n boete van hoogstens R50, of, by wanbetaling, met gevangenisstraf vir 'n tydperk van hoogstens drie maande.

(2) 'n Hof wat iemand skuldig bevind dat hy 'n hond aanhou sonder dat dit behoorlik geregistreer is of onder beheer gehou word, ooreenkomstig die bepalings van hierdie regulasies, kan, benewens die straf bedoel in subregulasie (1), beveel dat die betrokke hond van kant gemaak word, en daarna kan 'n gemagtigde beampte sodanige hond van kant maak.

(h) uses or circulates any fabricated document which may be uttered as a registration certificate; or

(i) steals or is found to be in possession of a registration certificate, issued to someone else in terms of these regulations, without being able to account satisfactorily for possession thereof;

shall commit an offence and shall on conviction be liable to a fine not exceeding R50 or, in default of payment, to imprisonment for a period not exceeding three months.

(2) Any Court convicting any person of keeping any dog without it having been properly registered or kept under control in accordance with the provisions of these regulations may, in addition to the penalty referred to in subregulation (1), order the destruction of the dog concerned and, thereupon, an authorised officer may destroy such dog.

No. R. 1751 22 Augustus 1980

REGULASIES BETREFFENDE DIE BEHEER OOR DIE AANHOU VAN HONDE BINNE DIE REGSGEBIED VAN DIE GEMEENSKAPSRAAD VAN GERMISTON (KATLEHONG)

Ek, George de Villiers Morrison, Adjunk-minister van Samewerking, namens en in opdrag van die Minister van Samewerking en Ontwikkeling, kragtens die bevoegdheid hom verleen by artikel 11 (1) (fA) van die Wet op Gemeenskapsrade, 1977 (Wet 125 van 1977), maak hierby bekend dat die regulasies in die bygaande Bylae vervat, kragtens 'n besluit deur die Gemeenskapsraad van Germiston ingevolge artikel 5 (1) (a) (vii) van genoemde Wet geneem, met ingang van die datum van hierdie kennisgewing, op die regsgebied van daardie Raad van toepassing is.

G. DE V. MORRISON, Adjunk-minister van Samewerking.

(Lêer A2/14/4/G6)

BYLAE

WOORDOMSKRYWING

1. In hierdie regulasies, tensy uit die samehang anders blyk, beteken—

"eienaar", met betrekking tot 'n hond, iemand wat 'n hond aanhou, en sluit dit enige persoon in aan wie 'n hond toevertrou is of wat beheer oor 'n hond het, asook die persoon aan wie 'n perseel- of woonpermit uitgereik is ingevolge die regulasies gepubliseer by Goewermentskennisgewing R. 1036 van 1968, ten opsigte van enige perseel binne die raadsgebied waar enige hond aangehou word of toegelaat word om te lewe of te bly, tensy sodanige persoon in staat is om te bewys dat hy nie die eienaar van daardie hond is nie en dat die hond sonder sy goedkeuring of wete toegelaat is om op sodanige perseel aangehou te word of te lewe of te bly;

"gemagtigde beampte" enige persoon deur die Raad kragtens hierdie regulasies aangestel om die bevoegdhede en pligte ingevolge hierdie regulasies aan hom verleen of opgelê, uit te oefen of te vervul;

No. R. 1751 22 August 1980

REGULATIONS ON THE CONTROL OF THE KEEPING OF DOGS WITHIN THE AREA OF JURISDICTION OF THE COMMUNITY COUNCIL OF GERMISTON (KATLEHONG)

I, George de Villiers Morrison, Deputy Minister of Co-operation, on behalf of and by direction of the Minister of Co-operation and Development, by virtue of the powers vested in him by section 11 (1) (fA) of the Community Councils Act, 1977 (Act 125 of 1977), hereby announce that the regulations contained in the accompanying Schedule are, by virtue of a decision taken by the Community Council of Germiston in terms of section 5 (1) (a) (vii) of the said Act, applicable to the area of jurisdiction of that Council as from the date of this notice.

G. DE V. MORRISON, Deputy Minister of Co-operation.

(File A2/14/4/G6)

SCHEDULE

DEFINITIONS

1. In these regulations, unless the context otherwise indicates—

"area of the Council" means the urban residential area for which the Council was established;

"authorised officer" means any person appointed by the Council in terms of these regulations to exercise the powers or perform the functions granted or imposed on him in terms of these regulations;

"Council" means the Germiston Community Council established by Government Notice R. 125 of 1979;

"dog" means both a dog and a bitch;

"levy" means the levy imposed in terms of regulation 6;

"officer of the Council" means any office of the Council;

"owner" in relation to a dog means any person who keeps a dog and includes any person to whom a dog has been entrusted or who has control of a dog, and also the person to whom a site or residential permit has been issued in terms of the regulations

"gesteriliseerde teef" 'n teef ten opsigte waarvan 'n veearts, geregistreer kragtens die Veeartswet, 1933 (Wet 16 van 1933), 'n sertifikaat uitgereik het ten effekte dat sodanige teef gesteriliseer is;

"heffing" die heffing ingevolge regulasie 6 gehef;

"hond" 'n reun sowel as 'n teef;

"jaar" or "jaarliks" onderskeidelik 'n tydperk of betreffende 'n tydperk van 12 maande wat op 31 Desember eindig;

"openbare plek" enige pad, straat, deurgang, brug, duikweg, sypaadjie, oop veld, tuin, park, omheinde gebied of gebou binne die raadsgebied wat vir die publiek toeganklik is;

"Raad" die Germistonse Gemeenskapsraad, ingestel by Goewermentskennisgewing R. 125 van 1979;

"raadsgebied" die stedelike woongebied waarvoor die Raad ingestel is;

"raadskantoor" enige kantoor van die Raad;

"verwyderingsgelde" die gelde wat betaalbaar is wanneer 'n hond ingevolge die bepalings van hierdie regulasies deur 'n gemagtigde beampte of ander persoon gevang en vervoer is na die skut.

VEREISTES VIR AANHOU VAN HONDE

2. Niemand mag binne die raadsgebied 'n hond wat twee maande oud of ouer is, aanhou nie, tensy hy sodanige hond by die raadskantoor laat registreer het en, op die wyse hierin bepaal, die voorgeskrewe heffing (indien van toepassing) ten opsigte van die hond betaal het.

PERSOON VIR HEFFING AANSPREEKLIK

3. By die toepassing van hierdie regulasies is die eienaar verantwoordelik vir die registrasie van die hond en die betaling van die heffing, en word die persoon onder wie se sorg of toesig of in wie se besit of binne wie se huis of op wie se perseel 'n hond gevind of gesien word, geag die eienaar te wees, tensy hy die teendeel bewys.

REGISTRASIE VAN HONDE

4. (1) Die eienaar doen aansoek om die registrasie van 'n hond binne 30 dae ná die inwerkingtreding van hierdie regulasies of, indien sodanige hond dan nog nie in sy besit of onder sy beheer gekom het nie, binne 30 dae nadat daardie hond in sy besit of onder sy beheer gekom het, en daarna voor of op 31 Januarie van elke daaropvolgende jaar.

(2) Die registrasie van 'n hond word jaarliks gedoen en bly geldig tot en met 31 Desember van die jaar waarin dit gedoen is.

REGISTRASIESERTIFIKAAT

5. (1) 'n Registrasiesertifikaat word op die naam van die eienaar van 'n hond teen betaling van die heffing bedoel in regulasie 6, behoudens die bepalings van regulasie 7, op aansoek uitgereik.

(2) Die eienaar van enige hond ten opsigte waarvan 'n registrasiesertifikaat uitgereik is, bewaar die sertifikaat te alle tye gedurende die geldigheidsduur daarvan en toon dit op aanvraag van 'n gemagtigde beampte aan hom.

published under Government Notice R. 1036 of 1968 in respect of any site within the area of the Council where any dog is kept or is permitted to live or remain, unless such person is able to prove that he is not the owner of such dog and that the dog was kept or allowed to live or remain on such site without his knowledge or consent;

"public place" means any road, street, thoroughfare, bridge, subway, sidewalk, open field, garden, park, fenced area or building within the area of the Council which is accessible to the public;

"removal fees" means the fees payable when a dog is caught and transported to the pound by an authorised officer or any other person in terms of the provisions of these regulations;

"spayed bitch" means a bitch in respect of which a veterinarian, registered under the Veterinary Act, 1933 (Act 16 of 1933), has issued a certificate to the effect that such bitch has been spayed;

"year" or "yearly" means or refers to, respectively, a period of 12 months ending on 31 December.

REQUIREMENTS FOR THE KEEPING OF DOGS

2. No person shall, within the area of the Council, keep a dog that is two months old or older, unless he has caused such dog to be registered at the office of the Council and, in the manner hereinafter provided, has paid the prescribed levy (if any) in respect of the dog.

PERSON LIABLE FOR LEVY

3. For the purposes of these regulations the owner shall be responsible for the registration of the dog and the payment of the levy and any person in whose custody, charge or possession, or within whose house or on whose premises any dog is found or seen, shall be deemed to be the owner, until he shall have proved the contrary.

REGISTRATION OF DOGS

4. (1) The owner shall apply for the registration of a dog within 30 days of the commencement of these regulations or, if such dog has then not yet come into his possession or under his control, within 30 days after the dog has came into his possession or under his control, and thereafter on or before 31 January of every ensuing year.

(2) The registration of a dog shall be carried out annually and shall remain valid up to and including 31 December of the year during which it was carried out.

REGISTRATION CERTIFICATE

5. (1) Any registration certificate shall be issued in the name of the owner of a dog on payment of the levy referred to in regulation 6, subject to the provisions of regulation 7, on application.

(2) The owner of any dog in respect of which a registration certificate has been issued shall preserve the certificate at all times for the period of validity thereof and shall produce it to any authorised officer on demand.

Together in Excellence

(3) Geen registrasiesertifikaat kan van een persoon aan 'n ander persoon oorgedra word nie.

(4) Indien 'n registrasiesertifikaat verlore raak of vernietig word, kan 'n duplikaat daarvan teen betaling van 50c aan die voormalige houer daarvan uitgereik word.

HEFFINGS

6. By registrasie van 'n hond betaal die eienaar, behoudens die bepalings van hierdie regulasies, die jaarlikse heffing ten opsigte van elke hond wat hy binne die raadsgebied aanhou, teen onderstaande tarief:

(a) Vir die eerste reun of gesteriliseerde teef: R2.

(b) Vir 'n tweede of verdere hond van die tipe in paragraaf (a) bedoel: R10.

(c) Vir 'n ongesteriliseerde teef: R10.

(d) Vir 'n tweede of verdere hond van die tipe in paragraaf (c) bedoel: R15.

VRYSTELLING VAN DIE BETALING VAN HEFFINGS

7. (1) Geen heffing is betaalbaar nie ten opsigte van 'n hond—

(a) wat deur 'n blinde persoon as gids gebruik word;

(b) wat deur 'n persoon aangehou word indien daardie persoon 'n gepensioeneerde is wat weens hoë ouderdom of liggaamlike gebrek nie in staat is om 'n eie inkomste te verdien nie;

(c) wat jonger as ses maande is; of

(d) wat in die besit of bewaring is van die Dierebeskermingsvereniging of 'n ander soortgelyke liggaam deur die Raad goedgekeur.

(2) Die vrystelling bedoel in subregulasie (1) (a), (b) of (c), onthef nie die eienaar van die hond daarvan om aansoek te doen om die registrasie van die betrokke hond nie.

(3) 'n Registrasiesertifikaat word gratis aan die eienaar van 'n hond bedoel in subregulasie (1) (a), (b) of (c), uitgereik, met vermelding op sodanige sertifikaat van die rede van vrystelling: Met dien verstande dat die eienaar van 'n hond bedoel in subregulasie (1) (a) of (b), elke jaar om 'n gratis registrasiesertifikaat aansoek moet doen en die nodige bewys moet lewer dat hy op vrystelling van die betaling van die heffing geregtig is.

BEPERKING OP DIE AANHOU VAN HONDE

8. (1) Tensy die Raad in enige bepaalde geval anders bepaal, word daar op geen enkele perseel meer as een hond aangehou nie: Met dien verstande dat hierdie bepaling nie betrekking het op 'n teef se werpsel as sodanige werpsel jonger as twee maande oud is nie.

(2) 'n Perseel waarop honde aangehou word, moet só omhein wees dat die honde in die erf gehou kan word, en die heining moet behoorlik in stand gehou word.

(3) No registration certificate shall be transferable from one person to any other person.

(4) If any registration certificate is lost or destroyed, a duplicate thereof may be issued to the former holder thereof on payment of 50c.

LEVIES

6. Upon registration of a dog the owner shall pay, subject to the provisions of these regulations, the annual levy in respect of every dog which is kept by him within the area of the Council, at the following rate:

(a) For the first dog or spayed bitch: R2.

(b) For a second or additional dog of the kind contemplated in paragraph (a): R10.

(c) For any unspayed bitch: R10.

(d) For any second or additional dog of the kind contemplated in paragraph (c): R15.

EXEMPTION FROM PAYMENT OF LEVIES

7. (1) No levy shall be payable in respect of any dog—

(a) which is used by a blind person as a guide;

(b) which is kept by a person if such person is a pensioner who, due to old age or disability, is unable to earn an income of his own;

(c) which is younger than six months; or

(d) which is in the possession or under the control of the Society for the Prevention of Cruelty to Animals or any similar body approved by the Council.

(2) The exemption referred to in subregulation (1) (a), (b) or (c) shall not exempt the owner of the dog from applying for the registration of the dog concerned.

(3) A registration certificate shall be issued free of charge to the owner of a dog referred to in subregulation (1) (a), (b) or (c) with a mention on such certificate of the reason for the exemption: Provided that the owner of a dog contemplated in subregulation 1 (a) or (b) shall be required to apply every year for a free registration certificate, submitting the necessary proof that he is entitled to be exempted from the payment of the levy.

RESTRICTION ON THE KEEPING OF DOGS

8. (1) Unless the Council in any particular case determines otherwise, not more than one dog may be kept on any single site: Provided that this provision shall not apply to the litter of a bitch when such litter is younger than two months.

(2) Any site where dogs are kept shall be fenced in such a way that the dogs can be kept within the site and the fence shall be kept in good repair.

University of Pretoria
Excellence

GEMAGTIGDE BEAMPTES

9. (1) Die Raad kan een of meer persone as gemagtigde beamptes aanstel.

(2) 'n Gemagtigde beampte kan, met die doel om vas te stel of aan die bepalings van hierdie regulasie voldoen word—

(a) op alle redelike tye enige grond of perseel betree;

(b) op die naam en adres van enige persoon wat die eienaar van 'n hond is of wat oënskynlik in beheer van 'n hond is, aandring en sodanige persoon aansê om die registrasiesertifikaat en die hond ten opsigte waarvan die registrasiesertifikaat uitgereik is, vir inspeksie toon of te laat toon;

(c) enige persoon met betrekking tot enige aangeleentheid wat by so 'n doel ter sake is, ondervra.

(3) Die persoon in beheer van enige grond of perseel ten tyde van 'n besoek van 'n gemagtigde beampte wat homself behoorlik kan identifiseer, moet, op versoek van die beampte, die beampte toelaat om sodanige perseel te betree en om sy bevoegdhede en pligte ingevolge hierdie regulasies op daardie perseel uit te oefen en te vervul.

(4) 'n Gemagtigde beampte kan, by die uitoefening van 'n bevoegdheid of die vervulling van 'n plig ingevolge hierdie regulasies, vergesel wees deur iemand om hom as tolk of op enige ander wyse te help, en sodanige persoon word, onderwyl hy in opdrag van die gemagtigde beampte optree, geag 'n gemagtigde beampte te wees.

DIE SKUT VAN HONDE

10. (1) Enige gemagtigde beampte of enige ander persoon kan 'n hond wat losloop en skynbaar sonder eienaar is, of wat aangehou word in stryd met enige bepaling van hierdie regulasies, skut in 'n skut van die Raad of in 'n plek wat deur die Raad as skut aangewys is, totdat die persoon wat sodanige hond opeis, 'n registrasiesertifikaat daarvoor aan die skutmeester of persoon in beheer van die plek waar die hond geskut is, getoon het en die gelde by regulasie 13 voorgeskryf, betaal het.

(2) Waar daar op of aan die halsband van 'n hond wat geskut is, die naam en adres van 'n persoon verskyn, tree die skutmeester of persoon in beheer van die plek waar die hond geskut is, onmiddellik met die betrokke persoon in verbinding en 'n skriftelike mededeling, gepos aan die adres wat op of aan die halsband verskyn, word as voldoende mededeling geag vir doeleindes van hierdie regulasie.

(3) Niemand mag enige hond wat wettig geskut is, vrysit of probeer vrysit uit die bewaring van die persoon in beheer van die skut of plek nie.

REGISTER VAN HONDE WAT GESKUT IS

11. Die Raad hou 'n register wat die datum toon waarop elke hond geskut, verkoop of van kant gemaak is, en in die geval van verkoping, die bedrag verkry, welke bedrag aan die Raad toeval.

AUTHORISED OFFICERS

9. (1) The Council may appoint one or more persons as authorised officers.

(2) An authorised officer may, for the purpose of ascertaining whether the provisions of these regulations are being complied with—

(a) at all reasonable times enter upon any land or premises;

(b) demand the name and address of any person who is the owner of a dog or who is apparantly in control of a dog, and require such person to produce or cause to be produced for inspection the registration certificate and the dog in respect of which the registration certificate was issued;

(c) question any person in respect of any matter relevant to any such purpose.

(3) The person in control of any land or premises shall, at the time of the visit of any authorised officer who is able duly to identify himself, upon request of the officer, permit him to enter upon such premises and to exercise his powers and to carry out his duties in terms of these regulations on such premises.

(4) An authorised officer may, in the exercise of a power or the carrying out of a duty under these regulations, be accompanied by a person to assist him as an interpreter or in any other manner and such person shall, while acting under the direction of such authorised officer, be deemed to be an authorised officer.

Rhodes University Library Port Hare
Together in Excellence

IMPOUNDING OF DOGS

10. (1) Any authorised officer or any other person may impound any dog which is at large and apparantly ownerless, or which is being kept in contravention of any provision of these regulations, in a pound belonging to the Council, or any place designated by the Council as a pound, until the person claiming such dog shall have produced to the poundmaster or person in control of the place where the dog is impounded, a registration certificate in respect thereof, and paid the fees prescribed by regulation 13.

(2) Where there appears on the collar of any dog impounded the name and address of a person, the poundmaster or person in control of the place where the dog is impounded shall immediately communicate with such person and a written communication, posted to the address shown on the collar, shall be deemed sufficient communication for the purposes of this regulation.

(3) No person shall rescue or attempt to rescue any dog lawfully impounded from the custody of the person in charge of the pound or place.

REGISTER OF DOGS IMPOUNDED

11. The Council shall keep a register showing the date on which every dog was impounded, sold or destroyed and, in the case of a sale, the amount realised, which amount shall accrue to the Council.

ONOPGEËISTE HONDE KAN VERKOOP OF VAN KANT GEMAAK WORD

12. (1) Ingeval 'n hond nie binne 'n tydperk van 96 uur na 12h00 van die dag waarop die hond geskut is, deur iemand wat daarop geregtig is, opgeëis word nie, kan 'n gemagtigde beampte die hond laat verkoop of van kant laat maak.

(2) Die Raad is nie aanspreeklik vir skadevergoeding aan enige persoon wat op die hond aanspraak maak ten aansien van enige handeling ingevolge hierdie regulasies nie.

SKUT- EN VERWYDERINGSGELDE

13. Die gelde betaalbaar indien 'n hond ingevolge hierdie regulasies geskut is, is soos volg:

(a) R1 per dag of gedeelte van 'n dag per hond skutgeld; en

(b) R5 vir die vang van sodanige hond en die vervoer daarvan na die skut.

DIE VAN KANT MAAK VAN HONDE

14. (1) Die Raad of sy gemagtigde beampte kan, behoudens die bepalings van regulasies 10 en 12, gelas dat 'n hond van kant gemaak word—

(a) indien dit blyk dat sodanige hond beantwoord aan die beskrywing in regulasie 15 (1), en die persoon wat daarop aanspraak maak, dit nie ingevolge regulasie 15 (3) kan terugkry nie;

(b) indien sodanige hond op 'n openbare plek losloop en skynbaar sonder eienaar is of nie opgeëis word nie; en

(c) indien sodanige hond op 'n openbare plek losloop en die eienaar of persoon wat oor die hond toesig het, weier of in gebreke bly om die heffing wat ingevolge hierdie regulasies ten opsigte van sodanige hond verskuldig is, te betaal.

KWAAI HONDE EN LOOPSE TEWE

15. (1) Niemand mag toelaat dat enige hond wat—

(a) wild of gevaarlik is of kwaai voorkom;

(b) in die gewoonte geraak het om af te storm op enige voertuie, diere, pluimvee, duiwe of persone buite enige perseel waar die hond aangehou word;

(c) persone beseer of skade aan eiendom aanrig;

of

(d) 'n loopse teef is;

op 'n openbare plek kom nie of gebring word nie.

(2) Enige gemagtigde beampte kan sodanige hond skut of laat skut.

(3) Niemand wat aanspraak maak op 'n hond wat aldus geskut is, kry dit terug nie, tensy die skutgelde betaal is.

HONDE WAT STEURNIS VEROORSAAK

16. (1) Niemand mag 'n hond aanhou wat—

(a) deur aanhoudend of te veel te blaf, te tjank of te huil, 'n steurnis of oorlas veroorsaak nie;

(b) aan 'n aansteeklike siekte ly nie; met dien verstande dat hierdie bepaling nie belet dat so 'n hond in 'n kliniek by 'n veearts vir behandeling gehuisves word nie.

UNCLAIMED DOGS MAY BE SOLD OR DESTROYED

12. (1) In the event of any dog not being claimed by any person entitled thereto within a period of 96 hours after 12h00 of the day the dog was impounded, an authorised officer may cause the dog to be sold or to be destroyed.

(2) The Council shall not be liable for any compensation to any person entitled to the dog in respect of any action taken in terms of these regulations.

POUND AND REMOVAL FEES

13. The moneys payable if a dog is impounded in terms of these regulations shall be as follows:

(a) R1 per day or portion of a day per dog, in pound fees; and

(b) R5 for catching such dog and transporting it to the pound.

DESTRUCTION OF DOGS

14. (1) The Council or its authorised officer may, subject to the provisions of sections 10 and 12, order the destruction of any dog—

(a) where it appears that such dog is of the type described in regulation 15 (1) and that the person claiming such dog is not entitled to its return in terms of regulation 15 (3);

(b) where such dog is at large in any public place and appears to be ownerless or is unclaimed; and

(c) where such dog is at large in a public place and the owner or person having custody thereof refuses or fails to pay the levy due in terms of these regulations in respect of such dog.

VICIOUS DOGS AND BITCHES ON HEAT

15. (1) No person shall permit any dog that—

(a) is wild or vicious, or appears to be so;

(b) has acquired the habit of charging any vehicles, animals, poultry, pigeons or persons outside any premises where it is kept;

(c) causes damage to persons or property; or

(d) is a bitch on heat;

to be in a public place, or bring it into such place.

(2) Any authorised officer may impound any such dog or have it impounded.

(3) No person claiming any dog so impounded shall have it returned, unless and until the pound fees have been paid.

DOGS CAUSING NUISANCE

16. (1) No person shall keep a dog that—

(a) creates a disturbance or a nuisance by constant or excessive barking, howling or whining;

(b) suffers from a contagious disease: Provided that this provision does not prohibit that such dog be kept in a veterinary surgeon's clinic for treatment.

University of Fort Hare
Together in Excellence

(2) Indien 'n gemagtigde beampte van mening is dat 'n hond 'n hond is soos bedoel in subregulasie (1), kan hy die eienaar van sodanige hond skriftelik opdrag gee om die hond uit die raadsgebied te verwyder en moet die eienaar sodanige hond binne 96 uur, bereken vanaf 12h00 op die dag waarop sodanige kennisgewing aan hom beteken is, aldus verwyder, en indien die eienaar nalaat om die opdrag uit te voer, kan die gemagtigde beampte die hond skut en ooreenkomstig regulasies 12 en 13 daarmee handel.

(3) Die Raad is nie aanspreeklik vir betaling van skadevergoeding aan enige persoon wat op 'n hond bedoel in subregulasie (1), aanspraak maak, ten opsigte van enige handeling ingevolge hierdie regulasie nie.

HOND MOET AAN LEIBAND VAS WEES

17. (1) Niemand mag toelaat dat enige hond op straat of in 'n openbare plek losloop nie, en 'n hond moet aan 'n leiband of ketting en onder beheer gehou word.

(2) 'n Gemagtigde beampte kan 'n hond wat nie aan 'n leiband of ketting vas is nie, skut, en met sodanige hond word gehandel ooreenkomstig regulasie 10 of 12 van hierdie regulasies.

HONDE MAG NIE AANGEHITS WORD NIE

18. Niemand mag sonder redelike gronde—

(a) 'n hond teen 'n persoon of dier aanhits nie; of

(b) toelaat dat 'n hond onder sy toesig of in sy besit 'n persoon of dier aanval of die skrik op die lyf jaag nie.

VORMS

19. Die Raad of iemand deur hom daartoe gemagtig, skryf enige vorm voor wat nodig is vir die behoorlike toepassing van hierdie regulasies.

VERMOEDENS

20. Indien daar kragtens hierdie regulasies geregtelike stappe teen iemand gedoen word op grond daarvan dat hy—

(a) 'n hond ouer as twee maande aanhou sonder dat dit geregistreer is;

(b) 'n hond ouer as ses maande aanhou sonder dat hy die heffing ten opsigte van die hond betaal het; of

(c) 'n teef aanhou wat nie gesteriliseer is nie;

word sodanige hond geag reeds twee of ses maande, na gelang van die geval, oud te wees of ouer, of geag nie gesteriliseer te wees nie, tensy en tot tyd en wyl die teendeel bewys is.

MISDRYWE EN STRAWWE

21. (1) Enige persoon wat—

(a) enige bepaling van hierdie regulasies oortree;

(b) enige verklaring met betrekking tot die eienaarskap of die registrasie van 'n hond aan 'n gemagtigde beampte doen wat in enige belangrike opsig vals is, wetende dat dit vals is;

(c) weier of in gebreke bly om op enige vraag wat 'n gemagtigde beampte, in die uitoefening van sy bevoegdhede of vervulling van sy pligte ingevolge hierdie regulasies, aan hom gestel het, na sy beste vermoë te antwoord;

(2) In the event of an authorised officer being of the opinion that a dog is a dog contemplated in subregulation (1), he may order the owner of such dog in writing to remove such dog from the area of the Council and the owner shall thus remove such dog within 96 hours of 12h00 on the day when such notice was served and if the owner of such dog fails to comply with such written order the authorised officer may impound the dog and deal with it in terms of regulations 12 and 13.

(3) The Council shall not be liable to pay any compensation to any person who lays claaim to any dog contemplated in subregulation (1) in respect of any action in terms of these regulations.

DOGS TO BE ON LEAD

17. (1) No person shall permit any dog to be at large in a street or public place and shall keep any dog on a leash or chain and under control.

(2) Any authorised officer may impound a dog which is not kept on a leash or chain and such dog shall be dealt with in accordance with regulation 10 or 12 of these regulations.

DOGS NOT TO BE URGED TO ATTACK

18. No person shall, without reasonable cause—

(a) set any dog on any person or animal;

(b) permit any dog in his custody or possession to attack or terrify any person or animal.

FORMS

19. The Council or any person authorised to do so by it shall prescribe any form which may be necessary for the proper execution of these regulations.

PRESUMPTION

20. In any proceedings instituted in terms of these regulations against any person on the grounds that—

(a) he is keeping a dog older than two months without it having been registered;

(b) he is keeping a dog older than six months without having paid the levy in respect of the dog;

or

(c) he is keeping an unspayed bitch;

such dog shall be deemed to be two or six months of age or older or to be unspayed, until and unless the contrary is proved.

OFFENCES AND PENALTIES

21. (1) Any person who—

(a) contravenes any of the provisions of these regulations;

(b) makes any statement in respect of the ownership or the registration of a dog to any authorised officer which is false in any material particular knowing the same to be false;

(c) refuses or fails to answer to the best of his ability any question which an authorised officer has put to him in the execution of his powers or duties in terms of these regulations;

University of Pretoria
Together in Excellence

(d) weier of in gebreke bly om na sy beste vermoë te voldoen aan enige vereiste deur 'n gemagtigde beampte in die uitoefening van sy genoemde bevoegdhede of die vervulling van sy pligte gestel;

(e) hom verset teen enige gemagtigde beampte of so 'n beampte hinder of belemmer in die uitvoering van enigeen van die bevoegdhede of die vervulling van enigeen van die pligte wat aan hom verleen of opgedra is by hierdie regulasies;

(f) valslik voorgee dat hy 'n gemagtigde beampte is;

(g) 'n dokument namaak met die doel om sodanige dokument uit te gee as 'n registrasiesertifikaat wat kragtens hierdie regulasies uitgereik is;

(h) 'n nagemaakte dokument gebruik of in omloop bring wat as 'n registrasiesertifikaat uitgegee kan word; of

(i) 'n registrasiesertifikaat wat aan iemand anders kragtens hierdie regulasies uitgereik is, steel of in besit daarvan gevind word sonder dat hy bevredigende rekenskap kan gee van hoe dit in sy besit gekom het;

begaan 'n misdryf, en is by skuldigbevinding strafbaar met 'n boete van hoogstens R50, of, by wanbetaling, met gevangenisstraf vir 'n tydperk van hoogstens drie maande.

(2) 'n Hof wat iemand skuldig bevind dat hy 'n hond aanhou sonder dat dit behoorlik geregistreer is of onder beheer gehou word, ooreenkomstig die bepalings van hierdie regulasies, kan, benewens die straf bedoel in subregulasie (1), beveel dat die betrokke hond van kant gemaak word, en daarna kan 'n gemagtigde beampte sodanige hond van kant maak.

(d) refuses or fails to comply to the best of his ability with any requirement of an authorised officer in the execution of his said powers or duties;

(e) resists or hinders or obstructs any authorised officer in the execution of any of the powers or duties conferred or imposed upon him by these regulations;

(f) falsely represents himself to be an authorised officer;

(g) fabricates any document with intent to utter such document as a registration certificate issued in terms of these regulations;

(h) uses or circulates any fabricated document which may be uttered as a registration certificate; or

(i) steals or is found to be in possession of a registration certificate, issued to someone else in terms of these regulations, without being able to account satisfactorily for possession thereof;

shall commit an offence and shall on conviction be liable to a fine not exceeding R50 or, in default of payment, to imprisonment for a period not exceeding three months.

(2) Any Court convicting any person of keeping any dog without it having been properly registered or kept under control in accordance with the provisions of these regulations may, in addition to the penalty referred to in subregulation (1), order the destruction of the dog concerned and, thereupon, an authorised officer may destroy such dog.

AGROPLANTAE

Hierdie publikasie is 'n voortsetting van die Suid-Afrikaanse Tydskrif vir Landbouwetenskap Jaargang 1 tot 11, 1958 1968 en bevat artikels oor Akkerbou, Ekologie, Graskunde, Genetika, Landbouplantkunde, Landskapbestuur, Onkruidmiddels, Plantfisiologie, Plantproduksie en -tegnologie, Pomologie, Tuinbou, Weiding en Wynbou. Vier dele van die tydskrif word per jaar gepubliseer.

Verdienstelike landboukundige bydraes van oorspronklike wetenskaplike navorsing word vir plasing in hierdie tydskrif verwelkom. Voorskrifte vir die opstel van sulke bydraes is verkrygbaar van die Direkteur, Landbou-inligting, Privaatsak X144, Pretoria, aan wie ook alle navrae in verband met die tydskrif gerig moet word.

Die tydskrif is verkrygbaar van bogenoemde adres teen R1,50 per eksemplaar of R6 per jaar, posvry (Buitelands R1,75 per eksemplaar of R7 per jaar).

Verkoopbelasting moet by binnelandse bestellings ingesluit word.

AGROPLANTAE

This publication is a continuation of the South African Journal of Agricultural Science Vol. 1 to 11, 1958 1968 and deals with Agronomy, Ecology, Agrostology, Genetics, Agricultural Botany, Landscape Management, Herbicides, Plant Physiology, Plant Production and Technology, Pomology, Horticulture, Pasture Science and Viticulture. Four parts of the journal are published annually.

Contributions of scientific merit on agricultural research are invited for publication in this journal. Directions for the preparation of such contributions are obtainable from the Director, Agricultural Information, Private Bag X144, Pretoria, to whom all communications in connection with the journal should be addressed.

The journal is obtainable from the above-mentioned address at R1,50 per copy or R6 per annum, post free (Other countries R1,75 per copy or R7 per annum).

Sales tax must accompany inland orders.

BOTHALIA

Bothalia is 'n medium vir die publikasie van plantkundige artikels oor die flora en plantegroei van Suidelike Afrika. Een of twee dele van die tydskrif word jaarliks gepubliseer.

Die volgende dele is beskikbaar:

Vol. 3 Deel 1 uit druk
2 1937 75c
3 1938 75c
4 1939 75c

Vol. 4 Deel 1 1941 75c
2 1942 75c
3 1948 75c
4 1948 75c

Vol. 5 1950 R3

Vol. 6 Deel 1 1951 R1,50
2 1954 R2,50
3 1956 R2
4 1957 R2

Vol. 7 Deel 1 1958 R2
2 1960 R3
3 1961 R3
4 1962 R3

Vol. 8 Deel 1 1962 R3
2 1964 R3
3 1965 R3
4 1965 R3

Supplement

Vol. 9 Deel 1 1966 R3
2 1967 R3
3 en 4
1969 R6

Vol. 10 Deel 1 1969 R3
2 1971 R3
3 1971 R3
4 1972 R3

Vol. 11 Deel 1 en 2
1973 R6
3 1974 R3
4 1975 R3

Vol. 12 Deel 1 1976 R5
2 1977 R5
3 1978 R7,50

Verkrygbaar van die Direkteur, Afdeling Landbou-inligting, Privaatsak X144, Pretoria.

Verkoopbelasting moet by alle binnelandse bestellings ingesluit word.

BOTHALIA

Bothalia is a medium for the publication of botanical papers dealing with the flora and vegetation of Southern Africa. One or two parts of the journal are published annually.

The following parts are available:

Vol. 3 Part 1 out of print
2 1937 75c
3 1938 75c
4 1939 75c

Vol. 4 Part 1 1941 75c
2 1942 75c
3 1948 75c
4 1948 75c

Vol. 5 1950 R3

Vol. 6 Part 1 1951 R1,50
2 1954 R2,50
3 1956 R2
4 1957 R2

Vol. 7 Part 1 1958 R2
2 1960 R3
3 1961 R3
4 1962 R3

Vol. 8 Part 1 1962 R3
2 1964 R3
3 1965 R3
4 1965 R3

Supplement

Vol. 9 Part 1 1966 R3
2 1967 R3
3 and 4
1969 R6

Vol. 10 Part 1 1969 R3
2 1971 R3
3 1971 R3
4 1972 R3

Vol. 11 Part 1 and 2
1973 R6
3 1974 R3
4 1975 R3

Vol. 12 Part 1 1976 R5
2 1977 R5
3 1978 R7,50

Obtainable from the Director, Division of Agricultural Information, Private Bag X144, Pretoria.

Sales tax must accompany all inland orders.

University of Fort Hare
Together in Excellence

AGROANIMALIA

Hierdie publikasie is 'n voortsetting van die Suid-Afrikaanse Tydskrif vir Landbouwetenskap Jaargang 1 tot 11, 1958–1968 en bevat artikels oor Diereproduksie en -tegnologie, Diereversorging en -ekologie, Fisiologie, Genetika en Teelt, Suiwelkunde en Voeding. Vier dele van die tydskrif word per jaar gepubliseer.

Verdienstelike landboukundige bydraes van oorspronklike wetenskaplike navorsing word vir plasing in hierdie tydskrif verwelkom. Voorskrifte vir die opstel van sulke bydraes is verkrygbaar van die Direkteur, Landbou-inligting, Privaatsak X144, Pretoria, aan wie ook alle navrae in verband met die tydskrif gerig moet word.

Die tydskrif is verkrygbaar van bogenoemde adres teen R1,50 per eksemplaar of R6 per jaar, posvry (Buitelands R1,75 per eksemplaar of R7 per jaar).

Verkoopbelasting moet by alle binnelandse bestellings ingesluit word.

AGROANIMALIA

This publication is a continuation of the South African Journal of Agricultural Science Vol. 1 to 11, 1958–1968 and deals with Animal Production and Technology, Livestock Management and Ecology, Physiology, Genetics and Breeding, Dairy Science and Nutrition. Four parts of the journal are published annually.

Contributions of scientific merit on agricultural research are invited for publication in this journal. Directions for the preparation of such contributions are obtainable from the Director, Agricultural Information, Private Bag X144, Pretoria, to whom all communications in connection with the journal should be addressed.

The journal is obtainable from the above-mentioned address at R1,50 per copy or R6 per annum, post free (Other countries R1,75 per copy or R7 per annum).

Sales tax must accompany all inland orders.

University of Fort Hare
Together in Excellence

INHOUD

No.		Bladsy No.	Staatskoerant No.
	Samewerking en Ontwikkeling, Departement van		
	Goewermentskennisgewings		
R. 1750	Wet op Gemeenskaparade (125/1977): Regulasies: Beheer oor aanhou van honde: Springs	1	7194
R. 1751	do.: do.: Germiston	7	7194

CONTENTS

No.		Page No.	Gazette No.
	Co-operation and Development, Department of		
	Government Notices		
R. 1750	Community Development Act (125/1977): Regulations: Control of keeping of dogs: Springs	1	7194
R. 1751	do.: do.: Germiston	7	7194

7195
University of Fort Hare
Together in Excellence

STAATSKOERANT
VAN DIE REPUBLIEK VAN SUID-AFRIKA

REPUBLIC OF SOUTH AFRICA
GOVERNMENT GAZETTE

PRYS + 1c AVB 20c PRICE + 1c GST
As 'n Nuusblad by die Poskantoor Geregistreer BUITELANDS 30c ABROAD *Registered at the Post Office as a Newspaper*
POSVRY · POST FREE

Vol. 182] PRETORIA, 22 AUGUSTUS / AUGUST 1980 [No. 7195

GOEWERMENTSKENNISGEWINGS

DEPARTEMENT VAN BINNELANDSE SAKE

No. 1788 22 Augustus 1980

ONGEWENSTE PUBLIKASIES OF VOORWERPE

Die Appèlraad oor Publikasies het kragtens artikel 14 (4) van die Wet op Publikasies, 1974, beslis dat die ondergenoemde publikasie of voorwerp binne die bedoeling van artikel 47 (2) van genoemde Wet ongewens is, en het die beslissing van 'n komitee bedoel in artikel 4 van genoemde Wet dat die publikasie of voorwerp nie binne die bedoeling van genoemde artikel 47 (2) ongewens is nie, ter syde gestel:

LYS/LIST P80/45

Inskrywing No. Entry No.	Publikasie of voorwerp Publication or object	Skrywer of voortbringer Author or producer	Artikel 47 (2) Section 47 (2)
P80/7/100.....	*Calendar, The*—July 1980–July 1981 (Kalender/Calendar)	Bill Hart, c/o Thomson Publications (Pty) Ltd	(a)

No. 1793 22 Augustus 1980

ONGEWENSTE PUBLIKASIES OF VOORWERPE.—REGSTELLING

In *Staatskoerant* 4883, Goewermentskennisgewing 2077 van 31 Oktober 1975, vervang die inskrywing deur die volgende inskrywing:

Inskrywing No. Entry No.	Publikasie of voorwerp Publication or object	Skrywer of voortbringer Author or producer	Artikel 47 (2) Section 47 (2)
P75/10/34.....	*Peking Review*—No 32, 8 August 1975.....	Peking Review, Peking, China.....	(e)

No. 1798 22 Augustus 1980

ONGEWENSTE PUBLIKASIES OF VOORWERPE.—REGSTELLING

In *Staatskoerant* 5170, Goewermentskennisgewing 1093 van 25 Junie 1976, vervang die inskrywing deur die volgende inskrywing:

Inskrywing No. Entry No.	Publikasie of voorwerp Publication or object	Skrywer of voortbringer Author or producer	Artikel 47 (2) Section 47 (2)
P76/6/53.....	*Playboy (Edition Française)*—Vol 3, No 8, Août 1975	Printed in France.....	(a)

GOVERNMENT NOTICES

DEPARTMENT OF THE INTERIOR

No. 1788 22 August 1980

UNDESIRABLE PUBLIC TIONS OR OBJECTS

The Publications Appeal Board decided under section 14 (4) of the Publications Act, 1974, that the undermentioned publication is undesirable within the meaning of section 47 (2) of the said Act, and has set aside the decision by a committee referred to in section 4 of the said Act that the publication is not undesirable within the meaning of the said section 47 (2):

No. 1793 22 August 1980

UNDESIRABLE PUBLICATIONS OR OBJECTS.—CORRECTION

In *Government Gazette* 4883, Government Notice 2077 of 31 October 1975, substitute the following entry for the following entry:

No, 1798 22 August 1980

UNDESIRABLE PUBLICATIONS OR OBJECTS.—CORRECTION

In *Government Gazette* 5170, Government Notice 1093 of 25 June 1976, substitute the following entry for the following entry:

No. 1790 22 Augustus 1980

VERBOD OP BESIT VAN ONGEWENSTE PUBLIKASIES

'n Komitee bedoel in artikel 4 van die Wet op Publikasies, 1974, wat kragtens artikel 11 (2) van genoemde Wet beslis het dat die ondergenoemde publikasies ongewens is binne die bedoeling van artikel 47 (2) van genoemde Wet, het kragtens artikel 9 (3) van genoemde Wet die besit van genoemde publikasies verbied. Genoemde verbod is kragtens artikel 9 (5) van genoemde Wet deur die Appèlraad oor Publikasies bekrag.

No. 1790 22 August 1980

PROHIBITION ON POSSESSION OF UNDESIRABLE PUBLICATIONS

A committee referred to in section 4 of the Publications Act, 1974, which decided under section 11 (2) of the said Act that the undermentioned publications are undesirable within the meaning of section 47 (2) of the said Act, has under section 9 (3) of the said Act, prohibited the possession of the said publications. The said prohibition was confirmed by the Publications Appeal Board under section 9 (5) of the said Act.

Inskrywing No. Entry No.	Publikasie of voorwerp Publication or object	Skrywer of voortbringer Author or producer	Artikel 47 (2) Section 47 (2)
P80/5/120	*Act of Love, The*	Harvey T. Leathem, M.D. with Hugh A. Jones	(a)
P80/5/132	*Touch the Fire*	Grania Beckford	(a)
P80/5/133	*Business Love*	Rémy Garroux	(a)
P80/5/167	*Antonio Gramsci*	Harold Entwistle	(e)
P80/6/35	*Silent Boycott, The* (Pamflet/Pamphlet)	United Parents Front	(e)
P80/6/36	*Boycott Buses and Red Meat* (Pamflet/Pamphlet)	Muslim Students Association, University of Cape Town, Rondebosch	(e)
P80/6/38	*Mayibuye*—No 10, November	African National Congress of South Africa, Tanzania	(e)
P80/6/49	*Rideau Levé, Le*	Mirabeau	(a)
P80/6/58	*Students and Workers Unite*—May 30, 1980 (Pamflet/Pamphlet)	Students for Social Democracy, University of Cape Town, Rondebosch	(e)
P80/6/66	*Bus Strike* (Pamflet/Pamphlet)	Onbekend/Unknown	(e)
P80/6/67	*Focus on Strike*—June 16 & 17 (Pamflet/Pamphlet)	Onbekend/Unknown	(e)
P80/6/69	*Communist Manifesto: Socialist Landmark*	Harold J. Laski	(e)
P80/6/73	*PCR Information Reports and Background Papers*—No 5, 1980	World Council of Churches, Geneva	(e)
P80/6/76	*Battle for South Africa, The*	Anti-Apartheid Movement, London	(e)
P80/6/78	*Jana Shakti*—May Issue 1980	Onbekend/Unknown	(e)
P80/6/84	*Südafrika—am Vorabend der Revolution*	Franz J. T. Lee	(e)
P80/6/85	*United Nations: Unit on Apartheid: Notes and Documents*—No 8/75, March 1975	United Nations, Department of Political and Security Council Affairs	(e)
P80/6/87	*United Nations: Centre Against Apartheid: Notes and Documents*—No 22/76, September 1976	United Nations, Department of Political and Security Council Affairs	(e)
P80/6/91	*Up & Coming*	Molly Parkin	(a)+(b)
P80/6/93	*Protocols of the Learned Elders of Zion*	Victor E. Marsden	(d)
P80/6/105	*Black Students' Society Newsletter*—Vol 1, No 2, June 1980	Black Students' Society, University of Natal, Durban	(d)+(e)
P80/6/116	*Sechaba*—June 1980	African National Congress of South Africa, Tanzania	(e)
P80/6/129	*Private International Color Playing Cards* (Speelkaarte/Playing cards—Voorwerp/Object)	Private Press AB, Stockholm, Sweden	(a)
P80/6/130	*Famous Sex Comics*	John J. Reynolds, M. A.	(a)
P80/6/131	*Carnal Comics*—No 2	Edited by Dwain Bryan	(a)
P80/6/133	*Penthouse*—December 1979	Penthouse International Ltd, New York	(a)
P80/7/5	*TCLSAC Reports*—June 1980	Toronto Committee for the Liberation of Southern Africa, Toronto, Ontario, Canada	(e)
P80/7/6	*Soweto*—June 16	Printed by Leader Press, Overport	(e)
P80/7/12	*Isandiwana Revolutionary Effort*—16th June 1980	Nie vermeld nie/Not stated	(e)
P80/7/13	*Azania News*—Vol 14, No 9–12, September-December 1979	P A C of Azania (SA), Tanzania	(e)
P80/7/22	*Freedom Charter, The*—met 'People Demand . . .' op keersy (Pamflet/Pamphlet)	Transvaal Free Mandela Committee	(e)
P80/7/23	*Wits Student*—Vol 32, No 14	SRC, University of the Witwatersrand, Johannesburg	(e)
P80/7/54	*Taalkoos*—No 1, Junie 1980	Uitgewery Pannevis, Pinegowrie	(a)
P80/6/42	*Anti-Apartheid News*—June 1980	Anti-Apartheid Movement, London	(e)

No. 1792 22 Augustus 1980

ONGEWENSTE PUBLIKASIES OF VOORWERPE.—REGSTELLING

In *Staatskoerant* 4867, Goewermentskennisgewing 1940 van 9 Oktober 1975, vervang die inskrywings deur die volgende inskrywings:

No. 1792 22 August 1980

UNDESIRABLE PUBLICATIONS OR OBJECTS.—CORRECTION

In *Government Gazette* 4867, Government Notice 1940 of 9 October 1975, substitute the following entries for the following entries:

Inskrywing No. Entry No.	Publikasie of voorwerp Publication or object	Skrywer of voortbringer Author or producer	Artikel 47 (2) Section 47 (2)
P75/8/101	*Tempo*—No 221, 22 de Dezembro de 1974	Albino Magaia	(e)
P75/9/178	*Late Night Extra*—No 11	Plant News Ltd, London	(a)
P75/9/179	*Sexuality*—Vol 1, No 11	Gadoline Ltd, Gadoline House, Surrey	(a)

No. 1787 22 Augustus 1980

ONGEWENSTE PUBLIKASIES OF VOORWERPE

'n Komitee bedoel in artikel 4 van die Wet op Publikasies, 1974, het kragtens artikel 11 (2) van genoemde Wet beslis dat die ondergenoemde publikasies of voorwerpe ongewens is binne die bedoeling van artikel 47 (2) van genoemde Wet:

No. 1787 22 August 1980

UNDESIRABLE PUBLICATIONS OR OBJECTS

A committee referred to in section 4 of the Publications Act, 1974, decided under section 11 (2) of the said Act that the undermentioned publications or objects are undesirable within the meaning of section 47 (2) of the said Act:

LYS/LIST No. P80/44

Inskrywing No. Entry No.	Publikasie of voorwerp Publication or object	Skrywer of voortbringer Author or producer	Artikel 47 (2) Section 47 (2)
P80/7/106	*Lily*	Sandrine Forge	(a)
P80/7/171	*Whirlwind before the Storm*	Alan Brooks and Jeremy Brickhill	(e)
P80/8/3	*Pan Africanism .. Struggle Against Neo-Colonialism and Imperialism*	Afro-Carib Publications, Toronto, Canada	(e)
P80/8/4	*Resolutions and Selected Speeches from the Six Pan African Congress*	Tanzania Publishing House, Dar es Salaam	(e)
P80/8/25	*Fanon*	Peter Geismar	(e)
P80/8/29	*Black and White Power Subreption*	Joseph R Washington, Jr	(e)
P80/8/38	*Jou Gewete in verband met die Boikot* (Pamflet/Pamphlet)	Nie vermeld nie/Not Stated	(e)
P80/8/39	*Boycott Continues, The* (Pamflet/Pamphlet)	The Students' Regional Committee	(e)
P80/8/40	*What has gone wrong with the Boycott ????* (Pamflet/Pamphlet)	Nie vermeld nie/Not Stated	(e)
P80/8/41	*Struggle for Zimbabwe, The*	NUSAS, University of Cape Town, Rondebosch	(e)
80/8/42	*Match Newsletter/Bulletin Match*—Vol 4, No/Numéro 3, June/Juin 1980	Match International Centre, Canada	(e)
P80/8/45	*Meat Strike Continues, The* (Pamflet/Pamphlet)	Wages Commission, University of Cape Town, Rondebosch	(e)
P80/8/46	*Justice?* (Pamflet/Pamphlet)	Wits Projects Comm, Johannesburg	(e)
P80/8/54	*I, A Man*	Sverre Holm	(a)

University of Fort Hare
Together in Excellence

No. 1791 22 Augustus 1980

ONGEWENSTE PUBLIKASIES OF VOORWERPE.—REGSTELLING

In *Staatskoerant* 4846, Goewermentskennisgewing 1792 van 19 September 1975, vervang die inskrywings deur die volgende inskrywings:

No. 1791 22 August 1980

UNDESIRABLE PUBLICATIONS OR OBJECTS.—CORRECTION

In *Government Gazette* 4846, Government Notice 1792 of 19 September 1975, substitute the following entries for the following entries:

Inskrywing No. Entry No.	Publikasie of voorwerp Publication or object	Skrywer of voortbringer Author or producer	Artikel 47 (2) Section 47 (2)
P75/8/121	*Program for Social Change Newsletter*—No 2, 1/2/1974	Program for Social Change	(d)+(e)
P75/8/93	*Tibits*—No 4665, August 7–13, 1975	IPC Magazines Ltd, London	(a)
P75/9/14	*Open*—Vol 4, No 3	Roydock Books Ltd, Holborn, London	(a)
P75/9/61	*ERC: Eight Semi Nude Prints*—No 1 (Foto's/Photographs)	ERC Publications, Braamfontein	(a)
P75/9/80	*Sex Fantasy*—Vol 2, No 2	Gadoline Ltd, Surrey	(a)
P75/9/79	*Sex in Marriage*—Issue No 3	Richard Warren	(a)
P75/9/81	*Outdoor Leisure*—No 41	Plant News (H and E) Ltd, London	(a)

No. 1813 22 Augustus 1980

ONGEWENSTE PUBLIKASIES OF VOORWERPE.—REGSTELLING

In *Staatskoerant* 6697, Goewermentskennisgewing 2274 van 5 Oktober 1979, vervang die inskrywing P79/7/138 deur die volgende inskrywing:

No. 1813 22 August 1980

UNDESIRABLE PUBLICATIONS OR OBJECTS.—CORRECTION

In *Government Gazette* 6697, Government Notice 2274 of 5 October 1979, substitute the following entry for entry P79/7/138:

Inskrywing No. Entry No.	Publikasie of voorwerp Publication or object	Skrywer of voortbringer Author or producer	Artikel 47 (2) Section 47 (2)
P79/7/138	*Sleutelringe met metaalskyfies aangeheg wat elk 'n ander voorstelling bevat van 'n naakte man en vrou wat geslagsgemeenskap het. 'n Vliëende perd is afgedruk op die rand van die sleutelring/Key chains with metal discs attached, each one containing a different representation of a nude male and female having intercourse. A flying horse is stamped on the rim of the ring* (Voorwerpe/Objects)	Flying Horse	(a)

No. 1794 22 Augustus 1980

ONGEWENSTE PUBLIKASIES OF VOORWERPE.—REGSTELLING

In *Staatskoerant* 4767, Goewermentskennisgewing 1272 van 27 Junie 1975, vervang die inskrywings deur die volgende inskrywings:

No. 1794 22 August 1980

UNDESIRABLE PUBLICATIONS OR OBJECTS.—CORRECTION

In *Government Gazette* 4767, Government Notice 1272 of 27 June 1975, substitute the following entries for the following entries:

Inskrywing No. Entry No.	Publikasie of voorwerp Publication or object	Skrywer of voortbringer Author or producer	Artikel 47 (2) Section 47 (2)
P75/6/48.....	*Gals and Gags*—New Series No 24.....	Kenmure Press (Pty) Ltd, North Lidcombe, NSW	(a)
P75/5/163.....	*Operation Namibia* (Pamflet/Pamphlet).....	Operation Namibia, Philadelphia, USA.....	(d)+(e)
P75/6/46.....	*Tosca*—Nr 3.....	Uitgeverij: De Toren.....	(a)

No. 1795 22 Augustus 1980

ONGEWENSTE PUBLIKASIES OF VOORWERPE.—REGSTELLING

In *Staatskoerant* 4782, Goewermentskennisgewing 1347 van 11 Julie 1975, vervang die inskrywings deur die volgende inskrywings:

No. 1795 22 August 1980

UNDESIRABLE PUBLICATIONS OR OBJECTS.—CORRECTION

In *Government Gazette* 4782, Government Notice 1347 of 11 July 1975, substitute the following entries for the following entries:

Inskrywing No. Entry No.	Publikasie of voorwerp Publication or object	Skrywer of voortbringer Author or producer	Artikel 47 (2) Section 47 (2)
P75/6/145.....	*Chick* 35—Vijfde Jaargang 1973.....	Bookpress, Amsterdam.....	(a)
P75/7/5.....	*Him Exclusive*—Issue No 2, 1975.....	The Incognito Publishing Co, London.....	(a)

University of Fort Hare
Together in Excellence

No. 1796 22 Augustus 1980

ONGEWENSTE PUBLIKASIES OF VOORWERPE.—REGSTELLING

In *Staatskoerant* 4860, Goewermentskennisgewing 1894 van 3 Oktober 1975, vervang die inskrywings deur die volgende inskrywings:

No. 1796 22 August 1980

UNDESIRABLE PUBLICATIONS OR OBJECTS.—CORRECTION

In *Government Gazette* 4860, Government Notice 1894 of 3 October 1975, substitute the following entries for the following entries:

Inskrywing No. Entry No.	Publikasie of voorwerp Publication or object	Skrywer of voortbringer Author or producer	Artikel 47 (2) Section 47 (2)
P75/9/49.....	*Hsinhua Weekly*—No 31, August 4, 1974.....	Printed by Hsinhua News Agency, Hongkong Branch	(e)
P75/9/53.....	*Flashes from the Trade Unions*—No 29, 30 July 1975	World Federation of Trade Unions.....	(e)
P75/9/167.....	*New Cuts*—No 3.....	Jens & Peter Theander, Denmark.....	(a)

No. 1807 22 Augustus 1980

ONGEWENSTE PUBLIKASIES OF VOORWERPE.—REGSTELLING

In *Staatskoerant* 5208, Goewermentskennisgewing 1207 van 9 Julie 1976, vervang die inskrywing deur die volgende inskrywing:

No. 1807 22 August 1980

UNDESIRABLE PUBLICATIONS OR OBJECTS.—CORRECTION

In *Government Gazette* 5208, Government Notice 1207 of 9 July 1976, substitute the following entry for the following entry:

Inskrywing No. Entry No.	Publikasie of voorwerp Publication or object	Skrywer of voortbringer Author or producer	Artikel 47 (2) Section 47 (2)
P76/6/150.....	*Relate*—Vol 5, No 2.....	Search, Relate, Accord Publications, Surrey....	(a)

No. 1799 22 Augustus 1980

ONGEWENSTE PUBLIKASIES OF VOORWERPE.—REGSTELLING

In *Staatskoerant* 4889, Goewermentskennisgewing 2123 van 7 November 1975, vervang die inskrywings deur die volgende inskrywings:

No. 1799 22 August 1980

UNDESIRABLE PUBLICATIONS OR OBJECTS.—CORRECTION

In *Government Gazette* 4889, Government Notice 2123 of 7 November 1975, substitute the following entries for the following entries:

Inskrywing No. Entry No.	Publikasie of voorwerp Publication or object	Skrywer of voortbringer Author or producer	Artikel 47 (2) Section 47 (2)
P75/10/122.....	*Pocket-Porno*—No 5.....	Carl Stephenson Verl, Flensburg.....	(a)
P75/10/123.....	*Casch*—No 2.....	Onbekend/Unknown.....	(a)
P75/10/145.....	*Sexy Girl: Lesbian*.....	PR-Production, Malmö, Schweden.....	(a)
P75/10/146.....	*Bouncy Babes*—No. 7, Spring 1970.....	Health Knowledge Inc, New York.....	(a)

No. 1800 22 Augustus 1980

ONGEWENSTE PUBLIKASIES OF VOORWERPE.—REGSTELLING

In *Staatskoerant* 5140, Goewermentskennisgewing 929 van 28 Mei 1976 vervang inskrywings P76/3/37 en P76/5/86 deur die volgende inskrywings respektiewelik, en skrap inskrywing P76/4/70:

No. 1800 22 August 1980

UNDESIRABLE PUBLICATIONS OR OBJECTS.—CORRECTION

In *Government Gazette* 5140, Government Notice 929 of 28 May 1976 substitute entries P76/3/37 and P76/5/86 for the following entries respectively and delete entry P76/4/70:

Inskrywing No. Entry No.	Publikasie of voorwerp Publication or object	Skrywer of voortbringer Author or producer	Artikel 47 (2) Section 47 (2)
P76/3/37.....	*Maytbaye*—Vol I, No 10, November 1975.....	African National Congress of South Africa, Lusaka	(d)+(e)
P76/5/86.....	*Creepy*—Issue No 77, February 1976.....	Warren Publishing Co, New York.....	(a)+(b)

University of Pretoria
Together in Excellence

No. 1801 22 Augustus 1980

ONGEWENSTE PUBLIKASIES OF VOORWERPE.—REGSTELLING

In *Staatskoerant* 4921, Goewermentskennisgewing 2358 van 12 Desember 1975, vervang die inskrywings deur die volgende inskrywings:

No. 1801 22 August 1980

UNDESIRABLE PUBLICATIONS OR OBJECTS.—CORRECTION

In *Government Gazette* 4921, Government Notice 2358 of 12 December 1975, substitute the following entries for the following entries:

Inskrywing No. Entry No.	Publikasie of voorwerp Publication or object	Skrywer of voortbringer Author or producer	Artikel 47 (2) Section 47 (2)
P75/11/128.....	*Best from Playboy, The*—No 8.....	Playboy Press, Chicago.....	(a)
P75/11/129.....	*Gay News*—No 79.....	Gay News Ltd, London.....	(a)

No. 1810 22 Augustus 1980

ONGEWENSTE PUBLIKASIES OF VOORWERPE.—REGSTELLING

In *Staatskoerante* 5485 en 5574, Goewermentskennisgewings 527 en 988 van 1 April 1977 en 3 Junie 1977 respektiewelik, vervang die inskrywing P77/3/60 deur die volgende inskrywing:

No. 1810 22 August 1980

UNDESIRABLE PUBLICATIONS OR OBJECTS.—CORRECTION

In *Government Gazettes* 5485 and 5574, Government Notices 527 and 988 of 1 April 1977 and 3 June 1977 respectively, substitute the following entry for entry P77/3/60:

Inskrywing No. Entry No.	Publikasie of voorwerp Publication or object	Skrywer of voortbringer Author or producer	Artikel 47 (2) Section 47 (2)
P77/3/60.....	*VOW (Voice of Women)*—Fourth Quarter 1976	ANC—Women's Section, Lusaka.....	(d)+(e)

No. 1802 22 Augustus 1980

ONGEWENSTE PUBLIKASIES OF VOORWERPE.—REGSTELLING

In *Staatskoerant* 5080, Goewermentskennisgewing 644 van 9 April 1976, vervang die inskrywing deur die volgende inskrywing:

No. 1802 22 August 1980

UNDESIRABLE PUBLICATIONS OR OBJECTS.—CORRECTION

In *Government Gazette* 5080, Government Notice 644 of 9 April 1976, substitute the following entry for the following entry:

Inskrywing No. Entry No.	Publikasie of voorwerp Publication or object	Skrywer of voortbringer Author or producer	Artikel 47 (2) Section 47 (2)
P76/3/146.....	*Abasebenzi*—No 2, February 1976.....	Ngokukhutshwa yi Khomishini Yemivuzo, SRC/ University of Cape Town, Rondebosch	(e)

No. 1803 22 Augustus 1980

ONGEWENSTE PUBLIKASIES OF VOORWERPE.—REGSTELLING

In *Staatskoerant* 5192, Goewermentskennisgewing 1171 van 2 Julie 1976, vervang die inskrywings deur die volgende inskrywings:

No. 1803 22 August 1980

UNDESIRABLE PUBLICATIONS OR OBJECTS.—CORRECTION

In *Government Gazette* 5192, Government Notice 1171 of 2 July 1976, substitute the following entries for the following entries:

Inskrywing No. Entry No.	Publikasie of voorwerp Publication or object	Skrywer of voortbringer Author or producer	Artikel 47 (2) Section 47 (2)
P76/6/6.....	*Eerie*—Issue No 73, March 1976.....	Warren Publishing Co, New York.....	(a)+(b)
P76/6/28.....	*Official Detective Stories*—Vol 46, No 7, July 1976	RGH Publishing Corp, New York.....	(a)+(e)

No. 1804 22 Augustus 1980

ONGEWENSTE PUBLIKASIES OF VOORWERPE.—REGSTELLING

In *Staatskoerant* 4904, Goewermentskennisgewing 2240 van 21 November 1975, vervang die inskrywings deur die volgende inskrywings:

No. 1804 22 August 1980

UNDESIRABLE PUBLICATIONS OR OBJECTS.—CORRECTION

In *Government Gazette* 4904, Government Notice 2240 of 21 November 1975, substitute the following entries for the following entries:

Inskrywing No. Entry No.	Publikasie of voorwerp Publication or object	Skrywer of voortbringer Author or producer	Artikel 47 (2) Section 47 (2)
P75/11/27.....	*Popular Jokes*—Vol 12, No 58, December 1975..	Visual Varieties Inc, New York.....	(a)
P75/11/28.....	*Cartoon Fun and Comedy*—Vol 9, No 79, October 1975	Humorama Inc, New York	(a)
P75/11/36.....	*Kent*—No 7.....	Magazin-Publishing Ltd, Zürich (Switzerland)..	(a)

No. 1806 22 Augustus 1980

ONGEWENSTE PUBLIKASIES OF VOORWERPE.—REGSTELLING

In *Staatskoerant* 5230, Goewermentskennisgewing 1288 van 23 Julie 1976, vervang die inskrywing deur die volgende inskrywing:

No. 1806 22 August 1980

UNDESIRABLE PUBLICATIONS OR OBJECTS.—CORRECTION

In *Government Gazette* 5230, Government Not'ce 1288 of 23 July 1976, substitute the following entry for the following entry:

Inskrywing No. Entry No.	Publikasie of voorwerp Publication or object	Skrywer of voortbringer Author or producer	Artikel 47 (2) Section 47 (2)
P76/7/38.....	*Astra*—Issue 9.....	Verve Publications Ltd, London.....	(a)

No. 1812 22 Augustus 1980

ONGEWENSTE PUBLIKASIES OF VOORWERPE.—REGSTELLING

In *Staatskoerant* 4855, Goewermentskennisgewing 1828 van 26 September 1975, vervang die inskrywing deur die volgende inskrywing:

No. 1812 22 August 1980

UNDESIRABLE PUBLICATIONS OR OBJECTS.—CORRECTION

In *Government Gazette* 4855, Government Notice 1828 of 26 September 1975, substitute the following entry for the following entry:

Inskrywing No. Entry No.	Publikasie of voorwerp Publication or object	Skrywer of voortbringer Author or producer	Artikel 47 (2) Section 47 (2)
P75/9/100.....	*Vi Menn*—Nr 22, 27 Mai 1975.....	Ernst G. Mortensens Forlag Sykodalsveien—Oslo	(a)

No. 1808 22 Augustus 1980

ONGEWENSTE PUBLIKASIES OF VOORWERPE.—REGSTELLING

In *Staatskoerant* 4801, Goewermentskennisgewing 1438 van 25 Julie 1975, vervang die inskrywings deur die volgende inskrywings:

No. 1808 22 August 1980

UNDESIRABLE PUBLICATIONS OR OBJECTS.—CORRECTION

In *Government Gazette* 4801, Government Notice 1438 of 25 July 1975, substitute the following entries for the following entries:

Inskrywing No. Entry No.	Publikasie of voorwerp Publication or object	Skrywer of voortbringer Author or producer	Artikel 47 (2) Section 47 (2)
P75/6/61.....	*High Times*—No 3, Winter '75.....	Trans-High Corporation, New York.....	(a)
P75/6/147.....	*Kalahariglobe*—Vol 8, No's 5 & 6, May/June 1975	South West Africa People's Organisation of Namibia (SWAPO), London	(d)+(e)
P75/5/127.....	*Kalahari Dawn*—Vol 8, No's 3 & 4, March/April 1975	South West Africa People's Organisation of Namibia (SWAPO), London	(d)+(e)

No. 1809 22 Augustus 1980

ONGEWENSTE PUBLIKASIES OF VOORWERPE.—REGSTELLING

In *Staatskoerante* 7075 en 7138, Goewermentskennisgewings 1272 en 1537 van 13 Junie 1980 en 18 Julie 1980, respektiewelik, vervang die inskrywing P80/6/12 deur die volgende inskrywing:

No. 1809 22 August 1980

UNDESIRABLE PUBLICATIONS OR OBJECTS.—CORRECTION

In *Government Gazettes* 7075 and 7138, Government Notices 1272 and 1537 of 13 June 1980 and 18 July 1980 respectively, substitute the following entry for entry P80/6/12:

Inskrywing No. Entry No.	Publikasie of voorwerp Publication or object	Skrywer of voortbringer Author or producer	Artikel 47 (2) Section 47 (2)
P80/6/12.....	*Christians and Churches in the GDR*—1980 Edition	Panorama DDR, 1054 Berlin.....	(e)

University of Fort Hare
Together in Excellence

No. 1811 22 Augustus 1980

ONGEWENSTE PUBLIKASIES OF VOORWERPE.—REGSTELLING

In *Staatskoerant* 4775, Goewermentskennisgewing 1306 van 4 Julie 1975, vervang die inskrywings deur die volgende inskrywings:

No. 1811 22 August 1980

UNDESIRABLE PUBLICATIONS OR OBJECTS.—CORRECTION

In *Government Gazette* 4775, Government Notice 1306 of 4 July 1975, substitute the following entries for the following entries:

Inskrywing No. Entry No.	Publikasie of voorwerp Publication or object	Skrywer of voortbringer Author or producer	Artikel 47 (2) Section 47 (2)
P75/6/22.....	*Focus on Southern Africa*—Vol 1, No 4, Dec 1974—Jan 1975	Mindolo Ecumenical Foundation, Kitwe, Zambia	(e)
P75/6/50.....	*Girl of the Month*—Vol 1, No 1.....	The Pretty Girl Publishing Co, Hollywood, California	(a)
P75/6/52.....	*M: Die Zeitschrift für den Mann*—8 August 1970	Printed in Germany.....	(a)

No. 1789 22 Augustus 1980

PUBLIKASIES OF VOORWERPE.—VERTOË TEN OPSIGTE VAN APPÈL

Die Direktoraat van Publikasies het op 11 Augustus 1980, kragtens artikel 13 van die Wet op Publikasies, 1974, appèl aangeteken teen die beslissing op 23 Julie 1980, van 'n komitee bedoel in artikel 4 van genoemde Wet dat die besit van die ondergenoemde publikasies binne die bedoeling van artikel 9 (3) van genoemde Wet verbied moet word:

No. 1789 22 August 1980

PUBLICATIONS OR OBJECTS.—REPRESENTATIONS IN RESPECT OF APPEAL

On 11 August 1980, the Directorate of Publications appealed under section 13 of the Publications Act, 1974, against the decision on 23 July 1980, of a committee referred to in section 4 of the said Act, that the possession of the undermentioned publications shall be prohibited within the meaning of section 9 (3) of the said Act:

Inskrywing No. Entry No.	Publikasie of voorwerp Publication or object	Skrywer of voortbringer Author or producer
P80/7/68.....	*J. V. Stalin Works*—Vol 1, 1901–1907; Vol 2, 1907–1913; Vol 3, March–October 1917; Vol 4, November 1917–1920; Vol 13, July 1930–January 1934	J. V. Stalin.

No. 1797 22 Augustus 1980

ONGEWENSTE PUBLIKASIES OF VOORWERPE.—REGSTELLING

In *Staatskoerant* 4828, Goewermentskennisgewing 1678 van 29 Augustus 1975, vervang die inskrywings deur die volgende inskrywings:

No. 1797 22 August 1980

UNDESIRABLE PUBLICATIONS OR OBJECTS.—CORRECTION

In *Government Gazette* 4828, Government Notice 1678 of 29 August 1975, substitute the following entries for the following entries:

Inskrywing No. Entry No.	Publikasie of voorwerp Publication or object	Skrywer of voortbringer Author or producer	Artikel 47 (2) Section 47 (2)
P75/8/6	*Soho International*—No 12	Top Sellers Ltd, London	(a)
P75/8/18	*Pathway*—No 28	Pathway Publications, London	(a)
P75/8/19	*EST (Contact Magazine)*—Vol 1, No 8, 1973	EST Publications Ltd, Newport	(a)
P75/8/20	*Linuep: Special Xmas and New Year Edition: Adult Personal Advertiser*	Norcol Enterprises, Essex, England	(a)

No. 1805 22 Augustus 1980

ONGEWENSTE PUBLIKASIES OF VOORWERPE.—REGSTELLING

In *Staatskoerant* 4897, Goewermentskennisgewing 2179 van 14 November 1975, vervang die inskrywings deur die volgende inskrywings:

No. 1805 22 August 1980

UNDESIRABLE PUBLICATIONS OR OBJECTS.—CORRECTION

In *Government Gazette* 4897, Government Notice 2179 of 14 November 1975, substitute the following entries for the following entries:

Inskrywing No. Entry No.	Publikasie of voorwerp Publication or object	Skrywer of voortbringer Author or producer	Artikel 47 (2) Section 47 (2)
P75/10/52	*Forum*—Vol 2, No 9	Penthouse Publications (Pty) Ltd, Woollahra, N S W	(a)
P75/10/35	*Pekin Information*—No 36, 8 Septembre '75	Pekin Information, Pékin, Chine	(c)
P75/10/164	*Keyhole*—No 9	Onbekend/Unknown	(a)

University of Pretoria
Together in Excellence

INHOUD

No.		Bladsy No.	Staatskoerant No.
Binnelandse Sake, Departement van			
Goewermentskennisgewings			
1787	Wet op Publikasies (42/1974): Ongewenste publikasies of voorwerpe: Lys P80/44	3	7195
1788	do.: do.: Lys P80/45	1	7195
1789	do.: do.: Vertoë	7	7195
1790	do.: do.: Verbod	2	7195
1791	do.: do.: Regstelling	3	7195
1792	do.: do.: do	2	7195
1793	do.: do.: do	1	7195
1794	do.: do.: do	4	7195
1795	do.: do.: do	4	7195
1796	do.: do.: do	4	7195
1797	do.: do.: do	8	7195
1798	do.: do.: do	1	7195
1799	do.: do.: do	5	7195
1800	do.: do.: do	5	7195
1801	do.: do.: do	5	7195
1802	do.: do.: do	6	7195
1803	do.: do.: do	6	7195
1804	do.: do.: do	6	7195
1805	do.: do.: do	8	7195
1806	do.: do.: do	6	7195
1807	do.: do.: do	4	7195
1808	do.: do.: do	7	7195
1809	do.: do.: do	7	7195
1810	do.: do.: do	5	7195
1811	do.: do.: do	7	7195
1812	do.: do.: do	6	7195
1813	do.: do.: do	3	7195

CONTENTS

No.		Page No.	Gazette No.
Interior, Department of the			
Government Notices			
1787	Publications Act (42/1974): Undesirable publications or objects: List P80/44	3	7195
1788	do.: do.: List P80/45	1	7195
1789	do.: do.: Representations	7	7195
1790	do.: do.: Prohibition	2	7195
1791	do.: do.: Correction	3	7195
1792	do.: do.: do	2	7195
1793	do.: do.: do	1	7195
1794	do.: do.: do	4	7195
1795	do.: do.: do	4	7195
1796	do.: do.: do	4	7195
1797	do.: do.: do	8	7195
1798	do.: do.: do	1	7195
1799	do.: do.: do	5	7195
1800	do.: do.: do	5	7195
1801	do.: do.: do	5	7195
1802	do.: do.: do	6	7195
1803	do.: do.: do	6	7195
1804	do.: do.: do	6	7195
1805	do.: do.: do	8	7195
1806	do.: do.: do	6	7195
1807	do.: do.: do	4	7195
1808	do.: do.: do	7	7195
1809	do.: do.: do	7	7195
1810	do.: do.: do	5	7195
1811	do.: do.: do	7	7195
1812	do.: do.: do	6	7195
1813	do.: do.: do	3	7195

Gedruk deur en verkrygbaar by die Staatsdrukker, Bosmanstraat, Privaatsak X85, Pretoria, 0001

Printed by and obtainable from the Government Printer, Bosman Street, Private Bag X85, Pretoria, 0001

7196
University of Fort Hare
Together in Excellence

STAATSKOERANT
VAN DIE REPUBLIEK VAN SUID-AFRIKA

REPUBLIC OF SOUTH AFRICA
GOVERNMENT GAZETTE

PRYS + 1c AVB 20c PRICE + 1c GST
As 'n Nuusblad by die Poskantoor Geregistreer BUITELANDS 30c ABROAD Registered at the Post Office as a Newspaper
POSVRY · POST FREE

VOL. 182] KAAPSTAD, 29 AUGUSTUS 1980 [No. 7196
CAPE TOWN, 29 AUGUST 1980

IN MINE TUO VIDEBIMUS LUMEN
University of Fort Hare
Together in Excellence

ALGEMENE KENNISGEWINGS

DEPARTEMENT VAN NYWERHEIDSWESE

KENNISGEWING 591 VAN 1980

WET OP STANDAARDE, 1962

VERPLIGTE STANDAARDSPESIFIKASIE VIR DIE VEILIGHEID VAN ELEKTRIESE TOESTELLE

Kragtens artikel 15 (3) van die Wet op Standaarde, 1962, word hierby bekend gemaak dat die Minister van Nywerheidswese voornemens is om die standaardspesifikasie in die Bylae tot 'n verpligte standaardspesifikasie te verklaar.

Die uitwerking van sodanige verklaring is dat geen persoon, vanaf 'n datum wat vasgestel moet word, behalwe op die gesag van 'n geldige vrystellingspermit enige elektriese toestel mag verkoop wat nie in alle opsigte aan die vereistes van die verpligte standaardspesifikasie voldoen nie.

Enige persoon wat teen die bepalings van die voorgestelde verpligte standaardspesifikasie beswaar wil maak, moet sy beswaar binne drie maande na die datum van die publikasie van hierdie kennisgewing skriftelik aan die Direkteur-generaal, Suid-Afrikaanse Buro vir Standaarde, Privaatsak X191, Pretoria, voorlê.

BYLAE

VERPLIGTE STANDAARDSPESIFIKASIE VIR DIE VEILIGHEID VAN ELEKTRIESE TOESTELLE

1. BESTEK

1.1 Hierdie spesifikasie dek die veiligheid van elektriese kook-, verwarming-, motorgedrewe en magnetiesbeheerde huishoudelike toestelle vir gebruik teen 'n spanning van meer as 42 V en hoogstens 250 V na

GENERAL NOTICES

DEPARTMENT OF INDUSTRIES

NOTICE 591 OF 1980

STANDARDS ACT, 1962

COMPULSORY STANDARD SPECIFICATION FOR THE SAFETY OF ELECTRICAL APPLIANCES

Notice is hereby given in terms of section 15 (3) of the Standards Act, 1962, that the Minister of Industries intends to declare the standard specification contained in the Schedule to be a compulsory standard specification.

The effect of such declaration is that as from a date to be specified no person shall, except on the authority of a valid exemption permit, sell any electrical appliance that does not comply in all respects with the requirements of the compulsory standard specification.

Any person who wishes to object to the provisions of the proposed compulsory standard specification shall submit his objection in writing to the Director-General, South African Bureau of Standards, Private Bag X191, Pretoria, within three months from the date of publication of this notice.

SCHEDULE

COMPULSORY STANDARD SPECIFICATION FOR THE SAFETY OF ELECTRICAL APPLIANCES

1. SCOPE

1.1 This specification covers the safety of electrical cooking, heating, motor-operated, and magnetically controlled domestic appliances, for use at voltages above 42 V and not exceeding 250 V to earth; it also

aarde; dit dek ook ander elektriese toestelle vir gebruik in daardie spanningsbestek, wat aan lede van die publiek beskikbaar is vir gebruik in omstandighede wat nie deur spesifieke veiligheidswetgewing gedek word nie.

Indien enige toestel wat binne die bestek van hierdie spesifikasie val, enige komponent bevat wat deur 'n afsonderlike verpligte standaardspesifikasie gedek word, moet sodanige komponent ook aan die vereistes van daardie spesifikasie voldoen.

Die spesifikasie dek algemene vereistes wat op alle toestelle van toepassing is.

2. WOORDBEPALING EN TERMINOLOGIE

2.1 Waar die term spanning en stroom gebruik word, veronderstel dit in die geval van wisselstroom die w.g.k.-waardes tensy daar anders gespesifiseer word.

2.2 Die volgende woordbepalings geld vir die doel van hierdie spesifikasie:

Aanneemlik. Aanneemlik vir die owerheid wat die spesifikasie administreer.

Aangeslane frekwensie. Die frekwensie wat die fabrikant aan 'n toestel aanwys.

Aangeslane frekwensiebestek. Die frekwensiebestek wat die fabrikant aan 'n toestel aanwys en wat deur die onderste en boonste grense uitgedruk word.

Aangeslane inset. Die inset, in watt of ampère, wat die fabrikant aan 'n toestel aanwys.

Aangeslane spanning. Die spanning (vir driefasige toevoer, die spanning tussen fases) wat die fabrikant aan 'n toestel aanwys.

Aangeslane spanningsbestek. Die spanningsbestek wat die fabrikant aan 'n toestel aanwys en wat deur die boonste en onderste grense uitgedruk word.

Aangeslane stroom. Die stroom wat die fabrikant aan die toestel aanwys.

Aangeslane vermoë van 'n toestel met 'n vloeistofhouer. Die hoeveelheid vloeistof waarvoor die toestel ontwerp is.

Aangeslane werktyd. Die werktyd wat die fabrikant aan 'n toestel aanwys.

Aanvullende isolasie. Onafhanklike elektriese isolasie wat benewens basiese isolasie voorsien word om beveiliging teen elektriese skok te verseker ingeval die basiese isolasie faal.

Afhaalbare kabel of koord. 'n Buigsame kabel of koord vir toevoerdoeleindes, wat bedoel is om met behulp van 'n toestelkoppelaar met die toestel verbind te word.

Basiese isolasie. Die isolasie wat oor lewendige dele aangebring word om fundamentele beveiliging teen elektriese skok te verskaf.

Deurlopende werking. Werking vir 'n onbeperkte tydperk onder gewone las of in toestande van voldoende hittevrystelling.

Dubbelisolasie. Elektriese isolasie wat uit basiese sowel as aanvullende isolasie bestaan.

Ekstra lae spanning. Spanning wat gelewer word deur 'n bron binne 'n toestel deur 'n baan wat slegs deur die basiese isolasie van die ander bane geskei is en wat, as die toestel by sy aangeslane spanning werk, nie 42 V tussen geleiers en tussen geleiers en aarde oorskry nie, maar wat in die geval van 'n driefasige toevoer nie 24 V tussen geleiers en die nulgeleier oorskry nie.

Ekstra lae veiligheidspanning. 'n Nominale spanning (wat, wanneer dit van 'n kragnet met 'n hoër spanning verkry word, gelewer word deur 'n veiligheidsisoleertransformator of 'n omsetter met afsonderlike wikkelings) tussen geleiers en tussen geleiers en aarde van hoogstens 42 V maar, in die geval van driefasebane, hoogstens 24 V tussen geleiers en die nulgeleier, waar die nullaspanning van die baan onderskeidelik hoogstens 50 V en 29 V is in die geval van enkelfasige en driefasige bane.

Gereedskap. Gereedskap binne die gewone betekenis van die woord; ook 'n geldstuk of enige ander voorwerp wat gebruik kan word om 'n skroef of ander vashegtingsinrigting van 'n toestel los of vas te draai.

Gevaar. 'n Toestand wat die veiligheid van 'n toestel tot onder die gespesifiseerde of aanneemlike grense laat daal.

Gewone gebruik. Werking van 'n toestel volgens die fabrikant se aanwysings.

Gewone las. Die las wat aangewend word op 'n motorgedrewe toestel om toestande tydens gewone gebruik na te boots, terwyl daar gelet word op kortiermyn- of onderbroke werking (kyk 7.1 (*h*)) en terwyl, tensy daar anders gespesifiseer is, die verhittingselemente, indien daar is, soos in gewone gebruik in werking is.

Handtoestel. 'n Draagbare toestel wat tydens gewone gebruik in die hand gehou word.

Klas O-toestel. 'n Toestel wat deurgaans minstens basiese isolasie het, maar sonder voorsiening vir aarding.

Klas OI-toestel. 'n Toestel wat deurgaans minstens basiese isolasie het en wat voorsien is van 'n aardingsaansluiter, maar wat uitgerus is met 'n nie-afhaalbare buigsame tweeaarkoord.

Klas I-toestel. 'n Toestel wat deurgaans minstens basiese isolasie

covers other electrical appliances, for use in that voltage range, that are available to members of the public for use in circumstances not covered by specific safety legislation.

If any appliance falling within the scope of this specification contains any component covered by an individual compulsory standard specification, such component shall moreover comply with the requirements of that specification.

The specification covers general requirements applicable to all appliances.

2. DEFINITIONS AND TERMINOLOGY

2.1 Where the terms voltage and current are used, they shall in the case of A.C. imply the r.m.s. values unless otherwise specified.

2.2 For the purposes of this specification the following definitions shall apply:

Acceptable/Acceptably. Acceptable to the authority administering the specification.

Adequate heat discharge. Enough dissipation of heat to permit operation of a heating appliance in accordance with the manufacturer's instructions.

Alive (live). Electrically charged so as to have a potential different from that of the frame of the appliance.

Appliance. A machine, tool, device, or instrument operated by electricity for the purpose of doing work, or for providing heat, light, or motion, or in which electrical energy is modified into another form of energy.

Appliance for building-in. An appliance for permanent installation such as in a cupboard fitment or sink unit or in a prepared wall recess or similar situation.

Basic insulation. The insulation applied to live parts to provide fundamental protection against electric shock.

Body. The structure of an appliance including accessible metal parts, shafts of handles, knobs, and grips and metal foil in contact with accessible surfaces of insulating material.

Class O appliance. An appliance having at least basic insulation throughout, and that is without provision for earthing.

Class OI appliance. An appliance having at least basic insulation throughout and that is provided with an earthing terminal, but is fitted with a non-detachable two-core flexible cord.

Class I appliance. An appliance having at least basic insulation throughout and that is provided with an earthing terminal or earthing contact, and is designed for connection by means of a three-core flexible cord.

Class II appliance. An appliance having double insulation or reinforced insulation or both throughout, and that is without provision for earthing.

Class III appliance. An appliance for operation at safety extra-low voltage.

Clearance. The shortest distance, measured through air, between two conductive parts, or between a conductive part and the periphery of an appliance.

Continuous operation. Operation for an unlimited period under normal load or in conditions of adequate heat discharge.

Creepage. The shortest path between two conductive parts, or between a conductive part and the periphery of the appliance, measured along the surface of the insulation.

Detachable cable or cord. A flexible cable or cord for supply purposes and intended to be connected to an appliance by means of an appliance coupler.

Double insulation. Electrical insulation comprising both basic insulation and supplementary insulation.

Extra-low voltage. A voltage supplied from a source within an appliance and through a circuit that is separated from other circuits by basic insulation only, and that, when the appliance is operated at its rated voltage, does not exceed 42 V between conductors and between conductors and earth, but for three-phase supply does not exceed 24 V between conductors and neutral.

Fixed appliance. An appliance which is fastened or otherwise secured in a specific location.

Hand-held appliance. A portable appliance held in the hand during normal use.

Hazard. A condition that reduces the safety of an appliance to below specified or acceptable limits.

Interconnecting cable/cord. A flexible cable/cord provided as a component of an appliance for purposes other than supply.

Intermittent operation. Operation in a series of specified identical cycles (see 7.1 (*h*)), each cycle being composed of a period of operation under normal load or under conditions of adequate heat discharge followed by a rest period with the appliance running idle or switched off.

Normal load. The load applied to a motor-operated appliance to simulate conditions of normal use, any marking of short-time or intermittent operation (see 7.1 (*h*)) being observed and, unless

het en wat voorsien is van 'n aardingsaansluiter of aardingskontak en wat ontwerp is vir verbinding deur middel van 'n buigsame drieaarkoord.

Klas II-toestel. 'n Toestel wat deurgaans dubbelisolasie of versterkte isolasie of albei het, maar sonder voorsiening vir aarding.

Klas III-toestel. 'n Toestel wat by 'n ekstra lae veiligheidspanning werk.

Kortermynwerking. Werking onder normale las of in toestande van voldoende hittevrystelling vir 'n gespesifiseerde tydperk, van die koue toestand af, met 'n tussenpose tussen elke tydperk van werking wat groot genoeg is sodat die toestel tot omgewingstemperatuur kan afkoel.

Kragtoevoerkoord. 'n Buigsame kabel of koord vir kragtoevoerdoeleindes, wat op een van die volgende metodes vas is aan of deel uitmaak van die toestel:

Tipe M-bevestiging. 'n Bevestigingsmetode wat sodanig is dat die buigsame kabel of koord vervang kan word sonder spesiale doelgemaakte gereedskap, en wat bedoel is vir 'n spesiale koord, bv. met 'n aangevormde koordskerm of krimpeindpunte.

Tipe X-bevestiging. 'n Vashegtingsmetode wat sodanig is dat die buigsame kabel of koord vervang kan word sonder spesiale doelgemaakte gereedskap en sonder dat enige spesiale voorbereiding vir die vervanging van die kabel of koord gedoen hoef te word.

Tipe Y-bevestiging. 'n Bevestigingsmetode wat sodanig is dat die buigsame kabel of koord slegs met behulp van gereedskap wat spesifiek vir die doel ontwerp is en gewoonlik slegs aan die fabrikant of sy agente beskikbaar is, vervang kan word.

OPM.: Sodanige bevestigingsmetode kan vir gewone of vir spesiale buigsame kabels en koorde gebruik word.

Tipe Z-bevestiging. 'n Bevestigingsmetode wat sodanig is dat die buigsame kabel of koord nie vervang kan word sonder om 'n deel van die toestel te breek of te vernietig nie.

Kruipafstand. Die kortste pad tussen twee geleidende dele of tussen 'n geleidende deel en die omtrek van die toestel, oor die oppervlak van die isolasie gemeet.

Lewendig. Elektries gelaai, sodat dit 'n potensiaal het wat van dié van die raam van die toestel verskil.

Onderbroke werking. Werking in 'n reeks gespesifiseerde identiese siklusse (kyk 7.1 (*h*)) waarvan elke siklus bestaan uit 'n werktyd onder normale las of onder toestande van behoorlike hittevrystelling, gevolg deur 'n rustyd waartydens die toestel luier of afgeskakel is.

Ongunstig. Beskrywend van die toestand wat na alle waarskynlikheid sal veroorsaak dat 'n toestel/komponent nie in die toets sal slaag nie.

Romp. Die struktuur van 'n toestel, met inbegrip van toegankelike metaaldele, skagte van handvatsels, knoppe en greepstukke en metaalfoelie wat aan toeganklike oppervlakke van isoleermateriaal raak.

Staande toestel. 'n Toestel wat nie verskuif word terwyl dit werk nie en waarvan die massa meer as 18 kg is.

Temperatuurbegrenser. 'n Temperatuurgevoelige inrigting waarvan die werktemperatuur vas of verstelbaar is en wat tydens gewone gebruik werk deur 'n baan te verbreek of te sluit wanneer die temperatuur van die toestel of dele daarvan 'n vooraf bepaalde waarde bereik.

Termiese uitskakelaar. 'n Inrigting wat gedurende abnormale werking die temperatuur van 'n toestel of dele daarvan beperk deur die baan outomaties te verbreek of deur die stroom te verminder, en wat so gemaak is dat die instelling daarvan nie deur die gebruiker verander kan word nie.

Termostaat. 'n Temperatuurgevoelige inrigting waarvan die werktemperatuur vas of verstelbaar kan wees en wat gedurende normale gebruik die temperatuur tussen vooraf bepaalde grense hou.

Toestel. 'n Masjien, gereedskap, toestel of instrument wat elektrisiteit gebruik vir die doel om werk te verrig of om hitte, lig of beweging te verskaf of waarin elektriese energie in 'n ander vorm van energie omgeskakel word.

Toestel vir inbouing. 'n Toestel vir permanente installering sodat binne 'n ingeboude kas of 'n wasbakeenheid of in 'n gereedgemaakte muurinlaat of iets soortgelyk.

Toevoerleiding. 'n Stel geleiers (kruldrade) wat in 'n fabriek met die toestel verbind is en wat bedoel is vir die toevoerverbinding daarvan met vaste bedrading binne spesiale aansluitkassies of kompartemente wat binne die toestel verskaf word of daaraan vas is.

Tussenverbindkabel/koord. 'n Buigsame kabel/koord wat verskaf word as komponent van 'n toestel vir doeleindes wat nie met die toevoer te doen het nie.

Vaste toestel. 'n Toestel wat vasgemaak is of op ander wyse op 'n spesifieke plek bevestig is.

Veiligheidsisoleertransformator. 'n Transformator waarvan die

otherwise specified, heating elements, if any, being operated as in normal use.

Normal use. Operation of an appliance in accordance with the manufacturer's instructions.

Portable appliance. An appliance which is or may be moved while in normal use or can easily be moved from one place to another while connected to a power supply.

Power supply cord. A flexible cable or cord, for power supply purposes, fixed to, or assembled with the appliance by one of the following methods:

Type X attachment. A method of attachment such that the flexible cable or cord can be replaced without special purpose tools and without any special preparation of the replacement cable or cord.

Type M attachment. A method of attachment such that the flexible cable or cord can be replaced without special purpose tools, and that is intended for a special cord, e.g. having a moulded-on cord guard or crimped terminations.

Type Y attachment. A method of attachment such that the flexible cable or cord can only be replaced with the aid of tools designed specifically for the purpose and normally available only to the manufacturer or his agents.

NOTE: Such a method of attachment may be used with either ordinary or special flexible cables and cords.

Type Z attachment. A method of attachment such that the flexible cable or cord cannot be replaced without breaking or destroying a part of the appliance.

Rated capacity of an appliance with a liquid container. The quantity of liquid for which the appliance is designed.

Rated current. The current assigned to an appliance by the manufacturer.

Rated frequency. The frequency assigned to an appliance by the manufacturer.

Rated frequency range. The frequency range assigned to an appliance by the manufacturer, and expressed by its lower and upper limits.

Rated input. The input, in watts or amperes, assigned to an appliance by the manufacturer.

Rating operating time. The operating time assigned to an appliance by the manufacturer.

Rated voltage. The voltage (for three-phase supply, the voltage between phases) assigned to an appliance by the manufacturer.

Rated voltage range. The voltage range assigned to an appliance by the manufacturer, and expressed by its lower and upper limits.

Reinforced insulation. A single electrical insulation applied to live parts and that provides the same degree of protection against electric shock as double insulation.

Safety extra-low voltage. A nominal voltage (which, when obtained from supply mains of higher voltage(s), is supplied through a safety isolating transformer or a converter with separate windings) between conductors, and between conductors and earth not exceeding 42 V but, in the case of three-phase circuits, not exceeding 24 V between conductors and neutral, the no-load voltage of the circuit not exceeding 50 V and 29 V in the cases of single-phase and three-phase circuits, respectively.

Safety isolating transformer. A transformer, the input winding of which is electrically separated from the output winding by insulation at least equivalent to double insulation, and that is designed to supply safety extra-low voltage.

Short-time operation. Operation, under normal load or in conditions of adequate heat discharge, for a specified period, starting from cold, the interval between each period of operation being sufficient to allow the appliance to cool down the ambient temperature.

Stationary appliance. An appliance which is not moved while in operation and whose mass exceeds 18 kg.

Supplementary insulation. Independent electrical insulation provided in addition to basic insulation to ensure protection against electric shock in the event of a failure of the basic insulation.

Supply leads. A set of conductors (pigtails) connected to an appliance in the factory and intended for its supply connection to fixed wiring within special junction boxes or compartments provided within, or attached to the appliance.

Temperature limiter. A temperature-sensing device, the operating temperature of which may be either fixed or adjustable and which, during normal use, operates by opening or closing a circuit when the temperature of the appliance, or parts of it, reaches a predetermined value.

Thermal cut-out. A device which, during abnormal operation, limits the temperature of an appliance, or of parts of it, by automatically opening the circuit or by reducing the current, and which is so constructed that its setting cannot be altered by the user.

Thermostat. A temperature-sensing device, the operating tem-

insetwikkeling elektries geskei is van die leweringwikkeling deur isolasie wat minstens gelykstaande is met dubbelisolasie en wat ontwerp is om ekstra lae veiligheidspanning te lewer.

Verplaasbare toestel. 'n Toestel wat verskuif word of verskuif kan word terwyl dit in gewone gebruik is of wat maklik van een plek na 'n ander verskuif kan word terwyl dit met die kragtoevoer verbind is.

Versterkte isolasie. 'n Enkele elektriese isolasie wat op lewendige dele aangewend word en wat dieselfde mate van beveiliging teen elektriese skok bied as dubbelisolasie.

Voldoende hittevrystelling. Genoeg verstrooiing van hitte om toe te laat dat 'n verhittingstoestel volgens die fabrikant se aanwysings kan werk.

Vry ruimte. Die kortste afstand, deur die lug gemeet, tussen twee geleidende dele of tussen 'n geleidende deel en die omtrek van 'n toestel.

Werkspanning. Die maksimum spanning waaraan die komponent wat getoets word, onderwerp word wanneer die toestel by die maksimum aangeslane spanning in toestande van gewone gebruik werk, met inbegrip van veranderings in baankonfigurasie wat opgelê word deur sodanige waarskynlike gebeure soos die inwerkingstelling van 'n stroombreker of die faling van 'n lamp.

3. ALGEMENE VEREISTE

3.1 Konstruksie van Toestelle. Toestelle moet vry wees van elektriese en meganiese gevare, met inbegrip van skerp rande, brame en soortgelyke defekte wat kan veroorsaak dat 'n gebruiker beseer word. Geleiers en toebehore moet op so 'n wyse aangebring wees dat die toestelle hul bruikbare lewe lank veilig sal wees.

4. ALGEMENE OPMERKINGS OOR TOETSE

4.1 Indien die toetsresultate deur die temperatuur van die omringende lug beïnvloed word, moet dié temperatuur by 20 ± 5 °C gehou word, maar indien die temperatuur wat deur enige deel bereik word, deur 'n temperatuurgevoelige inrigting beperk word of beïnvloed word deur die temperatuur waarby 'n verandering in die toestand voorkom—bv. die temperatuur van kookwater—moet die omgewingstemperatuur by 23 ± 2 °C gehou word.

4.2 Tensy die teendeel daarop gemerk is (kyk 7.1 (*c*)), moet 'n toestel met wisselstroom by 'n frekwensie van 50 Hz getoets word. 'n Toestel met meer as een aangeslane spanningswaarde moet getoets word by die boonste grens van die bestek, maar 'n toestel met een of meer motore moet getoets word by die minimum, gemiddelde en maksimum grense van die spanningsbestek.

4.3 'n Toestel wat voorsien is van 'n termostaat, 'n reëlaar of soortgelyke kontrole, waarvan die instelling deur die gebruiker verander kan word en die middele vir die verstel van die kontrole sonder gebruik van gereedskap toeganklik is en nie verseël is om verandering van die instelling te voorkom nie, moet getoets word met die kontrole(s) ingestel op die ongunstigste instelling.

4.4 'n Toestel wat bedoel is om by ekstra lae veiligheidspanning te werk en wat verkoop word met die nodige toevoertransformator, moet saam met die toevoertransformator getoets word.

4.5 Vir die doeleindes van die toetse in afdeling 8, 16, 25 en 27, moet komponente wat deur dubbelisolasie of versterkte isolasie van lewendige dele geskei word, geignoreer word; verbinding van toeganklike metaaldele met 'n aardingsaansluiter of aardingskontak beteken nie dat dit nie nodig is om hierdie toetse uit te voer nie.

4.6 Indien 'n klas OI of 'n klas I-toestel toeganklike geleidende dele het wat nie met 'n aardingsaansluiter verbind is nie en wat nie van lewendige dele geskei is deur 'n tussenmetaaldeel wat met 'n aardingsaansluiter verbind is nie, moet sodanige dele nagegaan word vir voldoening aan die toepaslike vereistes wat vir klas II-toestelle gespesifiseer is.

4.7 Tensy daar anders gespesifiseer word, moet enige dele van 'n klas O-, OI-, I- of II-toestel wat by ekstra lae veiligheidspanning werk, nagegaan word vir voldoening aan die toepaslike vereistes wat vir klas III-toestelle gespesifiseer word.

4.8 In die geval van 'n toestel met 'n elektroniese baan, geld die bykomende vereistes in B-3 van aanhangsel B.

5. AANSLAGWAARDES

5.1 Die maksimum aangeslane spanning moet 250 V vir verplaasbare enkelfasige ws.-toestelle en verplaasbare gs.-toestelle en 440 V vir alle ander toestelle wees.

6. KLASSIFIKASIE

6.1 'n Toestel moet geklassifiseer word

(a) volgens die mate van beveiliging teen elektriese skok as
- Klas O;
- Klas OI;
- Klas I;
- Klas II; of
- Klas III;

perature of which may be either fixed or adjustable and that, during normal use, keeps the temperature between predetermined limits.

Tool. A tool within the normal meaning of the word; also a coin or any other object which may be used to operate a screw or other fixing device of an appliance.

Unfavourable. Descriptive of the condition most likely to cause an appliance/component to fail the test.

Working voltage. The maximum voltage to which the component under consideration is subjected when the appliance is operating at its maximum rated voltage under conditions of normal use, including changes in circuit configuration imposed by such likely occurrences as the operation of a circuit breaker or the failure of a lamp.

3. GENERAL REQUIREMENT

3.1 Construction of Appliances. Appliances shall be free from electrical and mechanical hazards, including sharp edges, burrs and similar defects that might cause injury to a user. Conductors and accessories shall be so attached as to enable the appliances to maintain safety throughout their useful lives.

4. GENERAL NOTES ON TESTS

4.1 If the test results are influenced by the temperature of the ambient air, that temperature shall be maintained at 20 ± 5 °C, except that, if the temperature attained by any part is limited by a temperature-sensitive device, or is influenced by the temperature at which a change of state occurs—for example the temperature of boiling water—the ambient temperature shall be maintained at 23 ± 2 °C.

4.2 An appliance shall, unless otherwise marked (see 7.1 (*c*)), be tested with A.C. of frequency, 50 Hz. An appliance with more than one rated voltage shall be tested at the upper limit of the range except that an appliance that incorporates one or more motors shall be tested at the minimum, mean, and maximum limits of the voltage range.

4.3 An appliance provided with a thermostat, a regulating device, or a similar control, whose setting can be altered by the user and the means of adjusting the control is accessible without the aid of a tool and is not sealed to prevent alteration of the setting, shall be tested with the control(s) adjusted to the most unfavourable setting.

4.4 An appliance intended to be operated at safety extra-low voltage and sold with the necessary supply transformer, shall be tested with that supply transformer.

4.5 For the purposes of the tests given in sections 8, 16, 25, and 27, components separated from live parts by double insulation or reinforced insulation shall be ignored; connection of accessible metal parts to an earthing terminal or earthing contact shall not obviate the necessity for carrying out these tests.

4.6 If a Class OI or a Class I appliance has accessible conductive parts that are not connected to an earthing terminal and are not separated from live parts by an intermediate metal part which is connected to an earthing terminal, such parts shall be checked for compliance with the appropriate requirements specified for Class II appliances.

4.7 Unless otherwise specified, if a Class O, OI, I, or II appliance has parts that operate at safety extra-low voltage, such parts shall be checked for compliance with the appropriate requirements specified for Class III appliances.

4.8 In the case of an appliance that incorporates an electronic circuit, the additional requirements given in B-3 of Annexure B shall apply.

5. RATING

5.1 The maximun rated voltage shall be 250 V for portable single-phase a.c. appliances and for portable d.c. appliances, and 440 V for all other appliances.

6. CLASSIFICATION

6.1 An appliance shall be classified

(a) according to its degree of protection against electric shock as
- Class O;
- Class OI;
- Class I;
- Class II; or
- Class III;

OPM.: Die feit dat 'n klas III-toestel saam met 'n afsonderlike transformator vir werking by netspanning verkoop word, verander nie aan die klassifikasie van hierdie toestel nie

(b) volgens die mate van beskerming teen vog as
gewoon,
drupdig,
spatdig,
waterdig.

7. MERKE EN ETIKETTERING

7.1 Die volgende besonderhede moet op 'n toestel aangebring wees

(a) Die aangeslane spanning(s) of aangeslane spanningsbestek, in volt, maar in die geval van 'n toestel met slegs afhaalbare verhittingselemente, is die aanbring van hierdie besonderhede opsioneel;

(b) indien toepaslik, 'n simbool vir die aard van die toevoer, langs die aangeslane spanning.

(c) tensy die toestel slegs vir gs ontwerp is of vir ws by frekwensies van 50 Hz en 60 Hz, die aangeslane frekwensie of aangeslane frekwensiebestek, in hertz;

(d) mits die aangeslane inset nie 25 W oorskry nie, die aaangeslane inset in watt of kilowatt of die aangeslane stroom in ampère (kyk ook 7.5);
OPM.: Die aangeslane inset of stroom wat op die toestel aangebring moet word, is die totale maksimum inset of stroom wat op dieselfde tyd in die baan kan wees.

(e) in die geval van 'n toestel met 'n sekering, die aangeslane stroom van die toepaslike sekering, in ampère, en, indien die sekering van die tydvertraagtipe is, die tydvertraging;

(f) in die geval van 'n klas II-toestel, die simbool vir klas II-konstruksie;

(g) die simbool vir die mate van beskerming teen vog, indien dit nie die gewone is nie;

(h) in die geval van 'n toestel vir
(1) korttermyn werking, die aangeslane werktyd;
(2) onderbroke werking, die aangeslane werktyd en die aangeslane rustyd.

7.2 Indien bykomende besonderhede aangegee word, moet die merke wat daarvoor gebruik word, sodanig wees dat dit geen misverstand kan meebring nie. Hierbenewens,

(a) indien die motor van 'n toestel wikkelinge het met 'n klas F- of H-isolasie, moet dié feit aangedui word;

(b) indien die motor van 'n toestel afsonderlik gemerk word, moet die merke op die toestel en dié op die motor sodanig wees dat daar geen twyfel kan bestaan oor die aanslag van die toestel self nie; en

(c) moet die aangeslane spanning, in volt, en die aangeslane kapasitansie, in μF, van 'n kapasitor daarop aangebring wees.

7.3 Die volgende besonderhede moet op 'n afhaalbare verhittingselement aangebring wees:

(a) Die aangeslane spanning(s) of aangeslane spanningsbestek, in volt;

(b) die aangeslane inset indien dit groter as 25 W is, in watt of kilowatt (kyk ook 7.5); en

(c) die simbool vir die mate van beskerming teen vog, indien dit nie die gewone is nie.

7.4 Indien 'n toestel op verskillende aangeslane spannings of verskillende aangeslane insetwaardes ingestel kan word, moet die spanning of inset waarop die toestel ingestel is, maklik en duidelik sigbaar wees. In die geval van 'n toestel waar veranderings in die spanningstelling nie dikwels vereis word nie, word daar geag dat daar aan hierdie vereiste voldoen is indien die aangeslane spanning of die aangeslane inset waarop die toestel ingestel is, bepaal kan word van 'n bedradingsdiagram wat aan die toestel bevestig is. Die bedradingsdiagram kan aan die binnekant van 'n dekstuk wees wat afgehaal moet word om die toevoergeleiers te verbind of so nie, op 'n kaart wat aan die dekstuk vasgeklink is of op 'n papier- of soortgelyke etiket wat aan die dekstuk vasgelym is, maar dit mag nie op 'n etiket wees wat los aan die toestel bevestig is nie.

7.5 In die geval van 'n toestel of afhaalbare verhittingselement waarop meer as een aangeslane spanning of aangeslane spanningbestek aangegee word, moet die aangeslane inset vir elk van hierdie spannings of bestekke aangegee word, indien dit groter as 25 W is.

Die boonste en onderste grense van die aangeslane inset moet op so 'n wyse op die toestel of afhaalbare verhittingselement aangebring wees dat die verhouding tussen die inset en spanning duidelik blyk, maar indien die verskil tussen die grense van 'n aangeslane spanningsbestek nie 10% van die gemiddelde waarde van die bestek oorskry nie, kan die merk vir die aangeslane inset in verband gebring word met die gemiddelde waarde van hierdie bestek.

Indien die inset van die toestel of afhaalbare verhittingselement, wanneer dit koud is, met meer as 25% verskil van die inset by werktemperatuur, moet albei insetwaardes aangegee word. Die inset in die koue toestand moet tussen hakies na die inset by werktemperatuur aangegee word.

NOTE: The fact that a Class II appliance is sold complete with a separate transformer for operation at mains voltage does not alter the classification of this appliance.

(b) according to its degree of protection against moisture as ordinary;
drip-proof;
splashproof;
watertight.

7. MARKING AND LABELLING

7.1 An appliance shall be marked with

(a) the rated voltage(s) or rated voltage range(s) in volts, except that in the case of an appliance with detachable heating elements only, this marking shall be optional;

(b) if applicable, a symbol for the nature of the supply, placed next to the marking for rated voltage;

(c) unless the appliance is designed for D.C. only, or for A.C. of frequencies 50 Hz and 60 Hz, the rated frequency or rated frequency range, in hertz;

(d) unless the rated input does not exceed 25 W, the rated input in watts or kilowatts, or the rated current in amperes (see also 7.5);
NOTE: The rated input or current to be marked on the appliance is the total maximum input or current that can be on circuit at the same time.

(e) in the case of an appliance that incorporates a fuse, the rated current of the appropriate fuse, in amperes, and, if the fuse is of the time-lag type, the time-lag;

(f) in the case of a Class II appliance, the symbol for Class II construction;

(g) the symbol for the degree of protection against moisture, if other than ordinary;

(h) in the case of an appliance for
(1) short-time operation, the rated operating time;
(2) intermittent operation, the rated operating time and rated resting time.

7.2 Any additional markings used shall be such that they cannot give rise to misunderstanding. Further,

(a) if the motor of an appliance has windings with insulation of Class F or H, it shall be so marked;

(b) if the motor of an appliance is marked separately, the marking of the appliance and that of the motor shall be such that there can be no doubt with regard to the rating of the appliance itself; and

(c) a capacitor shall be marked with its rated voltage, in volts, and its rated capacitance, in μF.

7.3 A detachable heating element shall be marked with

(a) the rated voltage(s) or rated voltage range(s) in volts;

(b) the rated input, if greater than 25 W in watts or kilowatts (see also 7.5); and

(c) the symbol for the degree of protection against moisture, if other than ordinary.

7.4 If an appliance can be adjusted to suit different rated voltages or different rated inputs, the voltage or input to which the appliance is adjusted shall be easily and clearly discernible. For an appliance where frequent changes in voltage setting are not required, this requirement shall be deemed to be met if the rated voltage or the rated input to which the appliance is adjusted can be determined from a wiring diagram fixed to the appliance. The wiring diagram may be on the inside of a cover which has to be removed to connect the supply conductors or alternatively, on a card which is riveted to the cover, or on a paper or similar label secured to the cover by an adhesive, but it shall not be on a label loosely attached to the appliance.

7.5 For an appliance or detachable heating element marked with more than one rated voltage or rated voltage range, the rated input for each of these voltages or ranges shall be marked, if greater than 25W.

The upper and lower limits of the rated input shall be so marked on the appliance or detachable heating element that the relation between input and voltage appears distinctly, except that if the difference between the limits of a rated voltage range does not exceed 10% of the mean value of the range, the marking for rated input may be related to the mean value of this range.

If the input of the appliance or detachable heating element when cold differs by more than 25% from the input at operating temperature, both inputs shall be marked, the input in the cold condition given in brackets after the marking of the input at operating temperature.

7.6 Indien simbole gebruik word, moet hulle soos volg wees:

V	.....	volt
A	.....	ampère
Hz	.....	hertz
W	.....	watt
kW	.....	kilowatt
μF	.....	mikrofarad
ℓ	.....	liter
kg	.....	kilogram
N/cm²	.....	newton per vierkante sentimeter
N/m²	.....	newton per vierkante meter
h	.....	uur
min	.....	minute
s	.....	sekonde
~	.....	wisselstroom
3~	.....	driefasige wisselstroom
3N~	.....	driefasige wisselstroom met nulgeleier
⎓	.....	gelykstroom
	.....	aangeslane stroom van die toepaslike sekeringskakel
	.....	D-tipe tydvertraagsekeringskakel
	.....	tydvertraagminiatuursekeringskakel, waar X die simbool vir tydaanslag is
Pa	.....	pascal
	.....	klas II-konstruksie
(een druppel)	.....	drupdigte konstruksie
(een druppel binne 'n driehoek)	.....	spatdigte konstruksie
(twee druppels)	.....	waterdigte konstruksie

Die afmetings van die simbool vir klas II-konstruksie moet sodanig wees dat die lengte van die sye van die buitenste vierkant ongeveer twee maal die lengte van die sye van die binneste vierkant is. Die sye van die buitenste vierkant mag nie korter as 5 mm wees nie, maar indien die grootste afmeting van die toestel hoogstens 15 cm is, mag die sye van die buitenste vierkant nie korter as 3 mm wees nie.

Die simbool vir klas II-konstruksie moet so geplaas wees dat dit duidelik is dat dit deel van die tegniese besonderhede uitmaak en sodat dit nie met die fabrikant se naam of handelsmerk verwar kan word nie.

7.7 'n Aansluiter wat uitsluitlik vir die nulgeleier bedoel is, moet met die letter N aangedui word.

'n Aardingsaansluiter moet deur die simbool ⏚ aangedui word wat daar naby geplaas is.

Hierdie besonderhede mag nie op skroewe, verwyderbare wasters of ander dele wat verwyder kan word as geleiers verbind word, aangebring word nie.

7.8 'n Toestel wat met meer as twee toevoergeleiers verbind moet word, uitgesonderd die aardingsgeleier (wat nie 'n toevoergeleier is nie), moet van 'n bedradingsdiagram wat soos in 7.4 aan die toestel bevestig is, voorsien wees.

7.9 Tensy daar geen twyfel oor die funksie van skakelaars bestaan nie, moet skakelaars so gemerk of so geplaas wees dat daar duidelik aangedui word watter komponent hulle beheer. Merke wat vir hierdie doel gebruik word, moet verkieslik verstaan kan word sonder dat 'n kennis van tale nodig is.

7.10 Die verskillende posisies op die reëlaars en die verskillende posi-

7.6 Where symbols are used, they shall be as follows:

V	.....	volts
A	.....	amperes
Hz	.....	hertz
W	.....	watts
kW	.....	kilowatts
μF	.....	microfarads
ℓ	.....	litres
kg	.....	kilograms
N/cm²	.....	newtons per square centimetre
N/m²	.....	newtons per square metre
h	.....	hours
min	.....	minutes
s	.....	seconds
~	.....	alternating current
3~	.....	three-phase alternating current
3N~	.....	three-phase alternating current with neutral
⎓	.....	direct current
	.....	rated current of the appropriate fuse-link
	.....	time-lag D-type fuse-link
	.....	time-lag miniature fuse-link where X is the symbol for time rating
Pa	.....	pascals
	.....	Class II construction
(one drop)	.....	drip-proof construction
(one drop in a triangle)	.....	splash-proof construction
(two drops)	.....	watertight construction

The dimensions of the symbol for Class II construction shall be such that the length of the sides of the outer square is approximately twice the length of the sides of the inner square. The length of the sides of the outer square shall be not less than 5 mm, except that if the largest dimension of the appliance does not exceed 15 cm, the length of the sides of the outer square shall be not less than 3 mm.

The symbol for Class II construction shall be so placed that it is obvious that it is a part of the technical information and cannot be confused with the maker's name or trade mark.

7.7 A terminal intended exclusively for the neutral conductor shall be indicated by the letter N.

An earthing terminal shall be indicated by the symbol ⏚ placed close to it.

These indications shall not be placed on screws, removable washers or other parts which might be removed when conductors are being connected.

7.8 An appliance to be connected to more than two supply conductors, not including the earthing conductor (which is not a supply conductor), shall be provided with a wiring diagram, fixed to the appliance as in 7.4.

7.9 Unless their function cannot be mistaken, switches shall be marked or so positioned as to indicate clearly which component they control. Indications used for this purpose shall preferably be comprehensible without a knowledge of languages.

7.10 The different positions of regulating devices, and the different

IN LUMINE TUO VIDEBIMUS LUMEN
University of Fort Hare
Together in Excellence

sies van skakelaars op 'n staande toestel, moet met syfers, letters of ander visuele middele aangedui word.

Die af-posisie mag nie slegs met woorde aangedui word nie. Indien syfers gebruik word om die verskillende posisies aan te dui, moet die af-posisie aangedui word deur die simbool 0 wat nie vir enige ander merk gebruik mag word nie, en die posisie vir 'n groter lewering, inset, spoed, koeluitwerking, ens. moet deur 'n hoër syfer aangedui word.

7.11 Termostate en reëlaars wat bedoel is om tydens installasie of tydens gebruik verstel te word, moet voorsien wees van 'n aanduiding van die verstelrigting vir toename of afname in die waarde van die eienskap wat verstel word. Die simbole + en − moet vir die doel gebruik word.

7.12 Besonderhede van enige spesiale voorsorgmaatreëls wat nodig is wanneer die toestel geïnstalleer of gebruik word of albei, moet aangegee word. In die geval van 'n toestel met 'n elektroniese baan geld die vereistes van B.4.1 van aanhangsel B. 'n Aanwysingsblad wat die toestel vergesel, kan vir hierdie doel gebruik word. In die geval van 'n toestel met tipe Z-bevestiging, moet die aanwysingsblad wesenlik die volgende feite oordra: „Die toevoerkoord van hierdie toestel kan nie vervang word nie. Indien die koord beskadig is, gooi die toestel weg.".

7.13 Aanwysingsblaaie en ander boekies wat volgens hierdie spesifikasie vereis word, moet in een van die twee amptelike tale van die Republiek van Suid-Afrika wees of verkieslik in albei amptelike tale.

7.14 Die besonderhede moet leesbaar en onuitwisbaar aangebring wees en die besonderhede wat volgens 7.1 tot en met 7.5 vereis word, moet op 'n hoofdeel van die toestel of afhaalbare verhittingselement wees.

Die besonderhede op 'n vaste toestel moet duidelik van die buitekant af onderskei kan word nadat die toestel soos vir normale gebruik geplaas is, maar indien dit nodig is, na verwydering van 'n dekstuk.

Die besonderhede op ander toestelle moet duidelik van buitekant af sigbaar wees, indien dit nodig is, nadat 'n dekstuk afgehaal is, en met dien verstande dat, in die geval van staande toestel, die besonderhede slegs onder 'n dekstuk mag wees indien dit naby die aansluiters vir buitegeleiers is. In die geval van 'n verplaasbare toestel, mag die verwydering van sodanige dekstuk nie die gebruik van gereedskap vereis nie. Besonderhede op 'n verhittingselement moet duidelik gesien kan word wanneer die element uit die toestel gehaal word. Besonderhede op en aanduidings vir skakelaars, termostate, termiese uitskakelaars en ander kontrole-inrigtings, moet naby hierdie komponente geplaas wees; hulle mag nie op verwyderbare dele aangebring word indien hierdie dele op so 'n wyse teruggeplaas kan word dat die besonderhede daarop misleidend kan wees nie.

7.15 Die volgende besonderhede moet in die geval van 'n klas I-toestel aangegee word op 'n etiket wat aan die punt van die buigsame kabel of koord bevestig is of, indien 'n buigsame koord of kabel nie saam met die toestel voorsien word nie, by of naby die insetaansluiters bevestig is:

„WAARSKUWING—HIERDIE TOESTEL MOET GEAARD WEES"

„WARNING—THIS APPLIANCE MUST BE EARTHED"

of soorgelyke bewoording.

Vir klas I-toestelle, uitgesonderd dié wat bedoel is om permanent met vaste bedrading verbind te word, moet bogemelde besonderhede ook in die fabrikant se aanwysings aan gebruikers ingesluit wees.

7.16 Waar daar vereis word dat 'n toegangsdekstuk deur die gebruiker verwyder moet word ten einde eenvoudige verstellings te doen, en indien daar op dié wyse toegang tot lewendige dele verkry kan word, moet 'n permanente kennisgewing aan die buitekant van die dekstuk bevestig word met die volgende (of soortgelyke) bewoording daarop:

„VERWYDER PROP OF SKAKEL HOOFSKAKELAAR AF VOORDAT HIERDIE DEKSTUK VERWYDER WORD"

„REMOVE PLUG OR SWITCH OFF AT THE MAINS SUPPLY BEFORE REMOVING THIS COVER".

7.17 Die besonderhede op 'n naamplaat moet in alle gewone gebruikstoestande van die toestel leesbaar en onuitwisbaar bly. Nadat die naamplaat volgens 7.17.1 getoets is, moet die besonderhede nog leesbaar wees en mag die verband, in die geval van 'n kleefnaamplaat, nie omkrul nie en moet dit nog stewig aan die basisoppervlak vaskleef.

7.17.1 *Toets*. Vryf die naamplaat om die beurt 15 s lank met doeke wat geweek is in

(a) paraffien;
(b) petroleumeter; en
(c) water

en ondersoek dit dan vir voldoening aan die vereistes van 7.17.

8. BEVEILIGING TEEN ELEKTRIESE SKOK

8.1 'n Toestel moet so gemaak en omhul wees dat toevallige aanraking met lewendige dele en, in die geval van 'n klas II-toestel, met metaaldele wat slegs deur basiese isolasie van die lewendige dele geskei is, uitgesluit word. In die geval van 'n toestel met 'n elektroniese baan, geld die bepalings van B-5.1 van aanhangsel B. Volgens 8.1.1 getoets, mag dit nie moontlik wees om lewendige dele met die toetsvinger,

positions of switches on a stationary appliance, shall be indicated by figures, letters, or other visual means.

The "off" position shall not be indicated by words only. If figures are used for indicating the different positions, the "off" position shall be indicated by the symbol O which shall not be used for any other indication, and the position for a greater output, input, speed, cooling effect, etc., shall be indicated by a higher figure.

7.11 Thermostats and regulating devices intended to be adjusted during installation or in use, shall be provided with an indication for the direction of adjustment to increase or to decrease the value of the characteristic being adjusted. The symbols + and − may be used for this purpose.

7.12 Details of any special precautions necessary when installing or using the appliance or both, shall be given and, in the case of an appliance that incorporates an electronic circuit, the requirements of B-4.1 of Annexure B shall apply. An instruction sheet which accompanies the appliance may be used for the purpose. For an appliance provided with Type Z attachments, the instruction sheet shall contain the substance of the following information: "The supply cord of this appliance cannot be replaced. If the cord is damaged discard the appliance.".

7.13 Instruction sheets and other texts required by this specification shall be in either of the official languages of the Republic of South Africa, or preferably both.

7.14 Marking shall be legible and indelible, and the markings required in terms of 7.1-7.5 (inclusive) shall be on a main part of the appliance or detachable heating element.

The marking of a fixed appliance shall be clearly discernible from the outside after the appliance has been fixed as for normal use, but, if necessary, after removal of a cover.

The marking of other appliances shall be clearly discernible from the outside, if necessary after removal of a cover, and provided that, on a stationary appliance, the marking shall only be beneath a cover if it is near to the terminals for external conductors. In the case of a portable appliance, the removal of such a cover shall not require the use of a tool. Marking on a heating element shall be clearly discernible when the element is removed from the appliance. Marking on, and indications for switches, thermostats, thermal cut-outs, and other control devices, shall be positioned in the vicinity of these components; they shall not be on removable parts if these parts can be replaced in such a way that the marking becomes misleading.

7.15 On a Class I appliance the following information shall be given on a label that is attached to the end of the flexible cord or cable or, if a flexible cord or cable is not supplied with the appliance, attached to or near the input terminals:

"WARNING—THIS APPLIANCE MUST BE EARTHED"

"WAARSKUWING—HIERDIE TOESTEL MOET GEAARD WEES"

or similar wording.

For Class I appliances other than those intended to be permanently connected to fixed wiring, the above information shall also be included in the manufacturer's instructions to users.

7.16 Where an access cover is required to be removed by the user in order to make simple adjustments, and if, thereby, live parts are rendered accessible, a permanent notice shall be fixed to the outside of the cover bearing the following (or similar) wording:

"REMOVE PLUG OR SWITCH OFF AT THE MAINS SUPPLY BEFORE REMOVING THIS COVER"

"VERWYDER PROP OF SKAKEL HOOFSKAKELAAR AF VOORDAT HIERDIE DEKSEL VERWYDER WORD".

7.17 A nameplate shall remain legibly and indelibly marked under all normal conditions of use of the appliance. After the nameplate has been tested in accordance with 7.17.1, markings shall still be legible and, in the case of an adhesive nameplate, the bond shall show no curling and shall still adhere firmly to the base surface.

7.17.1 *Test*. Wipe the nameplate successively, for 15 s each, with cloths soaked in

(a) paraffin;
(b) petroleum ether; and
(c) water,

and then inspect it for compliance with the requirements of 7.17.

8. PROTECTION AGAINST ELECTRIC SHOCK

8.1 An appliance shall be so constructed and enclosed as to preclude accidental contact with live parts and, in the case of a Class II appliance, with metal parts separated from live parts by basic insulation only. In the case of an appliance that incorporates an electronic circuit, the provisions given in B-5.1 of Annexure B shall apply. When tested in accordance with 8.1.1 it shall not be possible, even after opening lids

toetspen of toetsvoelpen aan te raak nie, selfs nadat deksels en deure oopgemaak is en afhaalbare dele uitgesonderd lampe agter 'n afhaalbare dekstuk, verwyder is. Die isoleereienskappe van vernis, emalje of 'n geanodeerde deklaag, gewone papier, katoen, seëlmiddel en krale word nie as voldoende geag om beskerming teen toevallige aanraking met lewendige dele te verleen nie. 'n Selfverhardingshars mag nie as seëlmiddel beskou word nie.

8.1.1 *Toets*

(a) Apparaat

(1) *Toetsinrigtings.* 'n Standaardtoetsvinger, -toetspen en -toetsvoelpen soos onderskeidelik in fig. 1, 2 en 3 afgebeeld en 'n reguit ongelede toetsvinger met dieselfde afmetings as dié van die standaardtoetsvinger.

(2) *Voltmeter.* 'n Voltmeter met 'n weerstand van minstens 1 000 Ω/V of ander gerieflike aanwyser van dieselfde sensitiwiteit, maar by die toets van 'n elektroniese komponent moet die weerstand van die voltmeter wees soos in B-5.2 van aanhangsel B gespesifiseer.

(3) *Battery.* 6 V-12 V.

(b) Prosedure

(1) Ondersoek die toestel vir voldoening aan die vereistes van 8.1. Indien daar na 'n visuele ondersoek twyfel bestaan oor of daar kontak met lewendige dele gemaak kan word, maak seker dat die toestel geheel en al van die kragnet ontkoppel is, verbind dan die toepaslike toetsvinger, pen of voelpen (soos toepaslik) in serie met die voltmeter, met een pool van die battery. Verbind die ander pool van die battery met die lewendige aansluiter(s) of punte van die binnebedrading of albei van die toestel. Daar word geag dat uitwyking van die wyser van die voltmeter kontak aandui.

(2) Gebruik geringe krag en wend die standaardtoetsvinger en -toetspen (om die beurt) in elke moontlike rigting aan, maar, in die geval van 'n toestel wat ontwerp is vir gebruik op die vloer en 'n massa van meer as 40 kg het, sonder om die toestel te laat kantel.

(3) Toets hierbenewens met die toetspen

(i) openinge in 'n klas O- of klas II-toestel, en

(ii) openinge in 'n klas OI- of klas I-toestel uitgesonderd dié in metaaldele wat met die aardingsaansluiter of aardingskontak verbind is en dié wat toegang tot lewendige dele in kontaksokke verleen.

(4) Hierbenewens, in die geval van alle klasse toestelle, moet openinge wat verhoed dat die standaardtoetsvinger binnedring met die reguit ongelede toetsvinger getoets word wat met 'n krag van 20 N aangewend word. Indien hierdie vinger binnedring, herhaal die toets met die standaardtoetsvinger. Indien die ongelede vinger nie 'n opening binnedring wanneer 'n krag van 20 N aangewend word nie, verhoog die krag na 30 N. Indien die skerm dan verskuif word of die opening so vervorm word dat, nadat die ongelede vinger weggeneem is, die standaardvinger sonder krag ingesteek kan word, herhaal die toets met hierdie vinger.

(5) In die geval van 'n toestel uitgesonderd 'n klas II-toestel, toets met die toetsvoelpen wat met geringe krag aangewend word,

(i) die lewendige dele van elke verhittingselement wat sigbaar gloei tydens gewone gebruik en waarvan alle pole ontkoppel word deur die werking van 'n skakelaar, en

(ii) dele wat sodanige element steun en wat van die buitekant van die toestel af en sonder dat die dekstukke van die skerms verwyder word, ooglopend in aanraking met die element is.

8.2 In 'n toestel vir vel- of haarbehandeling, uitgesonderd 'n klas III-toestel met 'n aangeslane spanning van hoogstens 24 V, moet 'n metaaldeel wat tydens gewone gebruik met die vel of hare van persone of diere in aanraking is, met dubbelisolasie of versterkte isolasie van lewendige dele geskei word en mag dit nie geaard wees nie.

8.3 In 'n toestel, uitgesonderd 'n klas III-toestel, moet 'n buigsame skag wat gedurende gebruik gehanteer word, van die motorskag(te) geïsoleer word deur koppelings van isoleermateriaal met 'n elektriese sterkte wat ekwivalent is aan dié van aanvullende isolasie.

8.4 'n Bereikbare geleidende vloeistof mag nie regstreeks in aanraking met 'n lewendige deel wees nie.

8.5 Die skag van 'n werkknop, handvatsel, hefboom of handkontroleinrigting mag nie lewendig wees nie.

8.6 In 'n toestel, uitgesonderd 'n klas III-toestel, moet 'n handvatsel, hefboom of knop wat tydens gebruik gehou of geaktiveer word en waarvan die skag of toebehore lewendig kan word in geval van 'n isolasiefout, van isoleermateriaal wees of heeltemal met isoleermateriaal bedek wees.

8.7 In 'n klas O- of klas OI-toestel waarvan die handvatsel deurlopend in die hand gehou word, moet die handvatsel so gemaak wees dat wanneer dit vasgehou word soos in gebruik, dit nie moontlik is om toevallig kontak tussen die operateur se hand en enige metaaldeel wat lewendig kan word in geval van 'n isolasiefout te maak nie.

and doors and removing detachable parts other than lamps located behind a detachable cover, to touch live parts with the test finger, test pin, or test probe. The insulating properties of a lacquer, enamel, or anodized coating, ordinary paper, cotton, sealing compound, and beads, shall not be deemed to provide sufficient protection against accidental contact with live parts. A self-hardening resin shall not be regarded as sealing compound.

8.1.1 *Test*

(a) Apparatus

(1) *Testing devices.* A standard test finger, test pin, and test probe as shown in Fig. 1, 2 and 3, respectively, and a straight unjointed test finger of the same dimensions as those of the standard test finger.

(2) *Voltmeter.* A voltmeter having a resistance of at least 1 000 Ω/V or other convenient indicator of equivalent sensitivity, except that when testing an electronic component the resistance of the voltmeter shall be as specified in B-5.2 of Annexure B.

(3) *Battery.* 6 V-12 V.

(b) Procedure

(1) Inspect the appliance for compliance with the requirements of 8.1. If there is doubt after visual inspection whether contact can be made with live parts, ensure that the appliance is entirely disconnected from the supply mains, then connect the appropriate test finger, pin, or probe (as applicable) in series with the voltmeter, to one pole of the battery. Connect the other pole of the battery to the live terminal(s), or points of the inner wiring, or both, of the appliance. Consider deflection of the pointer of the voltmeter to indicate contact.

(2) Using negligible force, apply to the appliance the standard test finger and test pin (in turn) in every possible direction, but, in the case of an appliance designed for use on the floor and having a mass of more than 40 kg, without tilting the appliance.

(3) In addition, test with the test pin,

(i) apertures in a Class O or Class II appliance, and

(ii) apertures in a Class OI or Class I appliance other than those in metal parts connected to an earthing terminal or earthing contact, and those giving access to live parts in socket outlets.

(4) Further, in any class of appliance, test apertures that prevent the entry of the standard test finger by means of the straight unjointed test finger applied with a force of 20 N and, if this finger enters, repeat the test with the standard test finger. If the unjointed finger does not enter an aperture when the applied force is 20 N, increase the force to 30 N and, if the guard is then displaced or the aperture so distorted that, on removal of the unjointed finger, the standard finger can be inserted without force, repeat the test with this finger.

(5) In the case of an appliance other than of Class II, test with the test probe applied with negligible force,

(i) the live parts of each heating element that glows visibly in normal use and of which all poles are disconnected by the action of a switch, and

(ii) parts supporting such an element and that can be seen, from the outside of the appliance and without removing the covers of guards, to be in contact with the element.

8.2 In an appliance for skin or hair treatment, other than of Class III have a rated voltage not exceeding 24 V, a metal part which in normal use is in contact with the skin or hair of persons or animals, shall be separated from live parts by double insulation or reinforced insulation, and shall not be earthed.

8.3 In an appliance other than of Class III, a flexible shaft that is handled during use shall be insulated from the motor shaft(s) by couplings of insulating material of electric strength equivalent to that of supplementary insulation.

8.4 An accessible conducting liquid shall not be in direct contact with a live part.

8.5 The shaft of an operating knob, handle, lever, or manual control device shall not be live.

8.6 In an appliance other than of Class III, a handle, lever, or knob that is held or actuated during use and whose shaft or fixing(s) can become live in the event of an insulation fault, shall be either of insulating material or completely covered by insulating material.

8.7 In a Class O or Class OI appliance, a handle which in use is continuously held in the hand shall be so constructed that, when gripped as in use, it is not possible to make inadvertent contact between the operator's hand and any metal part that can become live in the event of an insulation fault.

8.8 In 'n klas II-toestel, mag 'n kapasitor nie met 'n toeganklike metaaldeel verbind wees nie en moet die kas daarvan, indien dit van metaal is, deur aanvullende isolasie van bereikbare metaaldele geskei word.

8.9 'n Toestel wat bedoel is om met 'n prop met die kragtoevoer verbind te word en wat 'n kapasitor(s) met 'n kapasitansie van meer as 0,1 μF het, moet so ontwerp wees dat, volgens 8.9.1 getoets, die spanning tussen die penne van die prop nie op enige stadium gedurende die toets 34 V oorskry nie.

8.9.1 *Toets*. Laat die toestel teen die aangeslane spanning of teen die boonste grens van die aangeslane spanningsbestek werk, soos toepaslik. Draai die toestelskakelaar, indien daar een is, na die af-posisie en gebruik die prop om die toestel van die kragtoevoer te ontkoppel. Een sekonde na ontkoppeling, meet die spanning tussen die penne van die prop met 'n instrument wat 'n geringe uitwerking het op die waarde wat gemeet word. Voer hierdie toets 10 maal uit.

9. AANSIT VAN MOTORGEDREWE TOESTELLE

9.1 Die motor van 'n motorgedrewe toestel moet sodanig wees dat enige fluktuasie wat moontlik in die toevoerspanning kan voorkom, nie sal veroorsaak dat dit aangesit word nie en volgens

(a) 9.1.1 *(a)* en, indien toepaslik, 9.1.1 *(b)* en 9.1.1 *(c)* getoets, moet die apparaat veilig werk volgens die vereistes van hierdie spesifikasie en mag oorlasbeveiligingstoestelle nie werk nie;

(b) 9.1.1 *(b)* getoets, moet die sentrifugale en ander outomatiese aansitskakelaars aanhou werk sonder onaanneemlike klappering; en

(c) 9.1.1 *(c)* getoets, moet 'n motor wat met die hand aangesit moet word, geen meganiese gevaar veroorsaak as dit in die teenoorgestelde rigting as dié wat aangedui is, gedraai word nie.

9.1.1 *Toets*. Stel die reëlaars (indien daar is) soos vir gebruik

(a) en laat die toestel tien maal onder maksimum las teen 'n spanning gelyk aan 0,85 maal die aangeslane spanning werk;

(b) en laat die toestel tien maal onder maksimum las teen 'n spanning gelyk aan 1,06 maal die aangeslane spanning werk. Laat genoeg tyd tussen agtereenvolgende werkings toe om te verhoed dat die temperatuur bo die waarde styg wat in tabel 2 aangegee word;

(c) en sit elke motor wat met die hand aangesit moet word, aan in die rigting wat aangedui word en probeer dit dan in die teenoorgestelde rigting aan te sit.

9.2 By die toets van 'n motorgedrewe toestel volgens 9.2.1, mag die silwer draad nie smelt nie, mag geen oorlasbeveiligingstoestel in werking tree nie en mag die aansitstroom nie 'n snelwerksekering laat smelt nie.

9.2.1 *Toets*. Verbind die toestel in serie met 'n silwer draad, met 'n silwergehalte van minstens 99,9% (m/m), wat 85 ± 2 mm lank is en met 'n diameter van die toepaslike waarde in tabel 1 aangegee, en wat oor die dwarsmiddellyn van 'n doos waarvan die binneafmetings ongeveer 80 mm × 80 mm × 150 mm is, strek.

TABEL 1—DIAMETER VAN SILWERDRAAD

1	2	3
Aangeslane stroom van sekering, A	Nominale diameter van silwerdraad, mm	
	Aansittyd hoogstens 1 s	Aansittyd bo 1 s
10	0,29	0,39
16	0,39	0,52
20	0,46	0,60
25	0,53	0,66

Belas die toestel met die maksimum las; skakel die verhittingselemente in die toestel aan, maar moet dit nie met die afsonderlike kragtoevoer verbind nie.

Laat die toestel tien maal werk by 'n spanning wat gelyk is aan 0,9 maal die aangeslane spanning en dan tien maal by 'n spanning wat gelyk, is aan 1,1 maal die aangeslane spanning. Laat genoeg tyd tussen agtereenvolgende aansitwerkings verstryk om te verhoed dat die temperatuur bo die temperatuurwaarde styg wat in tabel 2 aangegee is of laat 'n tussenpose van minstens 5 minute toe, watter tydperk ook al die langste is.

10. INSET EN STROOM

10.1 Volgens 10.1.1 getoets, mag die inset van 'n toestel en dié van 'n afhaalbare verhittingselement met hoogstens 10% van die aangeslane inset verskil.

10.1.1 *Toets*. Stel elke verstelbare kontrole op sy maksimum posisie en laat die toestel of afhaalbare verhittingselement by die maksimum aangeslane spanningsbestek, soos toepaslik, werk in toestande van vol-

8.8 In a Class II appliance, a capacitor shall not be connected to an accessible metal part, and its casing, if of metal, shall be separated from accessible metal parts by supplementary insulation.

8.9 An appliance intended to be connected to the power supply by means of a plug, and that incorporates capacitor(s) of capacitance greater than 0,5 μF, shall be so designed that, when tested in accordance with 8.9.1, the voltage between the pins of the plug does not, at any stage of the test, exceed 34 V.

8.9.1 *Test*. Operate the appliance at rated voltage, or at the upper limit of the rated voltage range, as relevant. Move the appliance switch, if any, to the "off" position and, by means of the plug, disconnect the appliance from the power supply. One second after disconnection measure the voltage between the pins of the plug with an instrument that has a negligible effect on the value to be measured. Conduct this test ten times.

9. STARTING OF MOTOR-OPERATED APPLIANCES

9.1 The motor of a motor-operated appliance shall be such that any fluctuation liable to occur in the supply voltage does not cause it not to start and, when tested in accordance with

(a) 9.1.1 *(a)* and, if applicable 9.1.1 *(b)* and 9.1.1 *(c)*, the appliance shall operate safely in accordance with the requirements of this specification and overload protection devices shall not operate;

(b) 9.1.1 *(b)*, centrifugal and other automatic starting switches shall continue to operate without unacceptable chattering; and

(c) 9.1.1 *(c)*, a motor that has to be started by hand shall cause no mechanical danger if it is turned in the opposite direction to that indicated.

9.1.1 *Test*. With regulating devices (if any) set as in use,

(a) operate the appliance with its maximum load ten times at a voltage equal to 0,85 times the rated voltage;

(b) operate the appliance with its maximum load ten times at a voltage equal to 1,06 times the rated voltage, allowing a long enough interval between consecutive starts to prevent temperature rises in excess of those given in Table 2;

(c) start each motor that has to be started by hand in the direction indicated, and then attempt to start it in the opposite direction.

9.2 When a motor-operated appliance is tested in accordance with 9.2.1, the silver wire shall not melt, no overload protection device shall operate, and the starting current shall not blow a quick-acting fuse.

9.2.1 *Test*. Connect the appliance in series with a silver wire having a silver content at least 99,9% (m/m), a length of 85 ± 2 mm, and a diameter of the appropriate value given in Table 1, and that is stretched along the transverse centre line of a box with inside dimensions of approximately 80 mm × 80 mm × 150 mm long.

TABLE 1—DIAMETER OF SILVER WIRE

1	2	3
Rated current of fuse, A	Nominal diameter of silver wire, mm	
	Starting time not exceeding 1 s	Starting time exceeding 1 s
10	0,29	0,39
16	0,39	0,52
20	0,46	0,60
25	0,53	0,66

Load the appliance with its maximum load; switch on heating elements incorporated in the appliance but do not connect them to a separate power supply.

Start the appliance ten times at a voltage equal to 0,9 times the rated voltage, and ten times at a voltage equal to 1,1 times the rated voltage, allowing a long enough interval between consecutive starts to prevent temperature rises in excess of those given in Table 2 or an interval of at least 5 min, whichever is the longer period.

10. INPUT AND CURRENT

10.1 When tested in accordance with 10.1.1, the input of an appliance and of a detachable heating element shall not differ from the rated input by more than 10%.

10.1.1 *Test*. Set each adjustable control to its maximum position, and operate the appliance or detachable heating element at maximum rated voltage or at the maximum of the rated voltage range, as relevant, un-

doende hittevrystelling totdat die inset gestabiliseer is, en meet die inset van die toestel. In die geval van 'n toestel waarin die motorlading gedurende die werksiklus wissel, bv. wenteldroërs en versappers, meet die inset met 'n wattuurmeter en bepaal dit as die gemiddelde waarde van die inset wat voorkom gedurende twee werksiklusse of 'n tydperk van 10 minute, watter een ook al die langste is.

In die geval van 'n toestel of afhaalbare verhittingselement met een of meer aangeslane spanningsbestekke, meet die inset by die boonste sowel as die onderste grens van elke bestek tensy die aangeslane inset verband hou met die gemiddelde waarde van die toepaslike spanningsbestek, in welke geval die inset gemeet moet word by 'n spanning wat gelyk is aan die gemiddelde waarde van hierdie bestek.

11. VERHITTING

11.1 'n Toestel en sy omgewing mag nie buitensporige temperature tydens gebruik bereik nie. Volgens 11.1.1 getoets, mag die temperatuurstyging nie die toepaslike waardes in tabel 2 oorskry nie, mag seëlmiddel, indien daar is, nie daaruit loop nie en mag die termiese uitskakelaars nie in werking tree nie. Hierbenewens moet enige termiese kontrole aan die vereistes van aanhangsel A voldoen.

11.1.1 *Toets*

(a) Toestoestande

(1) Hang 'n toestel wat met die hand gehou word, in die normale werkposisie in stil lug op.

(2) Plaas 'n verhittingstoestel in 'n toetshoek wat bestaan uit twee mure haaks op mekaar, 'n vloer en, indien nodig (kyk 11.1.1 *(a)* (6)), 'n plafon wat almal gemaak is van laaghout wat 20 mm dik is en mat swart geverf is.

(3) Bou 'n toestel wat bedoel is om ingebou te word, in.

(4) Plaas 'n toestel wat bedoel is vir gebruik op 'n vloer of tafel, so na moontlik aan die mure.

(5) Monteer 'n muurgemonteerde toestel teen 'n muur en so na moontlik aan die aangrensende muur, vloer en plafon, soos in die fabrikant se aanwysings gespesifiseer.

(6) Monteer 'n hangtoestel teen 'n plafon en so na moontlik aan die aangresende mure as wat in die fabrikant se aanwysings gespesifiseer word.

(7) Tensy daar anders in die fabrikant se aanwysings gespesifiseer word, plaas 'n motorgedrewe toestel so ver moontlik van die mure af.

(8) Laat 'n verhittingstoestel in toestande van voldoende hittevrystelling met alle hitte-elemente in die baan werk by 'n toevoerspanning wat sodanig is dat die inset 1,15 maal die maksimum aangeslane inset is.

(9) Laat 'n motorgedrewe toestel teen 'n spanning van 0,94 maal die minimum aangeslane spanning en 1,06 maal die maksimum aangeslane spanning werk.

(10) Laat 'n gekombineerde toestel soos volg werk:

(i) Met die motor(e) by 1,06 maal die maksimum aangeslane spanning en afhaalbare verhittingselemente by 1,15 maal die maksimum aangeslane inset.

(ii) Met die motor(e) by 0,94 maal die minimum aangeslane spanning en die afhaalbare verhittingselemente by 0,90 maal die minimum aangeslane inset.

(11) In die geval van motorgedrewe en gekombineerde toestelle, maak seker dat die wikkelings aan die begin van die toets by 'n temperatuur van 25 ± 5°C is.

(12) Laat die toestel soos volg werk en let op die werklike looptyd:

(i) Toestelle vir korttermynwerking vir die aangeslane werktyd;

(ii) toestelle vir onderbroke werking vir agtereenvolgende werksiklusse totdat bestendige toestande bereik is, waar die „aan-" en „af-" tydperke die aangeslane „aan-" en „af-" tydperke is;

(iii) toestelle vir deurlopende werking totdat bestendige toestande bereik is.

(b) Prosedure. Volg die termokoppel- of weerstandmetode beskryf in bylae 11 van Goewernmentskennisgewing R.1615 van 22 Oktober 1965 om die temperatuurstyging in bogemelde toestande van die verskillende dele gespesifiseer in tabel 2 deurlopend te monitor.

der conditions of adequate heat discharge until the input has stabilized, then measure the input of the appliance. In the case of an appliance in which the motor load varies throughout the operating cycle, e.g. spin driers and liquidizers, measure the input by means of a watt-hour meter and determine it as the mean value of the input occurring during two operating cycles or a period of ten minutes, whichever is the longer.

In the case of an appliance or detachable heating element that is marked with one or more rated voltage ranges, measure the input at both the upper and lower limits of each range unless the marking of the rated input is related to the mean value of the relevant voltage range, in which case measure the input at a voltage equal to the mean value of that range.

11. HEATING

11.1 An appliance and its surroundings shall not attain excessive temperatures in use. When tested in accordance with 11.1.1 the temperature rises shall not exceed the relevant values given in Table 2, sealing compound, if any, shall not flow out, and thermal cut-outs shall not operate. In addition, a thermal control shall comply with the requirements of Annexure A.

11.1.1 *Test*

(a) Test conditions

(1) Suspend a hand-held appliance, in its normal working position, in still air.

(2) Place a heating appliance in a test corner consisting of two walls at right angles, a floor, and if necessary (see 11.1.1 *(a)* (6)), a ceiling, all of 20 mm thick plywood painted dull black.

(3) Build in an appliance that is intended to be built-in.

(4) Place an appliance intended for use on a floor or table as near to the walls as possible.

(5) Mount a wall-mounting appliance on a wall and as near to the adjoining wall, floor and ceiling, as specified in the manufacturer's instructions.

(6) Mount a pendant appliance on a ceiling, and as close to adjoining walls as is specified in the manufacturer's instructions.

(7) Unless otherwise specified in the manufacturer's instructions, place a motor-operated appliance as far as possible from any walls.

(8) Operate a heating appliance under conditions of adequate heat discharge with all heating elements in circuit, and with the supply voltage such that the input is 1,15 times maximum rated input.

(9) Operate a motor-operated appliance at a voltage of 0,94 times minimum rated voltage and 1,06 times maximum rated voltage.

(10) Operate a combined appliance as follows:

(i) With motor(s) at 1,06 times maximum rated voltage and detachable heating elements at 1,15 times maximum rated input.

(ii) With motor(s) at 0,94 times minimum rated voltage and detachable heating elements at 0,90 times minimum rated input.

(11) In the cases of motor-operated and combined appliances ensure that, at the beginning of a test, the windings are at a temperature of 25 ± 5 °C.

(12) Operate an appliance as follows and note the actual running time:

(i) Appliances for short-time operation for the rated operating time;

(ii) appliances for intermittent operation for consecutive cycles of of operation, until steady conditions are established, the "on" and "off" periods being the rated "on" and "off" periods;

(iii) appliances for continuous operation until steady conditions are established.

(b) Procedure. Monitor continuously, using the thermocouple or resistance method described in Schedule 11 of Government Notice R.1615 dated 22 October 1965, the temperature rise under the above conditions of the various parts specified in Table 2.

TABEL 2—TEMPERATUURSTYGGRENSE

1	2
Dele	Temperatuurstyging, °C, maks.
*Wikkelings**, indien die wikkelisolasie	
van klas A-materiaal is†	75(65)
van klas E-materiaal is†	90(80)
van klas B-materiaal is†	95(85)
van klas F-materiaal is‡	115
van klas H-materiaal is‡	140
Penne van toestelkontaksokke	
vir baie warm toestande	130
vir warm toestande	95
vir koue toestande	40
Aansluiters, met inbegrip van aardingsaansluiters, vir buitegeleiers van staande toestelle tensy van koorde voorsien	60
Aansluiters en afsluitings van tipe M-, tipe Y- en tipe Z-vasbegting vir kragtoevoerkoorde sonder	
T-merke	35
vir kragtoevoerkoorde met T-merke†	T−25
Skakelaars en termostate gemerk met afsonderlike aanslagwaardes	
sonder T-merke	30
met T-merke†	T−25
Rubber- en polivinielchloriedisolasie van binne- en buitebedrading en buigsame koorde	
sonder T-merke	50
met T-merke	T−25
Koordmantel gebruik as aanvullende isolasie	35
Rubber gebruik vir pakstukke of ander dele, wat by agteruitgang afbreuk kan doen aan die veiligheid wanneer dit as aanvullende isolasie of as versterkte isolasie gebruik word	40
in ander gevalle	50
Lamphouers met T-merke‡	T−25
Lamphouers E26, E27	
metaal- of keramiektipe	160
geïsoleerde tipe, uitgesonderd keramiektipe	120
Lamphouers E14, B15 en B22	
metaal- of keramiektipe	130
geïsoleerde tipe, uitgesonderd keramiektipe	90
Materiaal wat gebruik word as isolasie, uitgesonderd vir drade en wikkelings§	
geïmpregneerde of verniste tekstiel, papier of persbord	70
lamelle gelym met—	
melamienformaldehied, fenolformaldehied of fenolfurfuraalhars	85(175)
ureumformaldehiedhars	65(150)
vormstukke van—	
fenolformaldehied met sellulosevulstof	85(175)
fenolformaldehied met mineralevulstof	100(200)
melamienformaldehied	75(150)
ureumformaldehied	65(150)
termoplastiese materiaal¶	
suiwer mika en diegesinterde keramiekmateriaal gebruik as aanvullende of versterkte isolasie	400
poliëster met glasveselversterking	110
silikoonrubber	145
politetrafluoroetileen	265
hout, oor die algemeen	65
vir staande toestelle wat waarskynlik oor lang tydperke ononderbroke gaan werk	60
	65

TABLE 2—TEMPERATURE RISE LIMITS

1	2
Parts	Temperature rise, °C, max.
*Windings**, if the winding insulation is	
of Class A material†	75(65)
of Class E material†	90(80)
of Class B material†	95(85)
of Class F material‡	115
of Class H material‡	140
Pins of appliance inlets	
for very hot conditions	130
for hot conditions	95
for cold conditions	40
Terminals, including earthing terminals, for external conductors of stationary appliances unless provided with cords	60
Terminals for and terminations of Type M, Type Y, and Type Z attachments for power supply cord without	
T-marking	35
for power supply cord with T-marking‡	T−25
Switches and thermostats marked with individual ratings	
without T-marking	30
with T-marking‡	T−25
Rubber and polyvinyl chloride insulation of internal and external wiring and flexible cords	
without T-marking	50
with T-marking	T−25
Cord sheath used as supplementary insulation	35
Rubber used for gaskets or other parts; the deterioration of which can impair safety	
when used as supplementary insulation or as reinforced insulation	40
in other cases	50
Lampholders with T-marking‡	T−25
Lampholders E26, E27	
metal or ceramic type	160
insulated type, other than ceramic	120
Lampholders E14, B15, and B22	
metal or ceramic type	130
insulated type, other than ceramic	90
Material used as insulation other than for wires and windings§	
impregnated or varnished textile, paper or press board	70
laminates bonded with—	
melamine-formaldehyde, phenol-formaldehyde or phenol-furfural resins	85(175)
urea-formaldehyde resin	65(150)
mouldings of—	
phenol-formaldehyde with cellulose fillers	85(175)
phenol-formaldehyde with mineral fillers	100(200)
melamine-formaldehyde	75(150)
urea-formaldehyde	65(150)
thermoplastic material¶	
pure mica and tightly sintered ceramic material used as supplementary or reinforced insulation	400
polyester with glass-fibre reinforcement	110
silicone rubber	145
polytetrafluoroethylene	265
wood, in general	65
for stationary appliances liable to be operated continuously for long periods	60
	65

University of Fort Hare
Together in Excellence

1	2
Dele	Temperatuurstyging, °C. maks.
Buiteoppervlak van kapasitors	
met merke van maksimum werktemperatuur‡	T−35
sonder merke van maksimum werktemperatuur, en klein keramiekkapasitors vir radio- en televisiesteuringsonderdrukking	50
ander kapasitors	20
Buitesomhulsel van toestelle sonder verhittingselemente, uitgesonderd handvatsels wat tydens gebruik vasgehou word	60
Handvatsels, knoppe en grepe wat die hele tyd tydens gebruik gehou word (bv. soldeerysters)	
van metaal	30
van porselein of verglaasde materiaal	40
van gevormde materiaal, rubber of hout	50
Handvatsels, knoppe en grepe wat slegs vir kort rukke tydens gebruik in die hand gehou word (bv. van skakelaars)	
van metaal	35
van porselein of verglaasde materiaal	45
van gevormde materiaal, rubber, of hout	60
Dele in aanraking met olie met 'n flitspunt van t °C	T−50
Steunstukke, mure, plafon en vloer van die toetshoek	65
Enige plek van moontlike draadisoleerkontak binne 'n aansluitkas vir verbinding met buitegeleiers van 'n staande toestel tensy van koorde voorsien	50
draad met 'n T-aanslag‡	T−25

* Om voorsiening te maak vir die feit dat die temperatuur van wikkelings van universele motore, relês en solenoïdes gewoonlik onder die gemiddelde is van die punte wat met die termokoppels bereik kan word, geld die syfers sonder hakies wanneer die weerstandmetode gevolg word en dié tussen hakies wanneer termokoppels gebruik word. Vir die wikkelings van vibratorspoele en gs.-motore geld die syfers sonder hakies in albei gevalle. Vir 'n motor wat heeltemal omhul is, met wikkelingisolasie van klas A, B of E, kan die stygwaardes in die tabel met 5 °C verhoog word.

† *Voorbeelde* van klas A-materiaal is: Gelimpregneerde katoen, sy, kunsey en papier, emaljes met 'n basis van olie- of poliamiedhars.
Voorbeelde van klas B-materiaal is: Asbes, glasvesel, melamien- en fenolformaldehiedhars.
Voorbeelde van klas E-materiaal is:
(*a*) Vormstukke met selluloosevulstof, katoenstoflamelle en papierlamelle, gelym met melamienformaldehied, fenolformaldehied of fenolfurfuraalhars;
(*b*) kruisverbinde poliësterhars, selluloosetriasetaatvelle, poliëtileentereftalaatvelle;
(*c*) verniste poliëtileentereftalaat gelym met oliegemodifiseerde alkiedharsvernis;
(*d*) emalje met 'n basis van polivinielformal-, poliuretaan- of epoksihars.

‡ T dui die maksimum werktemperatuur aan.

§ Die waardes tussen hakies geld indien die materiaal vir handvatsels, knoppe en grepe gebruik word en in aanraking met warm metaal is.

¶ Daar is geen spesifieke grens vir termoplastiese materiaal wat die toetse in 30.1 of 30.2 moet deurstaan nie, vir welke doel die temperatuurstyging bepaal moet word.
Indien hierdie of ander materiaal gebruik word, mag hulle nie gebruik word by temperature wat hoër is as die termiese vermoëns van die materiaal soos vasgestel volgens verouderingstoetse wat op die materiaal self uitgevoer is nie.

1	2
Parts	Temperature rise, °C. max.
Outer surface of capacitors	
with marking of maximum operating temperature‡	T−5
without marking of maximum operating temperature, and small ceramic capacitors for radio and television interference suppression	50
other capacitors	20
External enclosure of appliances without heating elements, except handles held in use	60
Handles, knobs, and grips which, in use, are continuously held (e.g. of soldering irons)	
of metal	30
of porcelain or vitreous material	40
of moulded material, rubber or wood	50
Handles, knobs and grips which, in use, are held for short periods only (e.g., of switches)	
of metal	35
of porcelain or vitreous material	45
of moulded material, rubber or wood	60
Parts in contact with oil having a flash-point of t °C	t-50
Supports, walls, ceiling and floor of the test corner	65
Any point of possible wire insulation contact within a terminal box for connection to external conductors of a stationary appliance unless provided with cords	50
if T rate wire‡	T−25

* To allow for the fact that the temperature of windings of universal motors, relays, and solenoids is usually below the average of the points accessible to thermocouples, the figures without brackets apply when the resistance method is used and those within brackets apply when thermocouples are used. For the windings of vibrator coils and a.c. motors the figures without brackets apply in both cases. For a totally enclosed motor with winding insulation of Class A, B, or E the rise values given in the table may be increased by 5 °C.

† *Examples* of Class A materials are: Impregnated cotton, silk, artificial silk and paper, enamels based on oleo- or polyamide resins.
Examples of Class B materials are: Asbestos, glass fibre, melamine and phenol formaldehyde resins.
Examples of Class E materials are:
(*a*) Moulding with cellulose fillers, cotton fabric laminates and paper laminates, bonded with melamine-formaldehyde, phenol-formaldehyde, or phenol-furfural resins;
(*b*) cross-linked polyester resins, celluose triacetate films, polyethylene terephthalate films;
(*c*) varnished polyethylene terephthalate textile bonded with oil-modified alkyd resin varnish;
(*d*) enamels based on polyvinylformal, polyurethane or epoxy resins.

‡ T signifies the maximum operating temperature.

§ The values in brackets apply, if the material is used for handles, knobs, and grips and is in contact with hot metal.

¶ There is no specific limit for thermoplastic material which must withstand the tests specified in 30.1 or 30.2, for which purpose the temperature rise shall be determined.
If these or other materials are used, they shall not be employed at temperatures in excess of the thermal capabilities of the materials as determined by aging tests conducted on the materials themselves.

(c) *Berekening van temperatuurstyging in wikkelings.* Bereken die waarde van die temperatuurstyging in 'n koperwikkeling aan die hand van die formule:

$$t = \frac{R_2 - R_1}{R_1} (234{,}5 + t_1) - (t_2 - t_1),$$

waar t = die temperatuurstyging, °C
R_1 = die weerstand daarvan aan die begin van die toets, Ω
R_2 = die weerstand daarvan aan die einde van die toets, Ω
t_1 = die omgewingstemperatuur aan die begin van die toets, °C
t_2 = die omgewingstemperatuur aan die einde van die toets, °C

12. WERKING ONDER OORLASTOESTANDE VAN TOESTELLE MET VERHITTINGSELEMENTE

12.1 'n Toestel met een of meer verhittingselemente moet so ontwerp en gemaak wees dat dit oorbelastings wat waarskynlik in gewone gebruik kan voorkom, sal deurstaan. Volgens 12.1.1 en, indien toepaslik, 12.1.2 getoets, mag 'n nie-selfstel- termiese uitskakelaar wat slegs met behulp van gereedskap bereik of heringestel kan word, of waar vereis word dat 'n komponent vervang moet word, nie werk nie, mag geen damp of brandbare gas gedurende die toets in die toestel ophoop nie en mag die toestel aan die einde van die toets geen teken van beskadiging toon wat afbreuk doen aan sy vermoë om aan die vereistes van hierdie spesifikasie te voldoen nie. Veral verhittingsdrade, binnebedrading en die algemene saamstel mag nie in so 'n mate vervorm word dat die kruipafstande en vry ruimtes tot onder die waardes gespesifiseer in 29.1 verminder nie, en die kontakte en verbindings mag nie losgeraak het nie.

12.1.1 *Toets A*

(a) *Toetstoestande*

(1) Indien 'n selfherstel- termiese uitskakelaar of 'n nie-selfherstel-termiese uitskakelaar wat bereikbaar is en wat sonder die hulp van gereedskap heringestel kan word, werk, word daar geag dat die werktyd afgeloop het. Laat die toestelle afkoel en stel die uitskakelaar in vir die volgende siklus.

(2) Die afkoeltyd tussen siklusse kan verkort word deur drukkoeling te gebruik.

(3) Indien 'n toestel 'n motor het waarvan die werking die inset na die verhittingselement kan beinvloed, laat die motor by sy aangeslane spanning en onder gewone belasting van 'n afsonderlike toevoer af werk.

(b) *Prosedure.* Monteer of plaas die toestel soos in 11.1.1 *(a)* gespesifiseer en onderwerp dit aan 15 werksiklusse. Elke siklus bestaan uit 'n werktyd soos in 11.1.1 *(a)* (12) gespesifiseer, in toestande van voldoende hittevrystelling gevolg deur 'n afkoeltyd wat lank genoeg is sodat die toestel tot ongeveer ongewingstemperatuur kan afkoel. Plaas alle verhittingselemente wat op 'n slag kan werk, in die baan en stel die toevoerspanning sodat die inset soos volg is:

(1) Toestelle met 'n aangeslane inset van hoogstens 100 W: 1,33 maal die aangeslane inset;

(2) toestelle met 'n aangeslane inset van meer as 100 W: 1,27 maal die aangeslane inset of 1,21 maal die aangeslane inset plus 12 W, watter ook al die meeste is.

12.1.2 *Toets B.* In die geval van 'n toestel wat voorsien is van 'n drukskakelaar, herhaal die toets in 12.1.1, maar met werk- en afkoeltydperke wat elk ongeveer 5 minute duur, en onderbreek die stroom deur die werkdruk te beheer.

13. ELEKTRIESE ISOLASIE EN LEKSTROOM BY WERKTEMPERATUUR

13.1 By werktemperatuur moet die elektriese isolasie van 'n toestel, uitgesonderd 'n motorgedrewe toestel wat slegs vir gs. bedoel is, sodanig wees dat—

(a) volgens 13.1.1 getoets, die lekstroom nie die toepaslike maksimum waardes in kolom 3 van tabel 3 oorskry nie; en

(b) wanneer 'n verhittingstoestel aan die bykomende toets in 13.1.2 onderwerp word, daar geen oorvonking of deurslag gedurende die toets sal voorkom nie. Glimontladings sonder spanningsval is egter toelaatbaar.

(c) *Calculation of temperature rise of windings.* Calculate the value of the temperature rise of a copper winding from the formula:

$$t = \frac{R_2 - R_1}{R_1} (234{,}5 + t_1) - (t_2 - t_1),$$

where t = the temperature rise, °C
R_1 = its resistance at the beginning of the test, Ω
R_2 = its resistance at the end of the test, Ω
t_1 = the ambient temperature at the beginning of the test, °C
t_2 = the ambient temperature at the end of the test, °C

12. OPERATION UNDER OVERLOAD CONDITIONS OF APPLIANCES WITH HEATING ELEMENTS

12.1 An appliance with one or more heating elements shall be so designed and constructed that it will withstand overloads liable to occur in normal use. When tested in accordance with 12.1.1 and, when applicable, 12.1.2, a non-self-resetting thermal cut-out that is only accessible or can only be reset with the aid of a tool, or that requires the replacement of a component, shall not operate, no vapour or ignitable gas shall accumulate in the appliance during the test, and at the conclusion of the test the appliance shall show no damage that impairs its ability to comply with the requirements of this specification. In particular, heating wires, internal wiring, and the general assembly shall not show such deformation that creepage distances and clearances are reduced to below the values specified in 29.1, and contacts and connections shall not have worked loose.

12.1.1 *Test A*

(a) *Test conditions*

(1) If a self-resetting thermal cut-out or a non-self-resetting thermal cut-out which is accessible and can be reset without the aid of a tool operates, consider the operating period to be ended. Allow the appliances to cool down and reset the cut-out for the next cycle.

(2) The cooling period between cycles may be shortened by using forced cooling.

(3) If an appliance incorporates a motor, the operation of which may affect the input to the heating element(s), operate the motor from a separate supply, at its rated voltage and under normal load.

(b) *Procedure.* Mount or place the appliance as specified in 11.1.1 *(a)* and subject it to 15 operating cycles, each cycle comprising an operating period as specified in 11.1.1 *(a)* (12), under conditions of adequate heat discharge followed by a cooling period sufficient to allow the appliance to cool down to approximately ambient temperature. Place all heating elements that can be operated at the same time in circuit and adjust the supply voltage so that the input is as follows:

(1) Appliances with a rated input not exceeding 100 W: 1,33 times rated input;

(2) appliances with a rated input exceeding 100 W: 1,27 times rated input or 1,21 times rated input plus 12 W, whichever is the greater.

12.1.2 *Test B.* In the case of an appliance provided with a pressure switch, repeat the test given in 12.1.1 but with operating and cooling periods each of duration approximately 5 min, and interrupt the current by controlling the working pressure.

13. ELECTRICAL INSULATION AND LEAKAGE CURRENT AT OPERATING TEMPERATURE

13.1 At operating temperature the electrical insulation of an appliance, other than a motor-operated appliance intended for D.C. only, shall be such that—

(a) when tested in accordance with 13.1.1, the leakage current does not exceed the appropriate maximum given in Column 3 of Table 3; and

(b) when a heating appliance is subected to the additional test given in 13.1.2, no flashover or breakdown shall occur during the test but glow discharges without drop in voltage shall be permissible.

TABEL 3—LEKSTROOMWAARDES

1	2	3
Toestel	Piek van aanlê van toetsspanning	Lekstroom*, maks.
Klas II-toestel	Soos gespesifiseer in 13.1.1 *(c)* (1)	0,5 mA
Verplaasbare klas I-toestel		0,75 mA
Staande klas I-motorgedrewe toestel		3,5 mA
Staande klas I-toestel met verhittingselemente wat afgehaal kan word of wat afsonderlik afgeskakel kan word		0,75 mA of 0,75 mA per kW aangeslane inset van elke element of groep elemente, watter ook al die grootste is, met 'n maksimum van 5 mA vir die hele toestel
Ander staande klas I-toestelle		0,75 mA of 0,75 mA per kW aangeslane inset van die toestel, watter ook al die grootste is, met 'n maksimum van 5 mA
Klas II-toestel		0,25 mA
Klas II-toestel met die volgende mate van beskerming teen vog:	Soos gespesifiseer in 13.1.1 *(c)* (2)	
(a) Gewoon		5,0 mA
(b) Uitgesonderd gewoon		3,5 mA

* In die geval van 'n toestel met verhittingselemente sowel as motore, moet die totale lekstroom binne die grense wees wat vir verhittingstoestelle of vir motorgedrewe toestelle gespesifiseer is, watter ook al die grootste is, maar die twee grenswaardes moet nie bygevoeg word nie.

TABLE 3—LEAKAGE CURRENTS

1	2	3
Appliance	Point of application of test voltage	Leakage current*, max.
Class III appliance	As specified in 13.1.1 *(c)* (1)	0,5 mA
Portable Class I appliance		0,75 mA
Stationary Class I motor-operated appliance		3,5 mA
Stationary Class I appliance having heated elements that are detachable or can be switched off separately		0,75 mA or 0,75 mA per kW rated input of each element or group of elements, whichever is the greater, with a maximum of 5 mA for the appliance as a whole
Other stationary Class I appliances		0,75 mA or 0,75 mA per kW rated input of the appliance whichever is the greater, with a maximum of 5 mA
Class II appliance		0,25 mA
Class II appliance with degree of protection against moisture:	As specified in 13.1.1 *(c)* (2)	
(a) Ordinary		5,0 mA
(b) Other than ordinary		3,5 mA

* In the case of an appliance that incorporates both heating element(s) and motor(s), the total leakage current shall be within the limits specified for heating appliances or for motor-operated appliances, whichever is the greater, but the two limits shall not be added.

13.1.1 *Toets A*

(a) *Toetstoestande.* Laat die toestel soos volg werk vir die toepaslike werktyd gespesifiseer in 11.1.1 *(a)* (12) en let op die werklike looptyd:

(1) Laat 'n verhittingstoestel werk, in toestande van voldoende hittevrystelling, met alle verhittingselemente in die baan en met 'n toevoerspanning wat sodanig is dat die inset 1,15 maal die maksimum aangeslane inset is.

13.1.1 *Test A*

(a) *Test conditions.* Operate, as follows, the appliance for the relevant operating period specified in 11.1.1 *(a)* (12), and note the actual running time:

(1) Operate a heating appliance, under conditions of adequate heat discharge, with all heating elements in circuit and with the supply voltage such that the input is 1,15 times maximum rated input.

University of Fort Hare
Together in Excellence

(2) Verbind 'n motorgedrewe toestel met 'n toevoerspanning wat gelyk is aan 1,06 maal die boonste grens van die spanningbestek en laat dit onder gewone las werk.
(3) Laat 'n gekombineerde toestel werk soos vir 'n motorgedrewe toestel gespesifiseer.
(4) Toets 'n driefasige toestel wat ook geskik is vir enkelfasige toevoer, deur die drie dele wat in parallelle verbinding is, te verbind en dit as 'n enkelfasige toestel te toets.
(5) Indien 'n toestel een of meer kapasitors het en van 'n enkelpoolskakelaar voorsien is, verifieer dat die kapasitors wat agter 'n enkelpoolskakelaar verbind is, nie oormatige stroom veroorsaak nie deur die metings met die skakelaar in die af-posisie te herhaal.
(6) Voer toetse uit terwyl die toestel met die toevoer verbind is, maar in die geval van 'n driefasige toestel wat nie vir enkelfasige toevoer geskik is nie, moet die toets in 13.1.2 uitgevoer word onmiddellik nadat die toestel van die toevoer ontkoppel is.
(7) Toets 'n verhittingstoestel met ws, tensy die toestel slegs vir gs is, in welke geval die toets met gs uitgevoer moet word.
(8) Voorsien krag aan 'n toestel deur 'n isoleertransformator of behalwe in die geval 'n verhittingstoestel, isoleer dit van aarde.
(9) Verbind die toevoeraansluiters van 'n enkelfasige toestel met 'n aangeslane spanning van meer as 250 V met twee van die fasegeleiers, terwyl die oorblywende fasegeleier nie gebruik word nie.

(b) Apparaat. 'n Meetstroombaan soos volg:
(1) Vir 'n enkelfasige toestel met 'n aangeslane spanning van hoogstens 250 V, 'n driefasige toestel wat as enkelfasige toestelle getoets moet word en verhittingstoestel vir slegs gs,
(i) indien van klas II: kyk fig. 4;
(ii) indien van 'n ander klas: kyk fig. 5.
(2) Vir 'n driefasige toestel wat nie vir enkelfasige toevoer geskik is nie en 'n enkelfasige toestel met 'n aangeslane spanning van meer as 250 V,
(i) indien van klas II: kyk fig. 6;
(ii) indien van 'n ander klas: kyk fig. 7.
(3) Die weerstand van die meetbaan moet 2 000 ± 100 Ω wees en indien daar vermoed word dat hoëfrekwensiestrome in 'n motorgedrewe toestel opgewek word, moet die meetinstrument 'n noukeurigheid hê van minstens 5% vir alle frekwensies binne die bestek 20-5 000 Hz, maar moet die ongevoelig vig hoër frekwensies wees. Indien daar nie hoëfrekwensiestrome aanwesig is nie, mag die afsnyfrekwensie van die meetinstrument 5 000 Hz oorskry.

(c) Prosedure. Meet die lekstrome soos volg:
(1) In alle gevalle, tussen enige pool van die toevoer en bereikbare metaaldele en metaalfoelie wat saam verbind is, terwyl die metaalfoelie in aanraking met bereikbare oppervlakke van isoleermateriaal is en met die grootste moontlike oppervlakte moontlik in aanraking met die oppervlak wat getoets word, sonder om groter as 200 mm × 100 mm te wees. Indien die oppervlak van die metaalfoelie kleiner is as die oppervlak wat getoets word, skuif dit sodat alle dele van die oppervlak getoets word. Maak seker dat die hitteverspreiding van die toestel nie deur die metaalfoelie beinvloed word nie.

By die toets van 'n enkelfasige toestel met 'n aangeslane spanning van hoogstens 250 V of 'n driefasige toestel wat as 'n enkelfasige toestel getoets moet word, meet die lekstroom met die kiesskakelaar afgebeeld in fig. 4 of fig. 5, soos toepaslik, in elk van die posisies 1 en 2.

In ander gevalle, meet die lekstroom met die skakelaars a, b en c, afgebeeld in fig. 6 en 7, toe. In die geval van 'n driefasige toestel wat nie geskik is vir enkelfasige toevoer nie, herhaal die metings met elk van die skakelaars a, b en c oop om die beurt, terwyl die ander twee skakelaars toe is. Herhaal in die geval van 'n enkelfasige toestel die metings met een van die skakelaars oop.

(2) Dan, slegs in die geval van 'n klas II-toestel, tussen enige pool van die toevoer en metaaldele wat slegs deur funksionele isolasie van die lewendige dele geskei is.

13.1.2 *Toets B (Verhittingstoestelle)*

(a) Apparaat. Gebruik 'n hoëspanningstransformator met 'n aanslag van minstens 500 VA vir die toets.

Indien die sekondêre wikkeling van die isoleertransformator (kyk 13.1.1 *(a)* (8)) nie in die middel van 'n tap voorsien is nie, verbind die leweringswikkeling van die hoëspanningstransformator met die middelpunt van die potensiometer wat 'n totale weerstand van hoogstens 2 000 Ω het en oor die leweringswikkeling van die isoleertransformator verbind is.

(b) Prosedure. Onderwerp die isolasie 1 minuut lank aan 'n spanning met 'n wesenlik sinusvorm en 'n frekwensie van 50 Hz. Verbind 'n enkelfasige toestel en 'n driefasige toestel wat as 'n enkelfa-

(2) Connect a motor-operated appliance to a supply voltage equal to 1,06 times the upper limit of the voltage range, and operate it under normal load.
(3) Operate a combined appliance as specified for a motor-operated appliance.
(4) Test a three-phase appliance that is also suitable for single-phase supply by connecting the three sections connected in parallel and then testing it as a single-phase appliance.
(5) If an appliance incorporates one or more capacitors and is provided with a single-pole switch verify, by repeating the measurements with the switch in the "off" position, that capacitors connected behind a single-pole switch do not cause an excessive current.
(6) Conduct test(s) while the appliance is connected to the supply, except that, in the case of a three-phase appliance that is not suitable for single-phase supply, the test give in 13.1.2 shall be conducted immediately after the appliance has been disconnected from the supply.
(7) Test a heating appliance with A.C., unless the appliance is for D.C. only, in which case conduct the test with D.C.
(8) Supply an appliance through an isolating transformer or, except in the case of a heating appliance, insulate it from earth.
(9) Connect the supply terminals of a single-phase appliance with a rated voltage exceeding 250 V to two of the phase conductors, the remaining phase conductor being unused.

(b) Apparatus. A measuring circuit as follows:
(1) For a single-phase appliance with a rated voltage not exceeding 20 V, a three-phase appliance to be tested as single-phase appliances, and a heating appliance for D.C. only,
(i) if of Class II: see Fig. 4;
(ii) if of other class: see Fig. 5.
(2) For a three-phase appliance not suitable for single-phase supply, and a single-phase appliance with a rated voltage exceeding 250 V,
(i) if of Class II: see Fig. 6;
(ii) if of other class: see Fig. 7.
(3) The resistance of the measuring circuit shall be 2 000 ± 100 Ω, and, if it is suspected that high-frequency currents are being generated in a motor-operated appliance, the measuring instrument shall have an accuracy of at least 5% for all frequencies within the range of 20-5 000 Hz, but shall be insensitive to higher frequencies. If high-frequency currents are not present, the cut-off frequency of the measuring instrument may exceed 5 000 Hz.

(c) Procedure. Measure the leakage currents as follows:
(1) In all cases, between any pole of the supply and accessible metal parts and metal foil connected together, the metal foil being in contact with accessible surfaces of insulating material and having the largest area possible in contact with the surface under test, without exceeding 200 mm × 100 mm. If the area of the metal foil is smaller than the surface under test, move it so as to test all parts of the surface. Ensure that heat dissipation of the appliance is not affected by the metal foil.

When testing a single-phase appliance having a rated voltage not exceeding 250 V, or a three-phase appliance to be tested as a single-phase appliance, measure the leakage current with the selector switch in Fig. 4 or Fig. 5, as relevant, in each of the positions 1 and 2.

In other cases measure the leakage current with the switches a, b, and c, shown in Fig. 6 and 7, closed. In the case of a three-phase appliance not suitable for single-phase supply, repeat the measurements with each of the switches a, b, and c open in turn, the other two switches being closed, and in the case of a single-phase appliance, repeat the measurements with one of the switches open.

(2) Then, in the case of a Class II appliance only, between any pole of the supply and metal parts separated from the live parts by functional insulation only.

13.1.2 *Test B (Heating Appliances)*

(a) Apparatus. Use a high-voltage transformer for the test which has a rating of at least 500 VA.

If the secondary winding of the isolating transformer (see 13.1.1 *(a)* (8)) is not provided with a tap at the midpoint, connect the output winding of the high-voltage transformer to the midpoint of a potentiometer that has a total resistance not exceeding 2 000 Ω, and is connected across the output winding of the isolating transformer.

(b) Procedure. Subject the insulation for 1 min to a voltage of substantially sinewave form, and having a frequency of 50 Hz. Connect a single-phase appliance and a three-phase appliance to be

sige toestel getoets moet word, soos in fig. 8 aangetoon. Lê die toepaslike toetsspanning aangegee in tabel 4 tussen lewendige dele en die romp aan. Lê, in die geval van 'n klas II-toestel, die toetsspanning ook aan tussen die romp en die metaaldele wat slegs deur basiese isolasie van lewendige dele geskei is. Lê aan die begin hoogstens die helfte van die voorgeskrewe spanning aan en verhoog dit dan vinnig tot die volle waarde.

TABEL 4—TOETSSPANNINGS

1	2
Tipe isolasie	Toetsspanning
Basiese isolasie wat in gewone gebruik aan ekstra lae spanning onderwerp word	500
Alle ander basiese isolasie	1 000
Aanvullende isolasie	2 750
Versterkte isolasie	3 750

14. RADIOSTEURINGSONDERDRUKKING

14.1 RADIO- EN TELEVISIESTEURING. Toestel moet aan die geldende vereistes in die „Radiokommunikasiesteuringsgrense" uitgegee deur die Posmeester-generaal ooreenkomstig die Radioregulasies kragtens artikel 18 (i) *(e)* van die Radiowet, 1952 (Wet 3 van 1952), voldoen.

15. VOGDIGTHEID

15.1 Die omhulsel van 'n drupdigte, spatdigte of waterdigte toestel moet sodanig wees dat, nadat dit volgens 15.1.1 en, indien toepaslik, 15.2.2 behandel is en soos in 16.1.3 getoets is,

(a) enige water wat die toestel binnegedring het, nie 'n nadelige uitwerking op die veiligheid of gewone gebruik van die toestel sal hê nie;

(b) daar geen spoor van water is op isolasie waarvoor kruipafstande in tabel 22 gespesifiseer word nie; en

(c) daar tydens die toets in 16.1.3 geen oorvonking of deurslag voorkom nie.

15.1.1 *Toets*

(a) Toetstoestande

(1) In die geval van 'n toestel wat van 'n toestelinlaat voorsien is, bring 'n toepaslike verbinder en buigsame koord of kabel aan. In die geval van 'n toestel met herbedraadbare koorde, bring die ligste toelaatbare tipe buigsame kabel of koord (kyk 25.7) met die kleinste toepaslike dwarsdeursneeoppervlakte aangegee in kolom 2 van tabel 16 aan. Toets ander toestelle soos verkoop.

(2) Verwyder alle dele wat afgehaal kan word sonder hulp van gereedskap, met inbegrip van dekstukke en elektriese komponente soos afhaalbare verhittingselemente. Indien dit nodig is, onderwerp hulle saam met die res van die toestel aan die behandeling in 15.1.1 *(b)* voorgeskryf.

(3) Verouder nie-metaalseëlringe en ander seëlmiddele, indien daar is, 10 dae lank in 'n atmosfeer met die samestelling en druk van die omgewingslug, deur hulle vryelik te laat hang in 'n elektries verhitte kamer wat ontlug word deur natuurlike sirkulasie wat verskaf word deur gate in die muur van die kamer en wat by 'n temperatuur van 70 ± 2 °C gehou word. Onmiddellik nadat die monsters uit die kamer geneem is, kondisioneer hulle minstens 16 uur lank by omgewingstemperatuur (vermy blootstelling aan regstreekse sonlig) en plaas hulle dan weer terug in die toestel. Draai die afdigstukke en ander seëlringe vas met 'n wringkrag wat gelyk is aan 3,3 N.m in die geval van afdigstukke en ringe met 'n binnediameter van minder as 21 mm en 5,0 N.m in ander gevalle.

(b) Apparaat

(1) *Vertikale reënapparaat*, soos in fig. 9 aangetoon.

(2) *Spatapparaat*, soos in fig. 10 aangetoon.

(3) *Spuitapparaat*, soos in fig. 11 aangetoon, en 'n buis wat 'n halfsirkel vorm waarvan die sirkelradius 200 mm of 'n veelvoud van 200 mm is en wat so klein is as wat moontlik is in verhouding tot die grootte en posisies (kyk (2) (ii) hieronder) van die toestel. Die pyp is geperforeer sodat strale water op die middel van die sirkel gerig kan word. Die waterdruk by die inlaat is ongeveer 100 kPa. Die apparaat is verbind met middele wat die pyp deur 'n hoek van 60° aan weerskante van die vertikaal teen 'n tempo van ongeveer 4 sekondes per volledige siklus laat draai.

(c) Prosedure

(1) *Drupdigte toestelle*. Plaas die toestel in die gewone gebruiksposisie onder die vertikale reënapparaat en onderwerp dit 5 minute lank aan kunsreën van 3 mm/min.

tested as a single-phase appliance as shown in Fig. 8. Apply the appropriate test voltage given in Table 4 between live parts and the body, and, in the case of a Class II appliance, apply the test voltage(s) also between the body and metal parts separated from live parts by basic insulation only. Apply initially, not more than half the prescribed voltage, then raise it rapidly to the full value.

TABLE 4—TEST VOLTAGES

1	2
Type of insulation	Test voltage
Basic insulation subjected in normal use to extra-low voltage	500
All other basic insulation	1 000
Supplementary insulation	2 750
Reinforced insulation	3 750

14. RADIO INTERFERENCE SUPPRESSION

14.1 RADIO AND TELEVISION INTERFERENCE. An appliance shall comply with the current requirements given in "Limits of Interference to Radio Communications" issued by the Postmaster General in terms of the Radio Regulations under section 18 (i) *(e)* of the Radio Act, 1952 (Act 3 of 1952).

15. MOISTURE RESISTANCE

15.1 The enclosure of a drip-proof, splashproof, or watertight appliance shall be such that, after being treated in accordance with 15.1.1 and, when applicable, 15.2.1, and then tested as specified in 16.1.3,

(a) any water that has entered the appliance shall not have a harmful effect on the safety or normal use of the appliance;

(b) there shall be no trace of water on insulation for which creepage distances are specified in Table 22; and

(c) no flashover or breakdown shall occur during the test given in 16.1.3.

15.1.1 *Test*

(a) Test conditions

(1) In the case of an appliance provided with an appliance inlet, fit an appropriate connector and flexible cord or cable. In the case of an appliance having rewireable cords, fit the lightest permissible type of flexible cable or cord (see 25.7) of the smallest appropriate sectional area given in Column 2 of Table 16. Test other appliances as sold.

(2) Remove all parts that can be removed without the aid of a tool, including covers and electrical components such as detachable heating elements. If necessary, subject them to the treatment prescribed in 15.1.1 *(b)*, together with the rest of the appliance.

(3) Age non-metallic sealing rings and other sealing means, if any, for 10 d in an atmosphere having the composition and pressure of the ambient air, by suspending them freely in an electrically heated cabinet that is vented by natural circulation provided by holes in the walls of the cabinet, and maintained at a temperature of 70 ± 2 °C. Immediately after taking the samples out of the cabinet, condition them at ambient temperature (avoiding exposure to direct sunlight) for at least 16 h, and then re-assemble them to the appliance. Tighten the glands and other sealing rings with a torque equal to 3,3 N.m in the case of glands and rings of internal diameter less than 21 mm, and 5,0 N.m in other cases.

(b) Apparatus

(1) *Vertical rain apparatus*, as shown in Fig. 9.

(2) *Splash apparatus*, as shown in Fig. 10.

(3) *Spray apparatus*, as shown in Fig. 11, and a tube formed into a semicircle, the radius of the circle being 200 mm or a multiple of 200 mm, and as small as is compatible with the size and positions (see (2) (ii) below) of the appliance. The tube is perforated so that jets of water are directed towards the centre of the circle and the water pressure at the inlet is approximately 100 kPa. The apparatus is connected to means for causing the tube to oscillate through an angle of 60° on either side of the vertical at a rate of approximately 4 s/complete cycle.

(c) Procedure

(1) *Drip-proof appliances*. Place the appliance, in its normal position of use, under the vertical rain apparatus and subject it for 5 min to an artificial rainfall of 3 mm/min.

University of Fort Hare

(2) *Spatdigte toestelle*

(i) Gebruik die vertikale reënapparaat om 'n handtoestel 5 min lank aan kunsreën van 3 mm/min te onderwerp. Draai die toestel deurlopend deur die posisies wat in alle waarskynlikheid sal toelaat dat water binnedring.

(ii) Spuit 'n toestel wat nie in die hand gehou word nie, 10 min lank met water uit die spuitapparaat. Nadat, in die geval van 'n toestel vir muur- of plafonmontering, die toestel op 'n vertikale bord gemonteer is wat groot genoeg is dat 'n rand wat minstens 100 mm breed is rondom die toestel gelaat word, plaas die toestel in die middel van die halfsirkel wat deur die pyp gevorm word sodat die laagste deel daarvan gelyk is met die draai-as. Draai die toestel om sy vertikale as gedurende die toets. Onderwerp die toestel onmiddelik daarna met behulp van die spatapparaat 5 min lank aan bespatting uit alle rigtings. Reël die waterdruk sodat die water ongeveer 150 mm bo die onderkant van die bak opspat. Plaas die bak op die vloer in die geval van 'n toestel wat bedoel is om op die vloer gebruik te word en plaas die bak in die geval van alle ander toestelle op 'n horisontale steunstuk 50 mm onder die onderste rand van die toestel. Maak seker dat die toestel nie regstreeks deur 'n straal uit die spatapparaat getref word nie en skuif die bak rond sodat die toestel uit alle rigtings bespat kan word.

(3) *Waterdigte toestelle*. Laat 'n waterdigte toestel 25 uur lank ondergedompel in water wat 10 g/ℓ natriumchloried bevat en by 'n temperatuur van 20 ± 5 °C is. Die bokant van die toestel moet 50 mm onder die watervlak wees.

(4) Nadat die toestel soos in (1), (2) en (3) hierbo, soos toepaslik, behandel is, hou 'n toestel wat tydens gewone gebruik aan vloeistofstorting onderhewig is, terug vir die toets in 15.2.1 en onderwerp ander toestelle aan die toets vir elektriese sterkte wat in 16.1.3 aangegee word.

15.2 'n Toestel wat tydens gewone gebruik aan vloeistofstorting onderhewig is, moet so gemaak wees dat sodanige storting nie 'n invloed op die elektriese isolasie daarvan sal hê nie. Nadat die toestel aan die toets in 15.2.1 en onmiddellik daarna aan die toets in 6.1.3 onderwerp is, moet dit aan die vereistes van 15.1 *(a)*, *(b)* en *(c)* voldoen.

15.2.1 *Toets*

(a) *Toetstoestande*. Soos in 15.1.1 *(a)* (1) voorgeskryf.

(b) *Prosedure*. Maak die vloeistofhouer van die toestel heeltemal vol water en gooi 'n verdere hoeveelheid wat gelyk is aan 15% van die inhoudsvermoë van die houer geleidelik oor 'n tydperk van 1 min in. Onderwerp die toestel dan onmiddellik aan die toets vir elektriese sterkte soos in 16.1.3 aangegee.

Laat die toestel minstens 24 uur lank in omgewingsatmosfeertoestande staan voordat dit vir voldoening aan 15.3 getoets word.

15.3 'n Toestel moet in so 'n mate bestand wees teen vogtige toestande wat tydens normale gebruik kan voorkom dat, nadat dit aan die toets in 15.3.1 onderwerp is, dit geen tekens van beskadiging binne die bestek van die vereistes van hierdie spesifikasie toon nie en aan die vereistes van 16.1 voldoen.

15.3.1 *Toets*

(a) *Toetstoestande*

(1) Laat enige kabelinlate oop;

(2) indien uitslagplaatjies verskaf is, maak een oop;

(3) verwyder alle dele wat sonder die hulp van gereedskap afgehaal kan word, met inbegrip van dekstukke en elektriese komponente soos afhaalbare verhitingselemente, en onderwerp hulle aan die humiditeitsbehandeling saam met die res van die toestel.

(b) *Prosedure*

(1) Bring die toestel en dele wat volgens *(a)* (3) hierbo verwyder is, tot 'n temperatuur tussen t en t + 4 °C, waar t enige gerieflike waarde tussen 20 °C en 30 °C is. Plaas hulle dan in 'n humiditeitskabinet wat lug bevat by 'n relatiewe humiditeit van 93 ± 2%. Hou die temperatuur van die lug by t ± 1 °C op alle plekke waar die toestel en dele geplaas kan word en laat hulle 48 uur lank in die kabinet in die geval van 'n gewone toestel en 168 uur lank in die geval van 'n drupdigte, spatdigte of waterdigte toestel.

(2) Haal die toestel en dele uit die kabinet, ondersoek vir sigbare tekens van beskadiging wat veroorsaak dat die toestel nie aan die vereistes van 15.3 voldoen nie, sit die dele wat volgens *(a)* (3) hierbo verwyder is, weer mekaar en gaan dan onmiddellik met die toepaslike toets(e) in afdeling 16 aan.

16. ISOLASIEWEERSTAND EN ELEKTRIESE STERKTE

16.1 Die isolasieweerstand en elektriese sterkte van toestelle moet soos volg wees:

(2) *Splashproof appliances*

(i) Using the vertical rain apparatus, subject a hand-held appliance for 5 min to an artificial rainfall of 3 mm/min, turning the appliance continuously through the positions most likely to allow ingress of water.

(ii) Spray an appliance which is not hand-held with water for 10 min by means of the spray apparatus.

After, in the case of an appliance for wall or ceiling mounting, mounting the appliance on a vertical board of size such as to provide a border of width at least 100 mm round the appliance, position the appliance in the centre of the semi-circle formed by the tube, and so that its lowest part is level with the axis of oscillation. Turn the appliance about its vertical axis during the test. Immediately afterwards, by means of the splash apparatus, subject the appliance for 5 min to splashing from all directions. Regulate the water pressure so that the water splashes up 150 mm above the bottom of the bowl. Place the bowl on the floor for an appliance intended to be used on the floor, and for all other appliances place the bowl on a horizontal support 50 mm below the lowest edge of the appliance. Ensuring that the appliance is not hit by a direct jet from the splash apparatus, move the bowl around so as to splash the appliance from all directions.

(3) *Watertight appliances*. Immerse a watertight appliance with the top of the appliance 50 mm below the water level, for 24 h in water containing 10 g/ℓ of sodium chloride and at a temperature of 20 ± 5 °C.

(4) After treating the appliance as in (1), (2), or (3) above, as relevant, reserve an appliance subject to spillage of liquid in normal use for the test given in 15.2.1, and subject other appliances to an electric strength test as given in 16.1.3.

15.2 An appliance subject to spillage of liquid in normal use shall be so constructed that such spillage does not affect its electrical insulation, and, after subjection to the test given in 15.2.1 followed immediately by the test given in 6.1.3, the appliance shall comply with the requirements given in 15.1 *(a)*, *(b)*, and *(c)*.

15.2.1 *Test*

(a) *Test conditions*. As prescribed in 15.1.1 *(a)* (1).

(b) *Procedure*. Fill the liquid container of the appliance completely with water and pour in steadily over a period of 1 min, a further quantity equal to 15% of the capacity of the container, then immediately subject the appliance to an electric strength test as given in 16.1.3.

Allow the appliance to stand for at least 24 h under ambient atmospheric conditions before being tested for compliance with 15.3.

15.3 An appliance shall be so proof against humid conditions which may occur in normal use that, after subjection to the test given in 15.3.1, it shows no damage in accordance with the requirements of this specification and complies with the requirements of 16.1.

15.3.1 *Test*

(a) *Test conditions*

(1) Leave any cable entries open;

(2) if knock-outs are provided, open one of them;

(3) remove all parts that can be removed without the aid of a tool, including covers and electrical components such as detachable heating elements, and subject them to the humidity treatment together with the rest of the appliance.

(b) *Procedure*

(1) Bring the appliance and parts removed in accordance with *(a)* (3) above, to a temperature between t and t + 4 °C, t being any convenient value between 20 °C and 30 °C. Then put them into a humidity cabinet containing air at a relative humidity of 93 ± 2%, maintain the temperature of the air at t ± 1 °C at all places where the appliance and parts can be located, and leave them in the cabinet for 48 h in the case of an ordinary appliance and 168 h in the case of a drip-proof, splashproof, or watertight appliance.

(2) Remove the appliance and parts from the cabinet, examine for visible signs of damage which could cause the appliance not to comply with the requirements of 15.3, re-assemble the parts removed in terms of *(a)* (3) above, and immediately proceed with the relevant test(s) given in section 16.

16. INSULATION RESISTANCE AND ELECTRIC STRENGTH

16.1 The insulation resistance and electric strength of appliances shall be as follows:

University of Fort Hare

(a) *Verhittingstoestelle:* Volgens 16.1.1 gemeet, mag die lekstroom nie die toepaslike waarde in kolom 3 van tabel 5 oorskry nie.

(a) *Heating appliances:* The leakage current measured in accordance with 16.1.1, shall not exceed the appropriate value given in Column 3 of Table 5.

TABEL 5—LEKSTROOM

1	2	3
Toestel	Plek van aanlê van toetsspanning	Lekstroom*, maks.
Klas III-toestel	Soos gespesifiseer in 16.1.1 *(b)* (1)	0,5†
Verplaasbare klas I-toestel		0,75†
Staande klas I-toestel met verhittingselement wat afgehaal kan word of wat afsonderlik afgeskakel kan word		0,75 mA of 0,75 mA per kW aangeslane inset van elke element of groep elemente, watter ook al die grootste is, met 'n maksimum van 5 mA vir die hele toestel†
Ander staande klas I-toestelle		0,75 mA of 0,75 mA per kW aangeslane inset van die toestel, watter ook al die grootste is, met 'n maksimum van 5 mA†
Klas II-toestel		0,25 mA
Klas II-toestel met die volgende mate van beskerming teen vog:	Soos gespesifiseer in 16.1.1 *(b)* (2)	
(a) Gewoon		5,0 mA†
(b) Uitgesonderd gewoon		3,5 mA†

* Hierdie waardes moet verdubbel word indien elke kontrole-inrigting „AF-" posisie het, elke kontakopening minstens 3 mm breed is en die inrigting alle pole gelyktydig ontkoppel.

† Hierdie waardes moet verdubbel word indien die toestel geen kontrole-inrigting uitgesonderd 'n termiese uitskakelaar, 'n termostaat sonder 'n „AF-" posisie of 'n energieregulaar sonder 'n „AF-" posisie het nie.

University of Fort Hare
Together in Excellence

TABLE 5—LEAKAGE CURRENTS

1	2	3
Appliance	Point of application of test voltage	Leakage current*, mA, max.
Class III appliance	As specified in 16.1.1 *(b)* (1)	0,5†
Portable Class I appliance		0,75†
Stationary Class I appliance having heating elements which are detachable or can be switched off separately		0,75 mA or 0,75 mA per kW rated input of each element or group of elements whichever is the greater, with a maximum of 5 mA for the appliance as a whole†
Other stationary Class I appliances		0,75 mA or 0,75 mA per kW rated input of the appliance whichever is the greater, with a maximum of 5 mA
Class II appliance		0,25
Class II appliance with degree of protection against moisture:	As specified in 16.1.1 *(b)* (2)	
(a) Ordinary		5,0†
(b) Other than ordinary		3,5†

* These values shall be doubled if each control device has an "OFF" position, each contact opening being of width at least 3 mm, and the device disconnects all poles simultaneously.

† These values shall be doubled if the appliance has no control device other than a thermal cut-out, a thermostat without an "OFF" position, or an energy regulator without an "OFF" position.

(b) *Motorgedrewe toestelle.* Volgens 16.1.2 gemeet, mag die isolasieweerstand nie minder as die toepaslike waarde in kolom 2 van tabel 6 wees nie

TABEL 6—ISOLASIEWEERSTAND

1	2
Isolasie wat getoets moet word	Isolasieweerstand, MΩ, min.
(a) Tussen lewendige dei en die romp	
(1) Basiese isolasie	2
(2) Versterkte isolasie	7
(b) Tussen lewendige dele en metaaldele van klas II-toestelle wat slegs deur basiese isolasie van die lewendige dele geskei is	2
(c) Tussen metaaldele van klas II-toestelle (wat slegs deur basiese isolasie van lewendige dele geskei is) en die romp	5

(c) *Alle toestelle:* Volgens 16.1.3 getoets, onmiddellik na die toets in 16.1.1 of 16.1.2, soos toepaslik, mag daar geen oorvonking of deurslag tydens die toets voorkom nie.

16.1.1 *Toets A (Verhittingstoestelle)*

(a) *Toetstoestande*

(1) Plaas alle dele wat verwyder is, onmiddellik terug nadat die toets 15.3.1 afgehandel is en voer hierdie toets uit op die koue toestel (ontkoppel van die toevoer) in die humiditeitskabinet of in die kamer waarin die toestel tot die voorgeskrewe temperatuur gebring is, soos toepaslik.

(2) Gebruik die volgende van die toepaslike toetsspannings (gs in die geval van 'n toestel wat slegs vir gebruik saam met gs bedoel is en ws in alle ander gevalle):

(i) In die geval van 'n toestel met 'n aangeslane spanning van hoogstens 250 V en wat slegs vir gebruik saam met gs bedoel is of 'n enkelfasige toestel is of 'n driefasige toestel is wat slegs geskik is vir enkelfasige toevoer: 1,06 maal die aangeslane spanning of 1,06 maal die boonste grens van die aangeslane spanningsbestek, soos toepaslik;

(ii) in alle ander gevalle: 1,06 maal die aangeslane spanning of 1,06 maal die boonste grens van die aangeslane spanningsbestek, soos toepaslik, gedeel deur $\sqrt{3}$.

(b) *Prosedure.* Lê die toepaslike toetsspanning op die toepaslike van die volgende plekke aan en meet die lekstroom terwyl dit aangelê word:

(1) In alle gevalle, soos gespesifiseer in *(a)* en *(d)* in kolom 1 van tabel 7. Maak seker dat die grootte van die metaalfoelie wat volgens *(d)* gebruik word, nie meer as 200 mm × 100 mm is nie en dat die foelie so geskuif word dat alle dele van die oppervlak getoets word;

(2) In die geval van slegs klas II-toestelle, tussen enige pool van die toevoer en metaaldele wat slegs deur basiese isolasie van die lewendige dele geskei word.

(3) Gaan onmiddellik aan met die toets in 16.1.3.

16.1.2 *Toets B (Motorgedrewe Toestelle)*

(a) *Toetstoestande.* Soos in 16.1.1 *(a)*, maar kyk ook B-6.1 van aanhangsel B.

(b) *Prosedure.* Ontkoppel enige verhittingselemente, lê 'n gs.-spanning van ongeveer 500 V aan en meet die isolasieweerstand tussen die toepaslike komponente gespesifiseer in kolom 1 van tabel 6, 1 min nadat dit aangelê is. Gaan onmiddellik aan met die toets in 16.1.3.

16.1.3 *Toets (Alle Toestelle)*

(a) *Toetstoestande.* Voer die toets uit terwyl die komponente, uitgesonderd dié in kolom 1 van kolom 7 aangegee, ontkoppel is en die kapasitor(s) gekortsluit is. Moenie die toets uitvoer tussen die kontakte van skakelaars van mikrospleetkonstruksie, termostate, termiese uitskakelaars en dies meer nie en ook nie op die isolasie van kapasitors wat tussen lewendige dele van verskillende polariteit verbind is nie. Kyk ook B-6.1 van aanhangsel B in die geval van 'n toestel met elektroniese komponente.

(b) *Prosedure.* Lê onmiddellik nadat die toepaslike toets afgehandel is (kyk afdeling 15, 16.1.1, 16.1.2, 18.1 *(b)*) 1 min lank tussen die toepaslike komponente aangegee in kolom 1 van tabel 7 'n spanning aan van wesenlik sinusgolfvorm met 'n frekwensie van 50 Hz en van die toepaslike waarde in kolom 2, 3 of 4, soos toepaslik. Lê aanvanklik hoogstens die helfte van die voorgeskrewe spanning aan en verhoog dit dan vinnig tot die volle waarde. Indien dit prakties moontlik is, toets isoleervoerings afsonderlik.

(b) *Motor-operated appliances:* The insulation resistance measured in accordance with 16.1.2 shall be not less than the relevant value given in Column 2 of Table 6.

TABLE 6—INSULATION RESISTANCE

1	2
Insulation to be tested	Insulation resistance, MΩ, min.
(a) Between live parts and the body	
(1) Basic insulation	2
(2) Reinforced insulation	7
(b) Between live parts and metal parts of Class II appliances which are separated from live parts by basic insulation only	2
(c) Between metal parts of Class II appliances (which are separated from live parts by basic insulation only) and the body	5

(c) *All appliances:* When tested in accordance with 16.1.3, immediately after the test given in 16.1.1 or 16.1.2, as relevant, no flashover or breakdown shall occur during the test.

16.1.1 *Test A (Heating Appliances)*

(a) *Test conditions*

(1) Immediately after completing the test given in 15.3.1, reassemble any parts that were removed and conduct this test on the cold appliance (disconnected from the supply) in the humidity cabinet or in the room in which the appliance was brought to the prescribed temperature, as relevant

(2) Use the appropriate of the following test voltages (D.C. in the case of an appliance intended for use with D.C. only, and A.C. in all other cases):

(i) In the case of an appliance of rated voltage not exceeding 250 V and that is intended for use with D.C. only, or is a single-phase appliance, or a three-phase appliance that is also suitable for single-phase supply: 1,06 times the rated voltage or 1,06 times the upper limit of the rated voltage range, as relevant;

(ii) In all other cases: 1,06 times the rated voltage or 1,06 times the upper limit of the rated voltage range, as relevant, divided by $\sqrt{3}$.

(b) *Procedure.* Apply the appropriate test voltage at the relevant of the following places and, during its application, measure the leakage current:

(1) In all cases, as specified in Items *(a)* and *(d)* in Column 1 of Table 7, ensuring that the size of the metal foil used in terms of Item *(d)* does not exceed 200 mm × 100 mm and that the foil is so moved as to test all parts of the surface;

(2) then, in the case of a Class II appliance only, between any pole of the supply and metal parts separated from the live parts by basic insulation only.

(3) Proceed immediately with the test given in 16.1.3.

16.1.2 *Test B (Motor-Operated Appliances)*

(a) *Test Conditions.* As in 16.1.1 *(a)*, but see also B-6.1 of Annexure B.

(b) *Procedure.* Disconnect any heating elements, apply a d.c. voltage of approximately 500 V and, 1 min after its application, measure the insulation resistance between the appropriate components specified in Column 1 of Table 6. Proceed immediately with the test given in 16.1.3.

16.1.3 *Test (All Appliances)*

(a) *Test conditions.* Conduct the test with components other than those listed in Column 1 of Table 7, disconnected and capacitor(s) short-circuited. Do not carry out the test between the contacts of switches of micro-gap construction, thermostats, thermal cut-outs, and the like, or on the insulation of capacitors connected between live parts of different polarity, and, in the case of an appliance that incorporates electronic components, see also B-6.1 of Annexure B.

(b) *Procedure.* Immediately after completing the relevant test (see section 15, 16.1.1, 16.1.2, 18.1 *(b)*) apply for 1 min between the relevant components given in Column 1 of Table 7, a voltage of substantially sine-wave form, having a frequency of 50 Hz, and of the appropriate values given in Column 2, 3, or 4, as applicable. Apply initially not more than half the prescribed voltage, then raise it rapidly to the full value. If practicable, test insulating linings separately.

TABEL 7—TOETSSPANNING

1	2	3	4
	Toetsspanning, V		
Plek van aanlê van toetsspanning	Klas III-toestelle	Klas II-toestelle	Ander toestelle
(a) Tussen lewendige dele en dele van die romp wat van lewendige dele geskei is deur—			
slegs basiese isolasie	500	—	1 250
versterkte isolasie	—	3 750	3 750
(b) Tussen lewendige dele van verskillende polariteit*	500	1 250	1 250
(c) In die geval van dele met dubbelisolasie, tussen metaaldele wat slegs deur basiese isolasie van die lewende dele geskei is en			
(1) lewendige dele	—	1 250	1 250
(2) die romp	—	2 500	2 500
(d) Indien die afstand gemeet deur die voering tussen lewendige dele en 'n metaalomhulsel of dekstuk minder is as die toepaslike vry ruimte wat in 29.1 gespesifiseer is, tussen die metaalomhulsel of dekstuk en metaalfoelie in aanraking met die binneoppervlak van die voering	—	2 500	1 250
(e) Tussen metaalfoelie in aanraking met handvatsels, knope, grepe en dies meer en hul skagte, indien hierdie skagte in geval van 'n isolasiefout lewendig kan word	—	2 500	2 500
(f) Tussen die romp en òf—			
(1) metaalfoelie wat om die buigsame toevoerkabel of -koord binne inlaatbusse, koordskerms, koordankers en dies meer gedraai is, òf			
(2) 'n metaalstaaf met dieselfde diameter as die buigsame kabel of koord wat in die plek daarvan ingesteek is	—	2 500	1 250
(g) Tussen die punt waar 'n wikkeling en 'n kapasitor verbind is (indien die isolasie tussen hierdie punt en enige aansluiter vir buitegeleiers tydens normale gebruik aan resonansspanning U onderwerp word) en—			
(1) die romp	—	—	2U+1 000
(2) metaaldele wat slegs deur basiese isolasie van lewendige dele geskei is	—	2U+1 000	—

* Hierdie toets moet nie uitgevoer word nie tensy die nodige ontkoppelings gedoen kan word sonder om die toestel te beskadig.

TABLE 7—TEST VOLTAGES

1	2	3	4
	Test voltage, V		
Position of application of test voltage	Class III appliances	Class II appliances	Other appliances
(a) Between live parts and parts of the body separate from live parts by—			
basic insulation only	500	—	1 250
reinforced insulation	—	3 750	3 750
(b) Between live parts of different polarity*	500	1 250	1 250
(c) In the cases of parts that have double insulation, between metal parts separated from live parts by basic insulation only and			
(1) live parts	—	1 250	1 250
(2) the body	—	2 500	2 500
(d) If the distance, measured through the lining, between live parts and a metal enclosure or cover is less than the appropriate clearance specified in 29.1, between the metal enclosure or cover and metal foil in contact with the inner surface of the lining	—	2 500	1 250
(e) Between metal foil in contact with handles, knobs, grips, and the like and their shafts, if these shafts can become live in the event of an insulation fault	—	2 500	2 500
(f) Between the body and either—			
(1) metal foil wrapped round the supply flexible cable or cord inside inlet bushings, cord guards, cord anchorages, and the like, or			
(2) a metal rod of the same diameter as the flexible cable or cord inserted in its place	—	2 500	1 250
(g) Between the point where a winding and a capacitor are connected (if between this point and any terminal for external conductors the insulation is subjected in normal use to a resonance voltage U) and—			
(1) the body	—	—	2U+1 000
(2) metal parts separated from live parts by basic insulation only	—	2U+1 000	—

* This test shall not be conducted unless the necessary disconnections can be made without damaging the appliance.

17. OORLASBEVEILIGING

17.1 'n Toestel met 'n toevoerbaan deur 'n veiligheidsisoleertransformator moet so gemaak wees dat, volgens 17.1.1 getoets, die temperatuurstyging van geleiers van die bane met ekstra lae veiligheidspanning nie die toepaslike waarde in kolom 2 van tabel 2 met meer as 15 °C oorskry nie en die temperatuur van die transformatorwikkelings nie die toepaslike van die volgende oorskry nie:

Klas wikkelings-isolasie	Temperatuur, °C, maks.
A	140
E	155
B	165

17.1.1 *Toets.* Verbind die toestel met 'n toevoer met 'n spanning van 1,06 of 0,94 maal die aangeslane spanning, watter ook al die hoogste temperatuurstyging veroorsaak, en lê die ongunstigste kortsluiting of oorbelasting wat tydens normale gebruik kan voorkom, aan en meet die temperatuurstyging van *(a)* die transformatorwikkelings en *(b)* die geleiers in die baan met ekstra lae veiligheidspanning.

17. OVERLOAD PROTECTION

17.1 An appliance that incorporates a circuit supply through a safety isolating transformer shall be so constructed that, when tested in accordance with 17.1.1, the temperature rise of conductors of the safety extra-low voltage circuits shall not exceed by more than 15 °C the appropriate value(s) given in Column 2 of Table 2 and the temperature of the transformer windings shall not exceed the appropriate of the following:

Class of winding insulation	Temperature °C, max.
A	140
E	155
B	165

17.1.1 *Test.* With the appliance connected to a supply of voltage 1,06 or 0,94 times the rated voltage, whichever causes the higher temperature rise, apply the most unfavourable short circuit or overload which could occur in normal use and measure the temperature rises of *(a)* the transformer windings, and *(b)* the conductors in the safety extra-low voltage circuit.

University of Fort Hare
Together in Excellence

18. UITHOUVERMOË

18.1 'n Toestel moet so gemaak wees dat, behalwe soos in B-7.1 van aanhangsel B toegelaat,

(a) by onderwerping aan die toepaslike toetse in 18.1.1-18.1.4,
(1) 'n oorlasbeveiligingstoestel nie gedurende die toetse in 18.1.1 en 18.1.2 sal begin werk nie;
(2) daar geen elektriese of meganiese faling sal wees wat sal veroorsaak dat daar nie aan die spesifikasievereistes voldoen word nie;
(3) die isolasie nie beskadig sal word nie; en
(4) kontakte, verbindings, handvatsels, skerms, borseldoppe en ander toebehore en komponente nie losgeraak het nie of enige teken van agteruitgang toon wat aan die veilige werking van die toestel afbreuk doen nie;

(b) by onderwerping aan die toepaslike toetse in afdeling 16, die toestel nog aan die toepaslike vereistes van 16.1 voldoen, maar in die geval van 'n motorgedrewe toestel, moet die minimum waardes vir isolasieweerstand in kolom 2 van tabel 6 met 50% verminder word.

18.1.1 *Toets A*

(a) Laat die apparaat onder normale belasting en teen 'n spanning wat gelyk is aan 1,1 maal die aangeslane spanning loop vir 'n tydperk wat gelyk is aan dié wat in tabel 8 aangegee word, verminder deur die looptye wat aangeteken is volgens 11.1.1 *(a)* (12) en 13.1.1 *(a)* en, vir toestelle met verhittingselemente, deur die looptye wat na die toetse in afdeling 12 aangeteken is.

(b) Laat die toestel dan soos volg onder normale belasting en by 'n spanning gelyk aan 0,9 maal die aangeslane spanning werk vir die toepaslike tydperk in tabel 8 aangegee:
(1) Laat 'n toestel vir deurlopende werking deurlopend werk of vir 'n ooreenstemmende getal tydperke wat elk minstens 8 uur duur;
(2) Laat die toestel vir onderbroke werking lang genoeg vir agtereenvolgende siklusse van die aangeslane „aan-" en „af-" tydperke werk sodat die som van die „aan-" tydperke gelyk is aan die vereiste werktyd;
(3) Laat 'n toestel vir korttermynwerking werk vir die ooreenstemmende getal aangeslane werktye. Indien die temperatuurstyging van enige deel van die toestel die temperatuurstyging wat gedurende die toets in 11.1.1 gemeet is, oorskry, laat rustydperke toe of pas drukkoeling toe.

TABEL 8—WERKTYE

1	2
Tipe toestel	Werktyd, h*
Toestelle met 'n waarskynlike totale werktyd per jaar van minder as 15 uur	15
Ander toestelle	48

* Geld vir elke motor afsonderlik in die geval van 'n toestel met meer as een motor.

18.1.2 *Toets B (Motorgedrewe Toestelle)*

(a) Behalwe in die geval van 'n toestel vir korttermynwerking, sit 'n motorgedrewe toestel onder normale belading 50 maal aan by 'n spanning gelyk aan 1,1 maal die aangeslane spanning en 50 maal by 'n spanning gelyk aan 0,85 maal die aangeslane spanning. Die duur van elke toevoertyd moet gelyk wees aan 10 maal die tyd van aansit tot volle spoed of 10 sekondes, watter ook al die grootste is. Laat genoeg tyd tussen agtereenvolgende looptydperke verloop om te verhoed dat oorverhitting plaasvind. Dié rustyd moet minstens gelyk wees aan drie maal die toevoertydperk.

(b) Sit 'n toestel vir korttermynwerking 50 maal aan soos in *(a)* hierbo, maar slegs teen 'n spanning gelyk aan 0,85 maal die aangeslane spanning.

18.1.3 *Toets C (Motorgedrewe Toestelle).* Sit 'n motorgedrewe toestel wat voorsien is van 'n sentrifugale of ander outomatiese aansitskakelaar 10 000 maal onder gewone belasting aan teen 'n spanning gelyk aan 0,9 maal die aangeslane spanning en 'n werksiklus soos in 18.1.2 *(a)* gespesifiseer.

18.1.4 *Toets D.* Laat die toestel met 'n selfherstel- termiese uitskakelaar werk teen 'n spanning gelyk aan 1,1 maal die aangeslane spanning en onder sodanige belasting dat daar veroorsaak word dat die termiese uitskakelaar werk, totdat die termiese uitskakelaar 200 werksiklusse voltooi het.

19. ABNORMALE WERKING

19.1 'n Toestel moet so ontwerp en gemaak wees dat die risiko van brand of meganiese beskadiging of albei, wat aan die veiligheid afbreuk doen as gevolg van abnormale of slordige werking, so verminder word

18. ENDURANCE

18.1 An appliance shall be so constructed that, except as allowed in terms of B—7.1 of Annexure B,

(a) when subjected to the applicable tests given in 18.1.1-18.1.4,
(1) an overload protection device shall not operate during the tests specified in 18.1.1 and 18.1.2;
(2) there shall be no electrical or mechanical failure that will cause non-compliance with this specification;
(3) the insulation shall not be damaged; and
(4) contacts, connections, handles, guards, brush-caps, and other fittings and components shall not have worked loose or show any sign of deterioration that would impair the safe operation of the appliance;

(b) when then subjected to the applicable tests given in section 16, the appliance shall still comply with the relevant requirements of 16.1 except that, in the case of a motor-operated appliance, the minimum values for insulation resistance given in Column 2 of Table 6 shall be reduced by 50%.

18.1.1 *Test A*

(a) Operate the appliance under normal load and at a voltage equal to 1,1 times rated voltage for a time equal to that shown in Table 8 reduced by the running times noted in terms of 11.1.1 *(a)* (12) and 13.1.1 *(a)*, and, for appliances with heating elements incorporated, by the running times noted in terms of the tests in section 12.

(b) Then operate, as follows, the appliance under normal load and at a voltage equal to 0,9 times rated voltage for the appropriate period shown in Table 8:
(1) Operate an applaince for continuous operation continuously, or for a corresponding number of periods, each of duration at least 8 h;
(2) operate an appliance for intermittent operation for enough consecutive cycles of the rated "on" and "off" periods for the sum of the "on" periods to equal the required operating time;
(3) operate an appliance for short-time operation for the corresponding number of rated operating times and, if the temperature rise of any part of the appliance exceeds the temperature rise measured during the test given in 11.1.1, introduce rest periods of forced cooling.

TABLE 8—OPERATING TIMES

1	2
Type of appliance	Operating time, h*
Appliances having a prospective total operating time per year of less than 15 h	15
Other appliances	48

* Applicable to each motor separately in the case of an appliance that incorporates more than one motor.

18.1.2 *Test B (Motor-Operated Appliances)*

(a) Except in the case of an appliance for short-time operation, start a motor-operated appliance under normal load, 50 times at a voltage equal to 1,1 times rated voltage and 50 times at a voltage equal to 0,85 times rated voltage, the duration of each period of supply being equal to 10 times the time from start to full speed or 10 s, whichever is the greater. Between successive running periods introduce an interval sufficient to prevent overheating and at least equal to three times the period of supply.

(b) Start an appliance for short-time operation 50 times as in *(a)* above, but only at a voltage equal to 0,85 times rated voltage.

18.1.3 *Test C (Motor-Operated Appliances).* Start a motor-operated appliance provided with a centrifugal or other automatic starting switch 10 000 times under normal load and at a voltage equal to 0,9 times rated voltage, the operating cycle being as specified in 18.1.2 *(a)*.

18.1.4 *Test D.* Operate an appliance provided with a self-resetting thermal cut-out at a voltage equal to 1,1 times rated voltage and under such a load as will cause the thermal cut-out to operate, until the thermal cut-out has performed 200 cycles of operation.

19. ABNORMAL OPERATION

19.1 An appliance shall be so designed and constructed that the risk of fire, or of mechanical damage, or of both, that impairs safety as a result of abnormal or careless operation, is so reduced as to enable the

University of Fort Hare
Together in Excellence

dat die toestel aan die volgende vereistes en, in die geval van 'n toestel met 'n elektroniese baan, aan die vereistes van B-8.1 van aanhangsel B kan voldoen:

(a) Wanneer 'n toestel aan die toepaslike toetse in 19.1.2 tot en met 19.1.8 onderwerp word, mag enige vlamme, gesmelte metaal, giftige of vlambare gas wat afgegee word, nie 'n gevaar uitmaak nie, mag omhulsels nie dermate vervorm dat daar nie aan hierdie spesifikasie voldoen kan word nie en mag temperatuurstygings nie die toepaslike waardes in tabel 9 oorskry nie.

TABEL 9—TEMPERATUURSTYGGRENSE

1	2
Dele van omgewing en toestelle	Temperatuur-styging, °C
Mure, plafon en vloer van toetshoek*†	150
Toevoerkabel of -koord†	150
Aanvullende en versterkte isolasie, uitgesonderd termoplastiese materiaal	1,5 maal die waardes in tabel 2 aangegee

* Kyk 11.1.1 *(a)* (2).

† Geld nie vir 'n motorgedrewe toestel sonder 'n verhitter nie.

(b) Na die toets uitgevoer volgens *(a)* hierbo, moet die isolasie tussen lewendige dele en die romp van 'n toestel, uitgesonderd klas III-toestel, wanneer dit tot ongeveer omgewingstemperatuur afgekoel het en, in die geval van 'n toestel wat gedurende normale gebruik onder geleivloeistof gedompel is of daarmee gevul is, nadat dit in water gedompel of met water gevul is, soos toepaslik, en 24 uur lank laat staan is, 'n toets vir elektriese sterkte soos in 16.1.3 deurstaan, maar met gebruik van die toepaslike van die volgende toetsspannings:

(1) 1 000 V vir basiese isolasie;
(2) 2 750 V vir aanvullende isolasie; en
(3) 3 750 V vir versterkte isolasie.

(c) Die motor of motore van 'n toestel wat
(1) in die hand gehou word,
(2) deur die hand aangeskakel gehou word,
(3) deurlopend met die hand gelaai word, of
(4) van 'n tydreëlaar voorsien is,
moet sodanig wees dat by die toets van die toestel volgens 19.1.6, die wikkelingtemperature nie die toepaslike waardes in tabel 10 oorskry nie, maar in die geval van beskermende motoreenhede moet die motor of motore, soos toepaslik, as alternatief aan die vereistes in aanhangsel D voldoen.

TABEL 10—GRENSTEMPERATURE VIR WIKKELINGS

1	2	3	4
	Grenstemperature, °C, maks.		
Tipe toestel	Klas A-isolasie	Klas E-isolasie	Klas B-isolasie
Toestelle wat 30 s of 5 min lank werk of wat voorsien is van 'n tydreëlaar en nie vir gebruik sonder 'n bediener bedoel is nie*	200	215	225
Toestelle wat deur impedansie bevestig word	150	165	175
Toestelle met 'n beveiligingsinrigting wat veroorsaak dat die inrigting in werking tree—			
gedurende die eerste uur	200	215	225
na die eerste uur	175	190	200
na die eerste uur, rekenkundige gemiddelde	150	165	175

* Kyk 19.1.6 *(b)*.

(d) Die motor van 'n motorgedrewe toestel wat bedoel is om 'n afstand af of outomaties beheer te word of wat waarskynlik aanhoudend moet werk terwyl daar geen bediener by is nie,

(1) moet sodanig wees dat wanneer dit volgens 19.1.7 vir lopende oorlasbeveiliging getoets word, die temperatuur van die wikkeling nie die toepaslike van die volgende oorskry nie:

Klas wikkeling-isolasie	Temperatuur, °C, maks.
A	140
E	155
B	165

appliance to comply with the following requirements, and, in the case of an appliance that incorporates an electronic circuit, with the requirements of B-8.1 of Annexure B:

(a) When an appliance is subjected to the appropriate tests given in 19.1.2-19.1.8 inclusive, any flames, molten metal, poisonous or ignitable gas emitted, shall not constitute a hazard enclosures shall not become deformed to an extent that will cause non-compliance with this specification, and temperature rises shall not exceed the relevant values given in Table 9.

TABLE 9—TEMPERATURE RISE LIMITS

1	2
Parts of surroundings and appliances	Temperature rise, °C
Walls, ceiling, and floor of test corner*	150
Supply cable or cord†	150
Supplementary and reinforced insulation other than thermoplastic materials	1,5 times values shown in Table 2

* See 11.1.1 *(a)* (2).

† Not applicable to a motor-operated appliance without a heater.

(b) After testing in accordance with *(a)* above, the insulation between live parts and the body of an appliance, other than of Class III, when cooled down to approximately ambient temperature and, in the case of an appliance which in normal use is immersed in or filled with conducting liquid, after being immersed in or filled with water, as appropriate, and allowed to stand for 24 h, shall withstand an electric strength test as specified in 16.1.3, but using the appropriate at the following test voltages:

(1) 1 000 V for basic insulation;
(2) 2 750 V for supplementary insulation; and
(3) 3 750 V for reinforced insulation.

(c) The motor or motors of an appliance that is—
(1) hand held,
(2) kept switched on by hand,
(3) continuously loaded by hand, or
(4) equipped with a timer,
shall be such that when the appliance is tested in accordance with the test given in 19.1.6, the winding temperatures shall not exceed the appropriate values given in Table 10 except that, in the case of protected motor units, the motor or motors, as relevant, shall as an alternative comply with the requirements given in Annexure D.

TABLE 10—LIMITING TEMPERATURES FOR WINDINGS

1	2	3	4
	Limiting temperature, °C, max.		
Type of appliance	Class A insulation	Class E insulation	Class B insulation
Appliances that are operated for 30 s, or for 5 min, or are provided with a timer and are not intended for use unattended*	200	215	225
Appliances protected by an impedance	150	165	175
Appliances protected by protection device causing the device to operate—			
during first hour	200	215	225
after first hour	175	190	200
after first hour, arithmetic average	150	165	175

* See 19.1.6 *(b)*.

(d) The motor of a motor-operated appliance that is intended to be remotely or automatically controlled or is liable to be operated continuously while unattended

(1) shall be such that when it is tested for running overload protection in accordance with 19.1.7, the temperature of its windings does not exceed the appropriate of the following:

Class of winding insulation	Temperature, °C, max.
A	140
E	155
B	165

(2) of moet, in die geval van 'n beskermende motor, aan die vereistes van aanhangsel D voldoen.

(e) As 'n motorgedrewe toestel vir korttermyn- of onderbroke werking, uitgesonderd die tipe in *(c)* hierbo gespesifiseer, volgens 19.1.8 werk, mag die motorwikkelingtemperature nie die waardes in *(d)* hierbo oorskry nie.

(f) As 'n toestel met 'n seriemotor volgens 19.1.9 werk, mag dit nie onveilig raak nie en mag geen wikkeling of verbinding in die motor losraak nie.

19.1.1 *Toepaslike Toetse en Algemene Toetsvoorwaardes*

(a) Indien meer as een toets op dieselfde toestel van toepassing is, voer die toetse agtereenvolgens uit. (Kyk ook 22.30.)

(b) Onderwerp 'n termostaties beheerde toestel met 'n verhittingselement (of -elemente) en wat bedoel is om ingebou te word of om sonder 'n bediener gebruik te word of wat 'n kapasitor het wat nie deur 'n sekering beveilig word nie of soortgelyke beveiliging wat in parallel met die kontakte van 'n termostaat verbind is, aan die toets in 19.1.2 en, indien toepaslik, aan die toets in 19.1.3 gevolg deur die toets in 19.1.4.

(c) Onderwerp 'n toestel met 'n verhittingselement, wat vir korttermynwerking aangeslaan is, aan die toets in 19.1.2 en, indien toepaslik, die toets in 19.1.3 gevolg deur die toets in 19.1.5.

(d) Onderwerp enige ander toestel met 'n verhittingselement aan die toets in 19.1.2 en, indien toepaslik, aan die toets in 19.1.3.

(e) Onderwerp 'n klas II-toestel met 'n termostaat of ander termostatiese beheer, aan die toets in 19.1.4.

(f) As daar tydens enige toets wat op 'n toestel met 'n verhittingselement uitgevoer word, 'n nie-selfherstel- termiese uitskakelaar in werking tree, 'n verhittingselement breek of die stroom op enige ander wyse onderbreek word voordat bestendige toestande bereik is, moet daar geag word dat die verhittingstydperk afgeloop het.

(g) Onderwerp 'n toestel met 'n motor aan die toepaslike toetse in 19.1.6 tot en met 19.1.9. Onderwerp 'n gekombineerde toestel aan die toetse met die motor en die verhittingsdeel gelyktydig in werking by onderskeidelik die voorgeskrewe spanning en inset indien dit die strafste werktoestande voortbring.

19.1.2 *Toets A*

(a) Laat die verhittingsdele van 'n toestel werk in die toestande in 11.1.1 *(a)* (1) tot 11.1.1 *(a)* (12), soos toepaslik, gespesifiseer, maar sonder voldoende hittevrystelling en terwyl die toevoerspanning sodanig is dat die inset 0,85 maal die aangeslane inset is, en monitor voortdurend die temperatuurstyging van die verskillende dele in tabel 9 gespesifiseer. Indien 'n nie-selfherstel-uitskakelaar in werking tree voordat bestendige toestande bereik is, moet daar geag word dat die werktyd geëindig het en moet die toestel nie aan die toets in 19.1.3 onderwerp word nie.

(b) Indien daar nie 'n onderbreking in die stroom is nie, skakel die stroom af sodra bestendige toestande bereik is, maar in die geval van 'n toestel vir korttermynwerking, aan die einde van die aangeslane werktyd. Laat die toestel tot omgewingstemperatuur afkoel en onderwerp dit dan aan die toets in 19.1.3.

19.1.3 *Toets B.* Herhaal die toets in 19.1.2, maar met 'n toevoerspanning wat sodanig is dat die inset 1,24 maal die aangeslane inset is. Indien daar twyfel bestaan oor voldoening aan die vereistes van 19.1 *(a)*, toets die toestel weer, maar gebruik die ongunstigste toevoerspanning wat 'n inset in die bestek 0,85-1,24 maal die aangeslane inset sal verskaf.

19.1.4 *Toets C.* Herhaal die toets in 19.1.3, maar laat die toestel werk in toestande van voldoende hittevrystelling en terwyl enige kontrole wat die temperatuur van die dele gespesifiseer in tabel 9 begrens, gekortsluit is. Indien die toestel voorsien is van meer as een termostaat of temperatuurbegrenser, kortsluit hulle om die beurt.

19.1.5 *Toets D.* Herhaal die toets in 19.1.3, maar laat die toestel werk in toestande van voldoende hittevrystelling totdat bestendige toestande bereik is, ongeag die aangeslane werktyd.

19.1.6 *Toets E*

(a) *Bykomende toetstoestande*

(1) Sluit bewegende dele indien die toestel wat getoets word—
- (i) bewegende dele het wat waarskynlik kan vastlaan;
- (ii) 'n motor het met 'n aansitdraaimoment wat kleiner is as dié vollaadraaimoment;
- (iii) 'n motor het wat met die hand aangesit moet word;
- (iv) bedoel is om op 'n afstand of outomaties beheer te word;
- (v) waarskynlik sal werk sonder 'n bediener.

(2) Indien die toestel meer as een motor het, staak een motor op 'n slag.

(3) In die geval van 'n toestel met 'n motor met kapasitors in die baan of hulpwikkelings (tensy die toestel nie bedoel is om sonder 'n bediener gebruik te word nie), laat dit werk terwyl die rotor geklem is en die kapasitors een vir een gekortsluit word of die baan verbreek word, watter ook al die ongunstigste is.

(2) or, in the case of a protected motor, shall comply with the requirements given in Annexure D.

(e) When a motor-operated appliance for short-time or intermittent operation, other than of a type specified in *(c)* above, is operated in accordance with 19 1.8, the motor winding temperatures shall not exceed the valued specified in *(d)* above.

(f) When an appliance that incorporates a series motor is operated in accordance with 19.1.9, it shall not become unsafe and no winding or connection in the motor shall work loose.

19.1.1 *Applicable Tests and General Test Conditions*

(a) If more than one of the tests is applicable to the same appliance, conduct the tests consecutively. (See also 22.30.)

(b) Subject a thermostatically controlled appliance that has a heating element (or elements) and is intended for building-in or for use unattended, or that has a capacitor that is not protected by a fuse, or a similar protection that is connected in parallel with the contacts of the thermostat, to the test given in 19.1.2 and, when relevant, to the test given in 19.1.3 followed by the test given in 19.1.4.

(c) Subject an appliance having a heating element and rated for short-time operation, to the test given in 19.1.2 and, when relevant, the test in 19.1.3 followed by the test given in 19.1.5.

(d) Subject any other appliance with a heating element to the test given in 19.1.2 and, when relevant, to the test given in 19.1.3.

(e) Subject a Class II appliance that incorporates a thermostat or other thermal control, to the test given in 19.1.4.

(f) If, in any test conducted on an appliance that has a heating element, a non-self-resetting thermal cut-out operates, a heating element ruptures, or the current is otherwise interrupted before steady conditions are established, consider the heating period to be ended.

(g) Subject an appliance that has a motor to the applicable tests given in 19.1.6-19.1.9 (inclusive). Subject a combined appliance to the tests with the motor and the heating part operated simultaneously at the prescribed voltage and input respectively if this produces the most severe operating conditions.

19.1.2 *Test A*

(a) Operate the heating parts of an appliance under the conditions specified in 11.1.1 *(a)* (1) to 11.1.1 *(a)* (12) as relevant, but without adequate heat discharge and with the supply voltage being such that the input is 0,85 times the rated input, and continuously monitor the temperature rise of the various parts specified in Table 9. If a non-self-resetting cut-out operates before steady conditions are established, consider the operating period to be ended and do not subject it to the test given in 19.1.3.

(b) If interruption of the current does not occur, switch off the current as soon as steady conditions are established but, in the case of an appliance for short-time operation, at the end of the rated operating time. Allow the appliance to cool down to ambient temperature and then subject it to the test given in 19.1.3.

19.1.3 *Test B.* Repeat the test given in 19.1.2 but with a supply voltage such that the input is 1,24 times rated input. Where doubt exists regarding compliance with the requirements of 19.1 *(a)*, test the appliance again but using the most unfavourable supply voltage that will provide an input in the range of 0,85-1,24 times rated input.

19.1.4 *Test C.* Repeat the test given in 19.1.3 but operate the appliance in conditions of adequate heat discharge and with any control that limits the temperature of the parts specified in Table 9, short-circuited. If the appliance is provided with more than one thermostat or temperature limiter, short-circuit these in turn.

19.1.5 *Test D.* Repeat the test given in 19.1.3 but operate the appliance in conditions of adequate heat discharge until steady conditions are established, irrespective of rated operating time.

19.1.6 *Test E*

(a) *Additional test conditions*

(1) Lock moving parts if the appliance under test—
- (i) has moving parts that are liable to become jammed;
- (ii) has a motor with a locked rotor torque smaller than the full-load torque;
- (iii) has a motor to be started by hand;
- (iv) is intended to be remotely or automatically controlled;
- (v) is liable to be operated while unattended.

(2) If the appliance has more than one motor, stall one motor at a time.

(3) In the case of an appliance that incorporates a motor having capacitors in the circuit of an auxiliary winding (unless the appliance is not intended for use unattended), operate it under locked rotor with the capacitors, one at a time, short-circuited or open-circuited, whichever is the more unfavourable.

(4) Laat 'n toestel met 'n driefasige motor onder normale belasting werk, terwyl een fase ontkoppel is

(b) *Prosedure*. Skakel die toestel aan en laat dit teen aangeslane spanning of by die boonste grens van die spanningsbestek, soos toepaslik, werk totdat 'n sekering, termiese uitskakelaar of soortgelyke motorbeveiligingsinrigting in werking tree of vir die toepaslike van die volgende tydperke, watter ook al die kortste tyd is:

(1) 30 sekondes in die geval van—
'n toestel wat in die hand gehou word,
'n toestel wat met die hand aangeskakel gehou moet word, of
'n toestel wat deurlopend met die hand gelaai moet word;

(2) 5 min indien die toestel nie bedoel is vir gebruik sonder 'n bediener nie, maar as die toestel van 'n tydreëlaar voorsien is, vir die maksimum tydperk van die tydreëlaar;

(3) in die geval van ander toestelle, solank as wat nodig is om bestendige toestande te bereik, maar, indien toepaslik, die maksimum tydperk van die tydreëlaar.

Na afloop van die gespesifiseerde werktydperk of, indien toepaslik, op die oomblik wat die beveiligingsinrigting in werking tree, bepaal die toepaslike wikkelingtemperature (kyk tabel 10).

19.1.7 *Toets F (Motorgedrewe Toestelle)* (Kyk ook 19.1 (*d*)).

(a) Laat die toestel onder normale belastingstoestande teen die aangeslane spanning of teen die maksimum van die aangeslane spanningsbestek, soos toepaslik, werk totdat bestendige toestande bereik is in die toepaslike toestande wat in 11.1.1 (*a*) (1) tot 11.1.1 (*a*) (7) gespesifiseer is. Verhoog die las dan só dat die stroom verhoog word in toepaslike trappe terwyl die toevoerspanning by die oorspronklike waarde gehou word. Wag by elke trap totdat bestendige toestande bereik is voordat die las verhoog word. Hou aan om die las in progressiewe trappe te verhoog totdat die oorlasbeveiligsinrigting in werking tree. Bepaal gedurende elke bestendige tydperk die motorwikkelingtemperatuur volgens die weerstandmetode in Bylae 11 van Goewermentskennisgewing R.1615 van 22 Oktober 1965 beskryf en gaan die maksimum waarde wat aangeteken is, na vir voldoening aan die vereistes van 19 1 (*d*).

(b) Indien daar gevind word dat die las nie in toepaslike trappe verhoog kan word terwyl die motor in die toestel gemonteer is nie, haal die motor uit die toestel en herhaal die toets net op die motor.

19.1.8 *Toets G (Motorgedrewe Toestelle)* (Kyk ook 19.1 (*e*)). Laat die toestel onder normale belasting en teen die aangeslane spanning of teen die boonste grens van die aangeslane spanningsbestek, soos toepaslik, werk totdat bestendige toestande bereik is of totdat die termiese uitskakelaar in werking tree, watter ook al eerste gebeur. Volg die weerstandmetode beskryf in Bylae 11 van Goewermentskennisgewing R.1615 van 22 Oktober 1965 om die motorwikkelingtemperatuur onmiddellik na afloop van die werktyd te bepaal.

19.1.9 *Toets H (Toestelle met 'n Seriemotor)*. Laat 'n toestel met 'n seriemotor 1 min lank werk by 'n spanning gelyk aan 1,3 maal die aangeslane spanning en met die laagste moontlike belasting, en ondersoek die toestel dan vir voldoening aan die vereistes van 19.1 (*f*).

20. STABILITEIT EN VRYHEID VAN MEGANIESE GEVARE

20.1 STABILITEIT. Die stabiliteit van 'n toestel, uitgesonderd 'n vaste toestel of 'n toestel wat in die hand gehou word en wat bedoel is vir gebruik op 'n oppervlak soos 'n vloer of 'n tafel, moet sodanig wees dat—

(a) by die toets van die toestel volgens 20.1.1, dit nie omkantel nie;

(b) by die toets van 'n verhittingstoestel volgens 20.1.2 (indien stadium (*b*) van hierdie toets geld), die styging in temperatuur gedurende hierdie stadium

(1) van die toevoerkabel of -koord of van die mure, plafon en vloer van die toetshoek nie 150 °C oorskry nie; en

(2) van aanvullende en versterkte isolasie, uitgesonderd dié van termoplastiese materiaal, nie 1,5 maal die toepaslike waarde in tabel 2 oorskry nie.

20.1.1 *Toets A*

(a) *Toetstoestande*

(1) In die geval van 'n toestel met 'n toestelinlaat, bring die toepaslike verbinder en buigsame kabel of koord aan.

(2) Toets 'n toestel wat van 'n deur (deure) voorsien is met die deur(e) oop of toe, watter ook al die ongunstigste is.

(3) In die geval van 'n toestel wat bedoel is om deur die gebruiker met vloeistof gevul te word, maak die toestel met water vol tot die aangeslane inhoudsvermoë daarvan.

(b) *Prosedure*. Plaas die toestel, met die motor (indien daar een is) afgeskakel, in enige normale gebruiksposisie op 'n vlak wat onder 'n hoek van 10° met die horisontaal is en met die kabel of koord op die skuins vlak in die ongunstigste posisie. Indien die toestel sodanig is dat, as dit deur 'n hoek van 10° gekantel word as dit op 'n horisontale vlak staan, 'n deel daarvan wat normaalweg nie aan die steunoppervlak raak nie, aan die horisontale

(4) Operate an appliance incorporating a three-phase motor under normal load, with one phase disconnected.

(b) *Procedure*. Switch on the appliance and operate it at rated voltage or at the upper limit of the voltage range, as relevant, until a fuse, thermal cut-out, or similar motor-protection device operates or for the appropriate of the following periods, whichever is the shorter time:

(1) 30 s in the case of—
a hand-held appliance,
an appliance which has to be kept switched on by hand, or
an appliance which has to be continuously loaded by hand;

(2) 5 min if the appliance is not intended for use unattended, but if the appliance is equipped with a timer, for the maximum period of the timer;

(3) in the case of other appliances, as long as is necessary to establish steady conditions but, when relevant, the maximum period of the timer.

At the end of the specified operating period or, when relevant, at the instant that the protection device operates, determine the appropriate winding temperature (see Table 10).

19.1.7 *Test F (Motor-Operated Appliances)* (See also 19.1 (*d*)).

(a) Operate the appliance under normal load conditions at rated voltage or at the maximum of the rated voltage range, as relevant, until steady conditions are achieved under the applicable conditions specified in 11.1.1 (*a*) (1) to 11.1.1 (*a*) (7), then so increase the load that the current is increased in appropriate steps while the supply voltage is maintained at its original value. At each step, wait until steady conditions are established before again increasing the load. Continue to increase the load in progressive steps until the overload protection device operates. During each steady period determine the motor winding temperature, using the resistance method described in Schedule 11 of Government Notice R.1615 dated 22 October 1965, and check the maximum value recorded for compliance with the requirements of 19.1 (*d*).

(b) If it is found that the load cannot be increased in appropriate steps with the motor mounted in the appliance, remove it from the appliance, and repeat the test on the motor by itself.

19.1.8 *Test G (Motor-Operated Appliances)* (See also 19.1 (*e*)). The appliance under normal load and at rated voltage or at the upper limit of the rated voltage range, as relevant, until steady conditions are established or until the thermal cut-out operates, whichever occurs first. Using the resistance method described in Schedule 11 of Government Notice R.1615 dated 22 October 1965, determine the motor winding temperature immediately after the end of the operating period.

19.1.9 *Test H (Appliances Incorporating a Series Motor)*. Operate an appliance incorporating a series motor at a voltage equal to 1,3 times rated voltage and with the lowest possible load for 1 min, and then inspect the appliance for compliance with the requirements of 19.1 (*f*).

20. STABILITY AND FREEDOM FROM MECHANICAL HAZARDS

20.1 STABILITY. The stability of an appliance, other than a fixed appliance or a hand-held appliance intended to be used on a surface such as a floor or a table, shall be such that—

(a) when the appliance is tested in accordance with 20.1.1 it does not overturn;

(b) when a heating appliance is then tested in accordance with 20.1.2, (if stage (*b*) of this test is applicable) the rise in temperature during this stage

(1) of the supply cable or cord and of the walls, ceiling, and floor of the test corner shall not exceed 150 °C; and

(2) of supplementary and reinforced insulation, other than of a thermoplastic material, shall not exceed 1,5 times the appropriate values given in Table 2.

20.1.1 *Test A*

(a) *Test conditions*

(1) In the case of an appliance provided with an appliance inlet, fit an appropriate connector and flexible cable or cord.

(2) Test an appliance provided with door(s) with the door(s) open or closed, whichever is the most unfavourable.

(3) In the case of an appliance intended to be filled with liquid by the user, fill the appliance to its rated capacity with water.

(b) *Procedure*. Place the appliance, with the motor (if provided) switched off, in any normal position of use on a plane inclined at an angle of 10° to the horizontal, and with the cable or cord resting on the inclined plane in the most unfavourable position. If the appliance is such that, were it to be tilted through an angle of 10° when standing on a horizontal plane, a part of it not normally in contact with the supporting surface would touch the

vlak sal raak, plaas die toestel op 'n horisontale steun en kantel dit in die ongunstigste rigting deur 'n hoek van 10°.

20.1.2 *Toets B (Verhittingstoestelle)*

(a) In die geval van 'n verhittingstoestel, herhaal die prosedure in 20.1.1 *(b)*, maar vermeerder die skuinshoek of kantelhoek, soos toepaslik tot 15°.

(b) Indien die toestel in een of meer posisies omkantel, onderwerp dit in elke sodanige posisie (om die beurt) aan die toets in 11.1.1 en gaan na vir voldoening aan 20.1 *(b)*.

20.2 VRYHEID VAN MEGANIESE GEVARE

(a) Bewegende dele van 'n motorgedrewe toestel moet sover as wat moontlik is sonder om aan die gebruik en werking van die toestel afbreuk te doen, so gerangskik of omhul wees dat dit die gevaar dat 'n gebruiker gedurende normale gebruik van die toestel beseer kan word, tot 'n minimum beperk; en

(b) volgens 20.2.1 getoets, mag dit nie moontlik wees om met die toetsvinger aan 'n bewegende deel wat die bediener kan beseer, te raak nie.

(c) 'n Beskermende omhulsel, skerm of soortgelyke beskerming mag nie sonder die hulp van gereedskap afgehaal kan word nie, tensy die verwydering daarvan nodig is vir die behoorlike werking van die toestel volgens die fabrikant se aanwysings. 'n Toestel mag nie 'n selfherstel- termiese uitskakelaar of oorstroomlosser bevat nie indien die onverwagte sluiting daarvan gevaar kan veroorsaak.

20.2.1 *Toets.* Ondersoek die toestel vir voldoening aan die vereistes van 20.2 *(a)* en *(c)*. Gebruik dan 'n toetsvinger soos in fig. 1 aangetoon, maar met 'n ronde stuiterplaat met 'n diameter van 50 mm in plaas van die langwerpige plaat van 20 mm × 50 mm, om na te gaan of dit moontlik is om met hierdie vinger aan enige gevaarlike bewegende deel te raak. Indien 'n bewegende deel byvoorbeeld vir die doel van bandspanning verstel kan word, voer die toets uit op dié deel terwyl die deel in die ongunstigste posisie binne die verstelbestek is. Indien dit nodig is, haal die band vir hierdie doel af.

21. MEGANIESE STERKTE

21.1 Die meganiese sterkte en konstruksie van 'n toestel moet sodanig wees dat, nadat dit aan die toets in 21.1.1 onderwerp is, die toestel geen teken van beskadiging toon wat sal veroorsaak dat dit nie aan die vereistes van hierdie spesifikasie voldoen nie en die lewendige dele nie toeganklik geword het nie.

21.1.1 *Toets*

(a) Apparaat

(1) 'n Gevoerde slagtoetsapparaat soos in fig. 12 aangetoon. Die apparaat bestaan uit drie hoofdele: Die romp, die slagsamestel en die geweerde losserkeël.

(2) Die romp bestaan uit die huls, die leibaan vir die slagtoestel, die losmeganisme en alle dele wat stewig daaraan bevestig is, en het 'n massa van 1 250 g.

(3) Die slagsamestel bestaan uit die hamerkop, hamerskag, hamerveer en oorhaalknop, en het 'n massa van 250 g. Die hamerkop het 'n halfronde voorvlak met 'n radius van 10 mm en is van poliamied met 'n Rockwell-hardheid van R100; dit is op so 'n wyse aan die hamerskag bevestig dat, as die slagsamestel op die punt is om losgelaat te word, die afstand tussen die punt daarvan tot by die voorvlak van die keël 20 mm is.

(4) Die keël het 'n massa van 60 g en die keëlveer is sodanig dat dit 'n krag van 20 N uitoefen wanneer die losserkake op die punt is om die slagsamestel los te laat.

(5) Die hamerveer is so ingestel dat die produk van die samedrukking, in millimeter, en die krag wat uitgeoefen word, in N, gelyk is aan 1 000, waar die samedrukking ongeveer 20 mm is. By hierdie instelling is die slagenergie 0,5 ± 0,05 J. Die lossermeganismevere is so gestel dat hulle net genoeg druk uitoefen om die losserkake toe te hou.

(6) Die apparaat word gelaai deur die oorhaalknop terug te trek totdat die losserkake oor die groef in die hamerskag sluit. Die slae word toegedien deur die losserkeël te druk teen 'n toestel in 'n rigting wat loodreg is op die oppervlak van die punt wat getoets word en die druk stadig te vermeerder waardeur veroorsaak word dat die keël terugbeweeg totdat dit aan die losserstawe raak, wat dan beweeg om die lossermeganisme in werking te stel en die hamer te laat val.

(b) Prosedure. Steun die toestel op stewige wyse en dien drie slae op elke punt (om die beurt) van die huls toe waar daar na vermoede 'n swak plek is. Indien dit nodig geag word, dien die slag op handvatsels, hefbome, knoppe, skerms, beskermende omhulsels en ook op seinlampe en hulle bedekkings toe indien

(1) in die geval van 'n lamp en bedekking binne 'n toestel, hulle waarskynlik tydens gewone gebruik beskadig kan word;

(2) 'n lamp of sy bedekking meer as 10 mm uit die omhulsel steek en indien hul oppervlakte 400 mm² ooskry.

As die losserkeël gebruik word op die skerm van 'n verhittingselement wat tydens gewone gebruik sigbaar gloei,

horizontal plane, place the appliance on a horizontal support and tilt it in the most unfavourable direction through an angle of 10°.

20.1.2 *Test B (Heating Appliances)*

(a) In the case of a heating appliance, repeat the procedure given in 20.1.1 *(b)* but with the angle of inclination or tilt, as relevant, increased to 15°.

(b) If the appliance overturns in one or more positions, subject it, in each such position (in turn) to the test given in 11.1.1, and check for compliance with 20.1 *(b)*.

20.2 FREEDOM FROM MECHANICAL HAZARDS

(a) Moving parts of a motor-operated appliance shall, as far as is compatible with the use and working of the appliance, be so arranged or enclosed as to minimize the chances of injury to a user during normal use of the appliance; and

(b) when tested in accordance with 20.2.1, it shall not be possible to touch, with the test finger, a moving part that is capable of causing injury to the operator.

(c) A protective enclosure, guard, or similar means of protection shall not be removable without the aid of a tool unless its removal is necessary for the proper operation of the appliance in accordance with the manufacturer's instructions. An appliance shall not incorporate a self-resetting thermal cut-out or overcurrent release if its unexpected closure can cause danger.

20.2.2 *Test.* Inspect the appliance for compliance with the requirements of 20.2 *(a)* and *(c)*; then, using a test finger as shown in Fig. 1 but having a circular stop plate with a diameter of 50 mm instead of the oblong 20 mm × 50 mm plate, check whether it is possible to touch any dangerous moving part with this finger. If a moving part is adjustable for the purpose of, for instance, belt tensioning, conduct the test on that part with the part in its most unfavourable position within the range of adjustment. If necessary, remove the belt for this purpose.

21. MECHANICAL STRENGTH

21.1 The mechanical strength and construction of an appliance shall be such that, after subjection to the test given in 21.1.1, the appliance shows no sign of damage that will cause non-compliance with the requirements of this specification and live parts shall not have become accessible.

21.1.1 *Test*

(a) Apparatus

(1) A spring-operated impact test apparatus as shown in Fig. 12. The apparatus consists of three main parts: The body, the striker assembly, and the spring-loaded release cone.

(2) The body comprises the housing, the guide for the striker, the release mechanism and all parts rigidly fixed to it, and has a mass of 1 250 g.

(3) The striker assembly comprises the hammer head, hammer shaft, hammer spring, and cocking knob, and has a mass of 250 g. The hammer head has a hemispherical face of radius 10 mm and is of a polyamide that has a Rockwell hardness of R100; it is fixed to the hammer shaft in such a way that, when the striker assembly is on the point of release, the distance from its tip to the plane of the front of the cone is 20 mm.

(4) The cone has a mass of 60 g, and the cone spring is such that it exerts a force of 20 N when the release jaws are on the point of releasing the striker assembly.

(5) The hammer spring is so adjusted that the product of the compression, in millimetres, and the force exerted, in N, equals 1 000, the compression being approximately 20 mm. With this adjustment, the impact energy is 0,5 ± 0,05 J. The release-mechanism springs are so adjusted that they exert just sufficient pressure to keep the release jaws in the closed position.

(6) The apparatus is cocked by pulling the cocking knob back until the release jaws engage with the groove in the hammer shaft. The blows are applied by pressing the release cone against an appliance in a direction perpendicular to the surface at the point to be tested, and slowly increasing the pressure, thus causing the cone to move back until it is in contact with the release bars, which then move to operate the release mechanism and allow the hammer to strike.

(b) Procedure. Support the appliance rigidly and apply three blows to each point (in turn) of the enclosure where weakness is suspected. If deemed necessary, apply the blow to handles, levers, knobs, guards, protective enclosures, and also to signal lamps and their covers if—

(1) in the case of a lamp and cover inside an appliance, they are likely to be damaged in normal use;

(2) a lamp or its cover protrudes from the enclosure by more than 10 mm or if their surface area exceeds 400 mm².

When applying the release cone to the guard of a heating element which glows visibly in normal use, ensure that if the

University of Fort Hare
Together in Excellence

maak seker dat as die hamerkop deur die skerm val, dit nie die verhittingselement sal tref nie. By die nagaan van voldoening aan 21.1, veronagsaam beskadiging aan die afwerking, klein duike wat nie die kruipafstande en vry ruimtes tot onder die toepaslike waardes in tabel 22 verminder nie, skrapies wat nie afbreuk doen aan die beveiliging teen elektriese skok of vog nie, barste wat nie met die blote oog sigbaar is nie en oppervlakbarste in veselversterkte vormstukke. Indien 'n sierbedekking 'n bedekking aan die binnekant het, veronagsaam breking van die sierbedekking indien die binnebedekking die toets deurstaan nadat die sierbedekking verwyder is.

21.2 Volgens 21.2.1 of 21.2.2 getoets, soos toepaslik, moet die meganiese sterkte van skroefafdigstukke en van skouers in pypleidinginlate met 'n nominale grootte van 16 mm of 20 mm sodanig wees dat geen vervorming of skade op 'n afdigstuk, 'n omhulsel of 'n kabelinlaat sigbaar is wat kan veroorsaak dat daar nie aan die ander vereistes van hierdie spesifikasie voldoen kan word nie.

21.2.1 *Toets A (Skroefafdigstukke).* Voorsien die skroefafdigstuk wat getoets moet word, van 'n silindriese metaalstaaf met 'n diameter gelyk aan die naaste heelgetal onder die binnediameter, in millimeter, van die pakking. Draai die afdigstuk met 'n moersleutel vas en wend die toepaslike krag in kolom 2 of kolom 3 van tabel 11, soos toepaslik, 1 min lank aan op die plek op die staaf 250 mm van die as van die afdigstuk af.

TABEL 11—KRAG WAT AANGEWEND MOET WORD

1	2	3
Diameter (D) van toetsstaaf, mm	Krag, N	
	Metaalafdigstukke	Afdigstukke van gevormde metaal
D ≤ 20	30	20
D > 20	40	30

21.2.2 *Toets B (Skouers in Leipypinlate).* Steun die toestel stewig sodat die as van die leipypinlaat vertikaal is; plaas 'n inrigting van die tipe in fig. 13 afgebeeld, op die skouer op die wyse wat in hierdie figuur aangetoon word en laat 'n massastuk van 250 g 10 maal van 'n hoogte van 150 mm op die toetsinrigting val.

22. KONSTRUKSIE

22.1 Die konstruksie en isolasie van 'n toestel moet in ooreenstemming wees met die klas beveiliging teen elektriese skok (kyk 2.1 en afdeling 8).

22.2 Die konstruksie van 'n toestel moet sodanig wees dat dit die toepaslike mate van beskerming teen vogindringing het (kyk 7.1 *(g)* en afdeling 15).

22.3 'n Toestel moet so gemaak wees dat dit in alle posisies wat met hoogstens 5° van die posisie tydens normale gebruik afwyk, nog ten volle sal werk.

22.4 'n Verplaasbare toestel moet so gemaak wees dat die indringing van 'n tafel of vloer af van voorwerpe wat aan die veiligheid van die toestel afbreuk kan doen, verhoed word. Die afstand, gemeet deur enige opening, tussen 'n lewendige deel en die steunoppervlak moet minstens 6 mm wees.

Daar word geag dat 'n toestel met pote aan bogenoemde vereiste voldoen indien die pote minstens 10 mm lank is in die geval van 'n toestel wat bedoel is om op 'n tafel geplaas te word en minstens 20 mm in die geval van 'n toestel wat bedoel is om op 'n vloer neergesit te word.

22.5 'n Toestel wat op verskillende spannings ingestel kan word, moet so gemaak wees dat die spanningsinstelling nie per abuis verander kan word nie.

22.6 'n Toestel moet so gemaak wees dat dit nie moontlik is om die instelling van 'n termostaat of ander beheerinrigting per abuis te verander indien dit tot gevaar kan lei nie.

22.7 'n Herstelknop van 'n nie-selfherstelkontrole moet so geplaas wees of beskerm wees dat toevallige herinstelling nie moontlik is indien dit tot gevaar kan lei nie.

22.8 'n Toestel wat voorsien is van integrerende penne wat bedoel is om in 'n vaste kontaksok gesteek te word, moet sodanig wees dat, volgens 22.8.1 getoets, die bykomende wringkrag wat aangewend moet word op die kontaksok om die insteekvlak op die vertikale vlak te hou, nie 0,25 N.m oorskry nie.

22.8.1 *Toets.* Steek die toestel soos vir gewone gebruik in 'n vaste kontaksok. Draai die kontaksok om 'n horisontale as deur die middellyne van die kontakbuise op 'n afstand van 8 mm agter die insteekvlak van die kontaksok en meet die bykomende wringkrag wat op die kontaksok aangewend moet word om die insteekvlak in die vertikale vlak te hou.

hammer head were to pass through the guard it will not strike the heating element. In assessing compliance with 21.1, ignore damage to the finish, small dents that do not reduce creepage distances and clearances below the relevant values specified in Table 22, small chips which do not adversely affect the protection against electric shock or moisture, cracks not visible to the unaided eye and surface cracks in fibre-reinforced mouldings and, if a decorative cover is backed by an inner cover, ignore fracture of the decorative cover if, after removal of this cover, the inner cover withstands the tes..

21.2 The mechanical strength of screwed glands and of shoulders in entries for conduit of nominal size 16 mm or 20 mm shall be such that, after testing in accordance with 21.2.1 or 21.2.2, as relevant, no deformation or damage that would cause non-compliance with other requirements of this specification is visible on a gland, an enclosure, or a conduit entry.

21.2.1 *Test A (Screwed Glands).* Fit the screwed gland under test with a cylindrical metal rod having a diameter equal to the nearest whole number below the internal diameter, in millimetres, of the packing. Then tighten the gland by means of a spanner, applying the appropriate force given in Column 2 or Column 3 of Table 11, as relevant, for 1 min at a point on the rod 250 mm from the axis of the gland.

TABLE 11—APPLIED FORCES

1	2	3
Diameter (D) of test rod, mm	Force, N	
	Metal glands	Glands of moulded material
D ≤ 20	30	20
D > 20	40	30

21.2.2 *Test B (Shoulders in Conduit Entries).* Support the appliance rigidly so that the axis of the conduit entry is vertical; place a device of the type shown in Fig. 13 on the shoulder in the manner shown in this figure and allow a mass of 250 g to fall 10 times through a height of 150 mm onto the test device.

22. CONSTRUCTION

22.1 The construction and insulation of an appliance shall be in accordance with its class of protection against electric shock (see 2.1 and section 8).

22.2 The construction of an appliance shall be such that it has the appropriate degree of protection against moisture (see 7.1 *(g)* and section 15).

22.3 An appliance shall be so constructed as to remain fully operative in all positions which deviate by not more than 5° from its position during normal use.

22.4 A portable appliance shall be so constructed that the penetration from a table or floor of objects capable of impairing the safety of the appliance is prevented, and the distance, measured through any opening, between a live part and the supporting surface, shall be at least 6 mm.

An appliance equipped with legs shall be deemed to comply with the above requirement if the legs have a length of at least 10 mm in the case of an appliance intended to be placed on a table, and at least 20 mm in the case of an appliance intended to be placed on the floor.

22.5 An appliance that can be adjusted to suit different voltages shall be so constructed that the voltage setting cannot be accidentally changed.

22.6 An appliance shall be so constructed that accidental changing of the setting of a thermostat or other control device is not possible if this can result in a hazard.

22.7 A reset button of non-self-resetting control shall be so located or protected that accidental resetting is not possible if this can result in a hazard.

22.8 An appliance provided with integral pins intended to be introduced into a fixed socket-outlet shall be such that, when tested in accordance with 22.8.1, the additional torque which has to be applied to the socket-outlet to maintain its engagement face in the vertical plane, shall not exceed 0,25 Nm.

22.8.1 *Test.* Insert the appliance, as in normal use, into a fixed socket-outlet. Pivot the socket-outlet about a horizontal axis through the centre lines of the contact tubes at a distance of 8 mm behind the engagement face of the socket-outlet, and measure the additional torque which has to be applied to the socket-outlet to maintain the engagement face in the vertical plane.

22.9 Die ontwerp van die integrerende penne van 'n toestel vir die verhitting van vloeistof of 'n motorgedrewe toestel wat vibreer wanneer die penne in 'n sok ingesteek word, mag nie van die tipe wees wat bedoel is om in vaste kontaksokke ingesteek te word nie.

22.10 Dit moet nie moontlik wees om sonder die hulp van gereedskap 'n deel wat die toepaslike mate van beskerming teen vogindringing verseker, te verwyder nie.

22.11 'n Toestel moet so gemaak wees dat die elektriese isolasie daarvan nie beinvloed kan word as water op koue oppervlakke kondenseer of uitlek uit houers, slange, koppelings of ander moontlike bronne van lekkasie wat deel uitmaak van die toestel nie. Die elektriese isolasie van 'n klas II-toestel mag nie beinvloed word as 'n slang breek nie en ook nie deur lekkasie wat deur die faling van 'n seël veroorsaak is nie.

22.12 Indien 'n handvatsel, knop, greepstuk, hefboom of soortgelyke kontrole-inrigting gebruik word om die posisie van 'n skakelaar of soortgelyke komponent aan te dui, mag dit nie moontlik wees om hulle in die verkeerde posisie vas te sit indien dit tot gevaar kan lei nie. Hierbenewens moet 'n handvatsel, knop, greepstuk, hefboom of soortgelyke kontrole-inrigting wat gevaar kan veroorsaak indien dit tydens gewone gebruik losraak, die toets in 22.12.1 deurstaan sonder om los te raak.

22.12.1 *Toets.* Wend 1 min lank op die deel wat getoets moet word, die toepaslike van die volgende aksiale trekkragte aan:

(a) Indien die fatsoen van die deel sodanig is dat dit onwaarskynlik is dat aksiale trekkrag tydens gewone gebruik daarop uitgeoefen sal word, wend 'n krag van 15 N aan indien die deel gebruik word om die elektriese komponente te laat werk en 20 N in ander gevalle.

(b) Indien die fatsoen van die deel sodanig is dat dit waarskynlik is dat aksiale trekkrag gedurende normale gebruik daarop aangewend sal word, wend 'n krag van 30 N aan indien die deel gebruik word om die elektriese komponent te laat werk en 50 N in ander gevalle.

22.13 Komponente wat moontlik vervang moet word, soos skakelaars en kapasitors, moet op so 'n wyse aangebring wees dat hul vervanging nie skade aan die monteer- en verbindtoestelle sal aanrig nie. Vasheg-ting deur middel van soldering mag nie toegelaat word nie behalwe in die geval van komponente soos klein resistors, kapasitors en induktors en dan slegs indien hierdie komponente stewig bevestig kan word deur middel van soldering.

22.14 Bewaarhake en soortgelyke borginrigtings vir buigbare kabels of koorde moet glad en goed gerond wees. 'n Kabeltol moet so ontwerp wees dat—

(a) dit die toets in 22.14.1 *(a)* deurstaan en daar na afloop van die toets geen onaanneemlike skuurmerke of ander beskadiging aan die koordmantel of skade aan die geleiers is nie en dat daar geen teken van onaanneemlike slytasie van beweegbare en stilstaande kontakte is nie; en

(b) as die koord daarna aan die toets vir elektriese sterkte aangegee in 22.14.1 *(b)* onderwerp word, daar geen oorvonking of deurslag is nie.

22.14.1 *Toets*

(a) Rol minstens 0,75 van die toevoerkabel of -koord af en laat dit outomaties weer op die tol terugrol. Doen dit 6 000 maal teen 'n tempo wat sodanig is dat enige toename in die temperatuur van die kabel of koord onbeduidend is en trek die kabel of koord in 'n rigting wat sodanig is dat die grootste skuurwerking op die mantel is en dat, op die plek waar dit uit die toestel kom, die kabel of koord 'n buiging van ongeveer 60° vorm of, indien dit nie terugrol wanneer die hoek 60° is nie, die maksimum hoek waaronder outomatiese terugrol moontlik is.

(b) Na ondersoek vir voldoening aan 22.14 *(a)*, onderwerp die kabel of koord aan 'n toets vir elektriese sterkte soos aangegee in 16.1.3, met gebruik van 'n spanning van 1 000 V wat tussen die geleiers van die kabel of koord wat saam verbind is en die metaaldele van die tol aangelê word of, indien die tol van isoleermateriaal is, die metaalfoelie wat in aanraking met die tol is.

22.15 Vlambare materiaal soos selluloïde mag nie in die konstruksie van toestelle gebruik word nie.

22.16 Daar moet nie op 'n dryfband staat gemaak word om elektriese isolasie te verseker nie, tensy dit van 'n ontwerp is wat die risiko van verkeerde vervanging uitsluit.

22.17 'n Toestel, uitgesonderd 'n klas III-toestel, met dele waar daar staat gemaak word op ekstra lae veiligheidspanning om die nodige mate van beveiliging teen elektriese skok te verskaf, moet so ontwerp en gemaak wees dat die isolasie tussen dele wat by ekstra lae veiligheidspanning werk en ander lewendige dele aan die vereistes vir klas II-toestel voldoen. 'n Veiligheidsisoleer-transformator moet aan die vereistes in aanhangsel C voldoen.

22.18 Versterkte isolasie mag slegs gebruik word waar dit nie prakties moontlik is om afsonderlike basiese isolasie en aanvullende isolasie te verskaf nie.

22.19 Dele van 'n klas II-toestel wat as aanvullende isolasie of versterkte isolasie dien en wat tydens hermontering na roetineversiening weggelaat kan word, moet of—

22.9 The design of the integral pins of an appliance for heating liquids or a motor-operated appliance that vibrates when the pins are inserted into a socket shall not be of the type that are intended to be introduced into fixed socket-outlets.

22.10 It shall not be possible to remove, without the aid of a tool, a part that ensures the appropriate degree of protection from moisture.

22.11 An appliance shall be so constructed that its electrical insulation cannot be affected by water condensing on cold surfaces, or by leaking from containers, hoses, couplings or other possible sources of leakage that are a part of the appliance, and the electrical insulation of a Class II appliance shall not be affected by the rupture of a hose or leakage caused by failure of a seal.

22.12 If a handle, knob, grip, lever, or similar control device is used to indicate the position of a switch or similar component, it shall not be possible to fix them in the wrong position if this can result in a hazard. Furthermore, a handle, knob, grip, lever or similar control device that could cause a hazard if it works loose in normal use shall withstand the test given in 22.12.1 without loosening.

22.12.1 *Test.* To the part to be tested apply, for 1 min, the appropriate of the following axial forces:

(a) If the shape of the part is such that an axial pull is unlikely to be applied to it in normal use, apply a force of 15 N if the part is a means of operating electrical components, and 20 N in other cases.

(b) If the shape of the part is such that an axial pull is likely to be applied to it in normal use, apply a force of 30 N if the part is a means of operating electrical components, and 50 N in other cases.

22.13 Components which may require replacement, such as switches and capacitors, shall be fixed in such a way that their replacement does not damage mounting and connecting devices. Securing by means of solder shall not be allowed except in the case of components such as small resistors, capacitors, and inductances, and then only if these components can be securely fixed by soldering.

22.14 Storage hooks and similar retaining devices for flexible cables or cords shall be smooth and well rounded. A cord reel shall be so designed that—

(a) it withstands the test given in 22.14.1 *(a)* and there is at the conclusion of the test, no unacceptable abrasion or other damage to the cord sheath or breakage of the conductors, and no evidence of unacceptable wear of movable of stationary contacts; and

(b) when the cord is then subjected to the electric strength test given in 22.14.1 *(b)*, no flashover or breakdown shall occur.

22.14.1 *Test*

(a) Unreel at least 0,75 m of the supply cable or cord and allow it to recoil automatically on to the reel. Perform this operation 6 000 times, at a rate such that any increase in the temperature of the cable or cord is negligible, pulling the cable or cord in a direction such that the sheath suffers the greatest abrasion and that, at the place where it leaves the appliance, the cable or cord forms a bend of approximately 60° or, if it does not recoil when the angle is 60°, the maximum angle at which automatic recoil is possible.

(b) After examining it for compliance with 22.14 *(a)*, subject the cable or cord to an electric strength test as given in 16.1.3, using a voltage of 1 000 V applied between the conductors of the cable or cord connected together and the metal parts of the reel or, if the reel is made of insulating material, metal foil in contact with the reel.

22.15 A flammable material such as celluloid shall not be used in the construction of appliances.

22.16 A driving belt shall not be relied on to ensure electrical insulation unless it is of a design that precludes the risk of inappropriate replacement.

22.17 An appliance, other than a Class III appliance, having sections where reliance is placed upon safety extra-low voltage to provide the necessary degree of protection from electric shock, shall be so designed and constructed that the insulation between parts operating at safety extra-low voltage and other live parts, complies with the requirements for a Class II appliance. A safety isolating transformer shall comply with the requirements given in Annexure C.

22.18 Reinforced insulation shall only be used where the provision of separate basic insulation and supplementary insulation is impracticable.

22.19 Parts of a Class II appliance which serve as supplementary insulation or reinforced insulation and which might be omitted during reassembly after routine servicing, shall be either—

(a) so bevestig wees dat hulle nie verwyder kan word sonder om ernstige skade op te doen nie; of

(b) so ontwerp wees dat hulle nie op die verkeerde plek teruggeplaas kan word nie en dat, indien hulle weggelaat word, die toestel nie sal werk nie of klaarblyklik onvolledig saamgestel is.

Hulse kan egter as aanvullende isolasie op binnebedrading gebruik word indien dit op albei ente vas is of op positiewe wyse so in posisie gehou word dat dit slegs verwyder kan word deur dit te breek of te snij.

22.20 Binne 'n toestel mag die mantel van 'n buigsame kabel of koord nie as aanvullende isolasie gebruik word nie, tensy die isoleereienskappe daarvan minstens gelyk is aan dié wat in Bylae 4 van Goewermentskennisgewing R.1615 van 22 Oktober 1965 gespesifiseer is en die kabel of koord so geplaas is dat dit nie aan meganiese of termiese spanning bo dié wat tydens gewone gebruik voorkom, onderwerp sal word nie.

22.21 'n Klas II-toestel moet—

(a) so ontwerp wees dat kruipafstande en vry ruimtes oor aanvullende isolasie of versterkte isolasie nie as gevolg van slytasie tot onder die toepaslike minimum waardes gespesifiseer in 29.1 verminder word nie; en

(b) so gemaak wees dat, volgens 22.21.1 ondersoek, 'n draad, skroef, moer, wasser, veer of soortgelyke deel wat losraak en uit sy plek val, nie tydens normale gebruik so verplaas word dat kruipafstande of vry ruimtes oor aanvullende isolasie of versterkte isolasie tot minder as 50% van die waardes gespesifiseer in 29.1 verminder word nie.

22.21.1 *Toets.* By nagaan vir voldoening aan 22.21 *(b)*,

(a) neem aan dat twee onafhanklike bevestigers nie op dieselfde tyd losraak nie;

(b) neem aan dat die volgende waarskynlik nie sal losraak nie:

(1) 'n Deel wat met 'n skroef of skroewe bevestig is of 'n moer of moere wat van sluitwasters voorsien is en wat nie tydens vervanging van die buigsame toevoerkabel of -koord of ander roetineversiening verwyder hoef te word nie; en

(2) 'n borseldop wat aan die vereistes van 22.33 voldoen;

(c) word die volgende nie as behoorlik bevestig beskou nie:

(1) 'n Draad wat deur middel van soldering verbind is, tensy dit naby die eindpunt deur bykomende middele wat onafhanklik van die soldeersel is, in posisie gehou word;

(2) 'n draad wat met 'n aansluiter verbind is, tensy 'n bykomende bevestiger naby die aansluiter verskaf word en mits, in die geval van 'n stringgeleier, hierdie bykomende bevestiger die isolasie en nie net die geleier nie vasklem;

(d) moet daar nie geag word dat 'n kort stewige draad waarskynlik van 'n aansluiter los sal raak nie indien dit in posisie bly as die aansluitskroef losgedraai word.

22.22 Aanvullende isolasie en versterkte isolasie moet so ontwerp en beskerm wees dat hulle nie in so 'n mate deur die ophoping van vullis of deur stof as gevolg van slytasie van dele binne die toestel benadeel word dat kruipafstande en vry ruimtes tot onder die toepaslike waardes gespesifiseer in 29.1 verminder word nie.

Krale of keramiekmateriaal wat nie styfgesinter is nie, mag nie alleen as aanvullende of versterkte isolasie gebruik word nie. Isoleermateriaal waarin verhittingsgeleiers ingebed is, word geag basiese isolasie te wees en mag nie as versterkte isolasie gebruik word nie.

Komponente van natuurlike of sintetiese rubber, wat as aanvullende isolasie in 'n klas II-toestel gebruik word,

(a) moet bestand wees teen veroudering en moet die behandeling in 22.22.1 deurstaan sonder enige tekens van barste wat aan die blote oog sigbaar is nie; en

(b) moet so gerangskik en van sodanige afmetings wees dat kruipafstande nie tot onder die waardes gespesifiseer in 29.1 verminder word nie.

22.22.1 *Toets.* Verouder rubberkomponente wat as aanvullende isolasie in 'n klas II-toestel gebruik word in 'n atmosfeer van suurstof onder druk deur hulle vrylik in 'n suurstofhouer te laat hang waarvan die effektiewe inhoudsvermoë minstens 10 maal die volume is van die komponent(e) wat getoets word. Maak die houer vol kommersiële suurstof, met 'n suiwerheid van minstens 97%, tot 'n druk van 2 100 ± 70 kPa. Hou die houer dan 96 uur lank by 'n temperatuur van 70 ± 1 °C (tref alle voorsorgmaatreëls om die risiko van 'n ontploffing as gevolg van skielike oksidasie te vermy). Haal onmiddellik daarna die komponent(e) uit die houer en laat dit minstens 16 uur lank by omgewingstemperatuur; vermy blootstelling aan regstreekse sonlig. Ondersoek die komponent(e) dan vir voldoening aan die vereistes van 22.2 *(a)*.

22.23 Regstreekse kontak tussen kaal lewendige dele en termiese isolasie wat brandbaar, higroskopies of korroderend (soos ongeïmpregneerde slakwol) is, moet op doeltreffende wyse voorkom word.

22.24 Handvatsels moet so gemaak wees dat as dit tydens normale gebruik vasgehou word, daar geen kontak is tussen die bediener se hand en komponente waar 'n temperatuurstyging voorkom wat die toepaslike maksimum waardes aangegee in tabel 2 vir handvatsels wat tydens gewone gebruik vir kort tydperke gehou word, oorskry nie.

22.25 Oop verhittingselemente in 'n klas II-toestel en, in die geval van ander toestelle, oop verhittingselemente wat sigbaar gloei tydens

(a) so fixed that they cannot be removed without being seriously damaged; or

(b) so designed that they cannot be replaced in an incorrect position, and that, if they are omitted, the appliance is rendered inoperable or is obviously incompletely assembled.

Sleeving may, however, be used as supplementary insulation on internal wiring, if it is secured at both ends or is retained in position by positive means that are such that it can only be removed by breaking or cutting.

22.20 Inside an appliance, the sheath (or jacket) of a flexible cable or cord shall not be used as supplementary insulation unless its insulating properties are at least equal to those specified in Schedule 4 of Government Notice R.1615 dated 22 October 1965, and the cable or cord is so located that it will not be subjected to mechanical or thermal stresses in excess of those that occur in normal use.

22.21 A Class II appliance shall be—

(a) so designed that creepage distances and clearances over supplementary insulation or reinforced insulation cannot, as a result of wear, be reduced to below the relevant minima specified in 29.1; and

(b) so constructed that, when examined in accordance with 22.21.1, a wire, screw, nut, washer, spring or similar part that becomes loose or falls out of position cannot, in normal use, become so displaced that creepage distances or clearances over supplementary insulation or reinforced insulation are reduced to less than 50% of the values specified in 29.1.

22.21.1 *Test.* When checking for compliance with 22.21 *(b)*,

(a) assume that two independent fixings will not become loose at the same time;

(b) regard as not liable to become loose—

(1) a part fixed be means of a screw or screws, or a nut or nuts that are provided with locking washers and that are not required to be removed during the replacement of the supply flexible cable or cord or other routine servicing; and

(2) a brush cap complying with the requirements of 22.33;

(c) do not consider as adequately secured—

(1) a wire connected by soldering, unless it is held in place near to the termination by additional means that are independent of the solder;

(2) a wire connected to a terminal, unless an additional fixing is provided near to the terminal and that, in the case of stranded conductor, that this additional fixing clamps the insulation and not only the conductor;

(d) do not regard a short rigid wire as liable to come away from a terminal if it remains in position when the terminal screw is loosened.

22.22 Supplementary insulation and reinforced insulation shall be so designed or protected that they are not impaired by the deposition of dirt or by dust resulting from wear or parts within the appliance, to such an extent that creepage distances and clearances are reduced to below the relevant values specified in 29.1.

Beads or a ceramic material that is not tightly sintered, shall not be used alone as supplementary or reinforced insulation. Insulating material in which heating conductors are embedded shall be considered to be basic insulation and shall not be used as reinforced insulation.

Natural or synthetic rubber components used as supplementary insulation in a Class II appliance shall be—

(a) resistant to aging and shall withstand the treatment prescribed in 22.22.1 without showing any cracks visible to the unaided eye; and

(b) so arranged and dimensioned that creepage distances are not reduced below the values specified in 29.1.

22.22.1 *Test.* Age rubber components used as supplementary insulation in a Class II appliance in an atmosphere of oxygen under pressure by suspending them freely in an oxygen bomb, the effective capacity of which is at least 10 times the volume of the component(s) under test. Fill the bomb with commercial oxygen, of purity at least 97%, to a pressure of 2 100 ± 70 kPa. Then maintain the bomb at a temperature of 70 ± 1°C for 96 h (taking all precautions to avoid the risk of an explosion due to sudden oxidation). Immediately afterwards, remove the component(s) from the bomb and leave them at ambient temperature, avoiding exposure to direct sunlight, for at least 16 h, and then examine the component(s) for compliance with the requirements of 22.22 *(a)*.

22.23 Direct contact between bare live parts and thermal insulation that is combustible, hygroscopic, or corrosive (such as unimpregnated slag-wool) shall be effectively prevented.

22.24 Handles shall be so constructed that, when gripped as in normal use, contact shall not occur between the operator's hand and components having a temperature rise exceeding the relevant maximum given in Table 2 for handles that, in normal use, are held for short periods only.

22.25 Open heating elements in a Class II appliance and, in the case of other appliances, open heating elements that glow visibly in normal

gewone gebruik, moet op so 'n wyse gesteun wees dat, volgens 22.25.1 getoets, die verhittingsgeleier nie met enige bereikbare metaaldeel in aanraking kom nie.

22.25.1 *Toets*. Na voltooiing van die toets in 29.1.1, snij, op die ongunstigste plek, die verhittingsgeleier van elke oop verhittingselement in die geval van 'n klas II-toestel en, in ander gevalle, elke oop verhittingselement wat sigbaar gloei, met inbegrip van sodanige elemente wat nie van die buitekant van die toestel af sigbaar is nie, en gaan na vir voldoening aan die vereiste van 22.25.

22.26 Klas O, OI- en II-toestelle moet so gemaak wees dat afsakking van verhittingsgeleiers nie bereikbare metaaldele lewendig sal maak nie.

22.27 'n Toestel wat tydens normale gebruik vloeistof bevat of van 'n stoomproduserende inrigting voorsien is, moet op aanneemlike wyse beveilig wees teen die risiko dat buitensporige druk ontwikkel.

22.28 Spasieerders wat bedoel is om te verhoed dat 'n toestel mure en ander omringende oppervlakke oorverhit, moet so bevestig wees dat dit nie moontlik is om hulle van buite die toestel af met behulp van 'n skroewedraaier of moersleutel te verwyder nie.

22.29 Stroomdraende dele en ander metaaldele wat gevaar kan inhou as dit korrodeer, moet korrosiebestand wees in normale gebruikstoestande. Nadat 'n toestel aan al die toepaslike toetse in afdeling 19 onderwerp is, mag stroomdraende dele geen teken van korrosie toon nie.

22.30 In 'n klas II-toestel wat tydens normale gebruik met die gas- of watertoevoernet verbind is, moet die metaaldele wat geleidend met die gas- of waterpype verbind gaan word of wat met water in aanraking kan kom, van lewendige dele geskei wees deur dubbelisolasie of versterkte isolasie.

Hierbenewens moet 'n klass II- vaste toestel so ontwerp wees dat die vereiste mate van beveiliging teen elektriese skok volgehou word tydens die installering van die toestel.

22.31 In 'n toestel met 'n kompartement waartoe toegang verkry kan word sonder die hulp van gereedskap en wat waarskynlik in normale gebruik skoongemaak gaan word, moet die elektriese verbindings so gerangskik wees dat hulle nie aan spanning gedurende gebruikerinstandhouding onderwerp sal word nie.

22.32 'n Toestel moet so gemaak wees dat binnebedrading, wikkelings, kommutators, sleepringe en isolasie nie aan olie of vetterigheid blootgestel word nie, behalwe dat waar blootstelling aan olie of vetterigheid onvermydelik is (soos in die geval van ratte en soortgelyke meganiese dele), moet die isoleereienskappe van die olie of smeermiddel wat gebruik word, sodanig wees dat die toestel aan die vereistes van afdeling 13 en 16 kan voldoen.

22.33 Dit moet nie moontlik wees om toegang sonder die gebruik van gereedskap te verkry tot borsels terwyl hulle lewendig is nie.

'n Skroeftipe borseldop moet teen 'n skouer of soortgelyke stootstuk inskroef en moet oor minstens twee volle skroefdrade vas kroef. In die geval van 'n borselhouer wat die borsel met behulp van 'n sluitinrigting in posisie hou, moet die borselhouer so ontwerp wees dat die sluiting nie van die spanning van die borselveer afhang indien die losraking van die sluitinrigting bereikbare metaaldele lewendig sal maak nie. 'n Skroeftipe borseldop wat van die buitekant van 'n toestel af bereik kan word, moet van isoleermateriaal wees of moet met isoleermateriaal bedek wees of moet (in albei gevalle) oor genoegsame meganiese sterkte beskik om aan die vereistes van 21.1 te voldoen en mag nie by die omringende oppervlak van die toestel uitsteek nie.

22.34 Radio- en televisiesteuringsonderdrukkers moet op so 'n wyse aangebring wees dat hulle teen meganiese beskadiging beskerm word wanneer die toestel in sy normale gebruiksposisie is.

23. BINNEBEDRADING

23.1 Bedradingskanale moet glad en vry van puntige rande wees. Die drade moet op so 'n wyse beskerm wees dat hulle nie in aanraking kan kom met brame, koelvinne en ander uitsteeksels wat skade aan die isolasie van geleiers kan veroorsaak nie. 'n Gat in metaal waardeur geïsoleerde drade gaan, moet gladde, goed geronde oppervlakke hê en moet van 'n bus voorsien wees. Bedrading moet op doeltreffende wyse beskerm wees om te verhoed dat dit met bewegende dele in aanraking kom.

23.2 Binnebedrading en elektriese binneverbindings tussen verskillende dele van die toestel moet so beskerm of omhul wees dat die moontlikheid dat hulle 'n gevaar kan uitmaak, uitgesluit word.

23.3 Krale en soortgelyke keramiekisolators op lewendige drade moet so bevestig of gesteun wees dat hulle nie van posisie kan verander nie en dat hulle nie op puntige rande of skerp hoeke rus nie. Krale binne 'n buigsame metaalleipyp moet, tensy die leipyp tydens normale gebruik van die toestel nie geskuif kan word nie, in 'n isoleerhuls gehuisves wees.

23.4 Indien 'n buigsame metaalbuis gebruik word vir die beskerming van geleiers wat tussen die komponente van 'n toestel verbind is, moet die relatiewe beweging van hierdie komponente so begrens wees dat daar gedurende die toets in 23.4.1 geen oorvonking of deurslag is nie en dat nòg die toestel nòg die isolasie van die geleiers na afloop van die toets enige tekens van skade toon wat kan veroorsaak dat dit nie aan die ander vereistes van hierdie spesifikasie voldoen nie.

use, shall be so supported that, when tested in accordance with 22.25.1, the heating conductor does not come into contact with any accessible metal part.

22.25.1 *Test*. After completing the test given in 29.1.1, cut, in the most unfavourable place, the heating conductor of each open heating element in the case of a Class II appliance and, in other cases, each open heating element that glows visibly, including such elements that are not visible from the outside of the appliance, and check for compliance with the requirement of 22.25.

22.26 Class O, OI and II appliances shall be so constructed that sagging of heating conductors cannot make accessible metal parts live.

22.27 An appliance which in normal use contains liquid, or is provided with a steam-producing device, shall incorporate an acceptable safeguard or safeguards against the risk of the development of excessive pressure.

22.28 Spacers intended to prevent an appliance from overheating walls and other surrounding surfaces, shall be so fixed so that it is not possible to remove them from the outside of the appliance by means of a screw-driver or spanner.

22.29 Current-carrying parts and other metal parts, the corrosion of which can result in a hazard, shall be resistant to corrosion under normal conditions of use, and after an appliance has been subjected to all the relevant tests given in section 19, they shall show no sign of corrosion.

22.30 In a Class II appliance which in normal use is connected to the gas- or water-supply mains, the metal parts that are to be conductively connected to the gas or water pipes or that may come into contact with water, shall be separated from live parts by double insulation or reinforced insulation.

In addition, a Class II fixed appliance shall be so designed that the required degree of protection from electric shock is maintained during the installation of the appliance.

22.31 In an appliance that has a compartment to which access can be gained without the aid of a tool, and which is likely to be cleaned in normal use, the electrical connections shall be so arranged that they are not subject to tension during user maintenance.

22.32 An appliance shall be so constructed that internal wiring, windings, commutators, slip rings, and insulation are not exposed to oil or grease, except that, where exposure to oil or grease is unavoidable (as in the case of gears and similar mechanical parts), the insulating properties of the oil or grease used shall be such as to enable the appliance to comply with the requirements of sections 13 and 16.

22.33 It shall not be possible to gain access, without the aid of a tool, to brushes while they are live.

A screw-type brush-cap shall screw home against a shoulder or similar abutment, and shall engage by at least two full threads. In the case of a brush-holder that retains the brush in position by means of a locking device, if loosening of the locking device might make accessible metal parts live, the brush-holder shall be so designed that the locking does not depend upon the tension of the brush spring. A screw-type brush-cap that is accessible from the outside of an appliance shall be of insulating material, or shall be covered with insulating material, of (in both cases) sufficient mechanical strength to comply with the requirements of 21.1, and shall not project beyond the surrounding surface of the appliance.

22.34 Radio and television interference suppressors shall be so fitted that they are protected from mechanical damage when the appliance is in its position of normal use.

23. INTERNAL WIRING

23.1 Wire-ways shall be smooth and free from sharp edges. Wires shall be protected so that they cannot come into contact with burrs, cooling fins, and other projections which are capable of causing damage to the insulation of conductors. A hole in metal through which insulated wires pass shall have smooth well-rounded surfaces or shall be provided with a bushing. Wiring shall be effectively protected from coming into contact with moving parts.

23.2 Internal wiring and internal electrical connections between different parts of the appliance shall be so protected or enclosed as to preclude the possibility of their constituting a hazard.

23.3 Beads and similar ceramic insulators on live wires shall be so fixed or supported that they cannot change their position or rest on sharp edges or sharp corners. Beads inside a flexible metal conduit shall, unless the conduit cannot move in normal use of the appliance, be housed in an insulating sleeve.

23.4 If a flexible metal tube is used for the protection of conductors connected between the components of an appliance, the relative movement of these components shall be so limited that during the test given in 23.4.1 no flashover or breakdown occurs and, after the completion of the test, neither the appliance nor the insulation of the conductors shows any damage which could cause it to fail to comply with the other

CONT

University of Fort Hare
Together in Excellence

Indien die metaalbuis in die vorm van 'n kronkelveer is, mag dit nie van die oop kronkeltipe wees nie en indien die windings aan mekaar raak, moet die buis 'n aanneemlike isoleervoering hê om die basiese isolasie op die geleiers aan te vul

23.4.1 *Toets.* Plaas die toestel in sy normale gebruiksposisie en laat dit teen aangeslane spanning of teen die boonste grens van die aangeslane spanningsbestek, soos toepaslik, werk in toestande van voldoende hittevrystelling of onder normale belasting of albei.

Onderwerp die meer beweegbare komponente waaraan die metaalbuis of -veer bevestig is, aan 10 000 buigings teen 'n tempo van 30 buigings per minuut. Elke buiging bestaan uit een beweging na agter of vorentoe wat sodanig is dat die buis of veer deur die grootste hoek wat deur die ontwerp toegelaat word, gebuig word. Laat die toestel tot ongeveer omgewingstemperatuur afkoel en lê dan 'n spanning van wesenlik sinusgolfvorm by 'n frekwensie van 50 Hz en 'n waarde van 1 000 V, 1 min lank tussen die metaal van die buigsame buis of veer en die geleiers daarin aan.

23.5 Binnebedrading en verhittingsgeleiers moet of so stewig wees en so bevestig wees of so geïsoleer wees dat die kruipafstande en vry ruimtes tydens normale gebruik van die toestel nie onder die waardes gespesifiseer in 29.1 verminder kan word nie.

Die isolasie, indien daar is, van die bedrading en geleiers moet sodanig wees dat dit nie tydens normale gebruik beskadig kan word nie en as dit elektries nie minstens gelyk is aan dié van kabels en koorde wat aan die vereistes in Bylae 4 van Goewermentskennisgewing R.1615 van 22 Oktober 1965 voldoen nie, word 'n geleier as 'n kaal geleier beskou.

23.6 'n Geleier wat deur die kleurkombinasie groen en geel geïdentifiseer word, mag nie met 'n aansluiter, uitgesonderd 'n aardingsaansluiter, verbind word nie.

23.7 In die geval van 'n toestel wat bedoel is om blywend met vaste bedrading verbind te wees, moet die onderste kontak van 'n D-tipe sekeringsbasis regstreeks met die aansluiter wat bedoel is vir die fasegeleier van die toevoer verbind wees.

23.8 Aluminiumdraad mag nie vir binnebedrading gebruik word nie. 'n Motorwikkeling word nie as binnebedrading beskou nie.

23.9 Die isolasie van 'n geïsoleerde geleier wat tydens normale gebruik van die toestel aan 'n temperatuurstyging van meer as 50 °C onderwerp word, moet van hittebestande materiaal wees indien agteruitgang van die isolasie aan voldoening aan hierdie spesifikasie afbreuk kan doen.

24 KOMPONENTE

24.1 Komponente moet aan die veiligheidsvereistes van die toepaslike verpligte standaardspesifikasie voldoen. Indien die werkeienskappe op 'n komponent aangebring is, moet die toestand waaronder dit in die toestel gebruik word, in ooreenstemming met hierdie merke wees.

'n Komponent waarop afsonderlike aanslagwaardes nie aangebring is nie, moet getoets word in die toestande wat in die toestel voorkom.

'n Kapasitor wat in serie verbind is met 'n motorwikkeling, moet sodanig wees dat, wanneer die toestel onder minimum belasting teen 1,1 maal die aangeslane spanning werk, die spanning wat oor die kapasitor voorkom, nie groter as 1,1 maal die aangeslane spanning is nie (kyk 7.2 (*c*)).

24.2 'n Toestel mag nie voorsien wees nie van—

(a) 'n skakelaar in die buigsame koord of kabel, tensy dit in die spesifieke vereistes vir die toepaslike toestel wat getoets word, toegelaat word;

(b) 'n inrigting wat in geval van 'n fout in die toestel veroorsaak dat die toevoer deur 'n kortsluiting onderbreek word;

(c) 'n termiese uitskakelaar wat weer ingestel kan word deur soldering.

24.3 'n Skakelaar, uitgesonderd een wat vir 'n kliklamp gebruik word, wat regstreeks verbind is met die toevoeraansluiters van 'n staande toestel, moet alle pole ontkoppel en moet, tensy daar anders aangedui word in die installeringsaanwysings wat volgens 7.12 verskaf is, 'n kontakskeiding van minstens 3 mm hê.

24.4 'n Kontakprop-en-sok wat as 'n aansluitingsinrigting vir 'n verhittingselement gebruik word en 'n kontakprop-en-sok vir 'n baan met ekstra lae spanning mag nie omruilbaar wees nie met 'n kontakprop-en-sok wat aan die vereistes van Bylae 6 van Goewermentskennisgewing R.1615 van 22 Oktober 1965 voldoen of met 'n verbinder en toestelinlaat wat aan die vereistes van Bylae 10 van hierdie Goewermentskennisgewing voldoen.

24.5 'n Kontakprop-en-sok of ander verbindinrigting op 'n buigsame kabel of koord wat vir tussenverbinding tussen verskillende dele van 'n toestel gebruik word, mag nie omruilbaar wees nie met 'n kontakprop-en-sok wat aan Bylae 6 van Goewermentskennisgewing R.1615 van 22 Oktober 1965 voldoen of met 'n verbinder en toestelinlaat wat aan Bylae 10 van hierdie Goewermentskennisgewing voldoen, indien regstreekse toevoer na hierdie dele van die kragnet af gevaar vir persone of die omgewing inhou of kan veroorsaak dat die toestel beskadig word.

24.6 'n Lamphouer mag slegs vir die verbinding van 'n lamp gebruik word.

requirements of this specification. If the metallic tube is in the form of a coiled spring, it shall not be of the open-coil type and, if the turns are touching one another, the tube shall have an acceptable insulating lining to supplement the basic insulation on the conductors.

23.4.1 *Test.* Place the appliance in its normal position of use and operate it at rated voltage, or at the upper limit of the rated voltage range, as relevant, in conditions of adequate heat discharge, or under normal load, or both.

Subject the more movable of the components to which the metallic tube or spring is fixed, to 10 000 flexings applied at a rate of 30 flexings per minute, each flexing being one movement backwards or forwards, that is such that the tube or spring is flexed through the largest angle permitted by the design. Allow the appliance to cool down to approximately ambient temperature, and then apply a voltage, of substantially sine-wave form, having a frequency of 50 Hz and a value of 1 000 V, for 1 min between the metal of the flexible tube or spring and the conductors contained in it.

23.5 Internal wiring and heating conductors shall be either so rigid and so fixed, or so insulated that in normal use of the appliance creepage distances and clearances cannot be reduced below the values specified in 29.1.

The insulation, if any, on the wiring and conductors shall be such that it cannot be damaged in normal use and, unless it is at least electrically equivalent to that of cables and cords complying with the requirements given in Schedule 4 of Government Notice R.1615 dated 22 October 1965, a conductor shall be considered to be a bare conductor.

23.6 A conductor identified by the colour combination green-and-yellow shall not be connected to a terminal other than an earthing terminal.

23.7 In an appliance intended to be permanently connected to fixed wiring, the bottom contact of a D-type fuse base shall be directly connected to the terminal intended for the phase conductor of the supply.

23.8 Aluminium wire shall not be used for internal wiring. A motor winding shall not be considered to be internal wiring.

23.9 The insulation of an insulated conductor that in normal use of the appliance is subjected to a temperature rise exceeding 50 °C shall, if compliance with this specification can be impaired by deterioration of the insulation, be of a heat-resisting material.

University of Fort Hare
Together in Excellence

24 COMPONENTS

24.1 Components shall comply with the safety requirements of relevant compulsory standard specifications. If a component is marked with its operating characteristics, the conditions under which it is used in the appliance shall be in accordance with these markings.

A component not marked with individual ratings shall be tested under the conditions occurring in the appliance.

A capacitor that is connected in series with a motor winding shall be such that when the appliance is operated under minimum load at 1,1 times rated voltage, the voltage appearing across the capacitor shall not be greater than 1,1 times its rated voltage (see 7.2 (*c*)).

24.2 An appliance shall not be fitted with—

(a) a switch in its flexible cable or cord, unless permitted in terms of the specific requirements for the relevant appliance being tested;

(b) a device that, in the event of a fault in the appliance, causes the interruption of the supply by applying a short-circuit;

(c) a thermal cut-out that can be reset by soldering.

24.3 A switch, other than one used for a pilot lamp, that is directly connected to the supply terminals of a stationary appliance shall disconnect all poles and, unless otherwise stated in installation instructions supplied in terms of 7.12, shall have a contact separation of at least 3 mm.

24.4 A plug-and-socket-outlet used as a terminal device for a heating element, and a plug-and-socket-outlet for an extra-low voltage circuit shall not be interchangeable with a plug-and-socket-outlet complying with the requirements of Schedule 6 of Government Notice R.1615 of 22 October 1965, or with a connector and appliance inlet complying with the requirements of Schedule 10 of this Government Notice.

24.5 A plug-and-socket-outlet or other connecting device on a flexible cable or cord used for an intermediate connection between different parts of an appliance shall not, if direct supply of these parts from the mains could cause danger to persons or surroundings or damage to the appliance, be interchangeable with a plug-and-socket-outlet complying with Schedule 6 of Government Notice R.1615 of 22 October 1965, or with a connector and appliance inlet complying with Schedule 10 of this Government Notice.

24.6 A lampholder shall be used only for the connection of a lamp.

24.7 In die geval van 'n glimontladinglamp met „E10"-dop wat as aanwyslamp gebruik word, moet die serieresistor deel van die toestel uitmaak.

24.8 'n Kapasitor mag nie tussen die kontakte van 'n termiese uitskakelaar verbind wees nie.

24.9 'n Motorgedrewe toestel wat tydens normale gebruik verskuif word terwyl dit in werking is, moet voorsien wees van 'n skakelaar in die toevoerbaan.

24.10 'n Kwikskakelaar moet so gemonteer wees dat dit nie uit sy plek kan val of deur die vashegtingsmiddele beskadig kan word nie.

25. TOEVOERVERBINDING EN BUIGSAME BUITEKABELS EN -KOORDE

25.1 'n Toestel moet van een van die volgende verbindingsmiddele na die toevoer voorsien wees:

(a) 'n Stel aansluiters vir blywende verbinding met vaste bedrading;
(b) 'n stel toevoerleidings vir blywende verbinding met vaste bedrading;
(c) 'n toestelinlaat;
(d) 'n nie-afhaalbare kragtoevoerkoord.

'n Toestel mag op hoogstens een van hierdie wyses met die toevoer verbind wees.

25.2 'n Toestel wat bedoel is om blywend met vaste bedrading verbind te wees, moet toelaat dat die toevoerdrade verbind word na dat die toestel op sy steunstuk bevestig is en moet voorsien wees van—

(a) 'n stel aansluiters vir die verbinding van vaste bedradingskabels met die nominale dwarsdeursneeoppervlakte aangegee in kolom 3 van tabel 16 vir die betrokke aangeslane stroom van die toestel of van 'n stel toevoerleidings in 'n geskikte kompartement;
(b) kabelinlate, leipypinlate, uitslagplaatjies of afdigstukke vir die verbinding van die toepaslike tipe(s) kabel of leipyp.

In 'n toestel met 'n aangeslane stroom van hoogstens 16 A, moet die inlate geskik wees vir kabels en leipype met 'n maksimum totale diameter van hoogstens die toepaslike waarde wat in kolom 2 of kolom 3, soos toepaslik, van tabel 12 aangegee word.

TABEL 12—DIAMETER VAN KABELS EN LEIPYPE

1	2	3
Getal geleiers, met inbegrip van aardingsdraad	Maksimum totale diameter, mm	
	Kabel	Leipyp
2	13,0	16,0
3	14,0	16,0
4	14,5	20,0
5	15,5	20,0

25.3 'n Toestel wat nie bedoel is om blywend met vaste bedrading verbind te word nie, moet voorsien wees van—

(a) 'n kragtoevoerkoord, of
(b) behalwe in die geval van 'n druppdigte, spatdigte of waterdigte toestel, 'n toestelinlaat.

25.4 'n Toestelinlaat

(a) moet so geplaas of omhul wees dat geen lewende deel aan toevallige aanraking tydens insteek of uithaal van 'n verbinder blootgestel sal word nie;
(b) so geplaas dat—
  (1) 'n verbinder sonder moeite ingesteek kan word; en
  (2) na insteek van die verbinder, die gewig van die toestel nie eers gedeeltelik deur die verbinder gesteun word wanneer die toestel in enige normale gebruiksposisie op 'n plat oppervlak is nie.

25.5 'n Kragtoevoerkoord moet volgens een van die volgende metodes aan 'n toestel bevestig wees:

(a) 'n Tipe X-bevestiging;
(b) 'n tipe M-bevestiging;
(c) 'n tipe Y-bevestiging; of
(d) indien so gespesifiseer of toegelaat ooreenkomstig die spesifieke vereistes, 'n tipe Z-bevestiging.

25.6 'n Prop mag nie van meer as een kabel of koord voorsien wees nie.

25.7 'n Kragtoevoerkoord—

(a) moet van 'n tipe wees wat aan die vereistes van Bylae 4 van Goewermentskennisgewing R.1615 van 22 Oktober 1965 voldoen;
(b) mag nie van die PVC-geïsoleerde tipe wees nie indien dit gebruik word op 'n toestel met eksterne metaaldele waarvan die temperatuurstyging gedurende die toets in 11.1.1 75 °C oorskry, tensy die ontwerp van die toestel sodanig is dat die kabel of koord tydens normale gebruik nie aan hierdie metaaldele kan raak nie;

24.7 For a glow-discharge lamp with "E10" cap used as an indicator lamp, the series resistor shall be incorporated in the appliance.

24.8 A capacitor shall not be connected between the contacts of a thermal cut-out.

24.9 A motor-operated appliance which in normal use is moved while in operation, shall be fitted with a switch on its supply circuit.

24.10 A mercury switch shall be so mounted that it cannot fall out of position or be damaged by its means of attachment.

25. SUPPLY-CONNECTION AND EXTERNAL FLEXIBLE CABLES AND CORDS

25.1 An appliance shall be provided with one of the following means of connection to the supply:

(a) A set of terminals for permanent connection to fixed wiring;
(b) a set of supply leads for permanent connection to fixed wiring;
(c) an appliance inlet;
(d) a non-detachable power supply cord.

An appliance shall not be provided with more than one means of connection to the supply.

25.2 An appliance intended to be permanently connected to fixed wiring shall allow the connection of the supply wires after the appliance has been fixed to its support, and shall be provided with—

(a) a set of terminals allowing the connection of fixed wiring cable of the nominal cross-sectional area given in Column 3 of Table 16 appropriate to the rated current of the appliance, or with a set of supply leads in a suitable compartment;
(b) cable entries, conduit entries, knock-outs, or glands which allow the connection of the appropriate type(s) of cable or conduit.

In an appliance having a rated current not exceeding 16 A, the entries shall be suitable for cables and conduits with a maximum overall diameter not exceeding the appropriate value given in Column 2 or Column 3, as relevant, of Table 12.

TABLE 12—DIAMETERS OF CABLES AND CONDUITS

1	2	3
Number of conductors including earthing wire	Maximum overall diameter, mm	
	Cable	Conduit
2	13,0	16,0
3	14,0	16,0
4	14,5	20,0
5	15,5	20,0

25.3 An appliance not intended to be permanently connected to fixed wiring shall be provided with—

(a) a power supply cord, or
(b) except in the case of a drip-proof, splashproof, or watertight appliance, an appliance inlet

25.4 An appliance inlet shall be—

(a) so located or enclosed that no live part will be exposed to inadvertent contact during insertion or removal of a connector;
(b) so positioned that—
  (1) a connection can be inserted without difficulty; and
  (2) after insertion of the connector, the weight of the appliance is not supported, even partially, by the connector when the appliance is in any position of normal use on a flat surface.

25.5 A power supply cord shall be assembled to an appliance by one of the following methods:

(a) A Type X attachment;
(b) a Type M attachment;
(c) a Type Y attachment; or
(d) when so specified or allowed in terms of the specific requirements, a Type Z attachment.

25.6 A plug shall not be fitted with more than one cable or cord.

25.7 A power supply cord—

(a) shall be of a type complying with the requirements of Schedule 4 of Government Notice R.1615 of 22 October 1965;
(b) shall not be of the PVC-insulated type if used on an appliance having external metal parts the temperature rise of which, during the test given in 11.1.1, exceeds 75 °C, unless the design of the appliance is such that in normal use the supply cable or cord is not able to touch those metal parts;

University of Fort Hare
Together in Excellence

(c) moet, in die geval van 'n klas I-toestel, 'n groen-en-geel aardingsgeleier hê wat met die binneaardingsaansluiter van die toestel verbind is en, indien dit van 'n prop voorsien is, ook met die aardingskontak van die prop verbind is;

(d) moet geleiers hê met 'n dwarsdeursneeoppervlakte wat minstens gelyk is aan die toepaslike waarde wat in kolom 2 van tabel 13 aangegee word, maar in die geval van 'n toestel met 'n aangeslane stroom van hoogstens 3 A en indien dit spesifiek so in die spesifieke vereistes aangegee word, kan 'n koord wat hoogstens 2 m lank is, geleiers hê met 'n nominale dwarsdeursneeoppervlakte van 0,5 mm².

TABEL 13—DWARSDEURSNEEOPPERVLAKTE VAN GELEIERS

1	2
Aangeslane stroom (I) van toestel, A	Nominale dwarsdeursneeoppervlakte van geleiers, mm²
I ≤ 10	*0,75
10 < I ≤ 13,5	1,0
13,5 < I ≤ 16	1,5
16 < I ≤ 25	2,5
25 < I ≤ 32	4
32 < I ≤ 40	6
40 < I ≤ 63	10

* Kyk *(d)* hierbo.

(e) mag nie aan skerp punte of snyrande van oppervlakke binne of op die toestel blootgestel wees nie.

25.8 In die geval van 'n toestel met 'n tipe Z-bevestiging, mag die saamvorming van die toestelomhulsel en die toevoerkabel of -koord nie die isolasie op die kabel of koord beskadig nie.

25.9 'n Inlaatopening moet so ontwerp en gevorm wees of moet van 'n inlaatbus voorsien wees wat sodanig is dat die bedekking van die kragtoevoerkoord sonder gevaar van beskadiging aangebring kan word. Die isolasie tussen die geleiers en die omhulsel moet, tensy die omhulsel van isoleermateriaal is, bestaan uit minstens die isolasie van die geleier en, in die geval van 'n klas O-, OI- of I-toestel, een bykomende isolasie en in die geval van 'n klas II-toestel, twee bykomende isolasies. Elk van die volgende moet as een bykomende isolasie beskou word:

(a) Die mantel van kragtoevoerkoorde wat gelykstaande is met minstens dié wat in Bylae 4 van Goewermentskennisgewing R.1615 van 22 Oktober 1965 gespesifiseer is;

(b) 'n voering van isoleermateriaal met die eienskappe van aanvullende isolasie;

(c) 'n bus van isoleermateriaal met die eienskappe van aanvullende isolasie in die geval van metaalomhulsels.

25.10 'n Inlaatbus—

(a) moet so gevorm wees dat beskadiging van die koord voorkom word;

(b) moet so bevestig wees dat dit nie gedurende normale gebruik van die toestel verplaas word nie;

(c) mag nie sonder gebruik van gereedskap verwyder kan word nie;

(d) mag, in die geval van tipe X-bevestiging, nie 'n integrerende deel van die koord wees nie; en

(e) mag nie van rubber wees nie, tensy dit 'n bus is wat 'n integrerende deel van 'n koordmantel van natuurlike rubber van 'n tipe M-, Y- of Z-bevestiging in 'n klas O-, OI- en I-toestel is.

25.11 In die geval van 'n toestel wat tydens normale gebruik verskuif word terwyl dit werk, moet 'n koordskerm op 'n kragtoevoerkoord verskaf wees tensy die koordinlaat of -bus van 'n gladde, geronde klokmondopening met 'n rondingradius van minstens 1,5 maal die diameter van 'n koord met die grootste dwarsdeursneeoppervlakte wat met die toestel verbind kan word, voorsien is.

'n Koordskerm—

(a) moet so ontwerp wees dat dit die koord beskerm teen buiging by die inlaatopening, wat gevaar kan veroorsaak;

(b) moet van isoleermateriaal wees;

(c) moet so bevestig wees dat dit nie tydens normale gebruik van die toestel sal verplaas nie;

(d) moet aan die buitekant van die toestel uitsteek oor 'n afstand verby die inlaatopening van minstens 5 maal die totale diameter van die koord wat saam met die toestel geleweer is, waar die totale diameter in die geval van 'n plat koord die groot dwarsdeursneeafmeting van die koord is;

(e) mag, in die geval van 'n tipe X-bevestiging, nie 'n integrerende deel van die koord wees nie;

(f) moet sodanig wees dat, by die toets van die toestel volgens 25.11.1, die kromming van die koord minstens 1,5 maal die totale diameter is, maar in die geval van 'n plat koord, die kleinste totale afmeting is van die koord wat saam met die toestel verkoop is.

(c) shall, in the case of a Class I appliance, have a green-and-yellow earthing conductor connected to the internal earthing terminal of the appliance and, if provided with a plug, also connected to the earthing contact of the plug;

(d) shall have conductors of cross-sectional area at least equal to the appropriate value given in Column 2 of Table 13, except that, in the case of an appliance with a rated current not exceeding 3A and when so specifically stated in the specific requirements, a cord of length not more than 2 m may have conductors of nominal cross-sectional area 0,5 mm².

TABLE 13—CONDUCTOR CROSS-SECTIONAL AREAS

1	2
Rated current (I) of appliance, A	Nominal cross-sectional area, of conductors mm²
I ≤ 10	*0,75
10 < I ≤ 13,5	1,0
13,5 < I ≤ 16	1,5
16 < I ≤ 25	2,5
25 < I ≤ 32	4
32 < I ≤ 40	6
40 < I ≤ 63	10

* See *(d)* above.

(e) shall not be exposed to sharp points or cutting edges of surfaces within, or on the surface of the appliance.

25.8 In the case of an appliance with a Type Z attachment, the moulding together of the appliance enclosure and the supply cable or cord shall not have injured the insulation of the cable or cord.

25.9 An inlet opening shall be so designed and shaped, or shall be provided with an inlet bushing that is such that the covering of the power supply cord can be introduced without risk of damage. The insulation between the conductors and the enclosure shall, unless the enclosure is of insulating material, consist of at least the insulation of the conductor and, in the case of a Class O, OI, or I appliance, one additional insulation and, in the case of a Class II appliance, two additional insulations. Each of the following shall be regarded as one additional insulation:

(a) The sheath of power supply cords equivalent to at least that specified in Schedule 4 of Government Notice R.1615 of 22 October 1965;

(b) a lining of insulating material having the characteristics of supplementary insulation;

(c) a bushing of insulating material having the characteristics of supplementary insulation in the case of metal enclosures.

25.10 An inlet bushing shall—

(a) be so shaped as to prevent damage to the cord;

(b) be so secured that it will not become displaced during normal use of the appliance;

(c) not be removable without the aid of a tool;

(d) for a Type X attachment, not be integral with the cord; and

(e) not be of rubber, unless it is a bushing that is integral with a natural rubber cord-sheath of a Type M, Y, or Z attachment in a Class O, OI, and I appliance.

25.11 In the case of an appliance that in normal use is moved while in operation, a cord guard shall be provided on a power supply cord unless the cord inlet or bushing is provided with a smoothly rounded, bell-mouthed opening having a radius of the roundings of at least 1,5 times the diameter of a cord with the largest cross-sectional area able to be connected to the appliance.

A cord guard shall—

(a) be so designed as to protect the cord against bending at the inlet opening that may cause a hazard;

(b) be of insulating material;

(c) be so secured that it will not become displaced during normal use of the appliance;

(d) project outside the appliance for a distance beyond the inlet opening of at least five times the overall diameter of the cord delivered with the appliance, the overall diameter being, in the case of a flat cord, the major cross-sectional dimension of the cord;

(e) in the case of a Type X attachment, not be integral with the cord;

(f) be such that, when the appliance is tested in accordance with 25.11.1, the curvature of the cord is at least 1,5 times the overall diameter but, in the case of a flat cord, the minor overall dimension, of the cord as sold with the appliance.

25.11.1 *Toets*

(a) *Toetstoestande*

(1) Indien die koordskerm van materiaal is wat gevoelig vir temperatuurveranderings is, voer die toets by 23 ± 2 °C uit.

(2) Buig 'n plat koord in 'n rigting wat haaks is op die vlak waarin die as van die are is.

(b) *Prosedure.* Klem die toestel so vas dat die as van die koordskerm waar die koord dit verlaat, en terwyl die koord vry van spanning is, na bo strek onder 'n hoek van 45° met die horisontaal. Bring dan op die vry ent van die koord 'n massa, in gram, aan wat gelyk is aan $10D^2$, waar D die totale diameter (in millimeter) is, maar in die geval van 'n plat koord, die kleinste totale afmeting (in millimeter) is van die koord wat met die toestel verkoop is, en bepaal kromming van die koord.

25.12 'n Toestel wat voorsien is van 'n kragtoevoerkoord moet oor koordverankering beskik. Dit moet die spanning, met inbegrip van draaiing, op geleiers verlig waar hulle binne die toestel verbind is en moet die isolasie van die geleiers teen skuring beskerm. Die koordverankering moet aan die toepaslike van die volgende vereistes voldoen:

(a) In die geval van 'n tipe X-bevestiging van 'n kragtoevoerkoord mag 'n afdigstuk nie as koordverankering gebruik word in 'n draagbare of handtoestel nie, tensy daar voorsiening gemaak is vir die vasklemming van alle tipes en groottes kabels en koorde wat vir toevoeraansluitings gebruik kan word. In aangevormde produksieontwerpe mag die kabel of koord nie geknoop word of die ente daarvan met tou vasgebind of soortgelyke metodes gebruik word om koordverankering te bewerkstellig nie, metodes soos labirinte is toelaatbaar.

(b) In die geval van 'n tipe X-bevestiging van kragtoevoerkoorde, moet die koordverankerings so ontwerp of geplaas of albei wees dat—

(1) vervanging van die koord sonder moeite kan geskied;

(2) dit duidelik is hoe spanningsverligting verkry moet word;

(3) tensy die toestel so ontwerp is dat slegs een tipe koord aangebring kan word, die koordverankering doeltreffend is vir alle tipes en groottes koorde wat moontlik verbind moet word;

(4) die koord moet nie aan klemskroewe van die koordverankering kan raak nie indien hierdie skroewe bereikbaar is of elektries verbind is met 'n bereikbare metaaldeel;

(5) die koord nie met 'n metaalskroef wat regstreeks op die koord druk, vasgeklem word nie;

(6) minstens een deel van die koordverankering stewig aan die toestel bevestig is;

(7) skroewe, indien daar is, waarmee gewerk moet word wanneer 'n koord vervang word, nie gebruik word om enige ander komponent mee te bevestig nie tensy, indien dit weggelaat of verkeerd gemonteer word, die toestel daardeur buite aksie gestel word of dit duidelik is dat die toestel onvolledig is of tensy die dele wat bedoel is om daarmee vasgemaak te word, nie losgemaak hoef te word tydens die vervanging van die koord nie.

(c) In die geval van 'n tipe X-bevestiging op—

(1) 'n klas O-, OI- of I-toestel, indien 'n isolasiefout in die koord bereikbare dele lewendig kan maak, moet die koordverankering van isoleermateriaal wees of moet dit van 'n isoleervoering voorsien word;

(2) 'n klas II-toestel, moet die koordverankering van isoleermateriaal wees of, indien dit van metaal is, moet die koord van bereikbare metaaldele geïsoleer word deur isolering wat aan die vereistes vir aanvullende isolasie voldoen.

(d) In die geval van tipe M-, Y- of Z-bevestiging, moet die afsonderlike geleiers van bereikbare metaaldele geïsoleer wees deur isolasie wat aan die vereistes vir basiese isolasie in die geval van klas O-, OI- of I-toestelle en aanvullende isolasie in die geval van klas II-toestelle voldoen. Hierdie isolasie kan bestaan uit—

(1) 'n afsonderlike isoleerversperring wat aan die koordverankering bevestig is;

(2) 'n spesiale voering wat aan die koord bevestig is; of

(3) in die geval van 'n klas O-, OI- of I-toestel, die mantel van 'n bemantelde kabel of koord.

(e) In die geval van 'n tipe M- of Y-bevestiging, moet die koordverankering so ontwerp of geplaas of albei wees dat—

(1) die vervanging daarvan nie aan die veiligheid en bedoelde funksie van die toestel afbreuk doen nie;

(2) die kabel of koord nie aan die klemskroewe van die koordverankering kan raak as hierdie skroewe bereikbaar is of elektries met 'n bereikbare metaaldeel verbind is nie;

(3) die koord nie deur 'n metaalskroef wat regstreeks op die koord druk, vasgeklem is nie;

(4) daar geen knoop in die koord is nie tensy dit spesifiek volgens die spesifieke vereistes toegelaat word;

(5) indien 'n ontwerp soos 'n labirint gebruik word, die wyse waarop die kragtoevoerkoord verbind moet word, duidelik is;

25.11.1 *Test*

(a) *Test conditions*

(1) If the cord guard is of a material sensitive to temperature changes, carry out the test at 23 ± 2 °C.

(2) Bend a flat cord in a direction perpendicular to the plane containing the axes of the cores.

(b) *Procedure.* Clamp the appliance so that the axis of the cord guard where the cord leaves it, and with the cord free from stress, projects upwards at an angle of 45 °C to the horizontal. Then attach to the free end of the cord a mass, in grams, equal to $10D^2$, D being the overall diameter in millimetres, but in the case of a flat cord, the minor overall dimension, in millimetres, of the cord as sold with the appliance, and determine the curvature of the cord.

25.12 An appliance fitted with a power supply cord shall have a cord anchorage. It shall relieve the conductors from strain, including twisting, where they are connected within the appliance, and shall protect the insulation of the conductors from abrasion. A cord anchorage shall comply with the appropriate of the following requirements:

(a) In the case of a Type X attachment of a power supply cord, a gland shall not be used as a cord anchorage in a portable or hand-held appliance unless it has provision for clamping all types and sizes of cables and cords which might be used for supply connections. In production moulded-on designs, tying the cable or cord into a knot, or whipping its ends with string, or similar methods shall not be used to effect a cord anchorage; but methods such as labyrinths shall be permissible.

(b) For a Type X attachment of power supply cords, cord anchorages shall be so designed, or located, or both, that—

(1) replacement of the cord is possible without difficulty;

(2) it is clear as to how the relief from strain is to be obtained;

(3) unless the appliance is so designed that only one type of cord can be fitted, the cord anchorage functions efficiently on all the different types and sizes of cords which may be connected;

(4) the cord cannot touch clamping screws of the cord anchorage if these screws are accessible or are electrically connected to an accessible metal part;

(5) the cord is not clamped by a metal screw which bears directly on the cord;

(6) at least one part of the cord anchorage is securely fixed to the appliance;

(7) screws, if any, that have to be operated when replacing a cord, do not serve to fix any other component unless, when omitted or incorrectly mounted, they render the appliance inoperative or it is evident that the appliance is incompletely assembled, or unless the parts which are intended to be fastened by them are not required to be detached during the replacement of the cord.

(c) In the case of a Type X attachment on—

(1) A Class O, OI, or I appliance, if an insulation fault on the cord make accessible parts live, the cord anchorage shall be of an insulating material or shall be provided with an insulating lining;

(2) a Class II appliance, the cord anchorage shall be of an insulating material, or, if of metal, the cord shall be insulated from accessible metal parts by insulation complying with the requirements for supplementary insulation.

(d) For a Type M, Y, or Z attachment, the individual conductors shall be insulated from accessible metal parts by insulation complying with the requirements for basic insulation in the cases of Class O, OI, and I, and supplementary insulation in the case of Class II appliances. This insulation may consist of—

(1) a separate insulating barrier fixed to the cord anchorage;

(2) a special lining fixed to the cord, or

(3) in the case of Class O, OI, or I appliance, the sheath of a sheathed cable or cord.

(e) For a Type M or Y attachment, a cord anchorage shall be so designed or located or both, that—

(1) its replacement does not impair the safety and intended function of the appliance;

(2) the cable or cord cannot touch clamping screws of the cord anchorage if these screws are accessible or are electrically connected to an accessible metal part;

(3) the cord is not clamped by a metal screw which bears directly on the cord;

(4) there is no knot in the cord unless specifically permitted in terms of the specific requirements;

(5) if a design such as a labyrinth is used, the way in which the power supply cord is to be assembled shall be clear;

University of Fort Hare
Together in Excellence

(6) in die geval van 'n tipe M-bevestiging, dit duidelik is hoe spanningsverligting verkry moet word en hoe draaiing voorkom moet word.

(f) Dit mag nie moontlik wees om die koord so diep in 'n toestel te druk dat die koord of binnedele van die toestel beskadig kan word nie, en by die toets van die koordverankering volgens 25.12.1,

(1) mag die koord nie tydens die toets beskadig word nie;

(2) mag die koord na die toets nie oorlangs met meer as 2 mm verskuif het nie en mag die geleiers nie oor 'n afstand van meer as 1 mm in die aansluiters beweeg het nie en mag daar geen sigbare spanning by die verbinding wees nie; en

(3) mag die kruipafstande en vry ruimtes nie tot onder die toepaslike waardes in tabel 22 verminder het nie.

25.12.1 *Toets*

(a) Toetstoestande

(1) Bring op 'n toestel wat vir tipe X-koordbevestiging ontwerp is, 'n kragtoevoerkoord aan wat aan die vereistes van 25.7 voldoen, deur die geleiers in die aansluiters te steek en die aansluitskroewe, indien daar is, net styf genoeg vas te draai om te verhoed dat die geleiers hul posisie verander. Bevestig die koordverankering deur die klemskroewe met twee derdes van die toepaslike wringkrag gespesifiseer in 28.1.1 vas te draai. Tensy die toestel so ontwerp is dat slegs een tipe koord aangebring kan word, voer die toetse eerste uit met die ligste toelaatbare tipe koord met geleiers van die kleinste toepaslike dwarsdeursneeoppervlakte wat in tabel 16 aangegee word en dan met 'n koord wat geleiers het van die grootste toepaslike dwarsdeursneeoppervlakte wat in die tabel aangegee word en van die swaarste tipe is wat in die koordverankering pas.

(2) Toets 'n toestel met 'n tipe M-, Y- of Z-koordbevestiging terwyl die koord in die posisie is waarin dit verkoop is.

(3) Voordat daar met die toets begin word en met die koord onder die toepaslike spanning in kolom 2 van tabel 14 aangegee, maak 'n merk op die koord ongeveer 20 mm van die koordverankering af en hef dan die spanning op.

(b) Prosedure. Onderwerp die koord aan 25 een-sekonde-aanwendings van 'n spanning van die toepaslike waarde aangegee in kolom 2 van tabel 14, sonder om te ruk, in die rigting wat die grootste spanning daarop plaas. Onderwerp die koord onmiddellik daarna 1 min. lank aan 'n wringkrag van die toepaslike waarde aangegee in kolom 3 van tabel 14 en meet die oorlangse verplasing van die merk op die koord met betrekking tot die verwysingspunt. Ondersoek die koord vir voldoening aan die vereistes van 25.12 *(f)* (1) en 25.12 *(f)* (2) en gaan dan na of die koordafstande en vry ruimtes aan die vereistes van 25.12 *(f)* (3) voldoen.

TABEL 14—SPANNINGS- EN WRINGKRAGWAARDES

1	2	3
Massa van toestel (M), kg	Spanning, N	Wringkrag N.m
M ≤ 1	30	0,1
1 < M ≤ 4	60	0,25
4 < M	100	0,35

25.13 Ruimte wat verskaf word vir toevoerbedrading binnekant of as deel van 'n toestel vir verbinding met—

(a) vaste bedrading en vir 'n tipe X-, M- of Y-bevestiging, moet so ontwerp wees—

(1) dat daar, voordat die dekstuk (indien daar is) aangebring word, nagegaan kan word of die geleiers reg verbind en geplaas is;

(2) dat dekstukke, indien daar is, aangebring kan word sonder dat daar enige risiko is dat die toevoerverbinders of hul isolasie beskadig kan word; en

(3) dat, in die geval van 'n draagbare toestel, uitgesonderd 'n toestel met 'n tipe M- of Y-bevestiging en 'n koord wat afsluitings het wat nie van die geleiers kan afgly nie, indien die ongeïsoleerde ent van 'n geleier losraak van die aansluiter, dit nie met bereikbare metaal kontak kan maak nie;

(b) vaste bedrading en vir 'n tipe X-bevestiging, afgesien daarvan dat dit aan *(a)* hierbo moet voldoen,

(1) moet groot genoeg wees sodat die geleiers ingesteek kan word en sonder moeite verbind kan word;

(2) moet so ontwerp wees dat enige dekstuk(ke) wat toegang tot aansluiters vir buitegeleiers verskaf, sonder die gebruik van doelgemaakte gereedskap verwyder kan word; en

(c) toevoerleidings moet sodanig wees dat die volume wat vir elke toevoerleiding en aardingsleiding binne die kompartement beskikbaar is, nie minder is as die toepaslike volume wat in kolom 2 van tabel 15 gespesifiseer word nie.

(6) in the case of a Type M attachment, it is clear how the relief from strain and the prevention of twisting is achieved.

(f) It shall not be possible to push the cord into an appliance to such an extent that the cord or internal parts of the appliance could be damaged, and when the cord anchorage is tested in accordance with 25.12.1,

(1) the cord shall not be damaged during the test;

(2) the cord shall, after the test, not have been longitudinally displaced by more than 2 mm and the conductors shall not have moved a distance of more than 1 mm in the terminals, and there shall be no visible strain at the connection; and—

(3) creepage and clearance distances shall not be reduced to below the relevant values given in Table 22.

25.12.1 *Test*

(a) Test conditions

(1) To an appliance designed for Type X attachment of cord, fit a power supply cord that complies with the requirements of 25.7, by introducing the conductors into the terminals and tightening the terminal screws, if any, just sufficiently to prevent the conductors from changing their position. Fasten the cord anchorage, tightening clamping screws with two-thirds of the appropriate torque specified in 28.1.1. Unless the appliance is so designed that only one type of cord can be fitted, conduct the tests first with the lightest permissible type of cord that has conductors of the smallest appropriate cross-sectional area given in Table 16, and then with a cord that has conductors of the largest appropriate cross-sectional area given in that table and is of the heaviest type that can be accommodated in the cord anchorage.

(2) Test an appliance that has a Type M, Y, or Z attachment of cord with the cord in position as sold.

(3) Before starting the test, with the cord under the appropriate tension shown in Column 2 of Table 14, make a mark on the cord approximately 20 mm from the cord anchorage and then release the tension.

(b) Procedure. Subject the cord to 25 one-second applications of a tension of the appropriate value given in Column 2 of Table 14 and applied, without jerking, in the direction that imposes the greatest strain. Immediately afterwards, subject the cord for 1 min to a torque of the appropriate value given in Column 3 of Table 14, and then measure the longitudinal displacement of the mark on the cord in relation to the reference point. Inspect the cord for compliance with the requirements of 25.12 *(f)* (1) and 25.12 *(f)* (2) and then verify that creepage distances and clearances comply with the requirements of 25.12 *(f)* (3).

TABLE 14—TENSION AND TORQUE VALUES

1	2	3
Mass of appliance (M), kg	Tension N	Torque, N.m
M ≤ 1	30	0,1
1 < M ≤ 4	60	0,25
4 < M	100	0,35

25.13 Space provided for supply wiring inside, or as a part of, an appliance for the connection to—

(a) fixed wiring and for a Type X, M, or Y attachment, shall be so designed—

(1) as to permit checking, before fitting the cover (if any), that the conductors are correctly connected and positioned;

(2) that covers, if any, can be fitted without risk of damage to the supply connectors or their insulation; and

(3) that, in the case of a portable appliance other than an appliance that has a Type M or Y attachment and a cord that has terminations that cannot slip off the conductors, if the uninsulated end of a conductor were to part from the terminal, it cannot come into contact with accessible metal;

(b) fixed wiring and for a Type X attachment, in addition to complying with *(a)* above,

(1) shall be large enough to allow the conductors to be introduced and connected without difficulty;

(2) shall be so designed as to permit removal, without the use of a special purpose tool, of any cover(s) that give access to terminals for external conductors; and

(c) supply leads shall be such that the volume available for each supply lead and earthing lead within the compartment is not less than the appropriate volume specified in Column 2 of Table 15.

TABEL 15—KOMPARTEMENTVOLUMES

1	2
Nominale dwarsdeursneeoppervlakte van geleier (W), mm^2	Volume vereis vir elke toevoer- en aardingsleiding, cm^3
— W ≤ 2	33
2 < W ≤ 4	37
4 < W ≤ 6	41
6 < W ≤ 10	49

25.14 Afhaalbare en nie-afhaalbare tussenverbindingskabels en -koorde moet aan die vereistes vir 'n toevoerkabel of -koord aangebring op 'n toestel voldoen, met die volgende uitsonderings:

(a) Die toestelverbinder en -inlaat vir 'n buigsame tussenverbindingskabel of -koord mag nie omruilbaar wees met die toevoerkabel- en -koordtoestelverbinder en -inlaat nie indien daar aan voldoening aan hierdie spesifikasie afbreuk gedoen kan word deur sodanige omruiling;

(b) die dwarsdeursneeoppervlakte van die geleiers in 'n buigsame tussenverbindingskabel of -koord moet bepaal word op die basis van die maksimum stroom wat die geleiers gedurende die toets in 11.1.1 dra en nie deur die aangeslane stroom van die volledige toestel nie;

(c) die isolasiedikte vir die afsonderlike are kan verminder word indien die spanning van die baan waarmee die besondere geleier verbind is, ekstra lae veiligheidspanning is en die toestel nog in staat is om die toets vir elektriese sterkte van 16.1.3 te deurstaan.

25.15 Die verbindingsinrigtings op 'n afhaalbare tussenverbinding tussen verskillende komponente van 'n toestel mag nie sodanig wees dat bereikbare metaaldeel (-dele) lewendig kan word as een van die verbindingsinrigtings ontkoppel is nie.

26. AANSLUITERS VIR EN VERBINDING VAN BUITEGELEIERS

26.1 'n Toestel, uitgesonderd 'n toestel met toevoerleidings of met 'n tipe Y- of Z-bevestiging, moet van aansluiters voorsien wees waarin die verbinding met skroewe, moere of ander aanneemlik doeltreffende inrigtings bewerkstellig word.

Skroewe en moere wat buitegeleiers vasklem, moet 'n metrieke draad hê of 'n draad waarvan die steek en meganiese sterkte daarmee ooreenstem. Sodanige skroewe en moere mag nie help om enige ander komponent te bevestig nie, hoewel hulle ook binnegeleiers kan vasklem indien die geleiers so gerangskik is dat hulle nie tydens verbinding van die toevoergeleiers verplaas sal word nie.

In 'n toestel met 'n tipe Y- of Z-bevestiging, kan gesoldeerde, gesweiste, gekrimpte en soortgelyke verbindings gebruik word vir die verbinding van buitegeleiers mits—

(a) die geleier so geplaas of bevestig is dat daar nie net op die soldering, krimping of sweising staatgemaak word om die geleier in posisie te hou nie; of

(b) versperrings voorsien word wat verseker dat indien 'n geleier by 'n gesoldeerde of gesweiste las breek of uit 'n krimpverbinding gly, die kruipafstande en vry ruimtes tussen lewendige dele en ander metaaldele nie tot minder as 50% van die toepaslike waardes in tabel 22 verminder kan word nie.

26.2 Aansluiters vir die verbinding van vaste bedrading en dié vir tipe X-bevestiging moet verbinding van geleiers met nominale dwarsdeursneeoppervlaktes binne die toepaslike bestek in kolom 2 of kolom 3, soos toepaslik, van Tabel 16 toelaat.

TABEL 16—DWARSDEURSNEEOPPERVLAKTE VAN GELEIERS VAN KABELS EN KOORDE

1	2	3
Aangeslane stroom (I) van toestel, A	Nominale dwarsdeursneeoppervlakte van geleiers, mm^2	
	Buigsame kabels en koorde	Kabels vir vaste bedrading
I ≤ 3	0,05- 0,75	1 - 2,5
3 < I ≤ 10	0,75- 1,5	1 - 2,5
10 < I ≤ 13,5	1 - 1,5	1,5- 4
13,5 < I ≤ 16	1,5 - 2,5	1,5- 4
16 < I ≤ 25	2,5 - 4	2,5- 6
25 < I ≤ 32	4 - 6	4 -10
32 < I ≤ 40	6 -10	6 -16
40 < I ≤ 63	10 -16	10 -25

TABLE 15—COMPARTMENT VOLUMES

1	2
Nominal cross-sectional area of conductor (W) mm^2	Volume required for each supply and earthing lead, cm^3
— W ≤ 2	33
2 < W ≤ 4	37
4 < W ≤ 6	41
6 < W ≤ 10	49

25.14 Detachable and non-detachable interconnecting cables and cords shall comply with the requirements for a supply cable or cord fitted to the appliance with the following exceptions:

(a) The appliance coupler and inlet provided for an interconnecting flexible cable or cord shall not be interchangeable with the supply cable and cord appliance coupler and inlet if compliance with this specification could be impaired by such an exchange;

(b) the cross-sectional area of the conductors in an interconnecting flexible cable or cord shall be determined on the basis of the maximum current carried by the conductors during the test given in 11.1.1 and not by the rated current of the complete appliance;

(c) the insulation thickness for the individual cores may be decreased if the voltage of the circuit to which the particular conductor is connected, is safety extra-low voltage and the appliance is still able to withstand the electric strength test given in 16.1.3.

25.15 The connecting devices on a detachable intermediate connection between different components of an appliance shall not be such that accessible metal part(s) become live when one of the connecting devices is disconnected.

26. TERMINALS FOR, AND CONNECTION OF EXTERNAL CONDUCTORS

26.1 An appliance, other than an appliance provided with supply leads or having a Type Y or Z attachment shall be provided with terminals in which connection is made by means of screws, nuts, or other acceptably effective devices.

Screws and nuts that clamp external conductors shall have a metric thread, or a thread comparable to it in pitch and mechanical strength. Such screws and nuts shall not serve to secure any other component, except that they may also clamp internal conductors if these are so arranged that they will not be displaced during connection of the supply conductors.

In an appliance with a Type Y or Z attachment, soldered, welded, crimped, and similar connections may be used for the connection of external conductors, provided that—

(a) the conductor is so positioned or fixed that reliance is not placed on the soldering, crimping, or welding alone to maintain the conductor in position; or

(b) barriers are provided that ensure that, in the event of a conductor breaking away at a soldered or welded joint or slipping out of a crimped connection, creepage distances and clearances between live parts and other metal parts cannot be reduced to less than 50% of the relevant values given in Table 22.

26.2 Terminals for the connection of fixed wiring and those for a Type X attachment shall allow the connection of conductors of nominal cross-sectional areas in the appropriate range given in Column 2 or Column 3, as relevant, of Table 16.

TABLE 16—CROSS-SECTIONAL AREAS OF CONDUCTORS OF CABLES AND CORDS

1	2	3
Rated current (I) of appliance, A	Nominal cross-sectional area of conductors, mm^2	
	Flexible cables and cords	Cables for fixed wiring
I ≤ 3	0,05- 0,75	1 - 2,5
3 < I ≤ 10	0,75- 1,5	1 - 2,5
10 < I ≤ 13,5	1 - 1,5	1,5- 4
13,5 < I ≤ 16	1,5 - 2,5	1,5- 4
16 < I ≤ 25	2,5 - 4	2,5- 6
25 < I ≤ 32	4 - 6	4 -10
32 < I ≤ 40	6 -10	6 -16
40 < I ≤ 63	10 -16	10 -25

26.3 Aansluiters vir tipe M-, Y- of Z-bevestiging moet sonder beskadiging of verplasing 'n spanning van 5 N op die verbinding deurstaan en die aansluiters moet daarna nog aan die vereistes van 11.1 voldoen.

26.4 In 'n toestel wat nie van toevoerleidings of tipe Y- of Z-bevestiging voorsien is nie, moet die aansluiters so bevestig wees dat, by die toets daarvan volgens 26.4.1,

(a) 'n aansluiter nie losraak nie;
(b) die binnebedrading nie aan spanning onderwerp word nie;
(c) die kruipafstande en vry ruimtes nie tot onder die toepaslike waardes in tabel 22 verminder word nie; en
(d) die aansluiter na afloop van die toets aan die vereistes van 26.5 en 26.6 voldoen.

26.4.1 *Toets.* Maak 'n geleier van die grootste toepaslike dwarsdeursneeoppervlakte in kolom 2 of kolom 3, soos toepaslik, van tabel 16 10 maal vas en los deur 'n wringkrag gelyk aan twee derdes van die wringkrag gespesifiseer in 28.1.1 aan te wend. Ondersoek die geleier en aansluiters en gaan dit na vir voldoening aan die vereistes van 26.4.

26.5 Die ontwerp van die aansluiters in 'n toestel wat nie van toevoerleidings of tipe Y- of Z-bevestiging voorsien is nie, moet sodanig wees dat hulle die geleier tussen metaaloppervlakke vasklem met 'n kontakdruk wat die toepaslike asspanning gespesifiseer in 26.10.1 kan deurstaan sonder om diep of skerp kepe op die geleier te veroorsaak.

26.6 Die aansluiters van 'n toestel wat nie van toevoerleidings of tipe Y- of Z-bevestiging voorsien is nie,

(a) mag nie, ten einde die regte verbinding te bewerkstellig, spesiale voorbereiding van die geleier vereis nie, d.w.s. soldering van die stringe, gebruik van kabelore en die maak van ogies, maar die herfatsoenering van die geleier voordat dit in die aansluiter gesteek word of die draaiing van 'n stringgeleier om die ent te konsolideer, word toegelaat; en
(b) moet so ontwerp of geplaas wees dat die geleier nie kan uitgly as die klemskroewe of -moere vasgedraai word nie.

26.7 Die afmetings van 'n aansluiter van die pilaartipe moet met die toepaslike waardes in tabel 17 ooreenstem, maar die lengte van die skroefdraad in die pilaar kan verminder word mits, benewens voldoening aan die vereistes van 26.10, minstens twee volle skroefdrade ingeskroef is wanneer 'n geleier van die kleinste toepaslike dwarsdeursneeoppervlakte aangegee in tabel 16 met genoeg druk vasgeklem word om die toepaslike asspanning in tabel 20 te deurstaan.

26.3 Terminals for a Type M, , or Z attachment shall withstand without damage or displacement, a tension on the connection of 5 N and the terminals shall, afterwards, still comply with the requirements of 11.1.

26.4 In an appliance not provided with supply leads or a Type Y or Z attachment, terminals shall be so fixed that, when tested in accordance with 26 4.1,

(a) a terminal does not work loose;
(b) internal wiring is not subjected to stress;
(c) creepage distances and clearances are not reduced to below the relevant values given in Table 22; and
(d) at the end of the test, a terminal complies with the requirements of 26.5 and 26.6.

26.4.1 *Test.* Fasten and loosen 10 times a conductor of the largest appropriate cross-sectional area given in Column 2 or Column 3, as relevant, of Table 16, applying a torque equal to two-thirds of the torque specified in 28.1.1, and examine and check the conductor and terminals for compliance with the requirements of 26.4.

26.5 The design of the terminals in an appliance not provided with supply leads or a Type Y or Z attachment shall be such that they clamp the conductor between metal surfaces with a contact pressure able to withstand the appropriate axial tension specified in 26.10.1 without causing deep or sharp indentations on the conductor.

26.6 The terminals of an appliance not provided with supply leads or a Type Y or Z attachment.

(a) shall not, in order to effect correct connection, require special preparation of the conductor, i.e. soldering of the strands, use of cable lugs, and formation of eyelets, but the reshaping of the conductor before its introduction into the terminal, or the twisting of a stranded conductor to consolidate the end is permissible; and
(b) shall be so designed or placed that the conductor cannot slip out when the clamping screws or nuts are tightened.

26.7 The dimensions of a terminal of the pillar type shall conform to the appropriate values given in Table 17, except that the length of the thread in the pillar may be reduced provided that, in addition to complying with the requirements of 26.10, at least two full threads are in engagement when a conductor of the smallest appropriate cross-sectional area given in Table 16 is clamped with sufficient pressure to withstand the relevant axial tension given in Table 20.

University of Fort Hare

TABEL 17—AFMETINGS VAN PILAARTIPE AANSLUITERS

1	2	3	4	5
Aangeslane stroom (I) van toestel, A	Nominale draad-diameter, mm, min.	Diameter van gat vir geleier, mm, min.	Lengte van draad in pilaar, mm, min.*	Verskil tussen gatdiameter en nominale draaddiameter, mm, maks.
I ≤ 10	3,0*	3,0	2,0	0,6
10 < I ≤ 16	3,5	3,5	2,5	0,6
16 < I ≤ 25	4,0	4,0	3,0	0,6
25 < I ≤ 32	4,0	4,5	3,0	1,0
32 < I ≤ 40	5,0	5,5	4,0	1,3
40 < I ≤ 63	6,0	7,0	4,0	1,5

* Gemeet op die plek waar die draad die eerste maal gebreek word deur die gat vir die geleier.

TABLE 17—DIMENSIONS OF PILLAR-TYPE TERMINALS

1	2	3	4	5
Rated current (I) of appliance, A	Nominal thread diameter, mm, min.	Diameter of hole for conductor, mm, min.	Length of thread in pillar, mm, min.*	Difference between diameter of hole and nominal thread diameter, mm, max.
I ≤ 10	3,0*	3,0	2,0	0,6
10 < I ≤ 16	3,5	3,5	2,5	0,6
16 < I ≤ 25	4,0	4,0	3,0	0,6
25 < I ≤ 32	4,0	4,5	3,0	1,0
32 < I ≤ 40	5,0	5,5	4,0	1,3
40 < I ≤ 63	6,0	7,0	4,0	1,5

* Measured to the point where the thread is first broken by the hole for the conductor.

Die lengte van die skroefdraaddeel van die aansluitskroef mag nie minder wees as die som van die gatdiameter vir die geleier en die lengte van die skroefdraad in die pilaar nie.

Die oppervlak waarteen die geleier vasgeklem word, moet vry van skerp duike en uitsteeksels wees.

Aansluiters moet so ontwerp en geplaas wees dat die ent van 'n geleier wat in die gat gesteek word, verby die skroefdraadgesnyde gat steek oor 'n afstand wat minstens gelyk is aan die helfte van die nominale diameter van die skroefdraad of 2,5 mm, watter ook al die grootste is.

Indien die skroefdraad in die pilaar ingelaat is, moet die lengte van 'n kopskroef dienooreenkomstig verleng word.

Die deel waarteen die geleier vasgeklem is, hoef nie noodwendig 'n integrerende deel van die deel met die klemskroef te wees nie.

26.8 Die afmetings van 'n skroeftipe aansluiter mag nie minder wees as die toepaslike minimum waardes wat in tabel 18 aangegee word nie, maar—

(a) die lengte van die skroefdraad in die skroefgat of -moer en die lengte van die draad op die skroef kan verminder word, mits, benewens voldoening aan die vereistes van 26.10, minstens twee voile skroefdrade ingeskroef is as 'n geleier van die grootste toepaslike dwarsdeursneeoppervlakte aangegee in tabel 16 met genoeg druk vasgeklem is om die toepaslike asspanning in tabel 20 te deurstaan; en

(b) indien 'n tussendeel, soos 'n drukplaat wat tussen die kop van die skroef en die geleier gebruik word, meer as een skroef het, kan skroewe met die volgende nominale draaddiameter gebruik word:

(1) 3,5 mm vir 'n aangeslane stroom van hoogstens 25 A; en
(2) 4,0 mm vir 'n aangeslane stroom bo 25 A.

Indien die vereiste skroefdraadlengte in 'n aansluiterskroefgat deur insnyding verkry word, moet die rand van die ekstrusie plat wees en moet die lengte van die skroefdraad die gespesifiseerde minimum waarde met minstens 0,5 mm oorskry. Die lengte van die ekstrusie mag nie 80% van die oorspronklike dikte van die metaal oorskry nie.

Indien 'n tussendeel soos in *(b)* hierbo gebruik word, moet die lengte van die skroefdraad op die skroef dienooreenkomstig verhoog word en kan die toepaslike nominale verskil gespesifiseer in kolom 5 van tabel 18 verminder word met—

1 mm vir 'n aangeslane stroom van hoogstens 16 A, en
2 mm vir 'n aangeslane stroom bo 16 A.

The length of the threaded part of the terminal screw shall be not less than the sum of the diameter of the hole for the conductor and the length of the thread in the pillar.

The surface against which the conductor is clamped shall be free from sharp indentations and projections.

Terminals shall be so designed and located that the end of a conductor introduced into the hole can pass beyond the threaded hole for a distance at least equal to half the nominal diameter of the screw thread or 2,5 mm, whichever is the greater.

If the thread in the pillar is recessed, the length of a headed screw shall be increased accordingly.

The part against which the conductor is clamped need not necessarily be integral with the part carrying the clamping screw.

26.8 The dimensions of a screw-type terminal shall be not less than the appropriate minima given in Table 18, except that- -

(a) the length of the thread in the screw hole or nut and the length of thread on the screw may be reduced, provided that, in addition to complying with the requirements of 26.10, at least two full threads are in engagement when a conductor of the largest appropriate cross-sectional area given in Table 16 is clamped with sufficient pressure to withstand the relevant axial tension given in Table 20; and

(b) if an intermediate part, such as a pressure plate used between the head of the screw and the conductor, has more than one screw, screws of the following nominal thread diameter may be used:

(1) 3,5 mm for rated currents not exceeding 25 A; and
(2) 4,0 mm for rated currents exceeding 25 A.

If the required length of thread in a terminal screw hole is obtained by plunging, the edge of the extrusion shall be smooth and the length of thread shall exceed the specified minimum value by at least 0,5 mm. The length of the extrusion shall not exceed 80% of the original thickness of the metal.

If an intermediate part is used as in *(b)* above, the length of thread on the screw shall be increased accordingly, and the appropriate nominal difference specified in Column 5 of Table 18 may be reduced by—

1 mm for rated currents not exceeding 16 A, and
2 mm for rated currents exceeding 16 A.

University of Fort Hare
Together in Excellence

TABEL 18—AFMETINGS VAN SKROEFTIPE AANSLUITERS

1	2	3	4	5	6
Aangeslane stroom (I) van toestel, A	Nominale skroefdraaddiameter, mm, min.*	Lengte van skroefdraad op skroef, mm, min.	Lengte van skroefdraad in skroefgat of -moer, mm, min.	Nominale verskil tussen die diameter van die kop en skag van skroef, mm*	Hoogte van kop van skroef, mm, mn.
I ≤ 10	3,5(3,0)†	4,0(3,5)†	1,5	3,5(3,0)†	2,0(1,8)†
10 < I ≤ 16	4,0	5,5	2,5	4,0	2,4
16 < I ≤ 25	5,0	6,5	3,0	5,0	3,0
25 < I ≤ 32	5,0	7,5	3,0	5,0	3,5
32 < I ≤ 40	5,0	8,5	3,0	5,0	3,5
40 < I ≤ 63	6,0	10,5	3,5	6,0	5,0

* Behoudens 'n minustoleransie van 0,15 mm.
† Die waarde tussen hakies geld slegs vir aansluiters in draagbare toestelle.

TABLE 18—DIMENSIONS OF SCREW TYPE TERMINALS

1	2	3	4	5	6
Rated current (I) of appliance, A	Nominal thread diameter, mm, min.*	Length of thread on screw, mm, min.	Lenght of thread in screw hole or nut, mm, min.	Nominal difference between diameters of head and shank of screw, mm*	Height of head of screw, mm, min.
I ≤ 10	3,5 (3,0)†	4,0 (3,5)†	1,5	3,5 (3,0)†	2,0 (1,8)†
10 < I ≤ 16	4,0	5,5	2,5	4,0	2,4
16 < I ≤ 25	5,0	6,5	3,0	5,0	3,0
25 < I ≤ 32	5,0	7,5	3,0	5,0	3,5
32 < I ≤ 40	5,0	8,5	3,0	5,0	3,5
40 < I ≤ 63	6,0	10,5	3,5	6,0	5,0

* Subject to a minus tolerance of 0,15 mm.
† The values in brackets apply to terminals in portable appliances only.

Indien die skroefdraad in die skroefgat of -moer ingelaat is, kan die lengte van kopskroewe dienooreenkomstig verleng word.

26.9 'n Pentipe aansluiter moet van 'n waster voorsien wees en die afmetings daarvan moet met die toepaslike waardes in tabel 19 ooreenstem.

TABEL 19—AFMETINGS VAN PENTIPE AANSLUITERS

1	2	3	4
Aangeslane stroom (I) van toestel, A	Nominale skroefdraad-diameter, mm, min.	Verskil tussen skroefdraad-diameter en	
		binnediameter van wasters, mm, maks.	buitediameter van wasters, mm, min.
I ≤ 10	3,0	0,4	4,0
10 < I ≤ 16	3,5	0,4	4,5
16 < I ≤ 25	4,0	0,5	5,0
25 < I ≤ 32	4,0	0,5	5,5

26.10 Indien die skroefdraadlengte in die pilaar, skroefgat of -moer of die skroefdraadlengte op die skroef korter is as die toepaslike waarde aangegee in tabel 17 of 18, soos toepaslik, of indien die lengte van die ekstrusie op 'n skroeftipe aansluiter 80% van die oorspronklike dikte van die metaal oorskry, moet die aansluiter sodanig wees dat, by die toets daarvan volgens 26.10.1, die geleier gedurende die toets nie sigbaar beweeg in die aansluiter nie en dat die aansluiter na afloop van die toets geen teken van skade toon wat aan verdere gebruik daarvan afbreuk doen nie.

26.10.1 *Toets*. Toets die aansluiter volgens 28.1.1, maar verhoog die wringkrag tot 1,2 maal die toepaslike waarde wat in tabel 21 aangegee word. Bevestig 'n geleier dan soos in 26.4.1 in die aansluiter en onderwerp die aansluiter terwyl dit vasgeklem is, 1 min lank aan 'n asspanning, wat sonder rukbeweging aangewend word, van die toepaslike waarde wat in tabel 20 aangegee word.

TABEL 20—ASSPANNING

1	2
Aangeslane stroom (I) van toestel, A	Spanning, N
I ≤ 6	40
6 < I ≤ 16	50
16 < I ≤ 25	60
25 < I ≤ 32	80
32 < I ≤ 40	90
40 < I ≤ 63	100

26.11 Elke aansluiter in 'n toestel waar aansluiters vir verbinding met vaste bedrading verskaf word en in 'n toestel met tipe X- of tipe M-bevestiging, moet naby sy ooreenstemmende aansluiter geleë wees.

26.12 Aansluiters mag nie sonder behulp van gereedskap bereik kan word nie, selfs al is hul lewendige dele nie bereikbaar nie.

26.13 Aansluiters van toestelle met tipe X-bevestiging moet so geplaas of afgeskerm wees dat, by die toets van die toestel volgens 26.13.1,

(a) die vry string van 'n geleier wat met 'n lewendige aansluiter verbind is, nie aan enige deel raak wat bereikbaar is of wat met 'n bereikbare metaaldeel verbind is nie of, in die geval van 'n klas II-toestel, met enige metaaldeel wat slegs deur aanvullende isolasie van bereikbare metaaldele geskei is nie; en

(b) die vry string van 'n geleier wat met 'n aardingsaansluiter verbind is, nie aan enige lewendige deel raak nie.

26.13.1 *Toets*. Verwyder 'n stuk isolasie wat 8 mm lank is, op die ent van 'n buigsame stringgeleier met die toepaslike nominale dwarsdeursneeoppervlakte aangegee in kolom 2 van tabel 13. Laat een string van die geleier vry en steek die oorblywende stringe heeltemal in die aansluiter en klem dit vas. Buig, sonder om die isolasie te skeur, die vry string in enige moontlike rigting, maar sonder om skerp buigings om versperring te maak, en gaan dit deurentyd na vir voldoening aan die vereistes van 26.13.

27. VOORSIENING VIR AARDING

27.1 In die geval van 'n klas OI- of klas I-toestel, moet bereikbare metaaldele wat waarskynlik lewendig sal word in geval van 'n isolasiefout, op aanneemlike wyse blywend verbind wees met 'n aardingsafsluiting binne die toestel of met die aardingskontak van die toestelinlaat. Daar mag vir die doeleindes van bogemelde vereiste nie geag word dat bereikbare metaaldele wat van lewendige dele afgeskerm is deur

If the thread in the screw hole or nut is recessed, the length of headed screws shall be increased accordingly.

26.9 A stud-type terminal shall be provided with a washer and its dimensions shall conform to the appropriate values given in Table 19.

TABLE 19—DIMENSIONS OF STUD-TYPE TERMINALS

1	2	3	4
Rated current (I) of appliance A	Nominal thread diameter, mm, min.	Difference between thread diameter and	
		inner diameter of washers, mm, max.	outer diameter of washers, mm, min.
I ≤ 10	3,0	0,4	4,0
10 < I ≤ 16	3,5	0,4	4,5
16 < I ≤ 25	4,0	0,5	5,0
25 < I ≤ 32	4,0	0,5	5,5

26.10 If the length of thread in the pillar, screw hole or nut, or the length of thread on the screw, is smaller than the appropriate value given in Table 17 or 18, as appropriate, or if the length of the extrusion on a screw-type terminal exceeds 80% of the original thickness of the metal, the terminal shall be such that when subjected to the test given in 26.10.1, the conductor does not move visibly in the terminal during the test and, after completion of the test, the terminal shows no damage that impairs its further use.

26.10.1 *Test*. Test the terminal in accordance with 28.1.1 but with the torque increased to 1,2 times the appropriate value given in Table 21. Then fasten, as in 26.4.1, a conductor in the terminal and, while clamped, subject the conductor for 1 min to an axial tension, applied without jerks, of the appropriate value given in Table 20.

TABLE 20—AXIAL TENSION

1	2
Rated current (I) of appliance, A	Tension, N
I ≤ 6	40
6 < I ≤ 16	50
16 < I ≤ 25	60
25 < I ≤ 32	80
32 < I ≤ 40	90
40 < I ≤ 63	100

26.11 In an appliance where terminals are provided for the connection to fixed wiring and in an appliance with Type X or Type M attachments, each terminal shall be located in proximity to its corresponding terminal.

26.12 Terminals shall not be accessible without the aid of a tool, even if their live parts are not accessible.

26.13 Terminals of appliances with Type X attachment shall be so located or shielded that, when the appliance is tested in accordance with 26.13.1,

(a) the free strand of a conductor connected to a live terminal shall not touch any part that is accessible or is connected to an accessible metal part or, in the case of a Class II appliance, any metal part that is separated from accessible metal parts by supplementary insulation only; and

(b) the free strand of a conductor connected to an earthing terminal shall not touch any live part.

26.13.1 *Test*. Remove an 8 mm length of insulation from the end of a flexible stranded conductor of the appropriate nominal cross-sectional area given in Column 2 of Table 13. Leave one strand of the conductor free and fully insert and clamp the remaining strands in the terminal. Without tearing the insulation back, bend the free strand in every possible direction but without making sharp bends round barriers while checking for compliance with the requirements of 26.13.

27. PROVISION FOR EARTHING

27.1 In the case of a Class OI or Class I appliance, accessible metal parts that are likely to become live in the event of an insulation fault shall be permanently connected in an acceptable manner to an earthing termination within the appliance, or to the earthing contact of the appliance inlet. Accessible metal parts that are screened from live parts by metal parts connected to the earthing terminal or earthing contact,

University of Port Harcourt
Together in Excellence

metaaldele wat met die aardingsaansluiter of aardingskontak verbind is, waarskynlik lewendig sal word as 'n isolasiefout voorkom nie. Daar word geag dat metaaldele agter 'n sierdeksel wat nie die toets in 21.1.1 deurstaan nie, bereikbare metaaldele is. 'n Aardingsaansluiter of aardingskontak mag nie elektries met 'n neutrale aansluiter verbind wees nie.

Daar mag nie op klas II-toestelle vir aarding voorsiening gemaak word nie.

27.2 Aardingsaansluiters vir verbinding met vaste bedrading en aardingsaansluiters van toestelle met tipe X- en tipe M-bevestiging moet aan die toepaslike vereistes van afdeling 26 voldoen. Skroeflose aansluiters mag nie vir die verbinding van buiteaardingsgeleiers gebruik word nie. 'n Buiteaardingsaansluiter mag nie die verbinding van geleiers met 'n nominale dwarsdeursneeoppervlakte van 2,5-6 mm² toelaat nie en mag nie gebruik word om aardingskontinuiteit tussen verskillende dele van die toestel te verskaf nie.

Die klemmiddele vir aardingsaansluiters moet so op aanneemlike wyse teen loswording bevestig wees dat dit nie moontlik is om hulle sonder gebruik van gereedskap los te maak nie.

27.3 Indien 'n afhaalbare deel 'n aardverbinding het, moet die deel sodanig wees dat hierdie verbinding bewerkstellig moet word voordat die stroomdraende verbindings gemaak kan word en dat die stroomdraende verbindings ontkoppel moet word voordat die aardverbinding deur verwydering van die deel verbreek word.

In 'n toestel met 'n kragtoevoerkoord moet die rangskikking van die aansluiters of die lengte van die geleiers tussen die koordverankering en die aansluiters sodanig wees dat daar verseker word dat, indien die koord uit die verankering gly, die stroomdraende geleiers voor die aardingsgeleier styf word.

27.4 Alle dele van 'n aardingsaansluiter moet sodanig wees dat daar geen risiko van korrosie as gevolg van kontak tussen enige van hierdie dele en die koper van 'n aardingsgeleier of enige ander metaal wat aan hierdie dele raak, is nie.

Tensy die romp van die aardingsaansluiter 'n deel van 'n metaalraam of -omhulsel is, moet dit van geelkoper of ander metaal wees wat in dieselfde mate teen korrosie bestand is. Indien die romp van die aardingsaansluiter deel van 'n metaalraam of -omhulsel is, moet die skroef of moer van geelkopergeplateerde staal wees wat aan die vereistes van 31.1 voldoen of van ander metaal wat in dieselfde mate teen korrosie bestand is. Indien die raam of omhulsel van aluminium of aluminiumlegering is, moet daar verseker wees dat daar geen moontlikheid is dat korrosie kan voorkom as gevolg van kontak tussen koper en aluminium of die legerings daarvan nie.

27.5 Volgens 27.5.1 bepaal, mag die weerstand van die verbinding tussen 'n aardingsaansluiter of aardingskontak en dele wat daarmee verbind moet word, nie 0,1 Ω oorskry nie.

27.5.1 *Toets*. Stuur 'n stroom gelyk aan 1,5 maal die aangeslane stroom, maar minstes 25 A, verkry van 'n ws-bron met 'n nullasspanning van hoogstens 12 V, tussen die aardingsaansluiter of aardingskontak, soos toepaslik, en elk (om die beurt) van die bereikbare metaaldele wat daarmee verbind is. Meet die spanningsval tussen die aardingsaansluiter of aardingskontak van die toestel en elke bereikbare metaaldeel en bereken die weerstand aan die hand van die stroom en hierdie spanningsval. Moenie die weerstand van die buigsame koord in die weerstandsmeting insluit nie.

28. SKROEWE EN VERBINDINGS

28.1 Skroefverbindings, elektries of andersins, moet die meganiese spannings wat tydens normale gebruik voorkom, deurstaan. Skroewe wat kontakdruk oordra en skroewe wat waarskynlik deur die gebruiker vasgedraai moet word en wat 'n nominale diameter van minder as 3 mm het, moet in metaal skroef en moet sodanig wees dat, volgens 28.1.1 getoets, daar geen beskadiging is wat aan die verdere gebruik van die verbindings afbreuk doen nie.

Skroewe mag nie van metaal wees wat sag is of tot kruip geneig is nie, soos sink of aluminium.

Skroewe van isoleermetaal moet 'n nominale diameter van minstens 3 mm hê; hulle mag nie vir enige elektriese verbinding gebruik word nie. 'n Skroef mag nie van isoleermateriaal wees nie indien—

(a) die vervanging daarvan deur 'n metaalskroef aan die aanvullende isolasie of versterkte isolasie afbreuk kan doen;

(b) dit 'n skroef is wat verwyder kan word wanneer 'n nie-afhaalbare buigsame kabel of koord vervang word of ander roetineversleining gedoen word en die vervanging daarvan deur 'n metaalskroef aan die basiese isolasie afbreuk kan doen.

28.1.1 *Toets*. Draai skroewe of moere 10 maal vas en los in die geval van 'n skroef wat in isoleermateriaal ingeskroef word (haal die skroef elke maal heeltemal uit en steek dit dan weer in) en 5 maal in die geval van moere en ander skroewe. By die toets van aansluitskroewe en moere, plaas in die aansluiter 'n geleier met die grootste toepaslike dwarsdeursneeoppervlakte aangegee in tabel 16 en gebruik 'n stewige (d.w.s. soliede of string-) geleier in die geval van 'n toestel wat bedoel is om blywend verbind te wees met vaste bedrading, en 'n buigsame geleier in ander gevalle.

Voer die toets met die toepaslike toetsskroewedraaier, moersleutel of

shall not, for the purpose of the above requirement, be regarded as likely to become live in the event of an insulation fault. Metal parts behind a decorative cover which does not withstand the test given in 21.1.1 shall be deemed to be accessible metal parts. An earthing terminal or earthing contact shall not be electrically connected to a neutral terminal.

Class III appliances shall have no provision for earthing.

27.2 Earthing terminals for connection to fixed wiring and earthing terminals of appliances with Type X and Type M attachments shall comply with the relevant requirements of section 26. Screwless terminals shall not be used for the connection of external earthing conductors. An external earthing terminal shall allow the connection of conductors having nominal cross-sectional areas of 2,5-6 mm² and shall not be used to provide earthing continuity between different parts of the appliance.

The clamping means of earthing terminals shall be so locked, in an acceptable manner, against loosening that it is not possible to loosen them without the aid of a tool.

27.3 If a detachable part has an earth connection, the part shall be such that this connection has to be made before the current-carrying connections can be made, and that the current-carrying connections have to be disconnected before the earth connection is broken by removal of the part.

In an appliance equipped with a power supply cord, the arrangement of the terminals, or the length of the conductors between the cord anchorage and the terminals, shall be such as to ensure that, if the cord slips out of the anchorage, the current-carrying conductors become taut before the earthing conductor.

27.4 All parts of an earthing terminal shall be such that there is no risk of corrosion resulting from contact between any of these parts and the copper of an earthing conductor, or any other metal that is in contact with these parts.

Unless the body of the earthing terminal is a part of a metal frame or enclosure, it shall be of brass or other metal no less resistant to corrosion. If the body of the earthing terminal is a part of a metal frame or enclosure, the screw or nut shall be of brass, plated steel complying with the requirements of 31.1, or other metal no less resistant to corrosion, and if the frame or enclosure is of aluminium or an aluminium alloy, it shall be ensured that there is no possibility of the occurrence of corrosion resulting from contact between copper and aluminium or its alloys.

27.5 The resistance, determined in accordance with 27.5.1, of the connection between an earthing terminal or earthing contact and parts required to be connected to it, shall not exceed 0,1 Ω.

27.5.1 *Test*. Pass a current, equal to 1,5 times the rated current but not less than 25 A, derived from an a.c. source with a no-load voltage not exceeding 12 V, between the earthing terminal or earthing contact, as relevant, and each (in turn) of the accessible metal parts connected to it. Measure the voltage drop between the earthing terminal or earthing contact of the appliance and each accessible metal part, and calculate the resistance from the current and this voltage drop. Do not include the resistance of the flexible cord in the resistance measurement.

28. SCREWS AND CONNECTIONS

28.1 Screwed connections, electrical or otherwise, shall withstand the mechanical stresses occurring in normal use. Screws that transmit contact pressure and screws that are likely to be tightened by the user and that have a nominal diameter less than 3 mm, shall screw into metal and shall be such that, when tested in accordance with 28.1.1, no damage that impairs the further use of the connections shall occur.

Screws shall not be of a metal which is soft or liable to creep, such as zinc or aluminium.

Screws of an insulating material shall have a nominal diameter of at least 3 mm; they shall not be used for any electrical connection. A screw shall not be of insulating material if—

(a) its replacement by a metal screw could impair supplementary insulation or reinforced insulation;

(b) it is a screw that may be removed when a non-detachable flexible cable or cord is replaced or other routine servicing is done and its replacement by a metal screw could impair basic insulation.

28.1.1 *Test*. Tighten and loosen screws or nuts 10 times in the case of a screw in engagement with a thread in insulating material and completely remove and re-insert the screw each time, and five times in the case of nuts, and other screws. When testing terminal screws and nuts, place in the terminal a conductor of the largest appropriate cross-sectional area given in Table 16, using a rigid (i.e. solid or stranded) conductor in the case of an appliance intended to be permanently connected to fixed wiring, and a flexible conductor in other cases.

Conduct the test, using the appropriate test screwdriver, spanner, or

-sleutel uit deur die toepaslike van die volgende wringkragte aangegee in tabel 21 aan te wend:

(a) Metaalskroewe, sonder 'n kop, wat as dit vasgedraai is nie by die gat uitsteek nie, die toepaslike wringkrag aangegee in kolom 2;

(b) moere en ander metaalskroewe: die toepaslike wringkrag aangegee in kolom 3;

(c) skroewe van isoleermateriaal, wat 'n seskantkop het waarvan die afmeting oorkants groter is as die totale draaddiameter, of 'n silindriese kop en 'n sok vir 'n spy, waar die sok 'n dwarshoekafmeting het wat groter is as die totale skroefdraaddiameter, of 'n kop met 'n gleuf of kruisgleuwe waarvan die lengte (in albei gevalle) 1,5 maal groter is as die totale skroefdraaddiameter: die toepaslike wringkrag aangegee in kolom 3;

(d) ander skroewe van isoleermateriaal: die toepaslike wringkrag aangegee in kolom 4.

TABEL 21—WRINGKRAGWAARDES

1	2	3	4
Nominale diameter (D) van skroef mm	Wringkrag, N.m		
D ≤ 2,8	0,2	0,4	0,4
2,8 < D ≤ 3,0	0,25	0,5	0,5
3,0 < D ≤ 3,2	0,3	0,6	0,6
3,2 < D ≤ 3,6	0,4	0,8	0,6
3,6 < D ≤ 4,1	0,7	1,2	0,6
4,1 < D ≤ 4,7	0,8	1,8	0,9
4,7 < D ≤ 5,3	0,8	2,0	1,0
5,3 < D ≤ 6,0	—	2,5	1,25

Wanneer 'n skroefdraaier gebruik word, moet daar seker gemaak word dat die fatsoen van sy lem geskik is vir die kop van die skroef wat getoets moet word. Skuif die geleier elke keer wat die skroef of moer losgedraai word. Moenie die skroewe en moere met rukkerige bewegings vasdraai nie.

28.2 Die deel van die metaalskroef wat in die skroefdrade in die isoleermateriaal inskroef, moet lank genoeg wees sodat dit die wringkragtoets in 28.1.1 kan deurstaan, maar met 'n wringkrag wat verhoog is tot 1,2 maal die toepaslike waarde in kolom 2 of 3, soos toepaslik, aangegee (kyk 28.1.1 *(a)* en *(b)*).

28.3 Elektriese verbindings moet so ontwerp wees dat kontakdruk nie oorgedra word deur isoleermateriaal wat kan krimp of kan vervorm nie; tensy daar genoeg veerkragtigheid in die metaaldele is om te vergoed vir enige moontlike krimping of vervorming van die isoleermateriaal.

28.4 'n Skroef met gespasieerde skroefdrade, d.w.s. 'n plaatmetaalskroef, mag nie vir die verbinding van stroomdraende dele gebruik word nie, tensy dit hierdie dele regstreeks teen mekaar vasklem en van aanneemlike sluitmiddele voorsien is.

'n Draadsnyskroef, d.w.s. 'n selfsnyskroef, mag nie vir die elektriese verbinding van stroomdraende dele gebruik word nie, tensy—

(a) dit 'n standaardmasjienskroefdraad van die volle vorm voortbring; en

(b) die skroefdraad deur saalsmeding gevorm word indien die skroef deur 'n gebruiker of installeerder vasgedraai word.

Skroefsnyskroewe en skroewe met gespasieerde skroefdraad kan gebruik word om die aardingskontinuïteit te voer, mits dit nie nodig is om die verbinding in die gebruik van die toestel te versteur nie en mits minstens twee skroewe vir elke verbinding gebruik word.

28.5 'n Skroef wat 'n meganiese verbinding tussen verskillende dele van 'n toestel bewerkstellig, moet, indien die verbinding stroom dra, deur 'n veerwaster of met 'n ander aanneemlik doeltreffende inrigting teen losraking gesluit word.

Seëlmiddel wat by verhitting sag word, word nie geag bevredigende sluiting te verskaf nie, behalwe vir skroefverbindings wat nie tydens normale gebruik aan torsie onderhewig is nie. Daar moet voorkom word dat klinknaels wat gebruik word vir stroomdraende verbindings wat tydens normale gebruik aan torsie onderhewig is, nie losraak nie, bv. deur middel van 'n nie-ronde skag of 'n toepaslike keep.

29. KRUIPAFSTANDE, VRY RUIMTES EN AFSTANDE DEUR ISOLASIE

29.1 Volgens 29.1.1 gemeet, mag die kruipafstande en vry ruimtes nie minder wees as die toepaslike waardes aangegee in tabel 22 nie, maar—

(a) indien resonansiespanning voorkom tussen die plek waar 'n wikkeling en 'n kapasitor saam verbind is en metaaldele wat slegs deur basiese isolasie van lewendige dele geskei word, mag die kruipafstande en vry ruimtes nie minder as die toepaslike waarde wees wat gespesifiseer is vir die waarde van die spanning wat deur die resonansie opgelê word, vermeerder met 4 mm in die geval van versterkte isolasie;

key by applying the applicable of the following torques given in Table 21:

(a) Metal screws without a head and that when tightened do not protrude from the hole: the appropriate torque given in Column 2;

(b) nuts and other metal screws: the appropriate torque given in Column 3;

(c) screws of insulating material and that have a hexagonal head with the dimension across flats greater than the overall thread diameter; or a cylindrical head and a socket for a key, the socket having a cross-corner dimension greater than the overall thread diameter; or a head having a slot or cross slots of length (in both cases) more than 1,5 times the overall thread diameter: the appropriate torque given in Column 3;

(d) other screws of insulating material: the appropriate torque given in Column 4.

TABLE 21—TORQUE VALUES

1	2	3	4
Nominal diameter (D) of screw, mm	Torque, N.m		
D ≤ 2,8	0,2	0,4	0,4
2,8 < D ≤ 3,0	0,25	0,5	0,5
3,0 < D ≤ 3,2	0,3	0,6	0,6
3,2 < D ≤ 3,6	0,4	0,8	0,6
3,6 < D ≤ 4,1	0,7	1,2	0,6
4,1 < D ≤ 4,7	0,8	1,8	0,9
4,7 < D ≤ 5,3	0,8	2,0	1,0
5,3 < D ≤ 6,0	—	2,5	1,25

When using a screwdriver, ensure that the shape of its blade suits the head of the screw to be tested. Move the conductor each time the screw or nut is loosened. Do not tighten the screws and nuts in jerks.

28.2 The length of engagement of a metal screw that engages with threads in an insulating material shall be sufficient to enable it to withstand the torque test given in 28.1.1 but with the torque increased to 1,2 times the appropriate value given in Column 2 or 3, as relevant (see 28.1.1 *(a)* and *(b)*).

28.3 Electrical connections shall be so designed that contact pressure is not transmitted through insulating material that is liable to shrink or become distorted unless there is sufficient resiliency in the metallic parts to compensate for any possible shrinkage or distortion of the insulating material.

28.4 A spaced-threaded screw, i.e. a sheet metal screw, shall not be used for the connection of current carrying parts, unless it clamps these parts directly in contact with each other and is provided with an acceptable means of locking.

A thread-cutting, i.e. self-tapping, screw shall not be used for the electrical connection of current-carrying parts unless—

(a) it generates a full-form standard machine screw thread; and

(b) if it is liable to be operated by a user or installer, the thread is formed by a swaging action.

Thread-cutting and space-threaded screws may be used to supply earthing continuity, provided that it is not necessary to disturb the connection in the use of the appliance, and that at least two screws are used for each connection.

28.5 A screw that makes a mechanical connection between different parts of an appliance shall, if the connection carries current, be locked against loosening by means of a spring-washer or other acceptably effective device.

Sealing compound that softens on heating shall not be deemed to provide satisfactory locking except for screw connections that are not subject to torsion in normal use. Rivets used for current-carrying connections that are subject to torsion in normal use shall be prevented from loosening, for example by means of a non-circular shank or an appropriate notch.

29. CREEPAGE DISTANCES, CLEARANCES, AND DISTANCES THROUGH INSULATION

29.1 Creepage distances and clearances, measured in accordance with 29.1.1, shall be not less than the relevant values given in Table 22, provided that

(a) if a resonance voltage occurs between the point where a winding and a capicitor are connected together and metal parts separated from live parts by basic insulation only, the creepage distance and clearance shall be not less that the appropriate value specified for the value of the voltage imposed by the resonance, increased, in the case of reinforced insulation, by 4 mm;

(b) in die geval van lewendige dele van verskillende polariteit wat slegs deur basiese isolasie geskei is, word kruiptoestande en vry ruimtes wat kleiner is as dié wat in die tabel gespesifiseer is, toegelaat mits, ooreenkomstig die vereistes van hierdie spesifikasie, die toestel nie onveilig raak wanneer hierdie kruipafstande en vry ruimtes na mekaar gekortsluit word nie en die kruipafstande oor isoleermetaal is wat die toets in 30.3.1 deurstaan;

(c) wanneer vry ruimtes tussen aansluiters en bereikbare metaaldele gemeet word met die skroewe of moere so ver moontlik uitgeskroef (kyk 29.1.1 *(b)* (5)), nag die vry ruimtes nie minder as 50% van die toepaslike waardes in tabel 22 wees nie;

(d) in die geval van 'n toestel met 'n elektroniese baan, geld die bykomende vereistes in B-9.1 van aanhangsel B ook.

(b) for live parts of different polarity separated by basic insulation only, creepage distances and clearances smaller than those specified in the table shall be allowed, provided that in accordance with the requirements of this specification, the appliance does not become unsafe when these creepage distances and clearances are short-circuited consecutively, and the creepage distances are over insulating material that withstands the test given in 30.3.1;

(c) when clearances between terminals and accessible metal parts are measures with the screws or nuts unscrewed as far as possible (see 29.1.1 *(b)* (5)), the clearances shall be not less than 50% of the appropriate values given in Table 22;

(d) in the case of an appliance that incorporates an electronic circuit, the additional requirements given in B-9.1 of Annexure B shall also apply.

TABEL 22—KRUIPAFSTANDE EN VRY RUIMTES

1	2	3	4	5	6	7	8	9
Dele	Vereiste, mm, mm.							
	Klas III-toestelle				Ander toestelle			
	Werkspanning ≤ 50*		Werkspanning ≤ 130*		Werkspanning > 130 ≤ 250 V		Werkspanning > 250 ≤ 440 V	
	Kruipafstand	Vry ruimte	Kruipafstand	Vry ruimte	Kruipafstand	Vry ruimte	Kruipafstand	Vry ruimte
Tussen lewendige dele van verskillende polariteit†								
(a) Indien beskerm teen vullisaanpakking‡	1,0	1,0	1,0	1,0	2,0	2,0	2,0	2,0
(b) Indien nie teen vullisaanpakking beskerm nie	2,0	1,5	2,0	1,5	3,0	2,5	4,0	3,0
(c) Indien wikkelings vernis of geëmaljeer is	1,0	1,0	1,5	1,5	2,0	2,0	3,0	3,0
Tussen lewendige dele en ander metaaldele oor basiese isolasie								
(a) Indien beskerm teen vullisaanpakking‡								
(1) Indien van keramiekmateriaal of suiwer mika en soortgelyke materiaal	1,0	1,0	1,0	1,0	2,5§	2,5§	-	—
(2) Indien van ander materiaal	1,5	1,0	1,5	1,0	3,0	2,0		—
(b) Indien nie teen vullisaanpakking beskerm nie	2,0	1,5	2,0	1,5	4,0	3,0	-	—
(c) Indien die lewendige dele wikkelings is wat vernis of geëmaljeer is	1,0	1,0	1,5	1,5	2,0	2,0	-	—
(d) Op die punt van ronde manteltipe verhittingselement¶	—	—	1,0	1,0	1,0	1,0	—	—
Tussen lewendige dele en ander metaaldele oor versterkte isolasie								
(a) Indien die lewendige dele wikkelings is wat vernis of geëmaljeer is	—	—	6,0	6,0	6,0	6,0	—	—
(b) Ander lewendige dele	—	—	8,0	8,0	8,0	8,0	—	—
Tussen metaaldele wat daar aanvullende isolasie geskei is	—	—	4,0	4,0	4,0	4,0	—	—
Tussen lewendige dele in inlatings in die monteervlak van 'n toestel en die oppervlak waarteen dit bevestig is	2,0	2,0	6,0	6,0	6,0	6,0	—	—

* Hierdie waardes geld nie vir bedrukte bedradingsbane nie.

† Die vry ruimtes wat gespesifiseer is, geld nie op die lugspleet tussen die kontakte van termiese kontroles, oorlasbeveiligingsinrigtings, skakelaars van mikrospleetkonstruksie en soortgelyke toestelle nie en ook nie op die lugspleet tussen die stroomdraende dele van sodanige inrigtings waarin die vry ruimte na gelang van die beweging van die kontakte wissel nie.

‡ Die binnekant van 'n toestel met 'n aanneemlik stofdigte omhulsel word geag beskerm te wees teen die aanpak van vullis en hermetiese verseëling word nie vereis nie, mits die toestel nie self stof opwek nie.

§ Indien die dele stewig en deur vormstukke in posisie gehou word of indien die ontwerp andersins sodanig is dat 'n afstand nie deur vervorming of beweging van die dele verminder kan word nie, kan hierdie waarde tot 2,0 verminder word.

¶ Geld slegs vir klas O-, OI- en klas I-toestelle.

VIDE LUMINE TUO LUMEN VIDEBIMUS
University of Fort Hare
Together in Excellence

TABLE 22—CREEPAGE DISTANCES AND CLEARANCES

1	2	3	4	5	6	7	8	9
Parts	Requirement, mm, min.							
	Class III appliances				Other appliances			
	Working voltage ≤ 50*		Working voltage ≤ 130*		Working voltage > 130 ≤ 250 V		Working voltage > 250 ≤ 440 V	
	Creepage distance	Clearance	Creepage distance	Clearance	Creepage distance	Clearance	Creepage distance	Clearance
Between live parts of different polarity:†								
(a) If protected against deposition of dirt	1,0	1,0	1,0	1,0	2,0	2,0	2,0	2,0
(b) If not protected against deposition of dirt	2,0	1,5	2,0	1,5	3,0	2,5	4,0	3,0
(c) If lacquered or enamelled windings	1,0	1,0	1,5	1,5	2,0	2,0	3,0	3,0
Between live parts and other metal parts over basic insulation:								
(a) If protected against deposition of dirt‡								
(1) If of ceramic material or pure mica and the like	1,0	1,0	1,0	1,0	2,5§	2,5§	—	—
(2) If of other material	1,5	1,0	1,5	1,0	3,0	2,0	—	—
(b) If not protected against deposition of dirt	2,0	1,5	2,0	1,5	4,0	3,0	—	—
(c) If the live parts are lacquered or enamelled windings	1,0	1,0	1,5	1,5	2,0	2,0	—	—
(d) At the end of tubular sheathed-type heating elements¶	—	—	1,0	1,0	1,0	1,0	—	—
Between live parts and other metal parts over reinforced insulation:								
(a) If the live parts are lacquered or enamelled windings	—	—	6,0	6,0	6,0	6,0	—	—
(b) Other live parts	—	—	8,0	8,0	8,0	8,0	—	—
Between metal parts separated by supplementary insulation	—	—	4,0	4,0	4,0	4,0	—	—
Between live parts in recesses in the mounting face of an appliance and the surface to which it is fixed	2,0	2,0	6,0	6,0	6,0	6,0	—	—

* These values do not apply to printed wiring circuits.

† The clearances specified do not apply to the air gap between the contacts of thermal controls, overload protection devices, switches of micro-gap construction and the like, or to the air gap between the current-carrying members of such devices in which the clearance varies with the movement of the contacts.

‡ The interior of an appliance having an acceptably dust-proof enclosure shall be considered to be protected against deposiuon of dirt and, provided that the appliance does not generate dust within itself, hermetic sealing is not required.

§ If the parts are rigid and located by mouldings, or if the design is otherwise such that a distance cannot be reduced by distortion or movement of the parts, this vlaue may be reduced to 2,0.

¶ Applicable only to Class O, Class OI and Class I appliances.

29.1.1 Toets

(a) Toetstoestande

(1) Indien 'n toestel 'n toestelinlaat het, bring die toepaslike verbinder aan.

(2) Plaas beweegbare dele in die ongunstigste posisie, maar moenie nie-ronde moere en skroewe met nie-ronde koppe verstel nie.

(3) By die beoordeling van die kruipafstande en vry ruimtes, slaan ag op die uitwerking van isoleervoerings van metaalomhulsels en -dekstukke.

(4) Ag dat binnegeleiers kaal is tensy hul isolasie 'n toets vir elektriese sterkte deurstaan waarin 'n spanning van 2 000 V 15 min. lank tussen die geleier en metaalfoelie wat om die isolasie gedraai is, aangelê is.

(b) Prosedure. Meet die kruipafstande en vry ruimtes volgens aanhangsel E en soos volg:

(1) Indien 'n versperring wat in twee dele is waarvan die passvlakke nie vasgelym is nie, tussenin geplaas word, meet die kruipafstande deur die voeg.

(2) Indien 'n versperring, uitgesonderd soos in (1) hierbo beskryf, tussenin geplaas word, meet die vry ruimtes oor die versperring.

(3) In die geval van 'n toestel met tipe X-bevestiging, doen die metings sonder toevoergeleiers en ook nadat toevoergeleiers met die grootste toepaslike dwarsdeursneeoppervlakte aangegee in tabel 16 aangebring is.

(4) Doen die metings met bande, indien daar is, op hul plek en met die bandspaninrigtings op die ongunstigste instelling, en ook as die band(e) afgehaal is.

(5) Meet die vry ruimtes tussen aansluiters en bereikbare metaaldele en herhaal die metings met die skroewe of moere sover moontlik losgedraai.

29.1.1 *Test*

(a) Test conditions

(1) If an appliance has an appliance inlet, fit the appropriate connector.

(2) Place moveable parts in the most unfavourable position, but do not re-adjust non-circular nuts and screws with non-circular heads.

(3) When assessing creepage distances and clearances, take into consideration the effect of insulating linings of metal enclosures and covers.

(4) Consider internal conductors to be bare unless their insulation withstands an electric strength test in which a voltage of 2 000 V is applied for 15 min, between the conductor and metal foil wrapped around the insulation.

(b) Procedure. Measure the creepage distances and clearances in accordance with Annexure E, and as follows:

(1) If a barrier that is in two parts with mating surfaces not cemented together, is interposed, measure the creepage distance through the joint.

(2) If a barrier, other than as described in (1) above, is interposed, measure clearances over the barrier.

(3) If the appliance has a Type X attachment, take the measurements without supply conductors, and also after fitting supply conductors of the largest appropriate cross-sectional area given in Table 16.

(4) Take the measurements with belts, if any, in position and the belt tensioning devices at the most unfavourable setting, and also with the belt(s) removed.

(5) Measure the clearances between terminals and accessible metal parts and repeat the measurements with the screws or nuts unscrewed as far as possible.

University of Fort Hare
Together in Excellence

(6) Meet afstande deur gleuwe of openings in buitedele van isoleermateriaal na metaalfoelie wat in aanraking is met die bereikbare oppervlak(ke) van die isoleermateriaal en wat in hoeke gedruk is met die toetsvinger in fig. 1 afgebeeld.

(7) Terwyl die metings gedoen word, probeer om die kruipafstande en vry ruimtes te verminder deur 'n krag van 2 N op enige plek op kaal geleiers en op ongeïsoleerde kapillêre buise van termostate en soortgelyke toestelle aan te wend en 'n krag van 30 N op enige ander plek aan die buitekant van metaalomhulsels.

Wend die krag aan met behulp van 'n toetsvinger met 'n punt soos in fig. 1 afgebeeld.

29.2 Die afstand deur isolasie, in die geval van werkspannings tot en met 250 V, tussen metaaldele mag nie minder as 1,0 mm wees nie indien hulle deur aanvullende isolasie geskei is en nie minder as 2,0 mm nie indien hulle deur versterkte isolasie geskei is, tensy die isolasie in die vorm van 'n dun plaat aangebring is en uit minstens drie lae bestaan wat sodanig is dat as twee lae op mekaar geplaas word, hulle 'n spanning van 3 750 V soos in 16.1.3 *(b)*, aangelê tussen die buiteoppervlakke van die twee lae, deurstaan sonder dat daar enige oorvonking of deurslag is. Daar moenie geag word dat die bogemelde vereiste impliseer dat die voorgeskrewe afstand slegs deur soliede isolasie moet wees nie; dit kan bestaan uit 'n dikte van soliede isolasie plus een of meer luglae.

29.3 In 'n toestel met 'n aangeslane stroom van meer as 25 A, moet die afstand tussen die aansluiters en metaalomhulsels minstens 9,5 mm wees.

30. BESTANDHEID TEEN HITTE, BRAND EN SPOORVORMING

30.1 Buitedele van isoleermateriaal, wat by agteruitgang kan veroorsaak dat die toestel onveilig raak, moet, in die geval van nie-keramiekmateriaal wat hittebestand moet wees, sodanig wees dat, ingens 30.1.1 getoets, die diameter van die duik wat die bal maak, nie 2 mm oorskry nie.

30.1.1 *Toets.* Gebruik 'n apparaat soos in fig. 14 aangetoon, met 'n totale massa van 2 $^{+0,05}_{-0}$ kg, en onderwerp die omhulsel en ander buitedele van die isoleermateriaal aan 'n boldruktoets.

Voer die toets uit in 'n verhittingskamer by 'n temperatuur van 75 ± 2 °C of by 'n temperatuur wat 40 ± 2 °C hoër is as die temperatuurstyging van die toepaslike deel volgens 11.1.1 bepaal, watter ook al die hoogste is.

Terwyl die deel wat getoets moet word, in 'n horisontale posisie vas is, steun die bol van die apparaat op die oppervlak wat getoets word. Haal die apparaat na 1 uur af en meet die diameter van die duik wat die bol gelaat het.

30.2 Behalwe in geval van dele wat van keramiekmateriaal is, isoleerdele van kommutators of borseldoppe en dergelike en kronkelvormers wat nie as versterkte isolasie gebruik word nie, moet 'n isoleerdeel wat 'n lewendige deel in posisie hou, in so 'n mate bestand wees teen hitte en brand dat, volgens 30.2.1 getoets, die diameter van die duik wat die bol gedurende stadium *(a)* maak, nie 2 mm oorskry nie en dat nòg die isoleermateriaal nòg enige gas wat gedurende stadium *(c)* voortgebring word, deur die vonke ontsteek word.

30.2.1 *Toets*

(a) Herhaal die toets in 30.1.1, maar by 'n temperatuur van 125 ± 2 °C of by 'n temperatuur wat 40 ± 2 °C hoër is as die temperatuurstyging van die toepaslike deel volgens 11.1.1 bepaal, watter ook al die hoogste is, en onderwerp elke isoleerdeel dan aan 'n toets met 'n elektries verhitte koniese spil in 'n apparaat soos in fig. 15 afgebeeld.

(b) Ruim in die deel wat getoets moet word, 'n koniese gat op so 'n wyse dat die uitsteeksels van die koniese deel van die spil bo die boonste en onderste oppervlak van die deel wat getoets word, gelyk sal wees en die spil styf in die gat sal pas. Monteer die deel in die apparaat soos in fig. 15 aangetoon, belas die spil sodat dit 'n krag van 12 N uitoefen en sluit die middele waarmee die krag aangewend is om enige verdere beweging van die spil te verhoed.

(c) Verhit die spil binne ongeveer 3 min. tot 'n temperatuur van 300 °C, gemeet met behulp van die termokoppel in die spil, en hou dit 2 min lank binne 10 °C van hierdie waarde.

Gebruik 'n hoëfrekwensie-vonkopwekker om gedurende die hele verhittingstydperk vonke wat ongeveer 6 mm lank is, voort te bring om die plek waar die spil uit die boonste oppervlak van die isoleermateriaal steek.

30.3 Behalwe in die geval van isoleerdele van kommutators en borseldoppe en keramiekdele, moet 'n isoleerdeel wat 'n lewendige deel in posisie hou en aanvullende isolasie van metaalomhulde klas II-toestelle wat (in gevalle) gedurende normale gebruik aan vogneerslag en vullisaanpakking blootgestel is, tensy die kruipafstande gelyk is aan minstens twee maal die toepaslike waardes in 29.1 gespesifiseer, van materiaal wees wat so bestand is teen spoorvorming dat, volgens 30.3.1

(6) Measure distances through slots or openings in external parts of insulating material to metal foil that is in contact with the accessible surface(s) of the insulating material and that has been pressed into corners with the test finger shown in Fig. 1.

(7) While taking the measurements, endeavour to reduce the creepage distances and clearances by applying a force of 2 N to any point on bare conductors, and on uninsulated capillary tubes of thermostats and similar devices, and a force of 30 N to any point on the outside of metal enclosures.

Apply the force by means of a test finger having a tip as shown in Fig. 1.

29.2 The distance through insulation, for working voltages up to and including 250 V, between metal parts shall be not less than 1,0 mm if they are separated by supplementary insulation, and not less than 2,0 mm if separated by reinforced insulation, unless the insulation is applied in thin sheet form and consists of at least three layers that are such that, when two layers are placed in contact, they withstand, without the occurrence of any flashover or breakdown, a voltage of 3 750 V as in 16.1.3 *(b)*, applied between the outer surfaces of the two layers. The above requirement shall not be considered to imply that the prescribed distance must be through solid insulation only; it may consist of a thickness of solid insulation plus one or more air layers.

29.3 In an appliance having a rated current exceeding 25 A the distance between the terminals and metal enclosures shall be at least 9,5 mm.

30. RESISTANCE TO HEAT, FIRE, AND TRACKING

30.1 External parts of insulating material, the deterioration of which might cause an appliance to become unsafe, shall in the case of a non-ceramic material that is required to be heat resistant, be such that, when tested in accordance with 30.1.1, the diameter of the impression made by the ball does not exceed 2 mm.

30.1.1 *Test.* Using an apparatus as shown in Fig. 14 and of total mass 2 $^{+0,05}_{-0}$ kg, subject enclosures and other external parts of insulating material to a ball-pressure test.

Carry out the test in a heating cabinet at a temperature of 75 ± 2 °C, or at a temperature that is 40 ± 2 °C in excess of the temperature rise of the relevant part determined in accordance with 11.1.1, whichever is the higher.

With the part to be tested secured in a horizontal position, support the ball of the apparatus on the surface under test. Remove the apparatus after 1 h and measure the diameter of the impression made by the ball.

30.2 Except in the cases of parts made of ceramic material, insulating parts of commutators, or brush-caps and the like, and coil formers not used as reinforced insulation, an insulating part that retains a live part in position shall be so resistant to heat and fire that, when tested in accordance with 30.2.1, the diameter of the impression made by the ball during stage *(a)* does not exceed 2 mm, and that neither the insulating material nor any gases produced during stage *(c)* are ignited by the sparks.

30.2.1 *Test.*

(a) Repeat the test given in 30.1.1 but at a temperature of 125 ± 2 °C, or at a temperature that is 40 ± 2 °C in excess of the temperature rise of the relevant part determined in accordance with 11.1.1, whichever is the higher, and then subject each insulating part to a test made with an electrically heated conical mandrel in an apparatus as shown in Fig. 15.

(b) In the part to be tested ream a conical hole in such a way that the protrusions of the conical part of the mandrel from the upper and lower surface of the part under test will be equal and that the mandrel fits snugly into the hole. Mount the part in the apparatus as shown in Fig. 15, so load the mandrel that it exerts a force of 12 N, and so lock the means by which the force was applied as to prevent any further movement of the mandrel.

(c) Heat the mandrel in approximately 3 min. to a temperature of 300 °C, measured by means of the thermocouple in the mandrel, and maintain it within 10 °C of this value for 2 min.

By means of a high-frequency spark generator produce during the entire heating period, sparks of length about 6 mm round the point where the mandrel protrudes from the upper surface of the insulating material.

30.3 Except in the cases of the insulating parts of commutators and brush-caps and ceramic parts, an insulating part that retains a live part in position and supplementary insulation of metal-encased Class II appliances, that (in both cases) are exposed to deposition of moisture or dirt in normal use, shall, unless the creepage distances are equal to at least twice the relevant values specified in 29.1, be of a material that is so resistant to tracking that, when tested in accordance with 30.3.1,

getoets, geen oorvonking of deurslag tussen elektrodes voorkom voordat 50 druppels van die oplossing geval het nie.

30.3.1 *Toets*

(a) *Apparaat.* Twee elektrodes van platinum of ander niekorrodeerbare materiaal, van die afmetings in fig. 16 aangetoon, wat verbind is met ws-toevoer van ongeveer sinusgolfvorm, by 'n frekwensie van 50 Hz, en met 'n nullasspanning van 175 V wat met hoogstens 17,5 V verminder word as die elektrodes gekortsluit word. Die totale impedansie van die baan terwyl die elektrodes gekortsluit is, moet so verstel word, met behulp van 'n reëlbare resistor, dat die stroom gelyk is aan 1,0 ± 0,1 A met 'n drywingsfaktor van tussen 0,9 en 1. Die baan moet 'n oorstroomrelê insluit van sodanige ontwerp dat sodra die stroom 'n waarde van 0,5 A bereik, die stroom onderbreek word na 'n tydperk wat so kort moontlik maar minstens 2 s is.

(b) *Toetsoplossing.* 'n Oplossing van ammoniumchloried in gedistilleerde water, met 'n volumeresistiwiteit van 400 Ω cm by 25 °C (dit stem ooreen met 'n konsentrasie van ongeveer 1 g/ℓ)

(c) *Prosedure.* Steun horisontaal 'n plat deel, wat verkieslik minstens 15 mm × 15 mm groot is, van die deel wat getoets moet word en plaas op die manier in fig. 16 aangetoon, die twee elektrodes so op die toetsdeel dat die ronde rande van die elektrodes oor hul hele lengte daaraan raak. Skakel die stroom aan, laat druppels met 'n volume van 20 $^{+5}_{-0}$ mm³ van die toetsoplossing van 'n hoogte van 30-40 mm teen 'n tempo van een druppel elke 30 ± 5 s op die toetsdeel val op 'n plek wat in die middel tussen die twee elektrodes is en bepaal hoeveel druppels val voordat oorvonking of deurslag tussen die elektrodes voorkom.

Herhaal bogemelde prosedure op twee ander dele van die deel en maak seker dat, voor die begin van elke toets, die elektrodes skoon is en so gevorm en in posisie geplaas is dat die ronde rande oor die hele lengte daarvan aan die toetsdeel raak.

31. BESTANDHEID TEEN KORROSIE

31.1 Ysterhoudende komponente wat kan veroorsaak dat 'n toestel onveilig raak as dit korrodeer, moet so teen korrosie beskerm wees dat, nadat dit aan die behandeling 31.1.1 onderwerp is, die oppervlakke geen teken van roes toon nie, uitgesonderd spore van roes op skerp rande.

31.1.1 *Toets*

(a) Moenie, soos in *(b)* hieronder, 'n deel soos 'n klein heliese veer of 'n deel wat aan skuurwerking blootgestel is, wat bedek is met 'n laag vet behandel nie, tensy daar twyfel bestaan oor die doeltreffendheid van die vetlaag as beskerming teen korrosie, in welke geval die deel behandel moet word sonder om die vetlaag vooraf te verwyder.

(b) Ontvet die deel wat getoets moet word, deur dit 10 min. lank in trichlooretileen te laat lê. Nadat dit uit die trichlooretileen gehaal is, laat die deel droog word en laat dit dan 10 min. lank in 'n 100 g/ℓ oplossing van ammoniumchloried in gedistileerde water by 'n temperatuur van 20 ± 5 °C lê.

Haal die deel uit die oplossing, skud die druppels ammoniumchloriedoplossing af (maar moet dit nie droog maak nie) en plaas dit 10 min. lank in 'n kabinet wat lug bevat wat met vog versadig is en wat by 'n temperatuur van 20 ± 5 °C is. Haal die deel uit die kabinet en ondersoek die oppervlak vir tekens van roes, uitgesonderd spore van roes op skerp rande en enige geel laag wat met 'n sagte, skoon doek afgevryf kan word.

32. STRALING

32.1 'n Toestel mag nie skadelike strale in sulke hoeveelhede uitstraal dat dit nie aan die spesifieke vereistes voldoen nie.

no flashover or breakdown between electrodes occurs before 50 drops of the solution have fallen.

30.3.1 *Test*

(a) *Apparatus.* Two electrodes, of platinum or other sufficiently non-corrodible material and of the dimensions shown in Fig. 16, that are connected to an a.c. supply of approximately sine-wave form, of frequency 50 Hz, and having a no-load voltage of 175 V that is not reduced by more than 17,5 V when the electrodes are short-circuited. The total impedance of the circuit with the electrodes short-circuited, shall be so adjusted, by means of a variable resistor, that the current is equal to 1,0 ± 0,1 A with a power factor of between 0,9 and 1. The circuit shall include an overcurrent relay of such design that, when the current has reached a value of 0,5 A, the circuit is interrupted after a period which is as short as possible but is at least 2 s.

(b) *Test solution.* A solution of ammonium chloride in distilled water, having a volume resistivity of 400 Ω cm at 25 °C (corresponding to a concentration of about 1 g/ℓ).

(c) *Procedure.* Support horizontally a flat area, of size preferably at least 15 mm × 15 mm, of the part to be tested and so place, in the manner shown in Fig. 16, the two electrodes on the test area that the rounded edges of the electrodes are in contact with it over their entire length. Switch on the current, allow drops, of volume 20 $^{+5}_{-0}$ mm³, of the test solution to fall through a height of 30-40 mm and at a rate of one drop every 30 ± 5 s, onto the test area at a point mid-way between the electrodes, and determine the number of drops that fall before flashover or breakdown occurs between the electrodes.

Repeat the above procedure on two other areas on the part, ensuring before each test is started, that the electrodes are clean and so shaped and positioned that their rounded edges are in contact with the test area over their whole length.

31. RESISTANCE TO CORROSION

31.1 Ferrous components, the corrosion of which might cause an appliance to become unsafe, shall be so protected against corrosion that after being subjected to the treatment given in 31.1.1, the surfaces show no sign of rust other than traces of rust on sharp edges.

31.1.1 *Test.*

(a) Do not treat as in *(b)* below, a part, such as a small helical spring or a part exposed to abrasion, that is covered with a layer of grease unless doubt exists as to the effectiveness of the grease film as a protection against corrosion, in which case treat the part without previous removal of the grease.

(b) Degrease the part to be tested by immersing it for 10 min. in trichloroethylene. After removing it from the trichloroethylene, allow the part to dry, and then immerse it for 10 min. in a 100 g/ℓ solution of ammonium chloride in distilled water at a temperature of 20 ± 5 °C.

Remove the part from the solution, shake off the drops of ammonium chloride solution (but do not dry it), and place it for 10 min. in a cabinet containing air saturated with moisture and at a temperature of 20 ± 5 °C. Remove the part from the cabinet and inspect the surface for signs of rust, other than traces of rust on sharp edges and any yellowish film removable by rubbing with a soft clean cloth.

32. RADIATION

32.1 An appliance shall not emit harmful radiation in such amounts that it fails to comply with the specific requirements.

University of Pretoria
Excellence

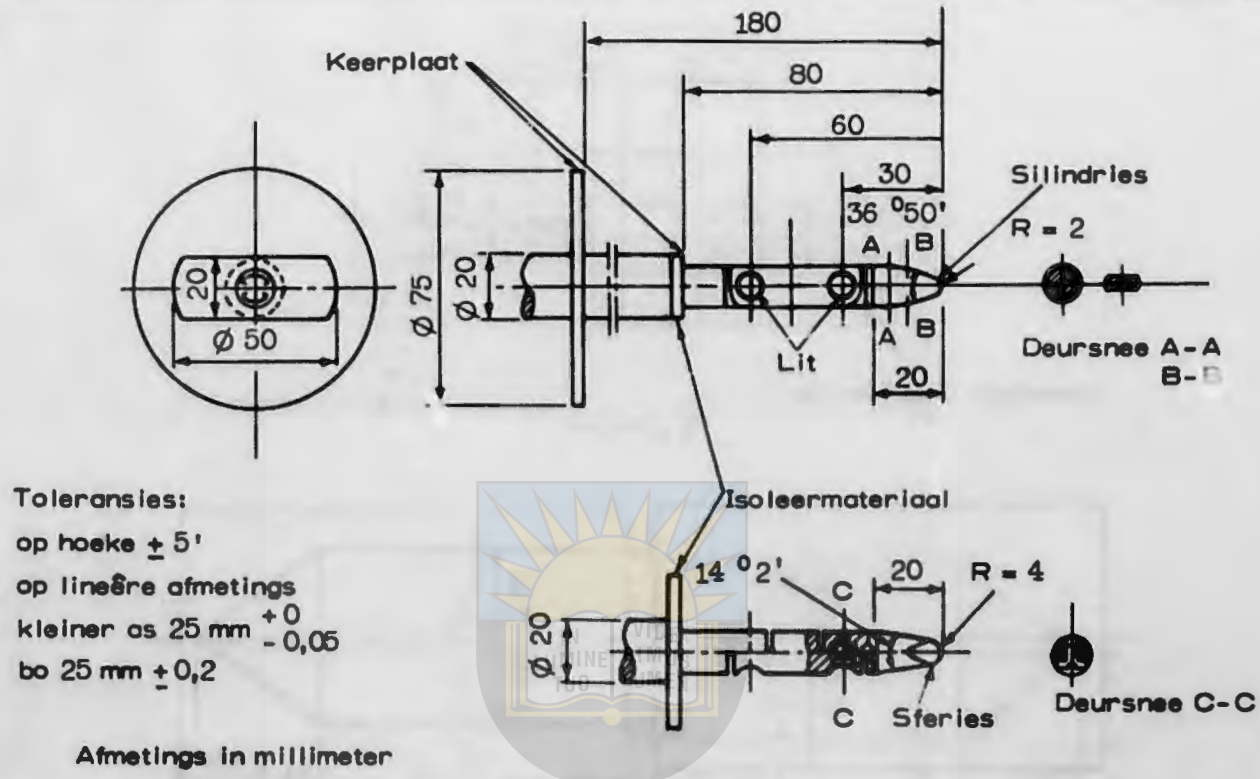

Fig. 1—Standaardtoetsvinger

University of Fort Hare
Together in Excellence

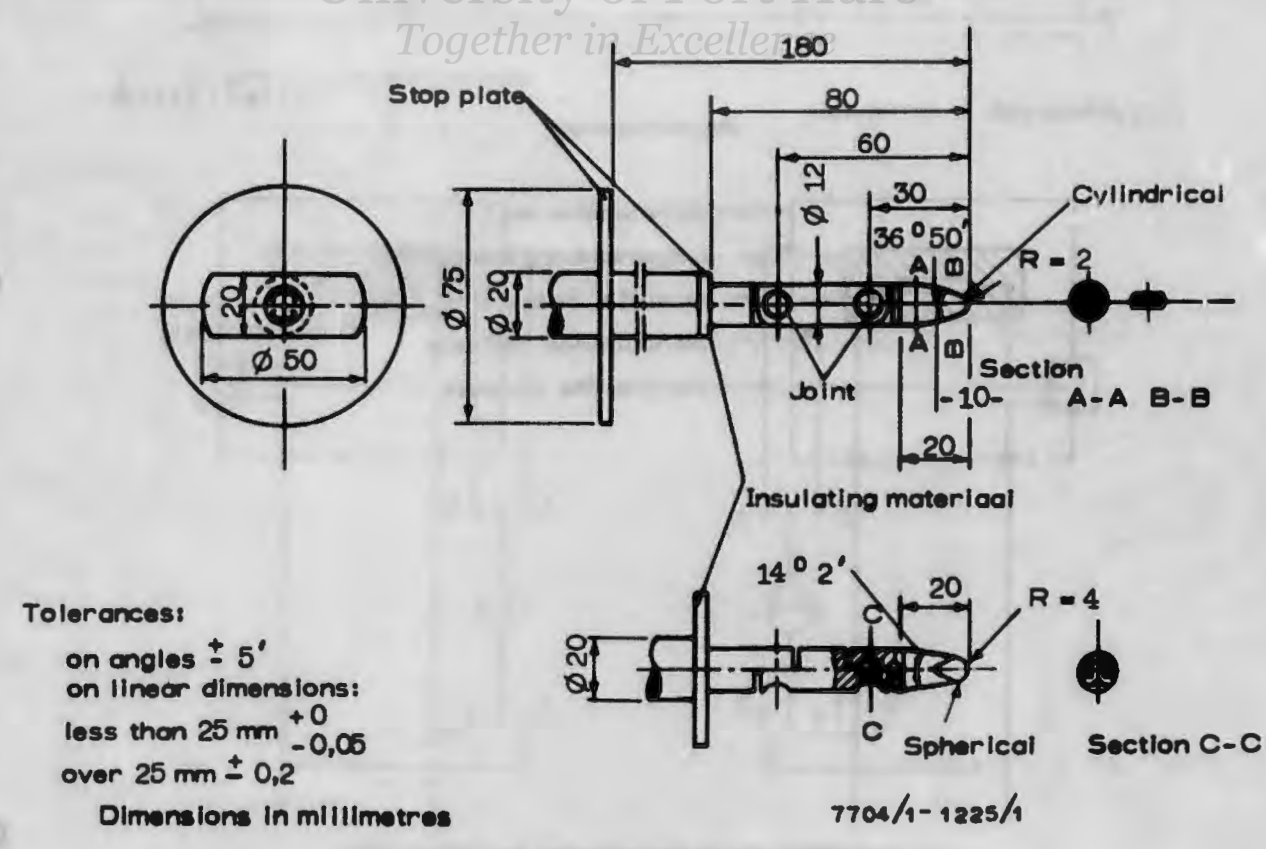

Fig. 1—Standard Test Finger

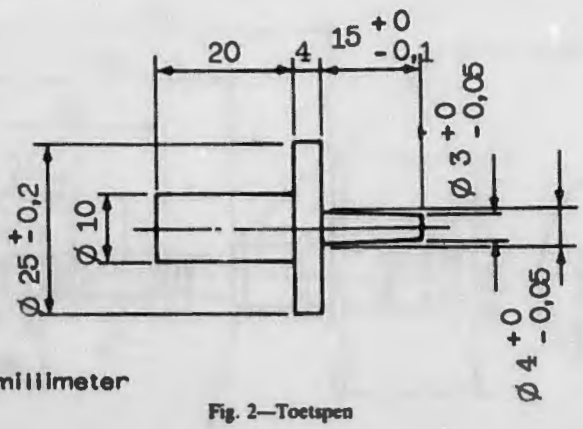

Afmetings in millimeter

Fig. 2—Toetspen

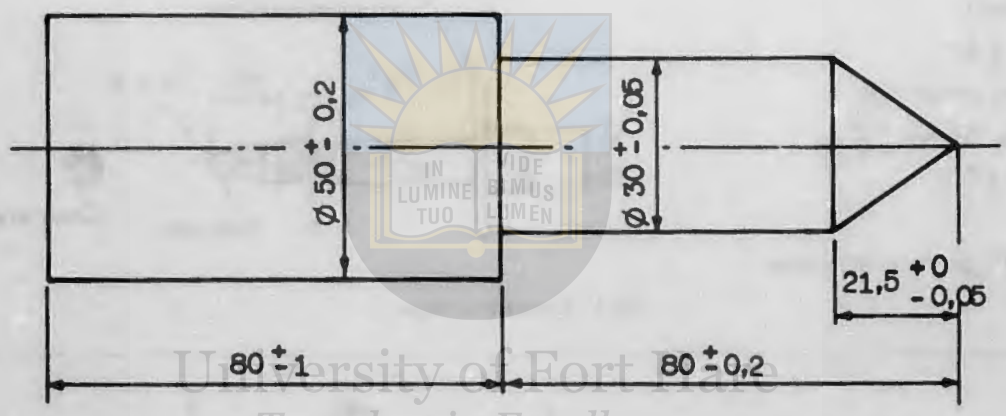

Afmetings in millimeter

Fig. 3—Toetsvoetpen

7708/1-1225/1

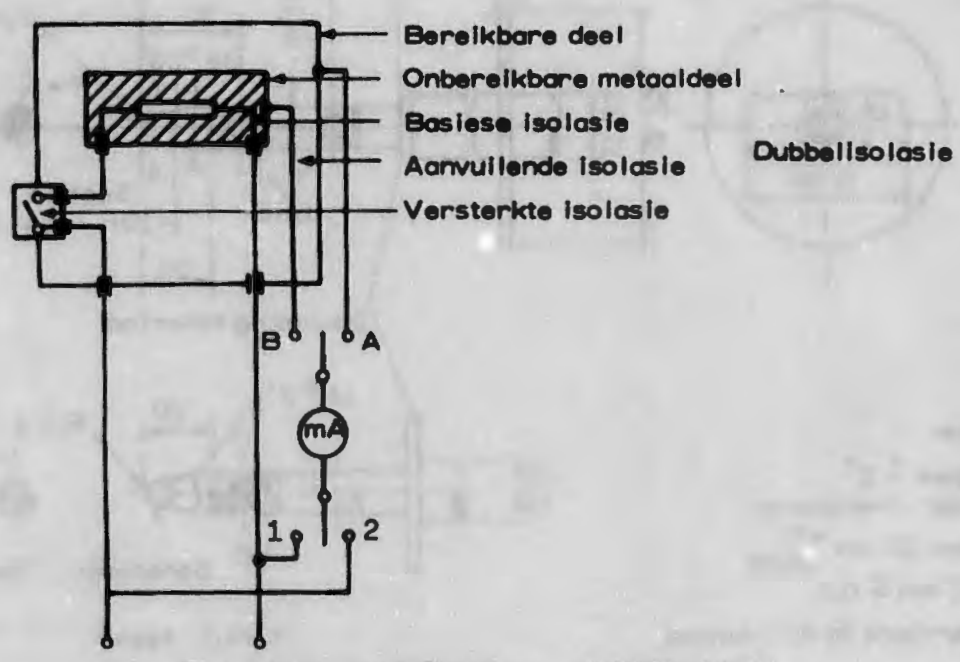

Fig. 4—Lekstroommeting by Werktemperatuur: Verbindings vir Enkelfasige Klas II-toestelle

University of Fort Hare
Together in Excellence

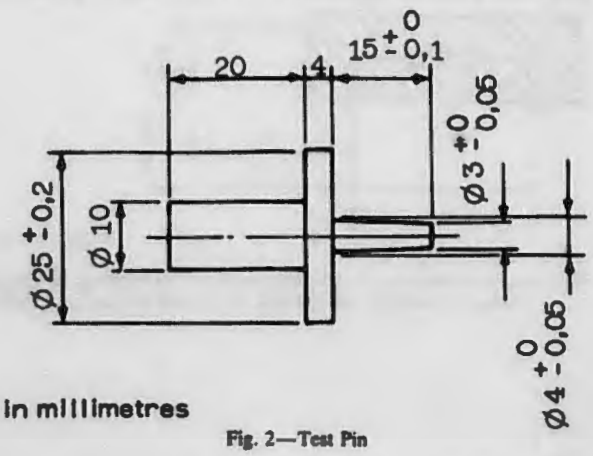

Dimensions in millimetres

Fig. 2—Test Pin

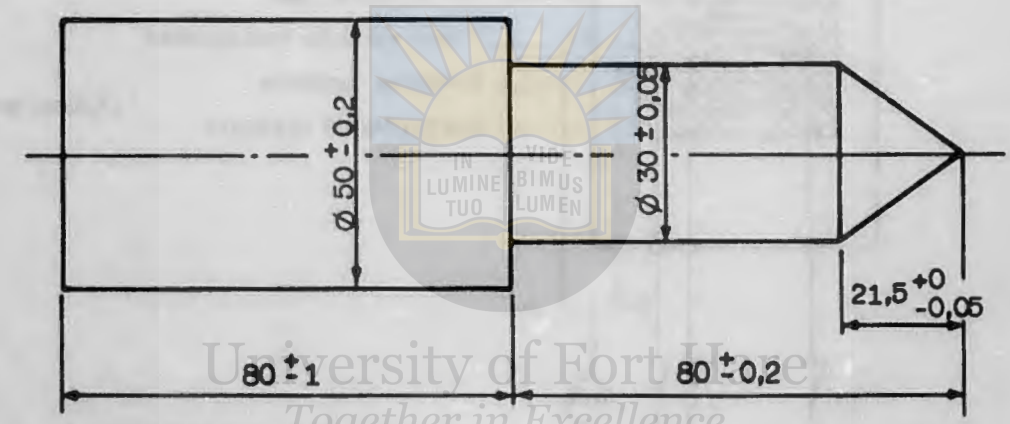

Dimensions in millimetres

Fig. 3—Test Probe

7708/1-1225/1

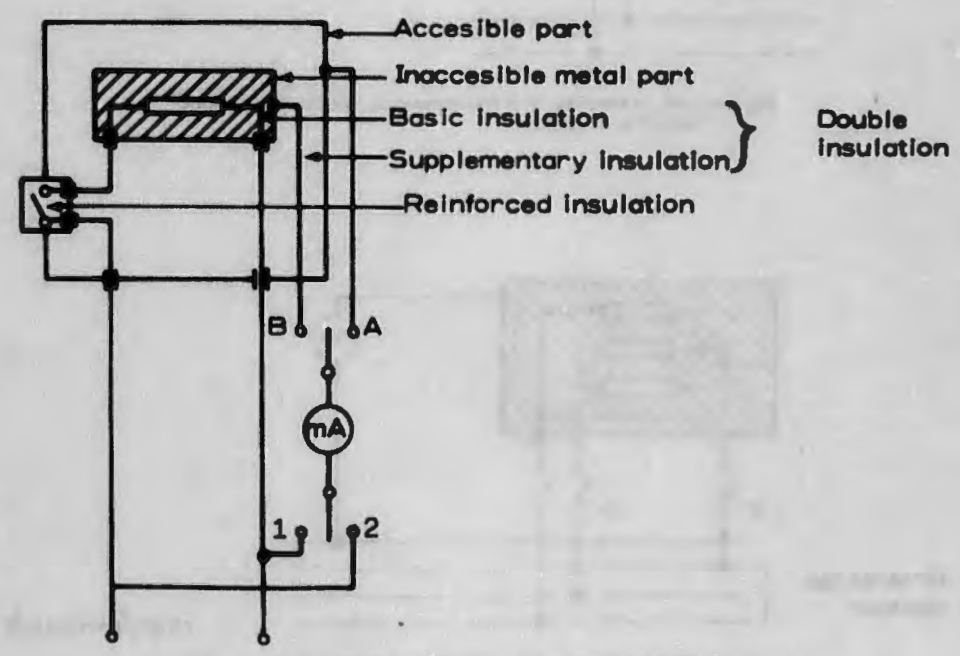

Fig. 4—Leakage Current Measurement at Operating Temperature: Connections for Single-Phase Class II Appliances

University of Fort Hare
Together in Excellence

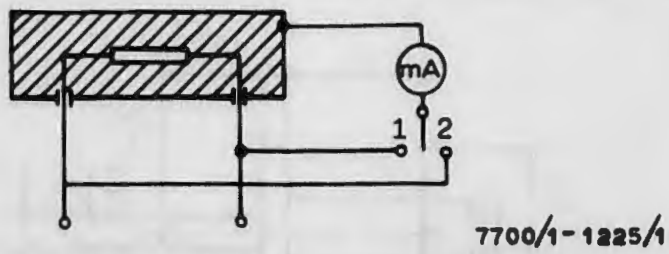

Fig. 5—Lekstroommeting by Werktemperatuur: Verbindings vir Enkelfasige Verbinding van Toestelle Uitgesonderd Klas II-toestelle

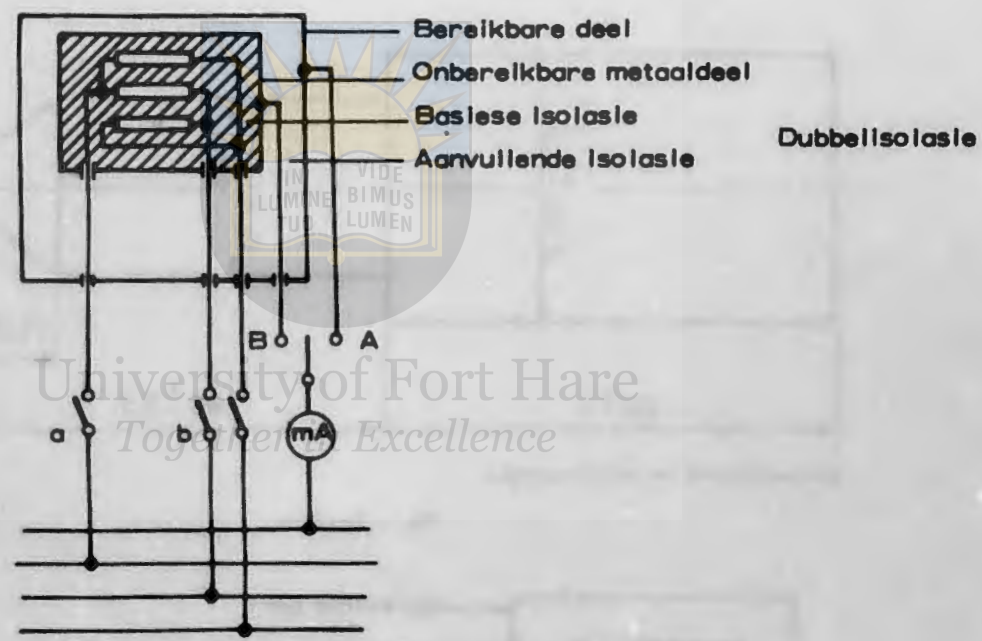

Fig. 6—Lekstroommeting by Werktemperatuur: Verbindings vir Driefasige Klas II-toestelle

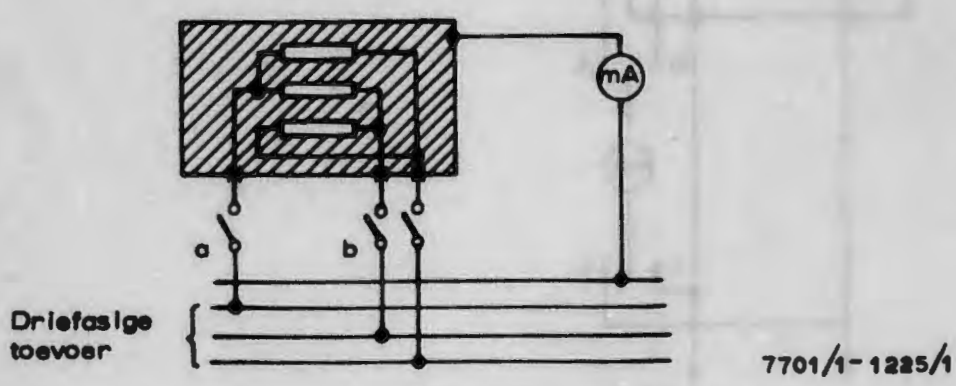

Fig. 7—Lekstroommeting by Werktemperatuur: Verbindings vir Driefasige Toestelle, uitgesonderd Klas II-toestelle

University of Fort Hare
Together in Excellence

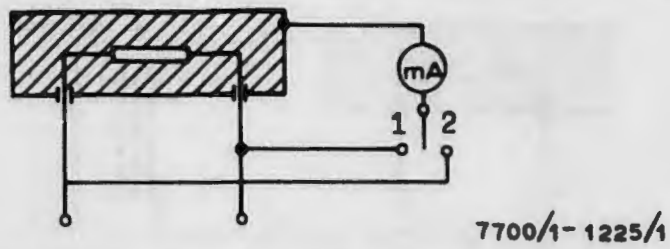

Fig. 5—Leakage Current Measurement at Operating Temperature: Connections for Single-Phase Connection of Appliances other than of Class II

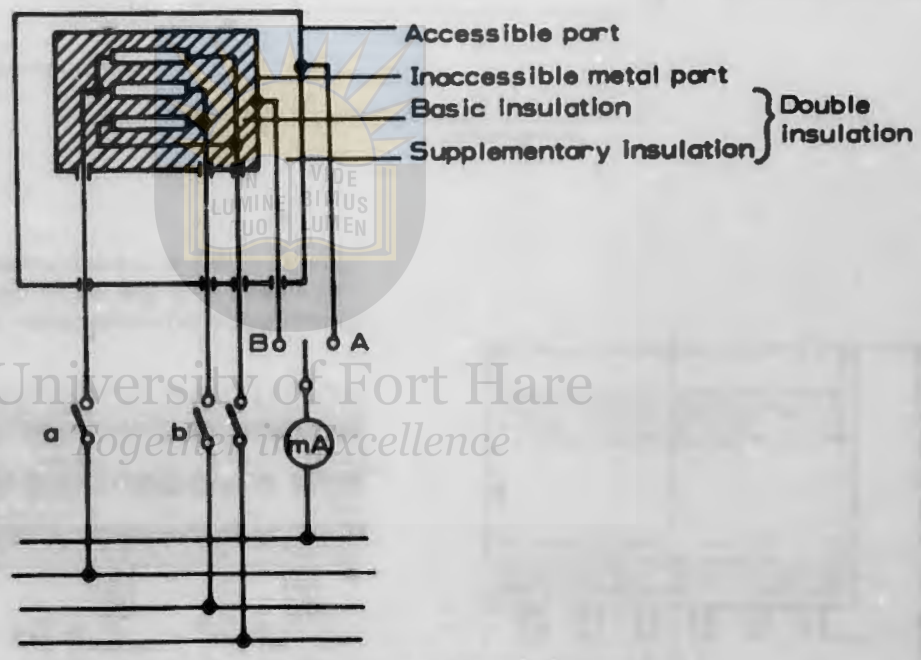

Fig. 6—Leakage Current Measurement at Operating Temperature: Connections for Three-Phase Class II Appliances

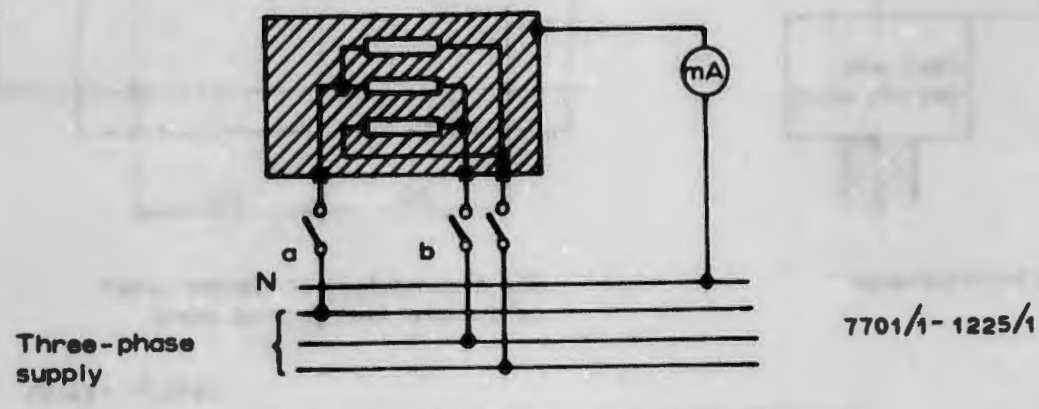

Fig. 7—Leakage Current Measurement at Operating Temperature: Connections for Three-Phase Appliances other than of Class II

University of Fort Hare
together in excellence

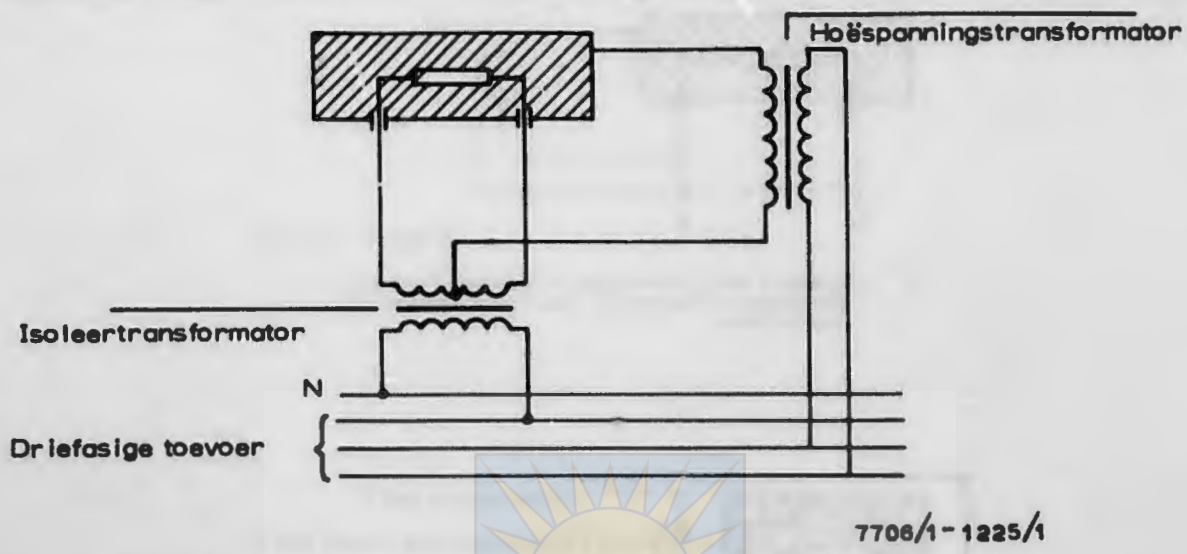

Fig. 8—Toets vir Elektriese Sterkte, by Werktemperatuur, vir Verhittingstoestelle

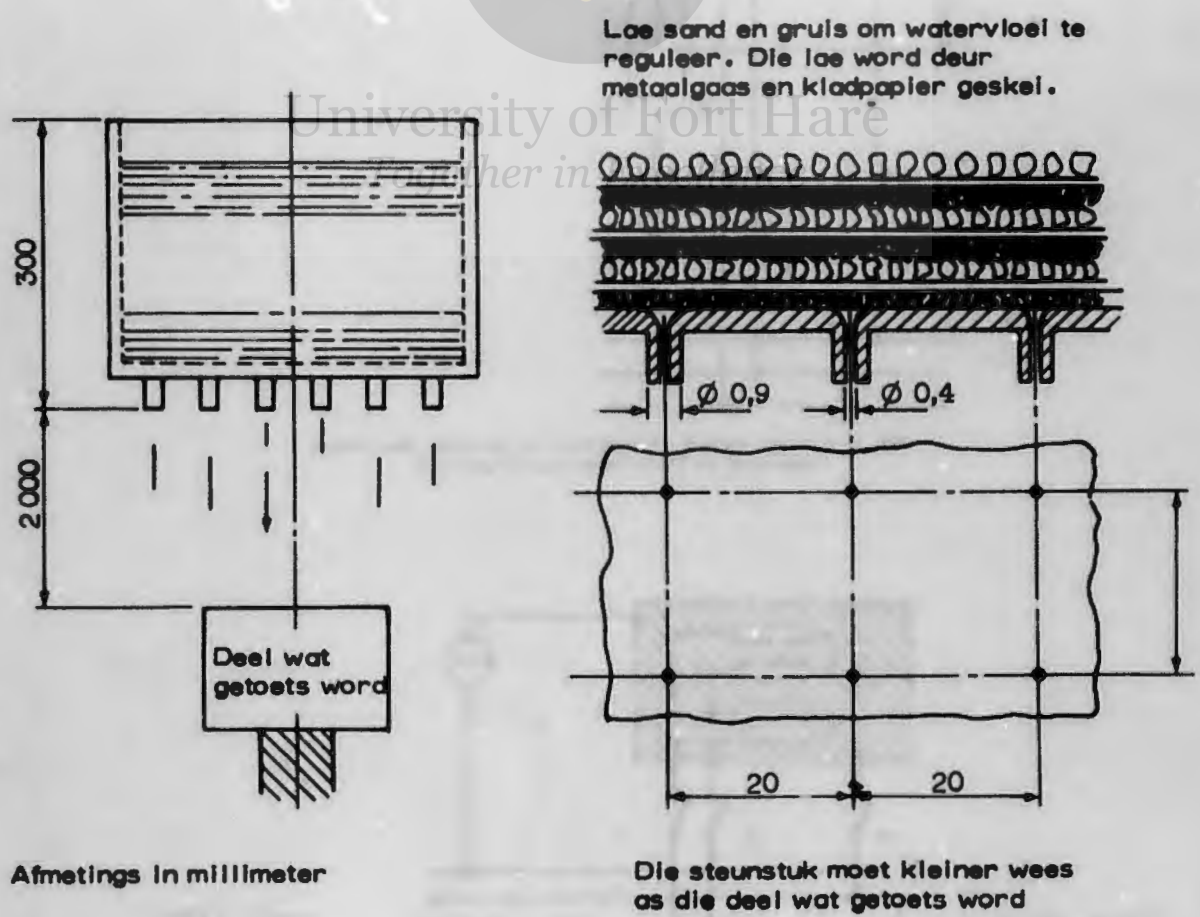

Fig. 9—Vertikale Rotnapparaat

University of Fort Hare
Together in Excellence

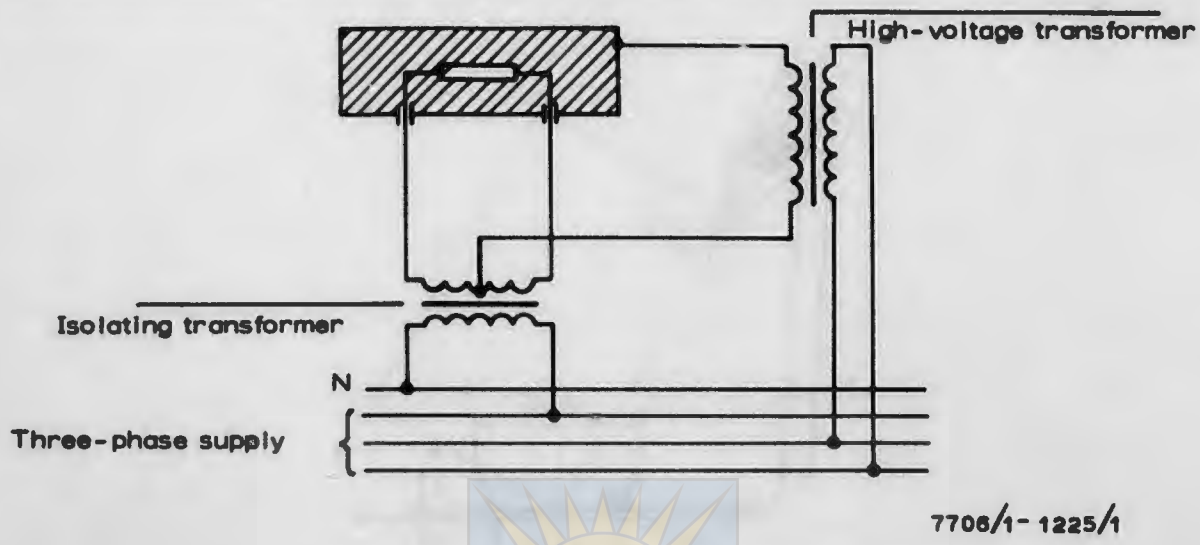

Fig. 8—Electric Strength Test at Operating Temperature for Heating Appliances

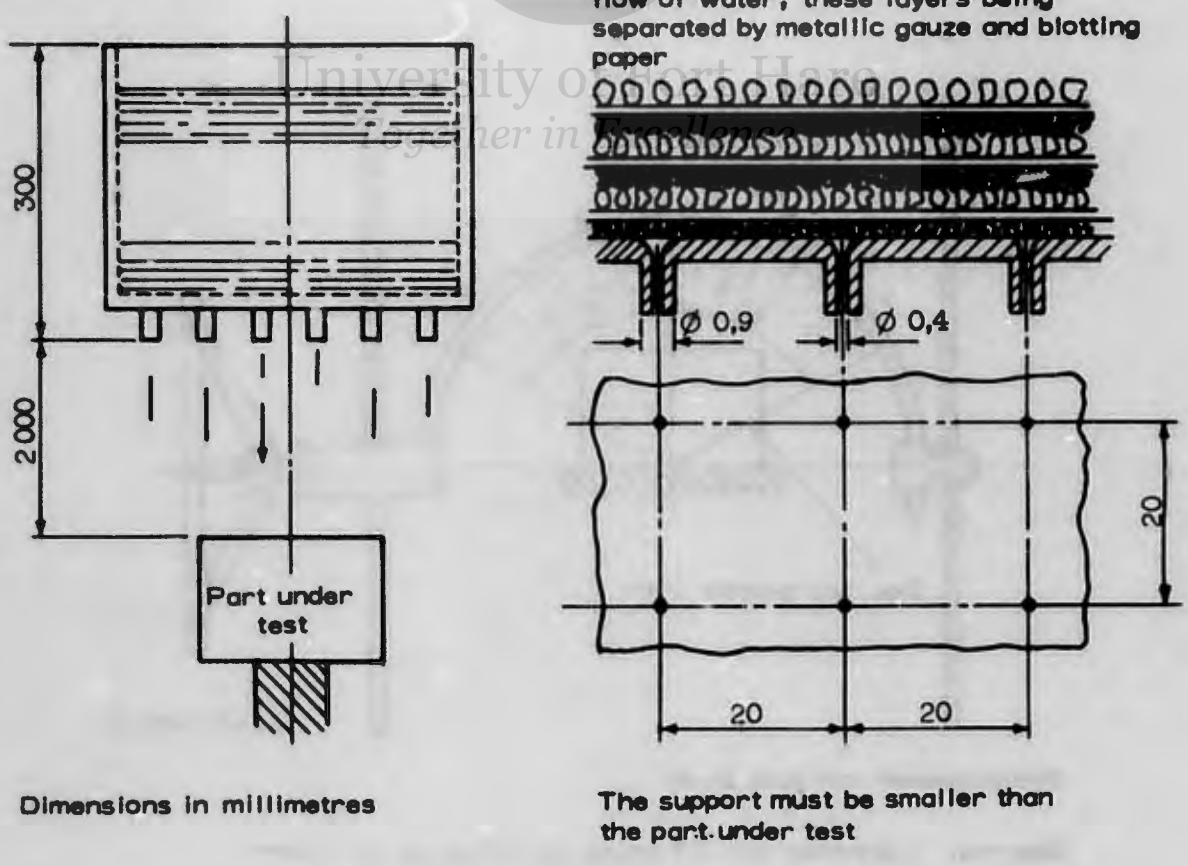

Fig. 9—Vertical Rain Apparatus

University of Fort Hare
Together in Excellence

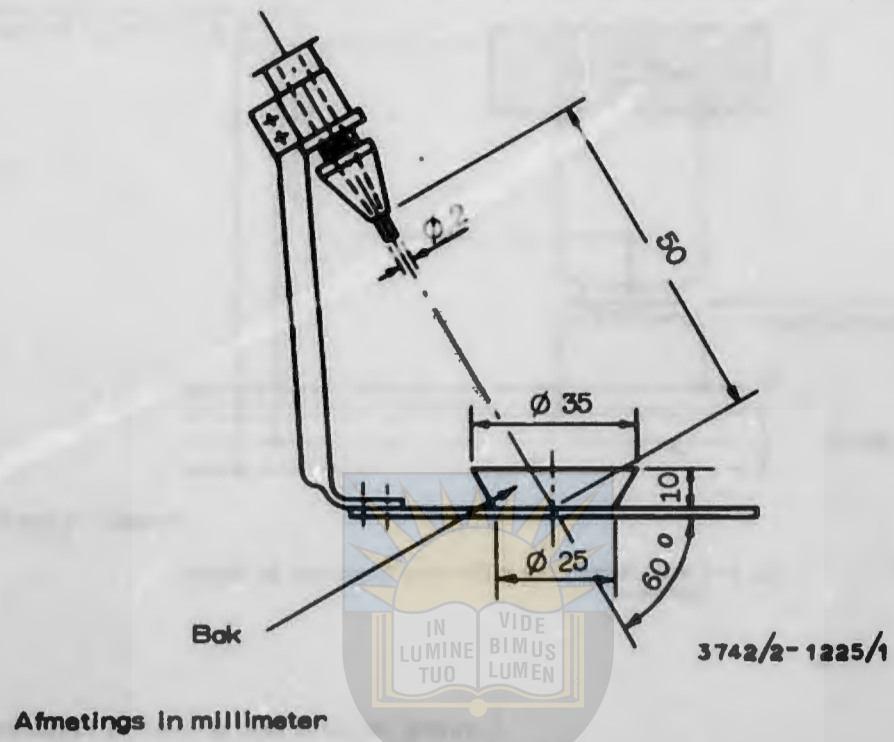

Afmetings in millimeter

Fig. 10—Spatapparaat

University of Fort Hare
Together in Excellence

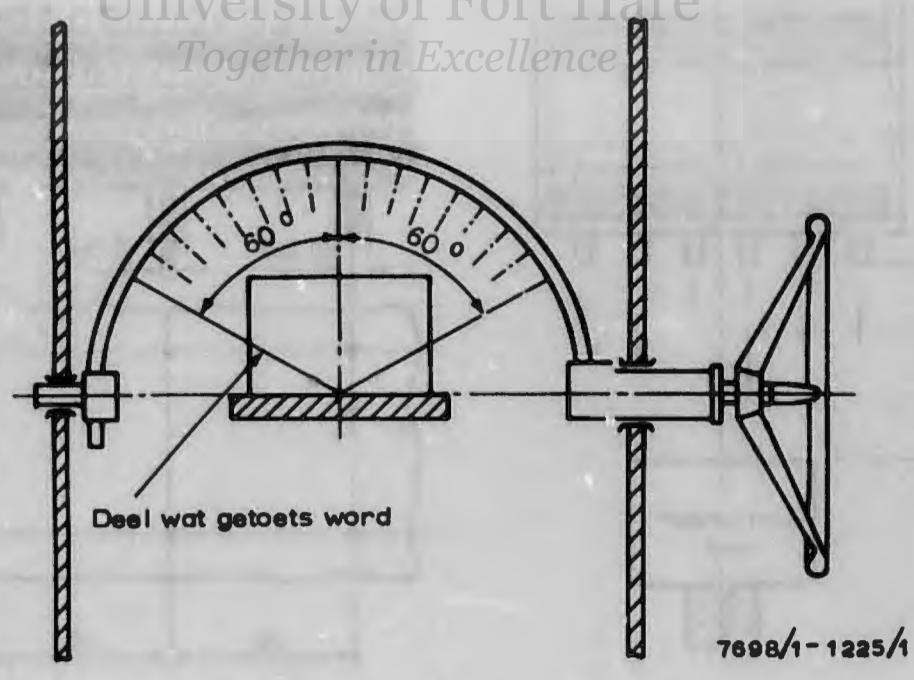

Binnediameter van buis 15 mm

Gate met 'n diameter van 0,4 mm op hartafstande van 50 mm deur muur aan konkawe kant van buiging wat 'n hoek van 60 ^{o} weerskante van die vertikaal onderspan

Fig. 11—Spuitapparaat

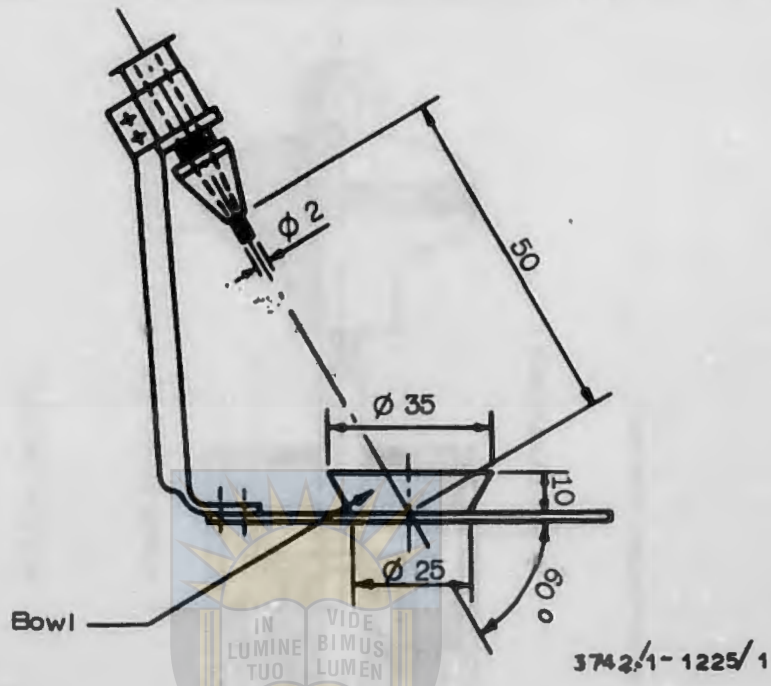

Dimensions in millimetres

Fig. 10—Splash Apparatus

University of Fort Hare
Together in Excellence

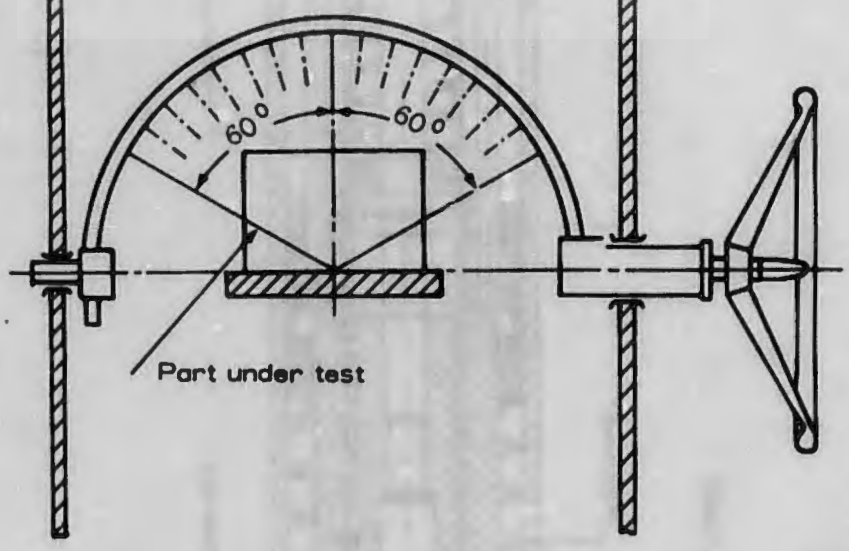

Inside diameter of tube 15 mm
Holes 0,4 mm in diameter at 50 mm centres through wall on concave side of bend subtending an angle of 60° on each side of the vertical

Fig. 11—Spray Apparatus

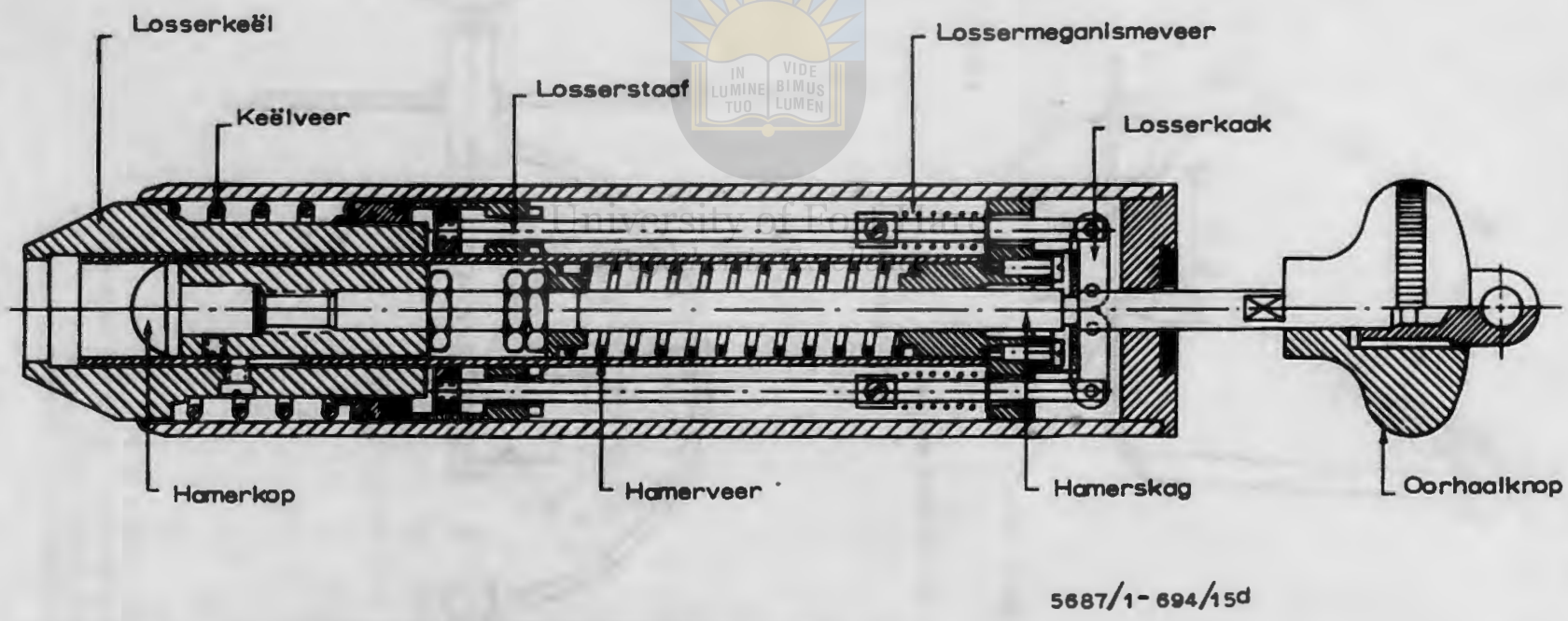

Fig. 12—Slagtoetsapparaat

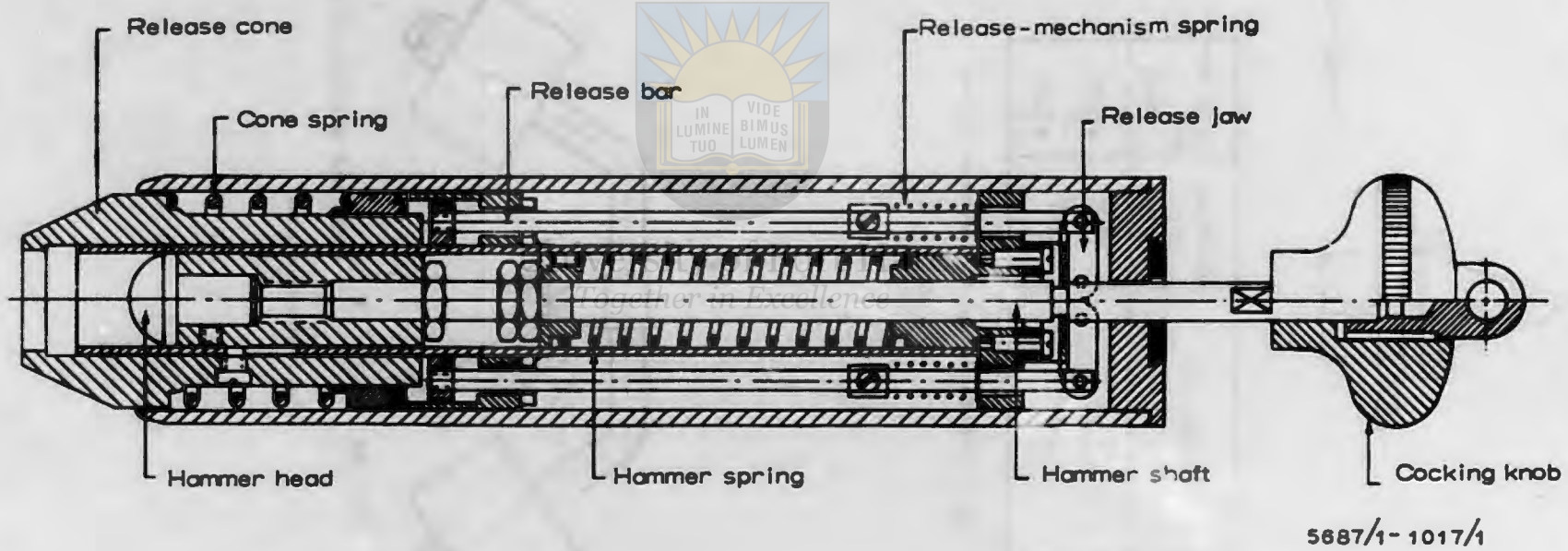

Fig. 12—Impact-Test Apparatus

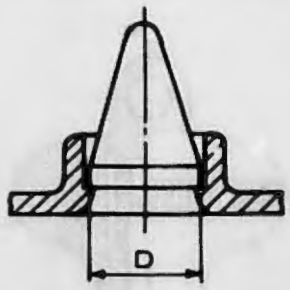

7705/1 - 1225/1

Grootte van leipyp	Diameter D (mm)	Toleransie (mm)
16	15,7	+0,2 -0
20	18,7	+0,2 -0

Fig. 13—Toestel om Skouers in Leipypinlate mee te Toets

University of Fort Hare
Together in Excellence

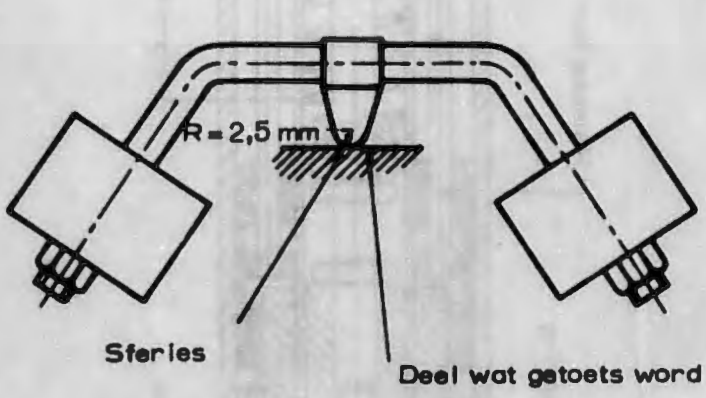

6658/1 - 1017/1

Fig. 14—Boldrukapparaat

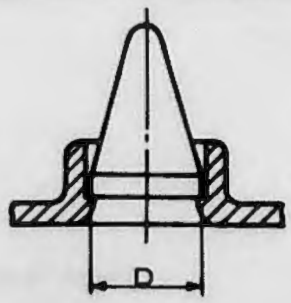

7705/1-1225/1

Size of conduit	Diameter D (mm)	Tolerance (mm)
16	15,7	+0,2 -0
20	18,7	+0,2 -0

Fig. 13—Device for Testing Shoulders in Conduit Entries

University of Fort Hare
Together in Excellence

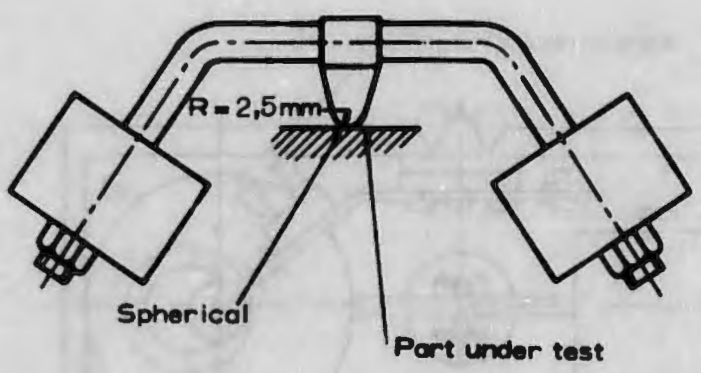

6658/1-1017/1

Fig. 14—Ball-Pressure Apparatus

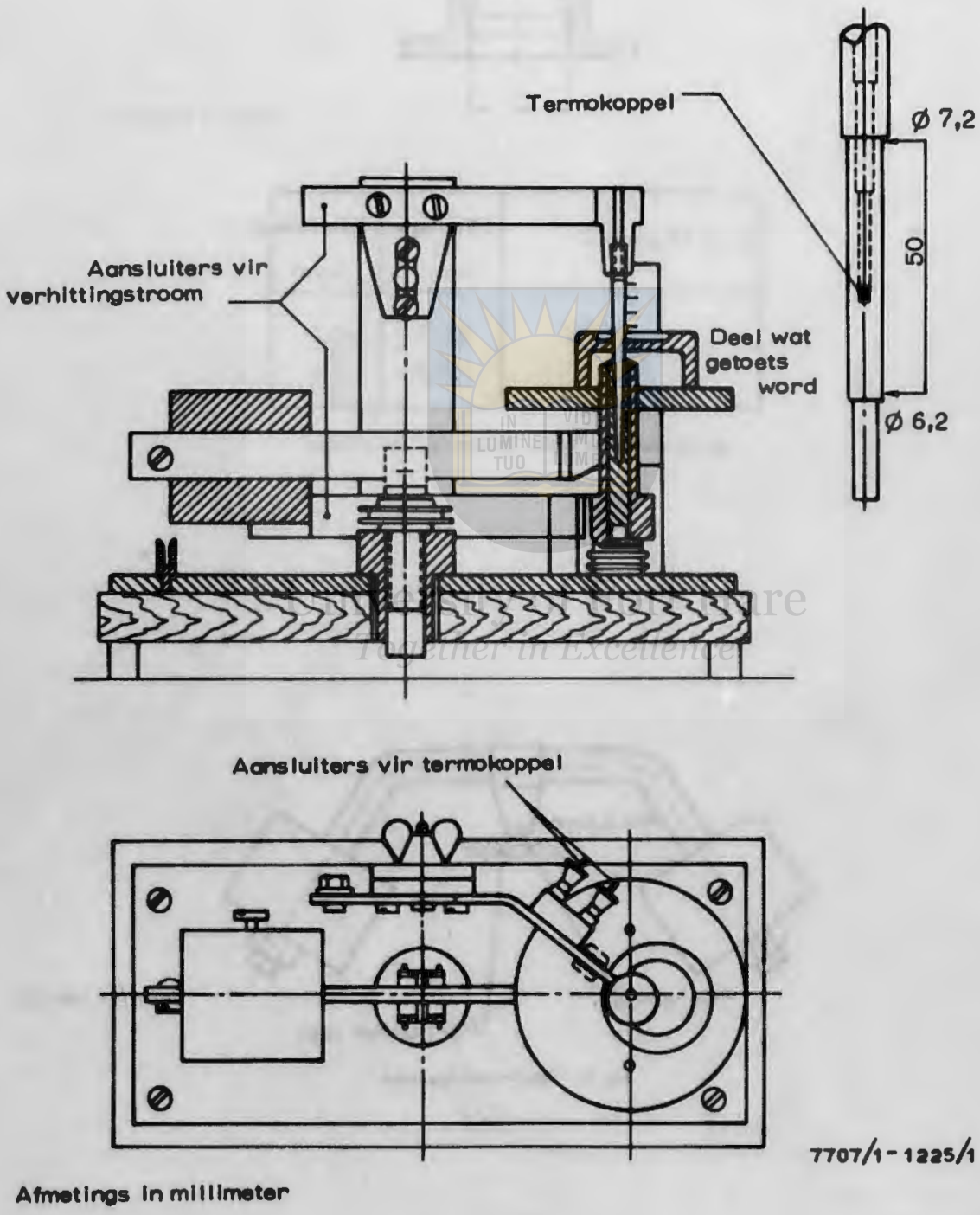

Fig. 15—Warm Spilapparaat

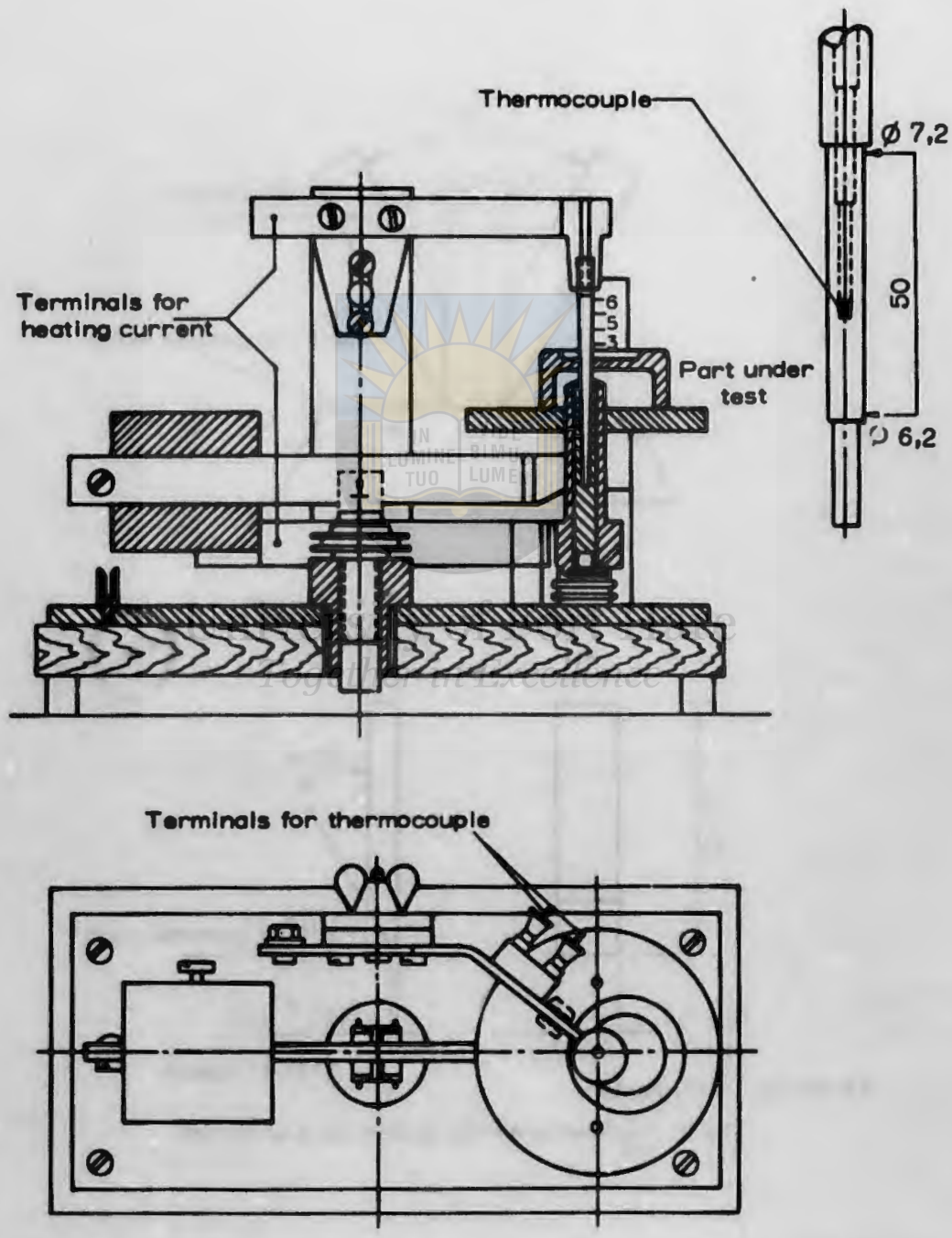

Fig. 15—Hot Mandrel Apparatus

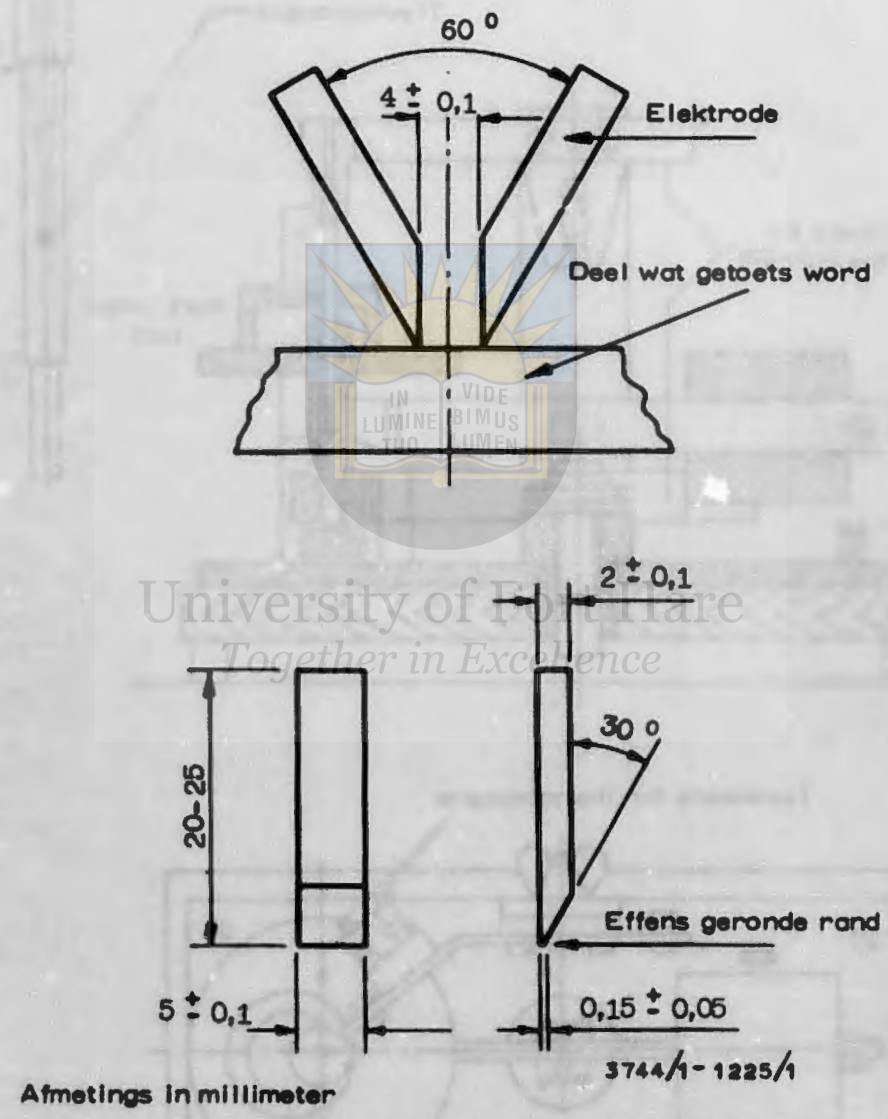

Fig. 16—Rangskikking en Afmetings van Elektrodes vir Spoorvormingstoets

University of Fort Hare
Together in Excellence

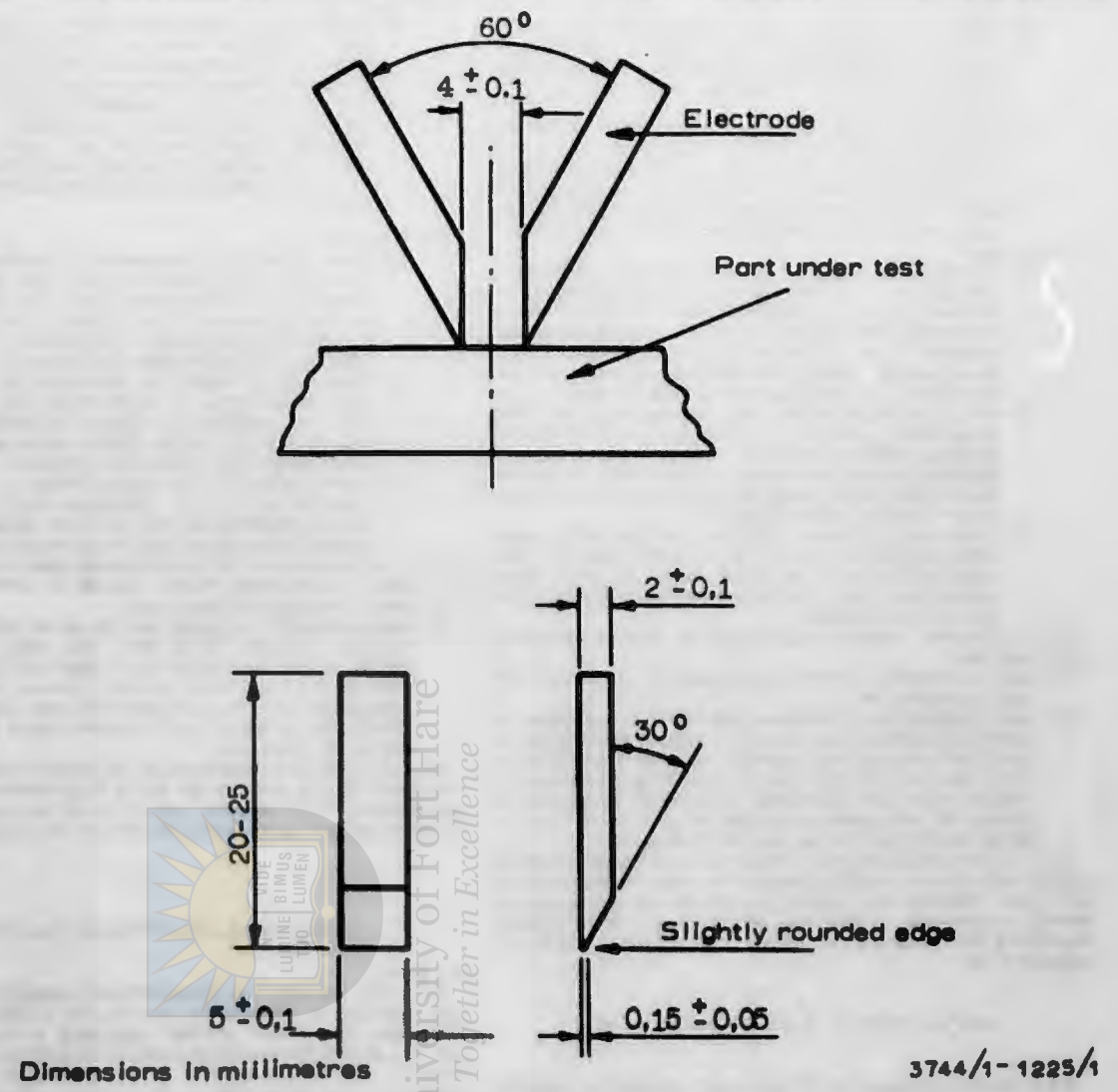

Fig. 16—Arrangement and Dimensions of the Electrodes for the Tracking Test

University of Fort Hare
Together in Excellence

AANHANGSEL A. TERMIESE KONTROLE

A-1 Die skal- en-breekvermoë van 'n termostaat en 'n temperatuurbegrenser moet sodanig wees dat, wanneer dit aan die toepaslike toets(e) in A-1.1 onderwerp word, daar geen volgehoue oorvonking is nie en dat, na afloop van die toepaslike toets(e),

(a) daar geen teken van beskadiging is wat aan die verdere gebruik daarvan afbreuk doen nie;

(b) elektriese verbindings nie losgeraak het nie; en

(c) 'n termostaat sonder oorvonking of deurslag 'n toets vir elektriese sterkte soos gespesifiseer in 16.1.3 deurstaan, maar die toetsspanning vir die isolasie tussen die kontakte moet twee maal die spanning wees wat aangelê is toe die toestel teen die aangedane spanning of, indien toepaslik, by die boonste grens van die aangedane spanningsbestek gewerk het.

A-1.1 *Toets*

(a) *Toestandes*

(1) In die geval van 'n toestel met 'n termostaat of temperatuurbegrenser met 'n T-merk, toets soos in 3 hieronder.

(2) Die skakelfrekwensie van die termostaat kan verhoog word tot bo die normale skakelfrekwensie wat in die toestel voorkom, mits dit nie aan die vermoë daarvan afbreuk sal doen nie.

ANNEXURE A. THERMAL CONTROLS

A-1 The making-and-breaking capacity of a thermostat and a temperature limiter shall be such that, when subjected to the applicable test(s) given in A-1.1, no sustained arcing occurs and, after the completion of the relevant test(s),

(a) there is no sign of damage that impairs its further use;

(b) electrical connections shall not have worked loose; and

(c) a thermostat shall withstand, without the occurrence of flashover or breakdown, an electric strength test as specified in 16.1.3, except that the test voltage for the insulation between the contacts shall be twice the voltage applied when the appliance is operated at rated voltage or, when relevant, at the upper limit of the rated voltage range.

A-1.1 *Test*

(a) *Test conditions*

(1) In the case of an appliance that has a thermostat or temperature limiter that is T-marked, test as in (3) below.

(2) The switching frequency of the thermostat may be increased above the normal switching frequency that occurs in the appliance, provided that this will not impair its capabilities.

(3) Indien 'n termostaat of temperatuurbegrenser 'n T-merk het, toets een toestel terwyl die skakeldeel by kamertemperatuur is en nog twee identiese toestelle terwyl die skakeldeel by die maksimum werktemperatuur is wat op die T-merk aangegee word.

(4) Toets 'n termostaat of temperatuurbegrenser waarop die afsonderlike aanslagwaarde(s) nie aangebring is nie, terwyl dit in die toestel is of afsonderlik, wat ook al die gerieflikste is, en tensy daar anders in die spesifieke vereistes gespesifiseer is, in toetstoestande wat soortgelyk is aan die toestande wat tydens normale gebruik in die toestel voorkom

(b) Prosedure

(1) Veroorsaak op termiese wyse dat 'n termostaat 200 werksiklusse uitvoer, d.w.s. 200 sluit- en 200 breekwerkings, in die toestande wat heers in die toestel wanneer laasgenoemde by 'n spanning werk wat gelyk is aan 1,1 maal die aangeslane spanning of aan 1,1 maal die boonste grens van die aangeslane spanningsbestek, soos toepaslik, en onder die ongunstigste las wat tydens normale gebruik voorkom.

(2) Veroorsaak dan op termiese wyse dat die termostaat 10 000 werksiklusse uitvoer, d.w.s. 10 000 sluit- en 10 000 breekwerkings, in die toestande wat in die toestel heers wanneer laasgenoemde teen aangeslane spanning werk of teen die boonste grens van die aangeslane spanningsbestek, soos toepaslik, en onder normale belasting.

(3) Veroorsaak op termiese wyse dat 'n temperatuurbegrenser 1 000 werksiklusse uitvoer, d.w.s. 1 000 sluit- en 1 000 breekwerkings, in die toestande wat in die toestel heers wanneer dit by die maksimum aangeslane spanning onder normale belasting werk.

A-1.2 'n Termiese uitskakelaar of oorlaslosser moet so in werking gestel word dat—

(a) nadat 'n selfherstel- termiese uitskakelaar of oorlaslosser 200 maal laat werk is, en

(b) nadat 'n nie-selfherstel- termiese uitskakelaar of oorlaslosser 10 maal in werking gestel is, en na elke werking weer ingestel is, terwyl die toestel in die toepaslike toestande gespesifiseer in 19.1.1 werk en, indien dit nodig is, waar skade aan die toestel voorkom word deur geforseerde afkoeling en rustydperke te gebruik, die uitskakelaar of oorlaslosser geen skade toon wat aan die verdere gebruik daarvan afbreuk doen nie.

A-1.3 'n Termostaat, termiese uitskakelaar of oorlaslosser moet so gemaak wees dat die instelling daarvan nie waarneembaar verander word deur toestande soos verhitting of vibrasie wat tydens gewone gebruik voorkom nie, en daar mag geen teken van enige sodanige verandering wees gedurende die toepaslike toetse wat in afdeling 19 aangegee is nie.

AANHANGSEL B—ELEKTRONIESE BANE

B-1 Bestek

B-1.1 Hierdie aanhangsel bevat bykomende vereistes en bepalings wat geld op toestelle wat deur hierdie spesifikasie gedek word en wat een of meer bane insluit wat 'n elektroniese inrigting, eenheid of samestel bevat met komponente soos resistors, kapasitors en induktors. Al die vereistes van die spesifikasie geld vir sodanige toestelle, behalwe soos gewysig deur hierdie aanhangsel en in die spesifikasie.

B-2 Woordbepaling

B-2.1 Die volgende woordbepalings geld benewens die toepaslike woordbepalings in 2.2:

Elektroniese inrigting. 'n Komponent waarin geleiding hoofsaaklik deur elektrone is wat deur 'n vakuum, gas of halfgeleier beweeg.

Elektroniese eenheid. 'n Groep komponente, waarvan minstens een 'n elektroniese inrigting is, waarin die komponente nie sonder skade vervang kan word nie; bv. 'n integrerende baan.

Elektroniese samestel. 'n Groep komponente waarvan minstens een 'n elektroniese inrigting is, maar waarin afsonderlike komponente sonder beskadiging van die samestel vervang kan word; bv. komponente wat op 'n bedruktestroombaanbord gemonteer is.

B-3 Algemene Opmerkings oor Toetse

B-3.1 Daar moet verseker word dat die toevoer vry van netgedraagde steurings is.

B-3.2 Indien 'n elektroniese eenheid so omhul is dat die toets van afsonderlike komponente onmoontlik is, moet die hele elektroniese eenheid as geheel oorweeg word.

Elektroniese eenhede wat nie so vakuumverseël is, heeltemal ingekapsel, ingevorm of gepot is dat die omhulsel 'n gevormde deel met die omhulde komponente uitmaak nie, kan uitmekaargehaal word ten einde vas te stel wat die kruipafstande en vry ruimtes tussen lewendige dele en ander metaaldele gespesifiseer in 29.1 is.

B-3.3 Indien 'n elektroniese eenheid of samestel nie saam met 'n toestel getoets word nie, moet die toestande van hitteverspreiding wat

(3) If a thermostat or temperature limiter is T-marked, test one appliance with the switch part at room temperature, and a further two identical appliances with the switch part at the maximum operating temperature given in the T-marking.

(4) Test a thermostat or temperature limiter not marked with individual rating(s) while in the appliance or separately, whichever is more convenient, and unless otherwise specified in the specific requirements under test conditions similar to the conditions occurring in the appliance during normal use.

(b) Procedure

(1) Cause, thermally, a thermostat to perform 200 cycles of operation, i.e. 200 makes and 200 breaks, under the conditions prevailing in the appliance when the latter is operated at a voltage equal to 1,1 times rated voltage or to 1,1 times the upper limit of the rated voltage range, as relevant, and under the most unfavourable load occurring in normal use.

(2) Then cause, thermally, the thermostat to perform 10 000 cycles of operation, i.e. 10 000 makes and 10 000 breaks, under the conditions prevailing in the appliance when the latter is operated at rated voltage or at the upper limit of the rated voltage range, as relevant, and under normal load.

(3) Cause, thermally, a temperature limiter to perform 1 000 cycles of operation, i.e. 1 000 makes and 1 000 breaks, under the conditions that prevail in the appliance when it is operated at maximum rated voltage under normal load.

A-1.2 A thermal cut-out or overload release shall so operate that—

(a) after a self-resetting thermal cut-out or overload release is caused to operate 200 times, and

(b) after a non-self-resetting thermal cut-out or overload release is operated 10 times, being reset after each operation, the appliance being operated under the appropriate conditions specified in 19.1.1 and, when necessary, damage to the appliance being prevented by the introduction of forced cooling and resting periods, the cut-out or overload release shows no damage that impairs its further use.

A-1.3 A thermostat, thermal cut-out, or overload release shall be so constructed that its setting is not changed appreciably by conditions such as heating or vibration that occur in normal use, and there shall be no sign of any such change during the relevant tests given in section 19.

ANNEXURE B—ELECTRONIC CIRCUITS

B-1 Scope

B-1.1 This annexure lays down additional requirements and provisions applicable to appliances covered by this specification, and that incorporate one or more circuit(s) comprising an electronic device, unit, or assembly that has components such as resistors, capacitors, and inductors. All the requirements of the specification apply to such appliances except as modified in this annexure and in the specific requirements.

B-2 Definitions

B-2.1 The following definitions shall apply in addition to the relevant definitions given in 2.2:

Electronic device. A component in which conduction is principally by electrons that move through a vacuum, gas, or semi-conductor.

Electronic unit. A group of components, at least one of which is an electronic device, in which the components cannot be replaced without damage; for example, an integrated circuit.

Electronic assembly. A group of components at least one of which is an electronic device, but in which individual components may be replaced without damage to the assembly; for example, components mounted on a printed circuit board.

B-3. General Notes on Tests

B-3.1 Care shall be taken to ensure that the supply is free from mains-borne perturbations.

B-3.2 If an electronic unit is so enclosed that the testing of individual components is impossible, then the entire electronic unit shall be considered as a whole.

Electronic units that are not so vacuum sealed, completely encapsulated, moulded-in, or potted that the enclosure forms one moulded part with the enclosed components, may be taken apart for the purpose of establishing the creepage distances and clearances between live parts and other metal parts specified in 29.1.

B-3.3 If an electronic unit or assembly is tested separately from an appliance, the conditions of heat dissipation that occur when it is incor-

University of Fort Hare
Excellence

voorkom wanneer dit in die toestel is, gedurende die toetse nagebootsword, indien dit nodig is.

B-3.4 Alle metings moet gedoen word met instrumente wat—

(a) die waardes wat gemeet word, nie in so 'n mate beinvloed dat nie-voldoening aan die vereistes van hierdie spesifikasie veroorsaak word nie, en

(b) nie deur faktore soos die golfvorm beinvloed word nie.

B-3.5 Kumulatiewe spanning as gevolg van opeenvolgende toetse moet vermy word.

B-4 Merke en Etikettering

B-4.1 'n Klas I-toestel met 'n elektroniese baan wat sodanig is dat faling van basiese isolasie aardlekstrome met 'n ws-komponent van meer as 30 mA en ook van meer as 60% van die totale aardlekstroom toelaat, moet vergesel wees van 'n aanwysingsblaadjie waarin die nodige besonderhede oor die beveiliging van die bedrading deur sekerings of aardlekbaanbrekers verstrek word.

B-5 Beveiliging teen Elektriese Skok

B-5.1 Bedradingsaansluiters en kontakte van verbinders word nie, wat die vereistes van 8.1 betref, as lewendige dele beskou nie, indien—

(a) die komponent met die leweringsaansluiters van 'n veiligheidsisoleertransformator verbind is, mits die leweringspanning van die transformator nie 42,4 V oorskry nie, d.w.s. die spitswaarde in die geval van ws;

(b) die stroom tussen die komponent en enige pool van die toevoerbron deur 'n nie-induktiewe weerstand van 2 000 ± 100 Ω nie 'n ws-spitswaarde van 0,7 mA of, in die geval van gs, 2 mA oorskry nie;

(c) die kapasitansie nie 0,1 μF vir ws-spannings met 'n spitswaarde van 42,4 V-450 V oorskry nie; en

(d) die ontlading nie 45 μC vir ws-spannings met 'n spitswaarde van 450 V-15 kV oorskry nie;

(e) die energie van die ontlading nie 350 mJ vir ws-spannings met 'n spitswaarde van meer as 15 kV oorskry nie.

B-5.2 By die uitvoer van die toets in 8.1.1, meet spannings en strome tussen die toepaslike elektroniese komponent en enige pool van die toevoerbron, met gebruik van 'n voltmeter met 'n binneweerstand van minstens 50 kΩ. Meet ontladings onmiddellik nadat die toevoer onderbreek is.

In die aanwesigheid van bofrekwensies en frekwensies wat hoër is as die toevoerfrekwensies, moet die meting van ws-lekstroom gemaak word met 'n baan met 'n impedansie wat gevorm word deur 'n resistiewe komponent van 2 000 ± 100 Ω, met inbegrip van die weerstand van die meetinstrument, ongetak deur 'n kapasitor van 112 ± 6 nF. In die geval van frekwensies wat 1 kHz oorskry, word die spitswaardegrens van 0,7 mA vermenigvuldig met die waarde van die frekwensie in kHz, maar dit moet nie 'n spitswaarde van 70 mA oorskry nie.

B-6 Isolasieweerstand en Elektriese Sterkte

B-6.1 By die uitvoer van die toetse gespesifiseer in 16.1.1, 16.1.2 en 16.1.3, moet oorbeklemtoning van die komponente van elektroniese inrigtings, eenhede of samestelle wat gerangskik is oor isolasie wat aan die toetse vir elektriese sterkte en isolasieweerstand onderwerp moet word, vermy word deur die komponente te diskonnekteer of, indien hulle nie gediskonnekteer kan word nie of nie volgens B-5.1 as lewendig beskou kan word nie, deur die toepaslike dele van die toetse weg te laat.

Hierbenewens moet, voor die uitvoer van enige van die toetse, enige integrerende baan of soortgelyke elektroniese inrigting waarin die komponente nie sonder skade vervang kan word nie en wat aan die sekondêre kant van 'n isoleertransformator is, uitgehaal of gediskonnekteer word indien daar enige risiko is dat hulle deur kapasitiewe ladings of strome beskadig of vernietig kan word.

Indien daar gedurende die toets in 16.1.3 oorvonking of deurslag is oor isolasie wat aan die vereistes van B-8.1 gedurende die toets in B-8.1.1 *(a)* (2) voldoen het, moet daar nie geag word dat die toestel nie in die toets geslaag het nie.

B-7 Uithouvermoë

B-7.1 Indien 'n toestel gedurende enige van die toetse in 18.1.1-18.1.4 ophou funksioneer as gevolg van faling van 'n elektroniese inrigting, elektroniese eenheid of enige ander komponent en die faling nie enige gevaartoestand soos gespesifiseer in B-8.1 veroorsaak nie, vervang die komponent, elektroniese eenheid of elektroniese inrigting, soos toepaslik, en gaan voort met die toets.

Indien 'n toestel boonop gedurende enige van die toetse 'n fout ontwikkel wat tot wanfunksie lei, gaan voort met die toets sonder om die komponent, elektroniese inrigting of elektroniese eenheid, soos toepaslik, te vervang, mits geen gevaartoestand soos gespesifiseer in B-8.1 geskep is nie.

B-8 Abnormale Werking

B-8.1 Elektroniese bane moet so ontwerp en gebruik word dat geen fouttoestand 'n toestel onveilig maak wat betref elektriese skok,

porated in the appliance shall, if necessary, be simulated during the tests.

B-3.4 All measurements shall be carried out with instruments that—

(a) do not so affect the values to be measured as to cause non-compliance with the requirements of this specification, and

(b) are not affected by factors such as waveform.

B-3.5 Cumulative stress as a result of sequential testing shall be avoided.

B-4. Marking and Labelling

B-4.1 A Class I appliance with an electronic circuit such that a failure of basic insulation would permit earth leakage currents with a d.c. component exceeding 30 mA and also exceeding 60% of the total earth-leakage current shall be accompanied by an instruction sheet giving the necessary information with regard to the protection of the wiring by fuses or earth-leakage circuit breakers.

B-5 Protection Against Electric Shock

B-5.1 Wiring terminals and contacts of connectors shall not, in respect of the requirements of 8.1, be regarded as live parts if—

(a) the component is connected to the output terminals of a safety isolating transformer, provided that the output voltage of the transformer does not exceed 42,4 V, this being the peak value in the case of A.C;

(b) the current between the component and either pole of the supply source through a non-inductive resistance of 2 000 ± 100 Ω does not exceed an A.C. peak value of 0,7 mA or, in the case of D.C., 2 mA;

(c) the capacitance does not exceed 0,1 μF for a.c. voltages of peak value 42,4 V-450 V; and

(d) the discharge does not exceed 45 μC for a.c. voltages of peak value 450 V-15 kV;

(e) the energy of the discharge does not exceed 350 mJ for a.c. voltages of peak value exceeding 15 kV.

B-5.2 When conducting the test given in 8.1.1, measure voltages and currents between the relevant electronic component and either pole of the supply source, using a voltmeter having an internal resistance of at least 50 kΩ. Measure discharges immediately after the interruption of the supply.

In the presence of harmonics and frequencies higher than supply frequencies, the measurement of the a.c. leakage current shall be made with a circuit having an impedance formed by a 2 000 ± 100 Ω resistive component, including the resistance of the measuring instrument, shunted by a capacitor of 112 ± 6 nF. For frequencies exceeding 1 kHz the peak value limit of 0,7 mA is multiplied by the value of the frequency in kHz, but must not exceed a peak value of 70 mA.

B-6 Insulation Resistance and Electric Strength

B-6.1 When conducting the tests specified in 16.1.1, 16.1.2, and 16.1.3, avoid overstressing of the components of electronic devices, units or assemblies arranged across insulation required to be tested for electric strength and insulation resistance by disconnecting the components, or, if they cannot be disconnected or are not, in terms of B-5.1, regarded as live, by omitting the relevant parts of the tests.

In addition, before conducting any of the tests, remove or disconnect any integrated circuit or similar electronic device in which the components cannot be replaced without damage and that are on the secondary side of an isolating transformer if there is any risk of their being damaged or destroyed by capacitive charges or currents.

If, during the test given in 16.1.3, a flashover or breakdown occurs over an insulation complying with the requirements of B-8.1 during the test given in B-8.1.1 *(a)* (2), the appliance shall not be considered to have failed the test.

B-7 Endurance

B-7.1 If during any of the tests given in 18.1.1-18.1.4, an appliance ceases to function as the result of a failure of an electronic device, electronic unit, or any other component and the failure does not cause any hazardous condition as specified in B-8.1, replace the component, electronic unit, or electronic device, as relevant, and continue the test.

Further, if during any of the tests, an appliance develops a fault which produces a malfunction, continue the test without replacement of the component, electronic device or electronic unit as relevant, provided that no hazardous condition as specified in B-8.1 has been produced.

B-8 Abnormal Operation

B-8.1 Electronic circuits shall be so designed and applied that any fault condition will not render an appliance unsafe as regards electric

brandgevaar, meganiese gevare of ernstige wanfunksie nie. Gedurende sowel as na afloop van die toetse in B-8.1.1 moet die toestel aan die vereistes van 19.1 *(a)* en *(b)* van hierdie spesifikasie voldoen.

B-8.1.1 *Toets*

(a) *Toetstoestande.* Voer die toets uit in die toepaslike fouttoestande gespesifiseer in (1), (2) en (3) hieronder wat om die beurt nagebootsword en verband hou met sodanige ander fouttoestande wat 'n gevolg van die aanvanklike fout sal wees, soos geblyk het uit die ondersoek van die toestel en sy baandiagram:

(1) Indien die kruipafstande en vry ruimtes tussen lewendige dele van verskillende polariteit wat nie behoorlik ingekapsel is nie, minder is as dié in B-9 gespesifiseer, kortsluit die lewendige dele.

(2) Kortsluit oor isoleerdele wat nie aan die vereistes van B-6 voldoen nie.

(3) Kortsluit oor of, indien toepaslik, verbreek die baan van elektroniese inrigtings, elektroniese eenhede en komponente soos resistors, kapasitors en induktors.

(b) *Prosedure.* Laat die toestel in die ongunstigste normale werktoestande in 11.1.1 *(a)* werk by aangeslane spanning of by die ongunstigste spanning van die aangeslane spanningsbestek, soos toepaslik, vir die toepaslike werktyd in 11.1.1 *(a)* (12) gespesifiseer, maar in die geval van 'n toestel vir onderbroke werking, vir slegs een werksiklus.

B-9 KRUIPAFSTANDE, VRY RUIMTES EN AFSTANDE DEUR ISOLASIE

B-9.1 Bane wat geleidend verbind is met die toevoeraansluiters of met toevoerkontakte moet aan die vereistes van 29.1 en 29.2 voldoen. Hierbenewens moet kruipafstande en vry ruimtes in bane wat deur 'n veiligheidsisoleertransformator van die toevoer geskei is,

(a) minstens die toepaslike waardes in kolom 3 en 4 van tabel B-1 wees in die geval van—

(1) basiese isolasie tussen lewendige dele van verskillende polariteit;

(2) die isolasie tussen lewendige dele en

(i) nie-bereikbare dele in 'n klas II-toestel,

(ii) bereikbare dele in ander toestelle;

(3) aanvullende isolasie;

(b) nie minder as twee maal die toepaslike waardes in kolom 3 en kolom 4 van tabel B-1 in die geval van versterkte isolasie wees nie.

TABEL B-1—KRUIPAFSTANDE EN VRY RUIMTES

1	2	3	4
Werkspanning		Vry ruimte, mm, min.	Kruipafstande, mm, min.
w.g.k., V	Spits, V		
V ≤ 12	V ≤ 17	0,19	0,40
12 < V ≤ 30	17 < V ≤ 43	0,28	0,55
30 < V ≤ 60	43 < V ≤ 85	0,38	0,72
60 < V ≤ 130	85 < V ≤ 184	0,62	1,12
130 < V ≤ 250	184 < V ≤ 354	1,15	1,95

B-10 WERKING TYDENS NETGEDRAAGDE STEURING

B-10.1 Enige wanfunksie van 'n elektroniese kontrole of elektroniese kontrolestelsel as gevolg van netgedraagde steurings mag nie sodanig wees dat dit tot besering van persone of beskadiging van die omgewing kan lei nie.

AANHANGSEL C. KONSTRUKSIE VAN VEILIGHEIDS-ISOLEERTRANSFORMATORS

C-1 Die konstruksie van 'n veiligheidsisoleertransformator moet aan die vereistes van C-1.1 tot en met C-1.3 voldoen.

C-1.1 Die ingangswikkelings en uitgangswikkelings moet deur 'n isoleerversperring geskei wees en die konstruksie moet sodanig wees dat daar geen moontlikheid van enige verbinding, regstreeks of onregstreeks, tussen hierdie wikkelings deur ander metaaldele is nie. Voorsorgmaatreëls moet veral getref word om te voorkom—

(a) dat die ingangswikkelings, die uitgangwikkelings en die draaie van die wikkelings nie verplaas word nie;

(b) dat binnebedrading vir buiteverbindings verplaas word of dat dele van wikkelings of binnebedrading onnodig verplaas word in die geval van deurslag van drade langs verbindings of die losraak van verbindings;

(c) dat drade, skroewe, wasters en soortgelyke hegstukke enige deel van die isolasie tussen die ingangsbaan en die leweringsbaan, met inbegrip van die wikkelings, oorbrug indien hulle slap word of losraak.

shock, fire hazards, mechanical hazards, or dangerous malfunction and, both during and after the completion of the tests given in B-8.1.1, the appliance shall comply with the requirements of 19.1 *(a)* and *(b)* of this specification.

B-8.1.1 *Test*

(a) *Test conditions.* Conduct the test with the applicable fault conditions specified in (1), (2), and (3) below simulated in turn, and associated with such other fault conditions which examination of the appliance and its circuit diagram shows would be a consequence of the initial fault:

(1) If creepage distances and clearances between live parts of different polarities that are not properly encapsulated are less than those specified in B-9, short-circuit the live parts.

(2) Short-circuit across insulating parts that do not comply with the requirements of B-6.

(3) Short-circuit across or, if applicable, open-circuit electronic devices, electronic units, and components such as resistors, capacitors, and inductors.

(b) *Procedure.* Operate the appliance under the most unfavourable normal operating conditions given in 11.1.1 *(a)*, at rated voltage or at the most unfavourable voltage of the rated voltage range, as relevant, for the appropriate operating time specified in 11.1.1 *(a)* (12) but, in the case of an appliance for intermittent operation, for one operating cycle only.

B-9 CREEPAGE DISTANCES, CLEARANCES AND DISTANCES THROUGH INSULATION

B-9.1 Circuits conductively connected to the supply terminals or to supply contacts shall comply with the requirements of 29.1 and 29.2 and, in addition, in circuits separated from the supply by a safety isolating transformer, creepage distances and clearances shall be—

(a) not less than the appropriate values given in Columns 3 and 4 of Table B-1 in the cases of

(1) basic insulation between live parts of different polarity;

(2) the insulation between live parts and

(i) non-accessible parts in a Class II appliance,

(ii) accessible parts in other appliances;

(3) supplementary insulation;

(b) not less than twice the appropriate values shown in Column 3 and Column 4 of Table B-1 in the case of reinforced insulation.

TABLE B-1—CREEPAGE DISTANCES AND CLEARANCES

1	2	3	4
Working voltage		Clearance, mm, min.	Creepage distance, mm, min.
r.m.s., V	Peak, V		
V ≤ 12	V ≤ 17	0,19	0,40
12 < V ≤ 30	17 < V ≤ 43	0,28	0,55
30 < V ≤ 60	43 < V ≤ 85	0,38	0,72
60 < V ≤ 130	85 < V ≤ 184	0,62	1,12
130 < V ≤ 250	184 < V ≤ 354	1,15	1,95

B-10 OPERATION UNDER MAINS-BORNE PERTURBATION

B-10.1 Any malfunction of an electronic control or electronic control system due to mains-borne perturbations shall not be such that it can result in damage to persons or surroundings.

ANNEXURE C. CONSTRUCTION OF SAFETY ISOLATING TRANSFORMERS

C-1 The construction of a safety isolating transformer shall comply with the requirements given in C-1.1-C-1.3 inclusive.

C-1.1 The input windings and output windings shall be separated by an insulating barrier, and the construction shall be such that there is no possibility of any connection, direct or indirect, between these windings through other metal parts. In particular, precautions shall have been taken to prevent—

(a) displacement of the input windings, the output windings, and the turns of the windings;

(b) displacement of internal wiring for external connections, undue displacement of parts of windings, or of internal wiring, in the event of rupture of wires adjacent to connections or loosening of connections;

(c) wires, screws, washers, and similar fasteners from bridging any part of the insulation between the input circuit and the output circuit(s), including the windings, if they become slack or disengaged.

University of Fort Hare
Together in Excellence

C-1.2 Die ingangswikkelings en elke uitgangswikkeling moet op so 'n manier gewikkel word dat, in elke laag van die wikkeling, elke draai teenaan die volgende draai is. Daar word geag dat die volgende konstruksies aan bogemelde vereistes voldoen:

(a) Wikkelings op afsonderlike tolle isoleermateriaal.

(b) Wikkelings op 'n enkele tol, met 'n skeimuur saam uit een stuk gedruk of gevorm is of, indien die skeimuur van die aangedrukte tipe is, daar 'n tussenmantel of ander bedekking oor elkę kant van die las tussen die tol en die muur is.

(c) Konsentriese wikkelings op isolasie wat in fynplaatform op 'n tol of op die ysterkern van die transformator aangewend word, en tussen die ingangswikkeling en elke uitgangswikkeling, mits die isolasie bestaan uit minstens drie lae wat sodanig is dat, wanneer twee lae op mekaar geplaas word, hulle sonder enige oorvonking of deurslag 'n spanning van 3 750 V aangelê, soos in 16.1.3 *(b)*, tussen die buiteoppervlakke van die twee lae deurstaan.

C-1.3 Die entdraaie van elke wikkeling moet in posisie gehou word op positiewe wyse soos stywe omwindsel van buigsame isoleermetaal of deur impregnering met 'n hardbakmateriaal wat volledig in die tussenruimtes ingedring het en die entdraaie afgedig het.

AANHANGSEL D. ALTERNATIEWE VEREISTES VIR BESKERMENDE MOTOREENHEDE

D-1 Die motoreenheid van 'n toestel wat bedoel is vir gebruik sonder 'n bediener en wat voorsien is van beskerming in toestande waar die motor staak of tydens lopende oorbelasting of albei moet, as alternatief tot voldoening aan die vereistes van 19.1 *(c)* of 19.1 *(d)*, soos toepaslik, die toets in 19.1.6 deurstaan in die toestande gespesifiseer in D-1.1 en gedurende die toets—

(a) moet die motorbeskermer op die bedoelde manier werk;

(b) moet die motor aan die vereistes van afdeling 9 voldoen;

(c) mag geen brandgevaar voorkom nie;

(d) mag die temperatuur nie die toepaslike waardes in tabel 10 oorskry nie; en

moet die motor hierbenewens na die toets, die toets vir elektriese sterkte gespesifiseer in 19.1 *(b)* deurstaan.

D-1.1 *Toets.* Voer die toets in 19.1.6 uit terwyl die motor òf binne die toestel is of òp 'n bank gemonteer is, maar die duur van die toets moet soos volg wees:

(a) Laat 'n motor met 'n selfhers'elbeskermer 72 h lank met 'n gestaakte motor sikleer in die geval van 'n toestel met 'n kort tydperk van elektriese spanning en 432 h lank in die geval van 'n toestel met 'n lang periode van elektriese spanning.

(b) Laat 'n motor met 'n beskermer wat weer met die hand ingestel kan word, 60 maal met 'n gestaakte motor werk. Stel die beskermer weer na elke werking in so gou dit moontlik is dat dit toe kan bly of na 'n pouse van 30 s, watter tydperk ook al die langste is.

Let op na die temperature met gereelde tussenpose gedurende die eerste 72 h vir motore met selfherstelbeskermers of gedurende die eerste 10 werkings vir motore met beskermers wat weer met die hand ingestel kan word.

D-1.2 'n Motorbeskermer wat weer met die hand ingestel kan word, moet 'n vryuitklinkskakelmeganisme hê.

AANHANGSEL E. METING VAN KRUIPAFSTANDE EN VRY RUIMTES

E-1 Die metodes vir die meet vir kruipafstande en vry ruimtes wat gevolg moet word om voldoening aan die vereistes van 29.1 na te gaan en te beoordeel, word in geval 1-10 van hierdie aanhangsel uiteengesit. Hierdie gevalle onderskei nie tussen splete en groewe of tussen tipes isolasie nie en die reëls wat daarin aangegee word, is op die volgende gebaseer:

(a) 'n Groef kan parallelle, ineenlopende of uiteenlopende kante hê;

(b) enige groef met uiteenlopende kante, 'n minimum breedte van meer as 0,25 mm, 'n diepte van meer as 1,5 mm en 'n breedte aan die onderkant van minstens 1 mm word as 'n lugspleet beskou (kyk geval 8);

(c) enige hoek wat 'n hoek van minder as 80° insluit, word geag oorbrug te wees, by die ongunstigste plek in die hoek, deur 'n isoleerskakel wat 0,25 mm breed is in vullisvrye toestande en 1 mm in ander gevalle (kyk geval 3);

(d) waar die afstand oor die bokant van 'n groef minstens 1 mm is, maar in 'n vullisvrye toestand minstens 0,25 mm is, bestaan daar geen kruipafstand oor die lugruimte nie (kyk geval 2);

(e) daar word aangeneem dat daar geen kruippad is nie indien daar 'n lugspleet is soos in *(b)*;

(f) kruipafstande en vry ruimtes tussen dele wat met betrekking tot mekaar beweeg, word gemeet wanneer hierdie dele in die ongunstigste staande posisie is;

(g) 'n berekende kruipafstand is nooit kleiner as 'n gemete afstand nie;

(h) enige lugspleet wat minder as 0,25 mm breed is in die geval van 'n vullisvrye situasie en minder as 1 mm breed is in ander gevalle, word veronagsaam by berekening van die totale vry ruimte

C-1.2 The input winding and each output winding shall be wound in such a manner that, in each layer of the winding, each turn is in close proximity to the next successive turn. The following constructions shall be deemed to comply with the above requirements:

(a) Windings on separate spools of insulating material.

(b) Windings on a single spool, with a partition wall of an insulating material, provided that the spool and partition wall are pressed or moulded in one piece or that, if the partition wall is of the pushed-on type, there is an intermediate sheath or other covering over each side of the joint between the spool and the wall.

(c) Concentric windings on insulation that is applied in thin sheet form on a spool or on the iron core of the transformer, and between the input winding and each output winding, provided that the insulation consists of at least three layers that are such that, when two layers are placed in contact they withstand, without the occurrence of any flashover or breakdown, a voltage of 3 750 V applied, as in 16.1.3 *(b)*, between the outer surfaces of the two layers.

C-1.3 The end turns of each winding shall be retained in position by a positive means such as a tight-wrapping of a flexible insulating material, or impregnation by a hard baking material that has fully penetrated the interstices and sealed off the end turns.

ANNEXURE D. ALTERNATIVE REQUIREMENTS FOR PROTECTED MOTOR UNITS

D-1 A motor unit of an appliance intended for use unattended, and that is provided with protection under stalled motor or running overload conditions or both, shall, as an alternative to complying with the requirements of 19.1 *(c)* or 19.1 *(d)* as applicable, withstand the test given in 19.1.6 under the conditions specified in D-1.1, and during the test—

(a) the motor protector shall operate in the intended manner;

(b) the motor shall comply with the requirements of section 9;

(c) no fire hazard shall occur;

(d) temperatures shall not exceed the relevant values given in Table 10; and

in addition, the motor shall, after the test, withstand the electric strength test specified in 19.1 *(b)*.

D-1.1 *Test.* Carry out the test given in 19.1.6 with the motor either in the appliance or mounted on a bench, except that the duration of the test shall be as follows:

(a) Cause a motor with a self-resetting protector to cycle with a stalled rotor for 72 h in the case of an appliance having a short period of electrical stress, and for 432 h in the case of an appliance having a long period of electrical stress.

(b) Operate a motor with a protector which can be reset by hand 60 times with a stalled rotor, resetting the protector after each operation as soon as possible for it to remain closed or after a pause of 30 s, whichever is the longer period.

Observe the temperatures at regular intervals during the first 72 h for motors with self-resetting protectors, or during the first ten operations for motors with protectors which can be reset by hand.

D-1.2 A motor protector which can be reset by hand shall have a tripfree switching mechanism.

ANNEXURE E. MEASUREMENT OF CREEPAGE DISTANCES AND CLEARANCES

E-1 The methods of measuring creepage distances and clearances to be used in interpreting and assessing compl[illegible] the requirements of 29.1 are indicated in Cases 1-10 of th[illegible]. These cases do not differentiate between gaps and grooves or between types of insulation, and the rules given in them are based on the following:

(a) A groove may have parallel, converging, or diverging sides;

(b) any groove having diverging sides, a minimum width exceeding 0,25 mm, a depth exceeding 1,5 mm, and a width at the bottom at least 1 mm, is regarded as an air gap (see Case 8);

(c) any corner that includes an angle of less than 80° is regarded as being bridged, at the most unfavourable position in the corner, by an insulating link of width 0,25 mm in dirt-free situations and 1 mm in other cases (see Case 3);

(d) where the distance across the top of a groove is at least 1 mm, but, in a dirt-free situation at least 0,25 mm, no creepage distance exists across the air space (see Case 2);

(e) a creepage path is assumed not to exist if there is an air gap as in *(b)*;

(f) creepage distances and clearances between parts that move relative to each other are measured when these parts are in the most unfavourable stationary positions;

(g) a computed creepage distance is never less than a measured distance;

(h) any air gap of width less than 0,25 mm in the case of a dirt-free situation, and less than 1 mm in other cases, is ignored in computing the total clearance.

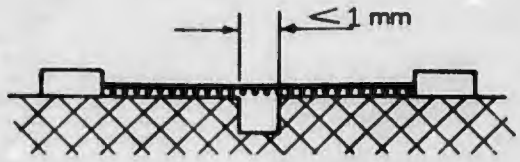

Toestand: Pad wat oorweeg word, sluit 'n groef van enige diepte en met 'n breedte van minder as 1 mm en met parallelle of ineenlopende sye in.

Reël: Meet kruipafstand en vry ruimte regstreeks oor die groef soos aangetoon.

Geval 1

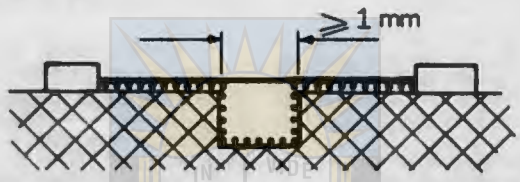

Toestand: Pad wat oorweeg word, sluit 'n groef van enige diepte en met 'n breedte van minstens 1 mm en met parallelle sye in.

Reël: Vry ruimte is die "siglyn-" afstand. Kruippad volg die kontoer van die groef.

Geval 2

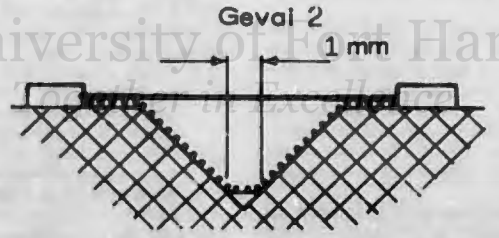

Toestand: Pad wat oorweeg word, sluit 'n V-vormgroef met 'n binnehoek van minder as 80 ^{0} en 'n breedte van meer as 1 mm in.

Reël: Die vry ruimte is die "siglyn-" afstand. Kruippad volg die kontoer van die groef, maar "kortsluit" die onderkant van die onderkant van die groef deur 'n skakel wat 0,25 breed is in vullisvrye toestande en 1 mm in ander gevalle.

Geval 3

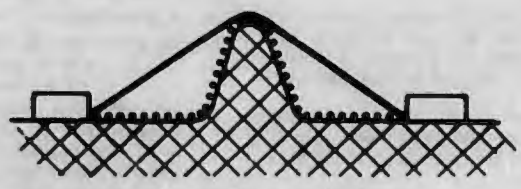

7702/2-1225/1

Toestand: Pad wat oorweeg word, sluit 'n rib in.

Reël: Die vry ruimte is die kortste regstreekse lugpad oor die bokant van die rib.

Geval 4

——— Vry ruimte
..... Kruipafstand

University of Fort Hare
Together in Excellence

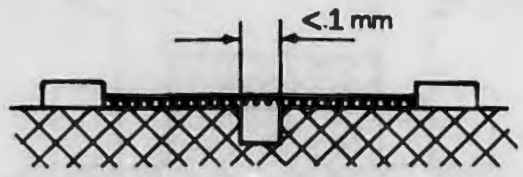

Condition: Path under consideration includes a parallel- or converging-sided groove of any depth and of width less than 1 mm

Rule: Measure creepage distance and clearance directly across the groove as shown

Case 1

Condition: Path under consideration includes a parallel-sided groove of any depth and of width at least 1 mm

Rule: Clearance is the "line of sight" distance. Creepage path follows the contour of the groove

Case 2

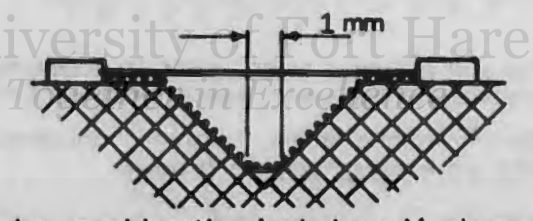

Condition: Path under consideration includes a V-shaped groove with an internal angle of less than 80° and a width greater than 1 mm

Rule: Clearance is the "line of sight" distance. Creepage path follows the contour of the groove but "short-circuits" the bottom of the groove by a link of width 0,25 in a dirt-free situation, and 1 mm in other cases

Case 3

7702/1-1225/2

Condition: Path under consideration includes a rib

Rule: Clearance is the shortest direct air path over the top of the rib

Case 4

—— Clearance
•••••• Creepage distance

University of Fort Hare
Together in Excellence

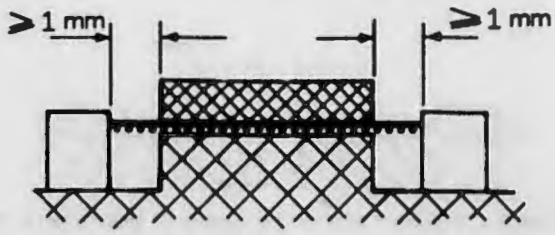

Toestand: Pad wat oorweeg word, sluit 'n ongelymde las in met groewe wat aan elke kant minder as 0,25 mm breed is in die geval van 'n vullingsvrye toestand en minder as 1 mm in ander gevalle.

Reël: Kruip- en vryruimtepad is die "siglyn-" afstand aangetoon

Geval 5

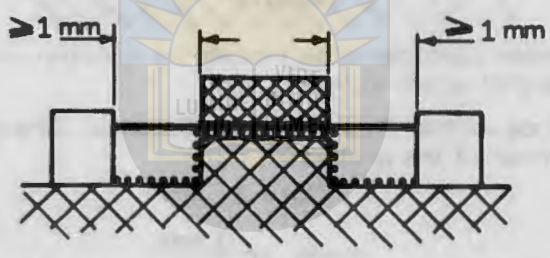

Toestand: Pad wat oorweeg word, sluit 'n ongelymde las in met groewe wat aan weerskante minstens 1 mm breed is.

Reël: Die vry ruimte is die "siglyn-" afstand. Die kruippad volg die kontoer van die groewe.

Geval 6

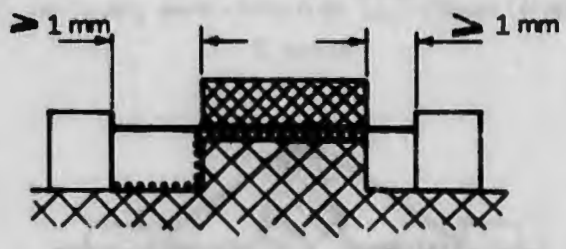

Toestand: Pad wat oorweeg word, sluit 'n ongelymde las in met 'n groef wat minder as 1 mm breed is aan die een kant en 'n groef wat minstens 1 mm breed is aan die ander kant.

Reël: Vryruimte- en kruippaaie is soos aangetoon.

Geval 7

_____ Vry ruimte
.....Kruipafstand

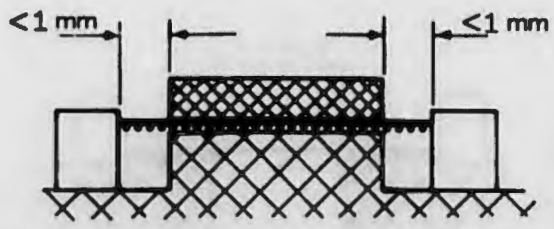

Condition: Path under consideration includes an uncemented joint with grooves of width, on each side, less than 0,25 mm in the case of a dirt-free situation and less than 1 mm in other cases

Rule: Creepage and clearance path is the "line of sight" distance shown

Case 5

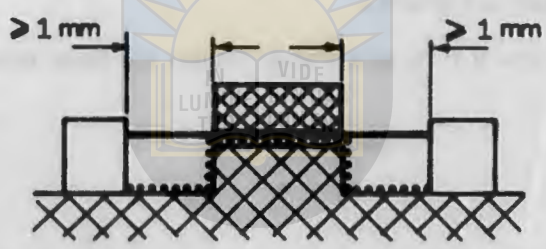

Condition: Path under consideration includes an uncemented joint with grooves of width, on each side, at least 1 mm

Rule: Clearance is the "line of sight" distance. Creepage path follows the contour of the grooves

Case 6

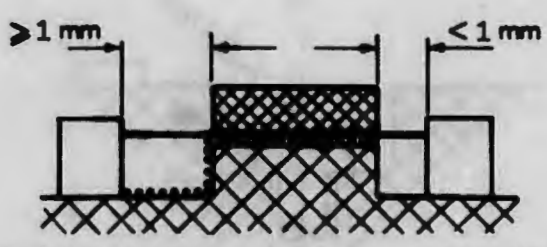

7699/1-1225/2

Condition: Path under consideration includes an uncemented joint with a groove of width less than 1 mm on one side and a groove of width at least 1 mm on the other side

Rule: Clearance and creepage paths are as shown

Case 7

—— Clearance
•••••• Creepage distance

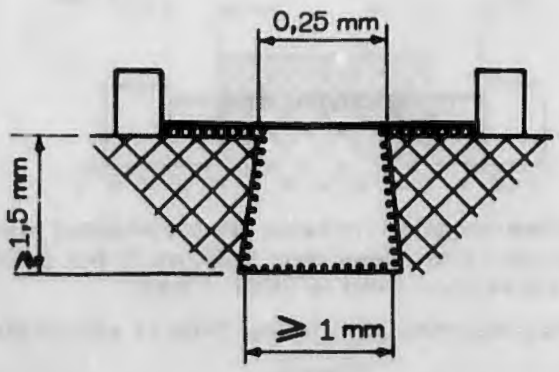

Toestand: Pad wat oorweeg word, sluit 'n groef wat minstens 1,5 mm diep is en breër as 0,25 mm is by die nouste deel en minstens 1 mm breed aan die onderkant is, met uiteenlopende sye in.

Reël : Die vry ruimte is die "sigiyn-" afstand. Die kruippad volg die kantoer van die groef.

Geval 3 geld ook vir 'n binnehoek indien die hoek minder as 80 ^{0} is.

Geval 8

University of Fort Hare
Together in Excellence

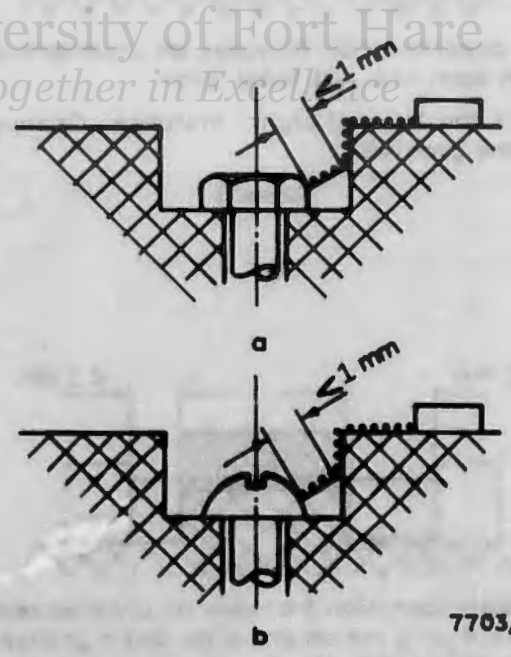

7703/1-1225/2

Die spleet tussen die kop van die skroef en die wand van die inlating is te nou om in aanmerking geneem te word.

Geval 9

——— Vry ruimte
..... Kruipafstand

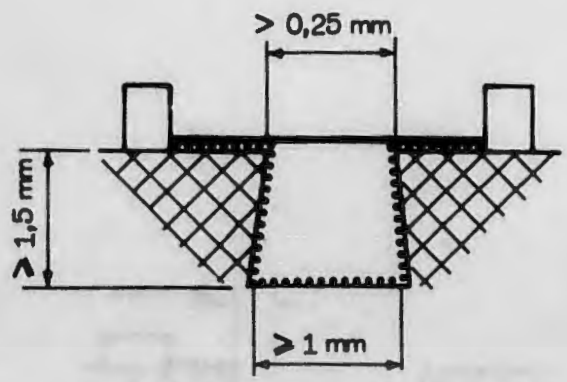

Condition: Path under consideration includes a diverging-sided groove at least 1,5 mm deep and of width exceeding 0,25 mm at the narrowest part and at least 1 mm at the bottom

Rule: Clearance is the "line of sight" distance. Creepage path follows the contour of the groove

Case 3 applies as well to an internal corner if the angle is less than 80°

Case 8

University of Fort Hare
Together in Excellence

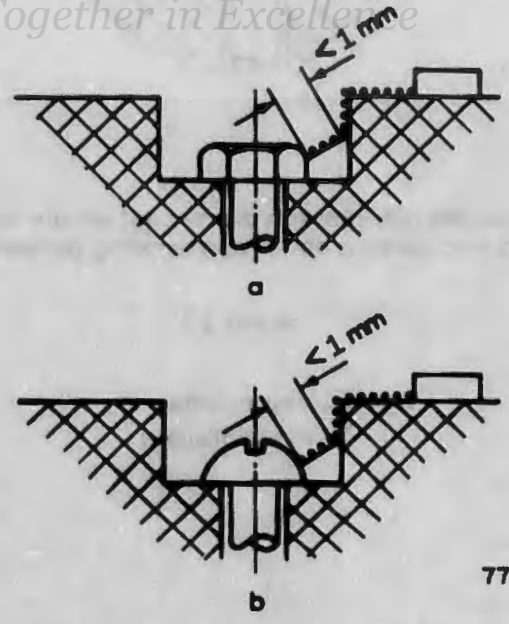

7703/1-1225/2

Gap between head of screw and wall of recess too narrow to be taken into account

Case 9

—— Clearance
•••••• Creepage distance

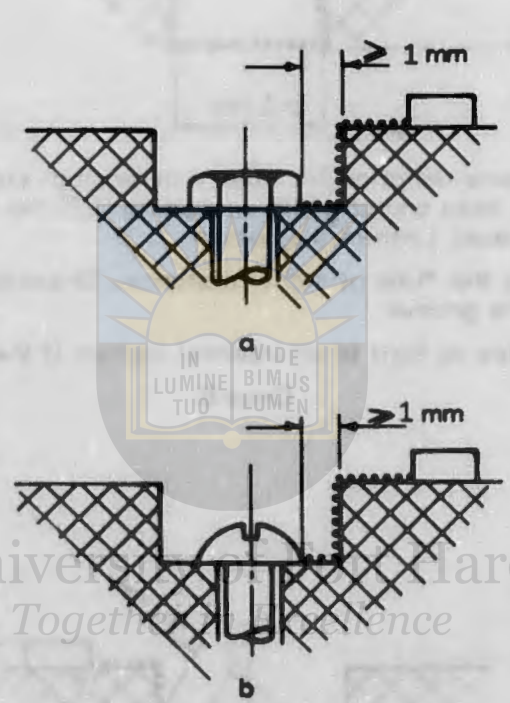

Die spleet tussen die kop van die skroef en die wand van die inlating is breed genoeg om in aanmerking geneem te word

Geval 10

——— Vry ruimte
·····Kruipafstand

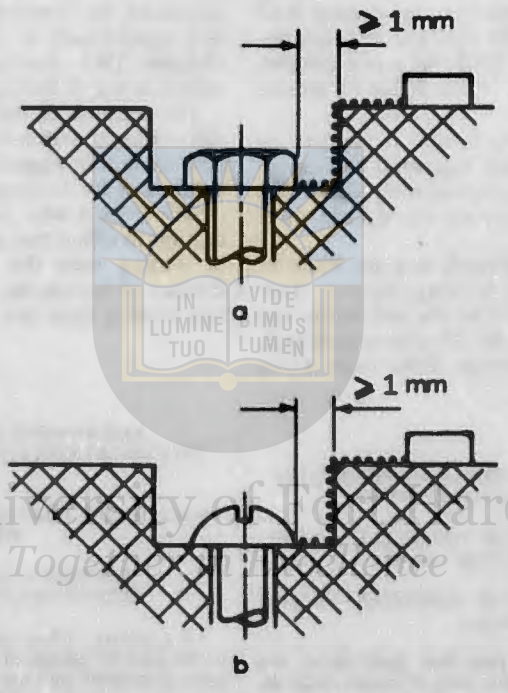

Gap between head of screw and wall of recess wide enough to be taken into account

Case 10

—— Clearance
•••••• Creepage distance

University of Pretoria
Together in Excellence

KENNISGEWING 592 VAN 1980

WET OP STANDAARDE, 1962

WYSIGING VAN VERPLIGTE STANDAARDSPESIFIKASIES VIR SEKERE ELEKTRIESE TOERUSTING

Kragtens artikel 15 (3) van die Wet op Standaarde, 1962 (Wet 33 van 1962) word bekendgemaak dat die Minister van Nywerheidswese van voorneme is om die verpligte standaardspesifikasies vir sekere elektriese toerusting, gepubliseer by Goewermentskennisgewing 1017 van 3 Julie 1964 en herpubliseer by Goewermentskennisgewing R.1615 van 22 Oktober 1965, te wysig ooreenkomstig die besonderhede vervat in die Bylae by hierdie kennisgewing.

Die strekking van die wysiging is om 'n vereiste en toetsmetode met betrekking tot die kapasiteit van draagbare elektriese toestelle vir die verwarming van vloeistowwe, ooreenkomstig internasionale standaarde in te stel.

Enige persoon wat beswaar wil maak teen die Minister se voorneme om dié wysiging aan te bring, moet sy skriftelike beswaar binne twee maande na die publikasie van hierdie kennisgewing indien by die Direkteur-generaal, Suid-Afrikaanse Buro vir Standaarde, Privaatsak X191, Pretoria.

BYLAE

WYSIGING VAN VERPLIGTE STANDAARDSPESIFIKASIES VIR SEKERE ELEKTRIESE TOERUSTING

BYLAE 5: DRAAGBARE ELEKTRIESE TOESTELLE VIR DIE VERWARMING VAN VLOEISTOWWE

AFDELING 4. ELEKTRIESE EN FISIESE VEREISTES—Voeg die volgende subseksie by:

4.9 Inhoud. Volgens 6.14 getoets, mag daar geen tekens van oorloop op die toestel of op die kladpapier wees 20 minute nadat die toevoer afgeskakel is nie.

AFDELING 6. TOETSMETODES—Voeg die volgende subseksie by:

6.14 Inhoudsvermoëtoets. Plaas die toestel op 'n vel gekleurde kladpapier op 'n plat, horisontale oppervlak. Gooi 'n hoeveelheid water, gelyk aan die keninhoud, in die toestel en verbind die toestel aan 'n toevoerspanning wat gestel is om die hoogste keninset te gee. Bring die water tot kookpunt en laat 1 minuut lank kook. Skakel die toevoer af, laat die toestel 20 minute lank staan en ondersoek dan die toestel en die kladpapier vir tekens van water wat oorgeloop het.

NOTICE 592 OF 1980

STANDARDS ACT, 1962

AMENDMENT OF COMPULSORY STANDARD SPECIFICATIONS FOR CERTAIN ITEMS OF ELECTRICAL EQUIPMENT

Notice is given in terms of section 15 (3) of the Standards Act, 1962 (Act 33 of 1962), that the Minister of Industries intends to amend the compulsory standard specifications for certain items of electrical equipment published by Government Notice 1017 of 3 July 1964, and republished by Government Notice R.1615 of 22 October 1965. Particulars of the amendment are contained in the Schedule to this notice.

The purport of the amendment is in accordance with international standards to introduce a requirement and test method in regard to the capacity of portable electric appliances for heating liquids.

Any person who wishes to object to the Minister's intention to effect this amendment shall lodge his objection in writing with the Director General, South African Bureau of Standards, Private Bag X191, Pretoria, within two months from the date of publication of this notice.

SCHEDULE

AMENDMENT OF COMPULSORY STANDARD SPECIFICATIONS FOR CERTAIN ITEMS OF ELECTRICAL EQUIPMENT

SCHEDULE 5: PORTABLE ELECTRICAL APPLIANCES FOR HEATING LIQUIDS

SECTION 4. ELECTRICAL AND PHYSICAL REQUIREMENTS—Add the following subsection:

4.8 Capacity. When tested in accordance with 6.14, there shall be no signs of spillage of water on the appliance or on the blotting paper 20 minutes after the supply has been switched off.

SECTION 6. METHODS OF TEST—Add the following subsection:

6.14 Capacity Test. Place the appliance on a sheet of coloured blotting paper on a flat horizontal surface. Place a quantity of water equal to the rated capacity in the appliance and connect the appliance to a supply voltage adjusted to give the highest rated input. Allow the water to come to the boil and then allow it to boil for a period of 1 minute. Switch off the supply, allow the appliance to stand for 20 minutes, and then examine the appliance and the blotting paper for signs of spillage of water.

University of Fort Hare
Together in Excellence

INHOUD

Departement van Nywerheidswese

ALGEMENE KENNISGEWINGS

No.		BLADSY
591	Wet op Standaarde, 1962: Verpligte Standaardspesifikasie vir die Veiligheid van Elektriese Toestelle	1
592	Wet op Standaarde, 1962: Wysiging van Verpligte Standaardspesifikasies vir Sekere Elektriese Toerusting	74

CONTENTS

Department of Industries

GENERAL NOTICES

No.		PAGE
591	Standards Act, 1962: Compulsory Standard Specification for the Safety of Electrical Appliances	1
592	Standards Act, 1962: Amendment of Compulsory Standard Specifications for Certain Items of Electrical Equipment	74

University of Fort Hare
Together in Excellence

GEDRUK VIR DIE STAATSDRUKKER, PRETORIA, DEUR KAAP & TRANSVAAL DRUKKERS (EDMS) BPK, KAAPSTAD—BB2712/12 100
PRINTED FOR THE GOVERNMENT PRINTER, PRETORIA, BY CAPE & TRANSVAAL PRINTERS (PTY) LTD, CAPE TOWN—BB2712/12 100

7197

University of Fort Hare
Together in Excellence

STAATSKOERANT
VAN DIE REPUBLIEK VAN SUID-AFRIKA

REPUBLIC OF SOUTH AFRICA
GOVERNMENT GAZETTE

REGULASIEKOERANT No. 3059 | REGULATION GAZETTE No. 3059

PRYS + 1c AVB 20c PRICE + 1c GST
BUITELANDS 30c ABROAD
POSVRY · POST FREE

As 'n Nuusblad by die Poskantoor Geregistreer | *Registered at the Post Office as a Newspaper*

VOL. 182] KAAPSTAD, 29 AUGUSTUS 1980 [No. 7197
CAPE TOWN, 29 AUGUST 1980

University of Fort Hare
Together in Excellence

GOEWERMENTSKENNISGEWINGS

DEPARTEMENT VAN MANNEKRAGBENUTTING

No. R.1755] [29 Augustus 1980

WET OP NYWERHEIDSVERSOENING, 1956

LEERNYWERHEID, REPUBLIEK VAN SUID-AFRIKA

WYSIGING VAN OOREENKOMS VIR DIE SKOEISELSEKSIE

Ek, STEPHANUS PETRUS BOTHA, Minister van Mannekragbenutting, verklaar hierby—

(a) kragtens artikel 48 (1) *(a)* van die Wet op Nywerheidsversoening, 1956, dat die bepalings van die Ooreenkoms (hierna die Wysigingsooreenkoms genoem) wat in die Bylae hiervan verskyn en op die Skoeiselseksie van die Leernywerheid betrekking het, met ingang van die tweede Maandag na die datum van publikasie van hierdie kennisgewing en vir die tydperk wat op 30 Junie 1981 eindig, bindend is vir die werkgewersorganisasies en die vakverenigings wat die Wysigingsooreenkoms aangegaan het en vir die werkgewers en werknemers wat lede van genoemde organisasies of verenigings is;

(b) kragtens artikel 48 (1) *(b)* van genoemde Wet, dat die bepalings van die Wysigingsooreenkoms met ingang van die tweede Maandag na die datum van publikasie van hierdie kennisgewing en vir die tydperk wat op 30 Junie 1981 eindig, bindend is vir alle ander werkgewers en werknemers as dié genoem in

GOVERNMENT NOTICES

DEPARTMENT OF MANPOWER UTILISATION

No. R.1755] [29 August 1980

INDUSTRIAL CONCILIATION ACT, 1956

LEATHER INDUSTRY, REPUBLIC OF SOUTH AFRICA

AMENDMENT OF AGREEMENT FOR THE FOOTWEAR SECTION

I, STEPHANUS PETRUS BOTHA, Minister of Manpower Utilisation, hereby—

(a) in terms of section 48 (1) *(a)* of the Industrial Conciliation Act, 1956, declare that the provisions of the Agreement (hereinafter referred to as the Amending Agreement) which appears in the Schedule hereto and which relates to the Footwear Section of the Leather Industry, shall be binding, with effect from the second Monday after the date of publication of this notice and for the period ending 30 June 1981, upon the employers' organisations and the trade unions which entered into the Amending Agreement and upon the employers and employees who are members of the said organisations or unions;

(b) in terms of section 48 (1) *(b)* of the said Act, declare that the provisions of the Amending Agreement shall be binding, with effect from the second Monday after the date of publication of this notice and for the period ending 30 June 1981, upon all employers and employees other than those referred

paragraaf *(a)* van hierdie kennisgewing, wat betrokke is by of in diens is in genoemde Nywerheid in die Republiek van Suid-Afrika, uitgesonderd die hawe en nedersetting van Walvisbaai; en

(c) kragtens artikel 48 (3) *(a)* van genoemde Wet, dat die bepalings van die Wysigingsooreenkoms met ingang van die tweede Maandag na die datum van publikasie van hierdie kennisgewing en vir die tydperk wat op 30 Junie 1981 eindig, in die Republiek van Suid-Afrika, uitgesonderd die hawe en nedersetting van Walvisbaai, *mutatis mutandis* bindend is vir alle persone wat nie werknemers is nie en wat in diens is in genoemde Nywerheid by dié werkgewers vir wie enigeen van genoemde bepalings ten opsigte van werknemers bindend is en vir daardie werkgewers ten opsigte van sodanige persone in hul diens.

S. P. BOTHA
Minister van Mannekragbenutting

BYLAE

NASIONALE NYWERHEIDSRAAD VIR DIE LEERNYWERHEID VAN SUID-AFRIKA—SKOEISELSEKSIE

OOREENKOMS

ingevolge die Wet op Nywerheidsversoening, 1956, gesluit deur en aangegaan tussen die

(a) Midland and Border Leather Industry Manufacturers' Association;
(b) Cape Western and North-Western Leather Industries Employers' Association;
(c) Transvaal Footwear, Tanning and Leather Trades Association;
(d) Natal Footwear Tanning and General Leather Manufactuerers' Association;

en

(e) Southern Cape Leather Industries Association

(hierna die „werkgewers" of „werkgewersorganisasies" genoem), aan die een kant, en die

(f) National Union of Leather Workers;
(g) Transvaal Leather and Allied Trades Industrial Union

(hierna die „werknemers" of die „vakverenigings" genoem), aan die ander kant,
wat die partye is by die Nasionale Nywerheidsraad vir die Leernywerheid van Suid-Afrika,
om die Ooreenkoms gepubliseer by Goewermentskennisgewing R.458 van 14 Maart 1980, soos gewysig by Goewermentskennisgewing R.1462 van 18 Julie 1980, soos volg te wysig:

1. KLOUSULE 4 VAN DEEL I.—LONE EN LOONSKALE

(1) In subklousule (1) *(a)* (vi), vervang die uitdrukking „Indien 'n werkgewer gedurende die tydperk wat op 1 Julie 1980 begin" deur die uitdrukking „Indien 'n werkgewer gedurende die tydperk na 30 Junie 1980" en die bedrag „R40,58" waar dit ook al voorkom, deur die bedrag „R41,46".

(2) In subklousule (1) *(a)* (vii), vervang die uitdrukking „Indien 'n werkgewer gedurende die tydperk wat op 1 Julie 1980 begin" deur die uitdrukking „Indien 'n werkgewer gedurende die tydperk na 30 Junie 1980" en die bedrag „R36,88" waar dit ook al voorkom deur die bedrag „R37,69".

(3) In subklousule (7) *(a)*, vervang „25 Oktober 1979" waar dit ook al voorkom deur „15 Mei 1980".

(4) Vervang subklousule (7) *(b)* deur die volgende:

„'n Werknemer, uitgesonderd 'n leerling, wat op 31 Desember 1980 'n hoër loon ontvang as wat op dié datum voorgeskryf is vir die klas werk waarvoor hy in diens is, moet, met ingang van 1 Januarie 1981, 'n bykomende bedrag betaal word gelyk aan die verskil tussen die loon soos op 31 Desember 1980 voorgeskryf en die loon soos op 1 Januarie 1981 voorgeskryf vir die klas werk waarvoor hy in diens is.".

to in paragraph *(a)* of this notice, who are engaged or employed in the said Industry in the Republic of South Africa, excluding the port and settlement of Walvis Bay; and

(c) in terms of section 48 (3) *(a)* of the said Act, declare that in the Republic of South Africa, excluding the port and settlement of Walvis Bay, and with effect from the second Monday after the date of publication of this notice and for the period ending 30 June 1981, the provisions of the Amending Agreement shall *mutatis mutandis* be binding upon all persons who are not employees and who are employed in the said Industry by the employers upon whom any of the said provisions are binding in respect of employees and upon those employers in respect of such persons in their employ.

S. P. BOTHA
Minister of Manpower Utilisation

SCHEDULE

NATIONAL INDUSTRIAL COUNCIL OF THE LEATHER INDUSTRY OF SOUTH AFRICA—FOOTWEAR SECTION

AGREEMENT

in accordance with the provisions of the Industrial Conciliation Act, 1956, made and entered into by and between the

(a) Midland and Border Leather Industry Manufacturers' Association;
(b) Cape Western and North-Western Leather Industries Employers' Association;
(c) Transvaal Footwear, Tanning and Leather Trades Association;
(d) Natal Footwear, Tanning and General Leather Manufacturers' Association;

and

(e) Southern Cape Leather Industries Association

(hereinafter referred to as the "employers" or the "employers' organisations"), of the one part, and the

(f) National Union of Leather Workers;

and

(g) Transvaal Leather and Allied Trades Industrial Union

(hereinafter referred to as the "employees" or the "trade unions"), of the other part,
being parties to the National Industrial Council of the Leather Industry of South Africa,
to amend the Agreement published under Government Notice R.458 dated 14 March 1980, as amended by Government Notice R.1462 dated 18 July 1980, as follows:

1. CLAUSE 4 OF PART I.—WAGES AND WAGE RATES

(1) In subclause (1) *(a)* (vi), substitute the expression "An employer who after the period ending 30 June 1980" for the expression "An employer who during the period commencing 1 July 1980" and the amount "R41,46" for the amount "R40,58" wherever it appears.

(2) In subclause (1) *(a)* (vii), substitute the expression "An employer who after the period ending 30 June 1980" for the expression "An employer who during the period commencing 1 July 1980" and the amount "R37,69" for the amount "R36,88" wherever it appears.

(3) In subclause (7) *(a)*, substitute "15 May 1980" for "25 October 1979" wherever it appears.

(4) Substitute the following for subclause (7) *(b)*:

"An employee other than a learner who on 31 December 1980 is in receipt of a wage higher than that prescribed as at that date for the class of work on which he is engaged, shall, with effect from 1 January 1981, be paid an additional amount equal to the difference between the wage prescribed as at 31 December 1980 and the wage prescribed as at 1 January 1981 for the class of work on which he is employed.".

University of Fort Hare Together in Excellence

2. Klousule 9 van Deel I.—Vakansiedae en Jaarlikse Verlof

(1) In subklousule (7) *(a)*, vervang die uitdrukking „Paasmaandag" deur die uitdrukking „Gesinsdag".

(2) In subklousule (7) *(b)*, vervang die uitdrukking „Paasmaandag" deur die uitdrukking „Gesinsdag".

(3) In subklousule (11), vervang die bedrag „R40,58" deur die bedrag „R41,46".

2. Clause 9 of Part I.—Holidays and Annual Leave

(1) In subclause (7) *(a)*, substitute the expression "Family Day" for the expression "Easter Monday".

(2) In subclause (7) *(b)*, substitute the expression "Family Day" for the expression "Easter Monday".

(3) In subclause (11), substitute the amount "R41,46" for the amount "R40,58".

3. Aanhangsel C van Deel I.—Lone

Vervang Aanhangsel C van Deel I deur die volgende:

„AANHANGSEL C VAN DEEL I

LONE

	Gedurende die tydperk eindigende 31.12.1980		Daarna	
	Kolom A	Kolom B	Kolom A	Kolom B
	Per week	*Per week*	*Per week*	*Per week*
	R	R	R	R
(A) Wag	31,73	34,90	32,40	35,64
(B) Magasynmeester en/of pakhuisman, versendingsklerk	40,07	44,08	40,92	45,02
(C) Ketelbediener	31,73	34,90	32,40	35,64
(D) Motorvoertuigdrywer wat 'n voertuig dryf wat gelisensieer is om 'n lowlavrag te dra of te trek van—				
(i) minder as 2 722 kg	39,53	43,48	40,36	44,40
(ii) 2 722 kg	40,07	44,08	40,92	45,02
(iii) meer as 2 722 kg maar hoogstens 4 536 kg	42,66	46,92	43,56	47,92
(iv) meer as 4 536 kg maar hoogstens 6 350 kg	50,66	55,72	51,74	56,91
(E) Minderjariges in diens in beroepe waarvoor daar nie in hierdie Ooreenkoms lone voorgeskryf word nie:				
Eerste ses maande	16,71	18,38	17,07	18,77
Tweede ses maande	19,30	21,22	19,71	21,68
Derde ses maande	22,08	24,29	22,55	24,81
Vierde ses maande	25,05	27,56	25,59	28,14
Vyfde ses maande	28,21	31,04	28,82	31,70
Sesde ses maande	31,53	34,68	32,20	35,42
Daarna	34,32	37,76	35,06	38,56
(F) Werksaamhede in verband met die maak van kartondose:				
(i) Guillotine en/of draaisnymes en/of kerfmasjien met—				
(a) kragaandrywing	57,89	63,68	59,12	65,03
(b) handaandrywing	46,65	51,32	47,64	52,41
(ii) Kartondoosmakers	31,53	34,68	32,20	35,42
(iii) Die maak van kartondose, volgens ondervinding:				
Eerste ses maande	16,71	18,38	17,07	18,77
Tweede ses maande	19,30	21,22	19,71	21,68
Derde ses maande	22,08	24,29	22,55	24,81
Vierde ses maande	25,05	27,56	25,59	28,14
Vyfde ses maande	28,21	31,04	28,82	31,70
Daarna	31,53	34,68	32,20	35,42
(G) Werknemers wat letters met die hand set en etikette met 'n drukmasjien druk	52,39	57,63	53,50	58,85
(H) Werknemers wat kantstrokies maak:				
(a) Splits, skaaf, sny, groewe maak en afskuins	36,96	40,66	37,74	41,52
(b) Alle ander werksaamhede	27,84	30,62	28,43	31,28
(I) Verpakkers	29,70	32,67	30,33	33,36
(J) Werknemers wat breiwerk verrig	45,15	49,66	46,11	50,72
(K) Werknemers wat sproeiverf aan leer aanbring	52,28	57,51	53,39	58,73
(L) Werknemers wat messe maak:				
(a) Sweis- en/of sweissoldeer- en/of silwersoldeerwerk	62,97	69,27	64,31	70,74
(b) Lasse afwerk ná sweising	40,96	45,05	41,82	46,01
(c) Heg- en/of puntsweiswerk				
(d) Buigwerk volgens patroon en/of modelle, grootte met die hand op mes pons, verspanstaal merk en sny, oksidering van afgewerkte artikels en slypwerk	37,10	40,81	37,89	41,68".

3. Annexure C to Part I—Wages

Substitute the following for Annexure C to Part I:

"ANNEXURE C TO PART I

WAGES

	During the period ending 31.12.1980		Thereafter	
	Column A	Column B	Column A	Column B
	Per week	*Per week*	*Per week*	*Per week*
	R	R	R	R
(A) Watchman	31,73	34,90	32,40	35,64
(B) Storeman and/or warehouseman, despatch clerk	40,07	44,08	40,92	45,02
(C) Boiler attendant	31,73	34,90	32,40	35,64
(D) Motor vehicle driver driving a vehicle authorised to carry or haul a pay-load of—				
(i) under 2 722 kg	39,53	43,48	40,36	44,40
(ii) 2 722 kg	40,07	44,08	40,92	45,02
(iii) over 2 722 kg but not exceeding 4 536 kg	42,66	46,92	43,56	47,92
(iv) over 4 536 kg but not exceeding 6 350 kg	50,66	55,72	51,74	56,91
(E) Minors employed on occupations for which rates have not been prescribed in this Agreement:				
First six months	16,71	18,38	17,07	18,77
Second six months	19,30	21,22	19,71	21,68
Third six months	22,08	24,29	22,55	24,81
Fourth six months	25,05	27,56	25,59	28,14
Fifth six months	28,21	31,04	28,82	31,70
Sixth six months	31,53	34,68	32,20	35,42
Thereafter	34,32	37,76	35,06	38,56
(F) Cardboard box-making operations:				
(i) Guillotine and/or rotary cutting machine and/or scoring machine operated by—				
(a) power	57,89	63,68	59,12	65,03
(b) hand	46,68	51,32	47,64	52,41
(ii) Cardboard boxmakers	31,58	34,68	32,20	35,42
(iii) Making cardboard boxes, according to experience:				
First six months	16,71	18,38	17,07	18,77
Second six months	19,30	21,22	19,71	21,68
Third six months	22,08	24,29	22,55	24,81
Fourth six months	25,05	27,56	25,59	28,14
Fifth six months	28,21	31,04	28,82	31,70
Thereafter	31,53	34,68	32,20	35,42
(G) Employees employed on hand typesetting and printing labels on a printing machine	52,39	57,63	53,50	58,85
(H) Employees employed on weltmaking:				
(a) Splitting, skiving, cutting, grooving and bevelling	36,96	40,66	37,74	41,52
(b) All other operations	27,84	30,62	28,43	31,28
(I) Packers	29,70	32,67	30,33	33,36
(J) Employees employed on currying	45,15	49,66	46,11	50,72
(K) Employees employed on spraying of leather	52,28	57,51	53,39	58,73
(L) Employees employed on knife-making:				
(a) Welding and/or brazing and/or silver soldering	62,97	69,27	64,31	70,74
(b) Finishing of joints after welding	40,96	45,05	41,82	46,01
(c) Tack and/or spot welding; *(d)* Bending to templet and/or patterns, hand punching of size onto knife, marking and cutting of bracing steel, oxidising of finished articles and grinding	37,10	40,81	37,89	41,68".

4. Klousule 3 van Deel II.—Differensiële Lone

(1) In subklousule (1), vervang die bedrag „R37,38" deur die bedrag „R38,19".

(2) In voorbehoudsbepaling (i) van subklousule (1), vervang die bedrag „R37,38" deur die bedrag „R38,19".

(3) In subklousule (2) vervang die bedrag „R37,38" deur die bedrag „R38,19".

5. Klousule 5 van Deel II.—Ongekwalifiseerde Manlike Volwasse Werknemers

(1) In subklousule (1), vervang die bedrag „R37,38" waar dit die eerste keer voorkom deur die bedrag „R38,19".

4. Clause 3 of Part II.—Differential Rates

(1) In subclause (1), substitute the amount "R38,19" for the amount "R37,38".

(2) In proviso (i) to subclause (1), substitute the amount "R38,19" for the amount "R37,38".

(3) In subclause (2), substitute the amount "R38,19" for the amount "R37,38".

5. Clause 5 of Part II.—Unqualified Male Adult Employees

(1) In subclause (1), substitute the amount "R38,19" for the amount "R37,38", where it appears for the first time.

University of Fort Hare
Together in Excellence

(2) Vervang die eerste voorbehoudsbepaling van subklousule (1) deur die volgende:

„Met dien verstande dat sodanige laer loon minstens soos volg moet wees:

	Gedurende die tydperk eindigende 31.12.80	Daarna
	Per week	*Per week*
	R	R
Gedurende die eerste ses maande diens	38,19	39 00
Gedurende die tweede ses maande diens	39,99	40 83
Gedurende die volgende jaar diens	42,64	43,54 .

(3) In subklousule (3) *(a)*, vervang die bedrag „R37,38" deur die bedrag „R38,19".

(2) Substitute the following for the first proviso to subclause (1):

"Provided that such lower wage shall not be less than the following:

	During the period ending 31.12.1980	Thereafter
	Per week	*Per week*
	R	R
During the first six months of employment	38,19	39,00
During the second six months of employment	39,99	40,83
During the next year of employment	42,64	43,54".

(3) In subclause (3) *(a)*, substitute the amount "R38,19" for the amount "R37,38".

IN LUMINE TUO VIDEBIMUS LUMEN
University of Fort Hare
Together in Excellence

6 AANHANGSEL A VAN DEEL II VAN DIE OOREENKOMS

(1) Vervang klousule 1 (A) tot en met (N) van Aanhangsel A van Deel II deur die volgende:

„AANHANGSEL A VAN DEEL II VAN DIE OOREENKOMS

KLOUSULE 1.—SKOEISEL, NIE ELDERS GESPESIFISEER NIE

LONE

	Gedurende die tydperk eindigende 31 12.1980		Daarna	
	Kolom A	Kolom B	Kolom A	Kolom B
	Per week	*Per week*	*Per week*	*Per week*
	R	R	R	R
(A) PATROONAFDELING				
(i) Gekwalifiseerde werknemers in diens as patroonsnyers wat oorspronklike ontwerpe produseer en volgens beperkings met die hand gradeer, en/of skoentekenaars	65,56	72,11	66,95	73,65
(ii) Gekwalifiseerde werknemers wat— *(a)* met die hand, maar nie volgens beperkings nie, gradeer en wat nie oorspronklike ontwerpe produseer nie; *(b)* met gradeermasjiene werk; *(c)* oorspronklike voeringpatrone volgens boleerpatrone maak in gevalle waar daar geen leeskopieë of oorspronklike ontwerpe geproduseer word nie	55,40	60,94	56,58	62,24
(iii) Gekwalifiseerde werknemers wat enige werksaamheidverrig wat nie in (i) en (ii) hiervan gespesifiseer word nie	43,85	48,24	44,79	49,26
(B) UITSNYAFDELING				
Gekwalifiseerde werknemers in diens vir: (i) Die uitsny en sny van boleer met die hand of 'n masjien: *(a)* Basgelooide of chroomgelooide splitleer, basgelooide of halfchroomgelooide kalfsvel, chroomgelooide suédekalfsvel en basgelooide skaap- en bokvelle; Wit kalfsvel wat ten volle chroomgelooi is vir die vervaardiging van skoene uit een stuk gesny, bluchers en velskoene alleenlik, maar uitgesonderd skoeisel vir mynwerkers en skoeisel van die mynwerkerstipe (almal in Suid-Afrika gelooi); Kinderskoeisel, enige materiaal, alle nommers tot en met No. 1½ en alle leerpantoffels (vir mans, vroue en kinders)	57,89	63,68	59,12	65,03
(b) Alle ander materiale	65,56	72,11	66,95	73,65
[*Getalsverhouding.—Hoogstens een leerling mag in diens geneem word vir elke vier of gedeelte van vier gekwalifiseerde uitsnyers. „Gedeelte van vier" beteken 'n res van minstens een nadat die totale getal gekwalifiseerde uitsnyers deur vier gedeel is.*]				
(c) Boleersorteerder wat gradeer en/of sorteer volgens gehalte vir uitreiking aan uitsnyers; *(d)* Keuring van gesnyde leeronderdele vir gehalte	65,56	72,11	66,95	73,65
(ii) Voering-, binnesool- en passnywerk en/of klein tooisels aanbring en/of uitsnydings met 'n uitsnypers, revolusiepers, eksentriekpers of houthamer uitgepons; *Opmerking.*—'n Tooisel is 'n versiering wat nie 'n noodsaaklike deel van die skoen se boleer uitmaak nie. As daar 'n geskil ontstaan oor wat 'n „klein tooisel" uitmaak, is die Raad se beslissing, na ondersoek, finaal. Binnetonge en smal agterlissies uit afvalstukke sny vir buitenaatskoene van die Oxford- en Derbypatroon vir kinders, seuns en meisies; Vir alle ander snywerk van tonge en agterlissies moet daar betaal word teen die skaal van toepassing op die uitsny van materiaal ooreenkomstig paragraaf (i) hiervan; Bandjies volgens lengte uit deurlopende rolle of stringe vooraf vervaardigde materiaal sny	45,15	49,66	46,11	50,72
[*Getalsverhouding.—Daar mag hoogtens twee leerlinge teen lone ooreenkomstig die skaal voorgeskryf vir leerlinge in subklousule (1) (l) van hierdie Aanhangsel in diens geneem word vir elke gekwalifiseerde werknemer in hierdie seksie.*]				
(iii) Uitsnydings met 'n uitsnymasjien van die Westerntipe uitpons	40,07	44,08	40,92	45,02
(iv) Patrone uitreik; Splitsmasjien bedien	43,85	48,24	44,79	49,26
(v) Nommers stempel en/of verf; Acme-agterstukke aanbring	38,19	42,01	39,00	42,90

6. ANNEXURE A TO PART II OF THE AGREEMENT

(1) Substitute the following for clause 1 (A) to (N), inclusive, of Annexure A to Part II:

"ANNEXURE A TO PART II OF THE AGREEMENT

CLAUSE 1.—FOOTWEAR, NOT ELSEWHERE SPECIFIED

WAGES

	During the period ending 31.12.1980		Thereafter	
	Column A	Column B	Column A	Column B
	Per week	*Per week*	*Per week*	*Per week*
	R	R	R	R
(A) PATTERN DEPARTMENT				
(i) Qualified employees employed as pattern cutters producing original standards and hand grading to restrictions, and/or shoe draughtsmen	65,56	72,11	66,95	73,65
(ii) Qualified employees—				
(a) employed on hand grading but not to restrictions and not producing original standards				
(b) employed on grading machines	55,40	60,94	56,58	62,24
(c) employed on making original lining patterns from upper patterns, where no last copies or original standards are produced				
(iii) Qualified employees on any operation not specified in (i) and (ii) hereof.....	43,85	48,24	44,79	49,26
(B) CLICKING DEPARTMENT				
Qualified employees on:				
(i) Clicking and cutting uppers by hand or machine:				
(a) Vegetable or chrome split, vegetable or semichrome kip, suede chrome kip and vegetable tanned sheepskins and goatskins.....				
White full chrome kip for the production of whole-cuts, bluchers and veldschoens only, but excluding miners' and miners' type footwear (all South African tannage)	57,89	63,68	59,12	65,03
Children's work, any material, all sizes up to and including size 1½ and all leather slippers (men's, women's and children's).....				
(b) Any other materials.....	65,56	72,11	66,95	73,65
[*Ratio—For every four or part of four qualified clickers there may be employed not more than one learner.* *"Part of four" shall mean a remainder of not less than one after the total number of qualified clickers has been divided by four.*]				
(c) Upper leather sorter grading and/or sorting for quality for issue to clickers	65,56	72,11	66,95	73,65
(d) Examining of cut leather components for quality				
(ii) Lining, sock and fitting cutting, and/or small trimmings and/or cut-outs died out by clicking press, revolution press, eccentric press or mallet.....				
Note.—A trimming is a decoration not being an essential part of the shoe upper. In the event of any disputes as to what comprises a "small trimming", the Council's decision shall, after investigation, be final.				
Cutting from offal of inside tongues and narrow backstraps for children's, youths' and maids' stitchdowns of Oxford and Derby patterns	45,15	49,66	46,11	50,72
All other tongue and backstrap cutting shall be paid for at the rate applicable to clicking of the materials in terms of paragraph (i) hereof.....				
Strap cutting to length from continuous rolls or hanks of pre-prepared material.....				
[*Ratio.—For every qualified employee in this section there may be employed not more than two learners at wages in accordance with the scale laid down for learners in subclause (1) (i)* of this Annexure.]				
(iii) Cut-outs died out by Western type cut-out machine.....	40,07	44,08	40,92	45,02
(iv) Giving out patterns.....				
Operating splitting machine.....	43,85	48,24	44,79	49,26
(v) Size stamping and/or painting				
Applying acme-backing	38,19	42,01	39,00	42,90

University of Fort Hare
Together in Excellence

	Gedurende die tydperk eindigende 31.12.1980		Daarna	
	Kolom A	Kolom B	Kolom A	Kolom B
	Per week	*Per week*	*Per week*	*Per week*
	R	R	R	R
(C) STIKAFDELING				
Gekwalifiseerde werknemers in diens vir:				
(i) Puritan-masjienwerk	47,74	52,51	48,76	53,63
(ii) Die stik van leerstroke op boleer met buitesoolstikmasjiene				
(iii) Proefnaaimasjienwerk	45,15	49,66	46,11	50,72
(iv) Ander masjienwerk:				
(a) Alle stikwerk aan bas- en chroomgelooide splitleer, bas- en halfchroomgelooide kalfsvel-, suède- en chroomgelooide kalfsvelvoeringmasjienwerk				
Wit kalfsvel wat ten volle chroomgelooi is vir die vervaardiging van slegs eenstukleer-skoene, bluchers en velskoene, maar uitgesonderd skoeisel vir mynwerkers en skoeisel van die mynwerkerstipe (almal in Suid-Afrika gelooi)	37,10	40,81	37,89	41,68
(b) Werksaamhede in verband met ander soorte leer as dié in *(a)* gespesifiseer:				
Voorstukke vasstik				
Plat bindwerk met 'n masjien				
Bykomende rye op die voorstuk, parallel met die voorstukstikwerk, met 'n masjien stik				
Oorskoene masjineer (hele oorskoene)				
Fantasieskoene volgens die saamhoustelsel heeltemal met masjien gestik (alle soorte)				
Fantasiemasjienwerk volgens die saamhoustelsel, met inbegrip van krae, uitsnydings, belegsels en sierpatroonstikwerk sonder merkers	40,95	45,04	41,82	46,00
Randwerk of enige werksaamheid met natooimasjien, uitgesonderd Derbysykante van die Oxford- en Derbypatroon				
Voorstukke van skoene vasstik met hielstukke oor die voorstukke				
Bediener van vervoerbandkonsole wat individuele bedieners voer				
(c) werksaamhede, uitgesonderd dié in *(a)* en *(b)* hierbo gespesifiseer, met inbegrip van die aanbring van bindstukke vir Franse bindwerk op plat- of afwerkmasjien en die vasryg van twee boonste samestellende dele met die hand om 'n naat te vorm, insluitende keuring vir gehalte				
(d) Alle werksaamhede in verband met kinderskoeisel tot No. 1½				
Alle leerpantoffels (vir mans, vroue en kinders)				
Alle werksaamhede in verband met swart en bruin kalfsleer (uitgesonderd stikwerk aan oorskoene, fantasiewerk en werk aan skoeisel vir mynwerkers en/of skoeisel van die mynwerkerstipe)	37,10	40,81	37,89	41,68
(v) Vetergate maak, klinkwerk doen, perforeerwerk doen, skaaf, vou en bruineer met die hand of 'n masjien	40,95	45,04	41,82	46,00
(vi) Omdopping				
Omdraai van bindwerk				
Aanwerk van knope				
Die maak van knoopgate				
Vasrygwerk				
Handponswerk				
Die aanwerk van stutte en bande				
Naat-vryfwerk	37,10	40,81	37,89	41,68
Naatplatslaanwerk				
Strikke en gespes met die hand of 'n masjien vaswerk				
Syskermdrukwerk				
Tafelwerkers				
Die laai van ander stikvervoerders, maar uitgesonderd 'n bediener van 'n vervoerbandkonsole (wat individuele bedieners voer)				
(D) SOOL-EN-HAKAFDELING				
Klas 1-werksaamhede				
Gekwalifiseerde werknemers in diens:				
(i) Om sole uit leer te snij				
Om ongegradeerde en ongestempelde voorrade te sorteer, te ondersoek en te pas	62,97	69,27	64,31	70,74
Om gegradeerde engestempelde voorrade te sorteer en te ondersoek				

Fort Hare
Excellence

	During the period ending 31.12.1980		Thereafter	
	Column A	Column B	Column A	Column B
	Per week	*Per week*	*Per week*	*Per week*
	R	R	R	R
(C) CLOSING DEPARTMENT				
Qualified employees on:				
(i) Puritan machining	47,74	52,51	48,76	53,63
(ii) Stitching aprons on uppers on out-sole stitching machines				
(iii) Pilot machining	45,15	49,66	46,11	50,72
(iv) Other machining:				
(a) All closing operations on vegetable and chrome split, vegetable and semi-chrome kip, suede and chrome kip lining machining	37,10	40,81	37,89	41,68
White full chrome kip for the production only of whole-cuts, bluchers and veldschoens, but excluding miners' and miners' type footwear (all of South African tannage)				
(b) Operations on leathers other than those specified in *(a)*:				
Vamping	40,95	45,04	41,82	46,00
Flat binding by machine				
Machining additional rows of stitching on the vamp parallel to the vamp stitching				
Golosh machining (whole goloshes)				
Fancy shoes on the held-together system, machined through (all classes)				
Fancy machining on the held-together system, including collars, cut-outs, overlays and fancy pattern stitching without markers				
Running round or any operation on post-trimming machine, excluding Oxford and Derby pattern Derby-sides				
Vamping shoes with quarters over vamps				
Conveyor belt console operator feeding individual operators				
(c) Operations other than those specified in *(a)* and *(b)* above, including attaching binding for French binding on flat or post machine and including handlacing of two upper components to form a seam and including examining for quality				
(d) All operations on children's work up to size 1½	37,10	40,81	37,89	41,68
All leather slippers (men's, women's and children's)				
All operations on box hide and willow hide (excluding goloshing, fancy work and miners' and/or miners' type)				
(v) Eyeletting, riveting, perforating, skiving, folding and burnishing by machine or hand	40,95	45,04	41,82	46,00
(vi) Bagging	37,10	40,81	37,89	41,68
Turning of binding				
Button fastening				
Buttonholing				
Lacing				
Hand punching				
Staying and taping				
Seam rubbing				
Seam hammering				
Sewing on bows and buckles by hand or machine				
Silk screen printing				
Table-hands				
Loading other closing conveyors, but excluding a conveyor belt console operator (feeding individual operators)				
(D) ROUGH STUFF DEPARTMENT				
Class 1 Operations				
Qualified employees:				
(i) As sole cutters from leather	62,97	69,27	64,31	70,74
On sorting, examining and fitting up ungraded and unstamped stock				
On sorting and examining graded and stamped stock				

Fort Hare Publishing House
Pioneer in Excellence

	Gedurende die tydperk eindigende 31.12.1980		Daarna	
	Kolom A	Kolom B	Kolom A	Kolom B
	Per week	*Per week*	*Per week*	*Per week*
	R	R	R	R
(D) SOOL-EN-HAKAFDELING *(vervolg)*				
(ii) Om binnesole, verstywers, deurlopers, middelsole en neusverstywing uit ander leer as splitleer te sny, en om sole uit ander materiaal as leer te sny..... Vir die dunner maak van gefatsoeneerde rubbersole op 'n pers.....	55,40	60,94	56,58	62,24
[*Getalsverhouding.—Kyk subklousule (P).*]				
Klas II-werksaamhede				
Gekwalifiseerde werknemers in diens vir:				
(i) Groefsnywerk:				
Kantstrokies aan binnesole vasnaai.....	45,15	49,66	46,11	50,72
Ander werk.....	46,43	51,07	47,42	52,16
(ii) Perssnywerk, uitgesonderd dié in klas I.....				
(iii) Monteerwerk uit voorraade, afgesien daarvan of dit gesorteer en/of gegradeer is of nie.....				
Die aanbring van ribbes aan binnesole waaraan kantstrokies genaai is.....				
Klapsplitswerk.....				
Die aanbring van versterkings en bande.....				
Hak-vormwerk.....				
Die maak van hakke.....	43,85	48,24	44,79	49,26
Die pers van hakke.....				
Die inslaan van groot spykers.....				
Die afronding van sole en binnesole.....				
Die maak van groewe in sole, sole op 'n outomatiese masjien grof en dunner maak.....				
Die vul van punte.....				
[*Getalsverhouding.—Kyk subklousule (P).*]				
Klas III-werksaamhede				
Gekwalifiseerde werknemers in diens vir:				
Die oopsny van groewe.....				
Die bedekking van rande.....				
Die afwerk van rande.....				
Die bediening van 'n masjien wat die rande van sole outomaties voorberei voordat dit vasgesit word.....				
Buigwerk.....				
Die afwerk van binnesole.....				
Die maak van groewe in binnesole.....				
Die maak van gleuwe in binnesole.....				
Die merk van binnesole.....				
Die vasspyker van haklagies en/of hakstrokies.....	38,19	42,01	39,00	42,90
Die omkeer van rande.....				
Skuurwerk in perskamer.....				
Die aanmekaarsit van brugstukke.....				
Die giet van brugstukke.....				
Skaafwerk.....				
Die stempel van nommers.....				
Die giet van sole, binnesole en verstywers.....				
Die splits van sole en binnesole.....				
Bediening van soolgradeermasjien.....				
Die rofmaak van sole vir aanplakwerk.....				
Die aansmeer van rubberlym.....				
Verstywers vorm en was daaraan smeer.....				
Die bereiding van kantstrokies.....				
[*Getalsverhouding.—Kyk subklousule (P).*]				
(E) MAAKAFDELING				
Klas I-werksaamhede				
Gekwalifiseerde werknemers in diens vir:				
(i) Oortrekwerk, Consol-leeswerk en/of Littleway-leeswerk:				
(a) Werk in verband met kantstrokies, uitgesonderd kantstrokies met krammetjies vasgeheg.....	62,97	69,27	64,31	70,74

University of Fort Hare
Together in Excellence

	During the period ending 31.12.1980		Thereafter	
	Column A	Column B	Column A	Column B
	Per week	*Per week*	*Per week*	*Per week*
	R	R	R	R
(D) ROUGH STUFF DEPARTMENT *(continued)*				
(ii) As cutters of insoles, stiffeners, throughs, runners and puffs from leather other than splits, and sole cutters of material other than leather ..... On reducing shaped rubber soles on the press	55,40	60,94	56,58	62,24
[*Ratio.—See subclause (P).*]				
Class II Operations				
Qualified employees on:				
(i) Channelling:				
Welted insoles	45,15	49,66	46,11	50,72
Other work				
(ii) Press cutting operations other than those in Class I	46,43	51,07	47,42	52,16
(iii) Assembling from stock whether or not sorted and/or graded				
Attaching ribs to welted insoles				
Flap splitting				
Gemming and taping				
Heel breasting				
Heel building	43,85	48,24	44,79	49,26
Heel compressing				
Slugging				
Sole and insole rounding				
Sole grooving, sole roughening, and reducing on an automatic machine				
Tip filling				
[*Ratio.—See subclause (P).*]				
Class III Operations				
Qualified employees on:				
Channel opening				
Edge covering				
Edge reducing				
Automatic edge preparation machine operating for soles prior to attachment				
Flexing				
Insole feathering				
Insole grooving				
Insole slotting				
Insole marking				
Lift and/or rand tacking				
Lip turning				
Press room securing operations	38,19	42,01	39,00	42,90
Shank assembling				
Shank moulding				
Skiving				
Size stamping				
Sole, insole and stiffener moulding				
Sole and insole splitting				
Sole grading machine operating				
Sole roughening for stuck-on work				
Solutioning				
Stiffener waxing and crimping				
Welt preparation				
[*Ratio.—See subclause (P).*]				
(E) MAKING DEPARTMENT				
Class I Operations				
Qualified employees on:				
(i) Pulling over, Consol lasting and/or Littleway lasting:				
(a) Welted work other than staple welted work	62,97	69,27	64,31	70,74

University of Fort Hare
Together in Excellence

	Gedurende die tydperk eindigende 31.12.1980		Daarna	
	Kolom A	Kolom B	Kolom A	Kolom B
	Per week	*Per week*	*Per week*	*Per week*
	R	R	R	R
(E) MAAKAFDELING *(vervolg)*				
(b) Klinkwerk en/of klink- en rygwerk, uitgesonderd in verband met skoeisel vir mynwerkers of skoeisel van die mynwerkerstipe en militêre stewels...	55,40	60,94	56,58	62,24
(c) Gekombineerde oortrekwerk en leeswerk aan voorkante	62,97	69,27	64,31	70 74
(d) Alle ander grade				
(ii) Leeswerk aan beddings (slegs neuse):				
(a) Werk in verband met kantstrokies, uitgesonderd kantstrokies met krammetjies vasgesit	62,97	69,27	64,31	70,74
(b) Ander werk				
(iii) Leeswerk aan hakbeddings en kante met enige masjien:				
(a) Werk in verband met kantstrokies, uitgesonderd kantstrokies met krammetjies vasgesit	50,22	55,24	51,29	56,42
(b) Ander werk				
Opmerking.—As daar van 'n leesmasjienbediener vereis word om die hakbeddings en/of kante en neuse van stewels en skoene te lees, moet die hoogste loon aan hom betaal word en mag geen differensiële lone toegepas word nie.				
As daar van 'n oortrek- en/of Consol-leeswerkmasjienbediener vereis word om op 'n bepaalde dag oortrek- en leeswerk aan neuse, hakbeddings en/of kante te doen, moet die hoogste loon aan hom betaal word en mag geen differensiële lone toegepas word nie.				
(iv) Die vassit van hele sole met 'n krammasjien	45,15	49,66	46,11	50,72
Randsole vaskram				
(v) Die vasnaai van kantstrokies	62,97	69,27	64,31	70,74
(vi) Ruwe afronding:				
(a) Werk in verband met kantstrokies, uitgesonderd kantstrokies met krammetjies vasgesit				
(b) Ander werk				
(vii) Die vasnaai van sole	62,97	69,27	64,31	70,74
(viii) Die vasstik van sole:				
(a) Werk in verband met kantstrokies, uitgesonderd kantstrokies met krammetjies vasgesit				
(b) Buitesole aan lopers van Indiërsandale op No. 6-tuigstikmasjien stik.....	55,40	60,94	56,58	62,24
(c) Ander werk	62,97	69,27	64,31	70,74
(ix) *(a)* Boleer aan sole op lees vaskram				
(b) Boleer aan sole op lees met gare vaswerk				
(c) Neuse van buitenaatskoene vorm	45,15	49,66	46,11	50,72
(d) Buitesoolbedekkings met 'n masjien vee				
(e) Leeswerk op 'n Kamborian-masjien				
(x) Klopwerk:				
(a) Werk in verband met kantstrokies, uitgesonderd kantstrokies met krammetjies vasgesit	52 81	58,10	53,94	59,33
(b) Skoeisel vir mynwerkers en skoeisel van die mynwerkerstipe en stewels van die militêre tipe	57,89	63,68	59,12	65,03
„Stewels van die militêre tipe" beteken die swaar tipe stewel wat klopwerk vereis wat net so veeleisend is as klopwerk in verband met militêre stewels wat op kontrak gemaak word.				
(c) Ander werk	52,81	56,10	53,94	59,33
Opmerking.—Geen werknemer onder die ouderdom van 18 jaar mag klopwerk verrig nie.				
(xi) Keuring	62,97	69,27	64,31	70,74
[*Getalsverhouding.—Klas I-werksaamhede Maakafdeling*]				
(i) Vir elke drie of gedeelte van drie gekwalifiseerde werknemers wat oortrekwerk, masjienleeswerk en/of leeswerk aan beddings (uitgesonderd leeswerk aan hakbeddings en kantstukke), naaiwerk aan kantstrokies en/of sole, stikwerk en ruwe afrondingswerk verrig, mag daar hoogstens een leerling in diens geneem word.				
(ii) Vir elke drie of gedeelte van drie gekwalifiseerde werknemers wat ander werksaamhede verrig as dié in (i) vermeld, mag een leerling in diens geneem word.				
(iii) „Gedeelte van drie" in (i) en (ii) bedoel, beteken 'n res van minstens twee nadat die totale getal gekwalifiseerde werknemers deur drie gedeel is.				
Klas II-werksaamhede				
Gekwalifiseerde werknemers wat—				
(i) sole op boleer in posisie plaas met vooraf afgewerkte kantstrokie met 'n verlengde rand	47,74	52,51	48,76	53,63
(ii) vooraf getooide sole in posisie plaas voordat en/of wanneer dit met persvasgelym word	46,43	51,07	47,42	52,16

University of Fort Hare

CONT

University of Fort Hare
Together in Excellence

	During the period ending 31.12.1980		Thereafter	
	Column A	Column B	Column A	Column B
	Per week	*Per week*	*Per week*	*Per week*
	R	R	R	R
(E) MAKING DEPARTMENT *(continued)*				
(b) Riveted and/or riveted and stitched work, excluding miners' and miners' type and army boots	55,40	60,94	56,58	62,24
(c) Combined pulling over and forepart lasting *(d)* All other grades	62,97	69,27	64,31	70,74
(ii) Bed lasting (toes only): *(a)* Welted work other than staple welted work *(b)* Other work	62,97	69,27	64,31	70,74
(iii) Lasting of seats and sides by any machine: *(a)* Welted work other than staple welted work *(b)* Other work *Note.*—If a lasting machine operator is required to last boots or shoes through (i.e. seats and/or sides and toes), he shall be paid at the highest rate and no differential rates may be applied. If a pullover and/or Consol lasting machine operator is required on any one day to work on pulling over and lasting toes, seats and/or sides, he shall be paid at the highest rate and no differential rate shall be applied.	50,22	55,24	51,29	56,42
(iv) Complete sole attaching by staple machine Staple welt attaching	45,15	49,66	46,11	50,72
(v) Welt sewing	62,97	69,27	64,31	70,74
(vi) Rough rounding: *(a)* Welted work other than staple welted work *(b)* Other work (vii) Sole sewing (viii) Sole stitching: *(a)* Welted work other than staple welted work	62,97	69,27	64,31	70,74
(b) Stitching outer soles to runners on Indian sandals on a No. 6 harness stitching machine	55,40	60,94	56,58	62,24
(c) Other work	62,97	69,27	64,31	70,74
(ix) *(a)* Stitchdown staple lasting *(b)* Stitchdown thread lasting *(c)* Stitchdown toe forming *(d)* Wiping platform covers by machine *(e)* Lasting operations on a Kamborian machine	45,15	49,66	46,11	50,72
(x) Pounding: *(a)* Welted work other than staple welted work	52,81	58,10	53,94	59,33
(b) Miners' and miners' type and army type boots "Army type boots" means the heavy type of boot involving the same strenuous pounding as contract army boots.	57,89	63,68	59,12	65,03
(c) Other work *Note.*—No employee under the age of 18 years may be employed upon pounding.	52,81	58,10	53,94	59,33
(xi) Examining	62,97	69,27	64,31	70,74

[*Ratios.—Class I Operations: Making Department.*]

(i) For every three or part of three qualified employees in pulling over, machine and or bed lasting (excluding seat and side lasting), welt and/or sole sewing, stitching and rough rounding, there may be employed not more than one learner.

(ii) For every three or part of three qualified employees on operations other than those referred to in (i), one learner may be employed.

(iii) "Part of three" referred to in (i) and (ii) means a remainder of not less than two after the total number of qualified employees has been divided by three.

Class II Operations

Qualified employees on: (i) sole positioning on upper with pre-finished extended welt edge	47,74	52,51	48,76	53,63
(ii) positioning of pre-trimmed soles prior to and/or with stuck-on press	46,43	51,07	47,42	52,16

University of Fort Hare
Together in Excellence

	Gedurende die tydperk eindigende 31.12.1980		Daarna	
	Kolom A	Kolom B	Kolom A	Kolom B
	Per week	*Per week*	*Per week*	*Per week*
	R	R	R	R
(iii) vaslymwerk verrig:				
Sole tegelykertyd op boleer en pers in posisie plaas				
Sole op voorkant en hakbedding van beleer in posisie plaas voordat dit gepers word				
'n Pers bedien, waar sole vooraf in posisie geplaas is (kyk klas III vir vaspyker van slegs hakbedding)				
Sole met 'n ander masjien as 'n snelstikmasjien aanmekaarstik voordat dit aan die skoen vasgeheg word maar uitgesonderd skoeisel vir mynwerkers en skoeisel van die mynwerker tipe				
Buitenaatskoene aanmekaarsit of oortrek				
Dikkopspykers met die hand of 'n masjien inslaan				
Neusplate en hakskerms met die hand of 'n masjien aanbring				
Hakke aansit				
Soolknoppies en dwarsstrokies aan voetbal tewels sit				
Gelykmaking met die hand, uitgesonderd buitenaatskoene				
Binnenate afwerk				
Voegwerk (voering skoonmaak en boleer oor voeë vaspyker)				
Losspyker of vaspen van voorkante en middelstukke				
Louis-klappe met die hand afwerk	43,85	48,24	44,79	49,26
Gelykmaking met 'n masjien				
Vasskroefwerk				
Masjiengenaaide, geklinkte en/of geklinkte en gestikte sole vassit				
Sole aanplak met kleefmiddels deur 'n masjien verhit				
Hoeke van verstywers maak en verstywers vaspyker				
Steke skei				
Draadspykerwerk				
Hakbeddings vorentoe vaspyker				
Rofmaak van boleer				
Middelstukke kleiner maak nadat dit genaai is				
Houthakke pas				
Kantstrokies uitklip en skaaf				
Draaiwerk aan kantstrokies				
Kantstrokies met 'n masjien aan hakstrokies heg				
Groot spykers inslaan en veelvuldige inslaan van groot spykers				
Hakkantstrokies of sierstrokies, hetsy vertikaal of horisontaal of 'n kombinasie daarvan, met die hand of 'n masjien vasheg				
Voorgietwerk aan agterkant en middelstuk				
(iv) Vulkaniseerproses:				
Vulkanisering van sole aan geloeade boleer				
Kantrokies met 'n masjien aan hakstrokies heg				
Sooleenhede giet				
Klas III-werksaamhede				
Gekwalifiseerde werknemers in diens vir:				
Klopwerk				
Aanbring van verhardingsharse aan neusverstywing met 'n masjien				
Vul van ondersole				
Toemaak van groewe en oplig van rande				
Voer van spykers aan masjien wat hakke vassit				
Gelykmaak van buitenate met die hand				
Oortrek van hakke				
Insit van verstywers en neusverstywing				
Die klamp van Louis-hakklappe, die gladmaak van Louis-hakke				
Die afwerking van Louis-hakklappe met 'n masjien				
Aweregse bevestiging van boleer op hakbedding				
Vaspyker en/of vaspen van hakbeddings	38,19	42,01	39,00	42,90
Afronding van hakbeddings				
Aansit van brugstukke				
Sool aan hakbedding spyker vir vasplakproses				
Aansmeer van rubberlym, bevogtiging en vasplak				
Sortering van dikkopspykers				
Soollêwerk in verband met kantstrokies en/of rubbersole				
Vaspyker of pas van deurlopers en middelsole aan sole				
Uittrek van spykers				
Vaspyker van onderwerk aan lees				
Inslaan van spykers in agterstukke voordat dit oorgetrek word op skoene met toe agterstukke, waar spykers hoogstens 25 mm van die middel van die agterkant van die hakbedding geplaas word (kyk tekening)				

University of Fort Hare
Together in Excellence

	During the period ending 31.12.1980		Thereafter	
	Column A	Column B	Column A	Column B
	Per week	*Per week*	*Per week*	*Per week*
	R	R	R	R
(iii) stuck-on process work: Sole positioning on upper and press, operating in one operation Sole positioning on upper at forepart and seat before pressing Press operating with sole previously positioned (see Class III for tacking at seat only) Stitching soles together by machine other than the rapid stitcher prior to being attached to footwear, but excluding miners' and miners' type footwear Stitchdown assembling or pulling over stitchdown work Hobnailing by hand or machine Putting on toe plates and heel tips by hand or machine Heel attaching Football bootstudding and barring Hand levelling other than stitchdown Inseam trimming Jointing (clearing linings and tacking upper down over joints) Loose nailing or pegging foreparts and waists Louis flap trimming by hand Machine levelling Screwing Sole attaching, machine-sewn, riveted and/or riveted and stitched work Sole adhesive heat activating by machine Stiffener cornering and tacking Stitch separating String nailing Tacking forward of heel seats Upper roughening Waist reducing after being sewn Woodheel fitting Welt butting and skiving Welt wheeling Rand welting by machine Slugging and gang slugging Attaching rand welting or foxing, whether vertical or horizontal or a combination thereof, by hand or machine Back part and waist pre-moulding (iv) Vulcanising process: Vulcanising soles to lasted uppers Rand welting by machine Moulding of sole units	43,85	48,24	44,79	49,26
Class III Operations Qualified employees on: Beating Application by machine of hardening resins to puffs Bottomfilling Channel closing and edge raising Feeding nails to heeling machine Hand levelling of stitchdowns Heel covering Inserting stiffeners and puffs Louis heel flap clamping, Louis heel slicking Louis heel flap trimming by machine Reverse seat moulding for stitchdowns Seat nailing and/or pegging Seat rounding Shank attaching Sole tacking at seat for stuck-on process Solutioning, damp and pasting Sorting hobs Sole laying welted work and/or rubber soles Sole tacking or sole fitting throughs and runners Tack pulling Tacking bottom stock to lasts Tacking over backs before pulling over on closed back shoes, tacks being placed not further than 25 mm from middle of back of heel seat (see illustration)	38,19	42,01	39,00	42,90

University of Fort Hare
Together in Excellence

	Gedurende die tydperk eindigende 31.12.1980		Daarna	
	Kolom A	Kolom B	Kolom A	Kolom B
	Per week	*Per week*	*Per week*	*Per week*
	R	R	R	R
(E) MAAKAFDELING *(vervolg)*				
	38,19	42,01	39,00	42,90
Inslaan van spykers in sandaal-agterstukke, waar geen verstywers ingesit word nie				
Vasspyker van bostukke aan buitenaatskoene en sandale				
Alle ander draadkramwerk				
Vaskram van boleer nadat kantstukke gelees is				
Afwerk van boleer				
Pastilleer en granuleer van plastiek				
Fatsoeneer van agterkante				
[*Getalsverhouding—Kyk subklousule (P).*]				
Handleeswerksaamhede				
Gekwalifiseerde werknemers in diens vir:				
(i) Oortrekwerk met die hand en/of handleeswerk aan skoeisel vir mynwerkers of skoeisel van die mynwerkerstipe	55,40	60,94	56,58	62,24
Opmerking.—Daar is geen kwantum of aanvullende loon vir handleeswerk aan skoeisel vir mynwerkers of skoeisel van die mynwerkerstipe nie.				
(ii) Ander oortrekwerk met die hand en/of handleeswerk				
Handleeswerk aan hakbeddings van buitenaatskoene				
Handleeswerk by die vervaardiging van houtsoolskoene	43,85	48,24	44,79	49,26
Bankwerk soos klinkwerk, die aansit van sole en/of hakke met die hand, met inbegrip van rubberhielstukpunte				
Vasspyker van leerbandjies aan houtsole				
[*Getalsverhouding.—Hoogstens een leerling mag in diens geneem word vir elke gekwalifiseerde werknemer wat werksaamhede gespesifiseer in (i) en (ii) verrig.*]				
(F) AFWERKAFDELING				
Klas I-werksaamhede				
Gekwalifiseerde werknemers in diens vir:				
(i) Glasony van rande:				
(a) Klinkwerk en/of klink- en stikwerk, maar uitgesonderd aan skoeisel vir mynwerkers en skoeisel van die mynwerkerstipe en militêre stewels				
Rubbersole en rubberkomposisiesole				
Kinderskoeisel, alle nommers tot en met No. 1½	55,40	60,94	56,58	62,24
Alle pantoffels (vir mans, vroue en kinders)				
Buitenaatskoeisel uit swart- en bruinkalfsleer vervaardig				
(b) Alle ander werk	62,97	69,27	64,31	70,74
(ii) Afwerk van rande:				
(a) Klinkwerk en/of klink- en stikwerk, maar uitgesonderd aan skoeisel vir mynwerkers en skoeisel van die mynwerkerstipe en militêre stewels				
Deurloop-middelsole				
Middelstukke en/of bostukke				
Kinderskoeisel, alle nommers tot en met No. 1½	45,15	49,66	46,11	50,72
Alle pantoffels (vir mans, vroue en kinders)				
Buitenaatskoeisel uit swart- en bruinkalfsleer vervaardig				
(b) Outomatiese randafwerkmasjien, alle grade	55,40	60,94	56,58	62,24
(c) Alle ander werk				
(iii) Afwerk van hakke	45,15	49,66	46,11	50,72
(iv) Keuring	62,97	69,27	64,31	70,74
[*Getalsverhouding.—Kyk subklousule (P).*]				
Klas II-werksaamhede				
Gekwalifiseerde werknemers in diens vir:				
Betingslagwerk met die hand of 'n masjien	43,85	48,24	44,79	49,26

IN LUMINE TUO VIDEBIMUS LUMEN
University of Fort Hare
Together in Excellence

	During the period ending 31.12.1980		Thereafter	
	Column A	Column B	Column A	Column B
	Per week	*Per week*	*Per week*	*Per week*
	R	R	R	R
(E) MAKING DEPARTMENT *(continued)*				
Tacking over sandal backs where no stiffener is inserted	38,19	42,01	39,00	42,90
Tacking top pieces on stitchdowns and sandals				
All other wire grip tacking				
Upper stapling after lasting sides				
Upper trimming				
Plastic pelletising and granulating				
Back part moulding				
[*Ratio.—See subclause (P).*]				
Hand-lasting operations				
Qualified employees on:				
(i) Pulling over by hand and/or hand-lasting miners' or miners' type footwear	55,40	60,94	56,58	62,24
Note.—There shall be no quantum or supplementary wage allowed for the hand-lasting of miners' and miners' type footwear.				
(ii) Other pulling over by hand and/or hand-lasting				
Hand-lasting seats of stitchdowns				
Hand-lasting in the manufacture of clogs				
Bench work such as riveting, putting on soles and/or heels by hand, including rubber quarter tips	43,85	48,24	44,79	49,26
Tacking leather straps to wooden soles				
[*Ratio.—There may be employed not more than one learner to each qualified employee on operations specified in (i) and (ii).*]				
(F) FINISHING DEPARTMENT				
Class I Operations				
Qualified employees on:				
(i) Edge trimming:				
(a) Riveted and or riveted and stitched work, but excluding miners' and miners' type and army boots				
Rubber and rubber composition soles	55,40	60,94	56,58	62,24
Children's footwear, all sizes up to and including size 1½				
All slippers (men's, women's and children's)				
Stitchdown footwear produced from box hide and willow hide				
(b) All other work	62,97	69,27	64,31	70,74
(ii) Edge setting:				
(a) Riveted and/or riveted and stitched work, but excluding miners' and miners' type and army boots				
Through runners				
Waist and/or top pieces				
Children's footwear, all sizes up to and including size 1½	45,15	49,66	46,11	50,72
All slippers (men's, women's and children's)				
Stitchdown footwear produced from box hide and willow hide				
(b) Automatic edge-setting machine, all grades	55,40	60,94	56,58	62,24
(c) All other work				
(iii) Heel trimming	45,15	49,66	46,11	50,72
(iv) Examining	62,97	69,27	64,31	70,74
[*Ratio.—See subclause (P).*]				
Class II Operations				
Qualified employees on:				
Bitting by hand or machine	43,85	48,24	44,79	49,26

University of Fort Hare
Leader in Excellence

	Gedurende die tydperk eindigende 31.12.1980		Daarna	
	Kolom A	Kolom B	Kolom A	Kolom B
	Per week	*Per week*	*Per week*	*Per week*
	R	R	R	R
(F) AFWERKAFDELING *(vervolg)*				
Skuur van ondersole Skuur van hakke Spuitverfwerk aan hakke Uitholwerk Volledige afwerking met die hand Gladsny van bostukke Werk met bunkwiel Stryk van Louis-klappe Platvryf van rande en ondersole, herstel van gebreke aan rande, hakke, middelstukke en hoeke van ondersole en afwerk van rande Hakbeddingdraaiwerk Merk van rand van voorkant of middelstuk van sool met 'n masjien of handgereedskap, hetsy voor of nadat ondersole met was gesmeer of gepoleer is (E. „Top ironing") Kantstrookdraaiwerk	43,85	48,24	44,79	49,26
[*Getalsverhouding.—Kyk subklousule (P).*]				
Klas III-werksaamhede				
Gekwalifiseerde werknemers in diens vir: Borsel, opstop en/of bruinering Gedrewe werk op sole doen Skuurwerk met die vingers Afronding van hakvoorlyn Inkwerk, beitswerk, waswerk en bevogtiging Die insit, uittrek en wegbêre van leeste Uitholwerk (verwydering van lip rondom onderkant van sool) Die afvryf van rande en ondersole Eksudaatverwydering en/of naatpoetsing Vervoerband laai	38,19	42,01	39,00	42,90
[*Getalsverhouding.—Kyk subklousule (P).*]				
(G) SKOENKAMER				
Gekwalifiseerde werknemers in diens vir: Wassmering Keuring	52,81	58,10	53,94	59,33
Herstelwerk aan verlakte skoeisel Bosseleer- en/of stempelwerk Verpakking in dose Afwerking en/of sortering volgens nommers Afwerking met 'n sproeispuit Poleerwerk en skoonmaak met die hand Strykwerk Etikettering Voeringafwerking Stempel van nommers op skoeisel Insit van binnesole Stempel van beskrywings en nommers op etikette Hielstukvorming met 'n masjien Gladmaak van binnesole voordat dit ingesit of in dose verpak word	37,10	40,81	37,89	41,68
(H) MEULKAMERWERKSAAMHEDE				
Gekwalifiseerde werknemers in diens vir: (i) Groep 5: Bediening van 'n kalandermasjien Lotte massameet en chemikalieë bymekaarmaak Bediening van uitpersmasjien Bediening van 'n oop mengmeul met 'n wydte van minstens 1,52 m Bediening van 'n binnemenger	39,89	43,88	40,74	44,81
(ii) Groep 4: Rubber volgens maat in plaatplatblokke vorm (rekmengsel) Bediening van 'n oop mengmeul met 'n wydte van minder as 1,52 m maar minstens 1,01 m Mengsel warmmaak op oop meul Bediening van 'n hidroulieese pers	37,10	40,81	37,89	41,68

IN LUMINE TUO VIDEBIMUS LUMEN
University of Fort Hare
Together in Excellence

	During the period ending 31 12 1980		Thereafter	
	Column A	Column B	Column A	Column B
	Per week	*Per week*	*Per week*	*Per week*
	R	R	R	R
(F) FINISHING DEPARTMENT *(continued)*				
Bottom scouring Heel scouring Heel spraying Ploughing out Complete finishing by hand Top piece trimming Bunk wheeling Louis flap ironing Rubbing down of edges and bottoms and repairing of defects in edges, heels, waists, corners of bottoms and feather of edge Seat wheeling Top ironing i.e. marking edge of forepart or waist of sole by machine or by hand tool whether before or after bottoms are faked and polished Welt wheeling	43,85	48,24	44,79	49,26
[*Ratio.—See subclause (P).*]				
Class III Operations				
Qualified employees on: Brushing, padding and/or burnishing Crow wheeling Finger scouring Heel-breast cornering Inking, staining, waxing and damping Inserting, slipping and putting away lasts Ploughing (removing the scarf round underedge of sole) Rubbing off edges and bottoms Spew and/or flash trimming Conveyor belt loading	38,19	42,01	39,00	42,90
[*Ratio.—See subclause (P).*]				
(G) SHOE ROOM				
Qualified employees on: Faking Examining	52,81	58,10	53,94	59,33
Patent repairing Embossing and/or stamping Boxing Dressing and/or sizing Dressing by spray gun Hand polishing and cleaning Ironing Labelling Lining trimming Size stamping on footwear Socking Stamping descriptions and sizes on labels Quarter forming by machine Smoothing insole before socking or boxing	37,10	40,81	37,89	41,68
(H) MILL-ROOM OPERATIONS				
Qualified employees on: (i) Group 5: Calender operating Batch mass-measuring and assembling of chemicals Operating extruding machine Operating an open mixing mill with a width of not less than 1,52 m Operating internal mixer	39,89	43,88	40,74	44,81
(ii) Group 4: Slabbing sheet rubber to gauge (stretching compound) Operating an open mixing mill with a width of less than 1,52 m but not less than 1,01 m Warming compound on open mill Hydraulic press operating	37,10	40,81	37,89	41,68

IN VIDE LUMINE BIMUS
University of Fort Hare
Together in Excellence

	Gedurende die tydperk eindigende 31.12.1980		Daarna	
	Kolom A	Kolom B	Kolom A	Kolom B
	Per week	*Per week*	*Per week*	*Per week*
	R	R	R	R
(H) MEULKAMERWERKSAAMHEDE *(vervolg)*				
(iii) Groep 3: Sole en hakke uitreik; Ru-stukke met 'n pers uitsny (uitsnywerk); Bediening van 'n outoklaaf; Massameter bystaan; Gietvorms naspan; Bediening van 'n oop mengmoul met 'n wydte van minder as 1,01 m	35,24	38,77	35,99	39,59
(iv) Groep 2: Mengsel fynmaak, beplaat, kraak of breek; Fynskuur- of afskuurmasjienwerksaamhede; Rubber in kalander voer (rekmengsel voer); Afvalmateriaal met masjien maal; Gietvorms skoonmaak	31,53	34,68	32,20	35,42
(v) Groep 1: Afwerking; Ru-stukke volgens vasgestelde standaarde sny en massameet; Uitpers in bakke; Bale sny; Chemikalieë, fyngeskuurde en gemaalde stukke sif; Bale sjabloneer of merk; Poeier aanwend; Sole en hakke verpak; Granulering; Kalanderbediener bystaan; Indoopmasjien bedien	29,70	32,67	30,33	33,36
[*Getalsverhouding.—Vir elke drie gekwalifiseerde werknemers in diens in hierdie seksie mag daar hoogstens een leerling in diens geneem word.*]				
(I) HOËFREKWENSIESMEEWERK				
Gekwalifiseerde werknemers in diens vir:				
(i) Hoëfrekwensiesmeewerk, die bosseleer van vooraf gesnyde boleer	40,95	45,04	41,82	46,00
(ii) Hoëfrekwensiesmeewerk, bosselering saam met die sny van boleer (snysmeewerk)	65,56	72,11	66,95	73,65
(iii) Hoëfrekwensiesmeewerk, die bosseleer van binnesole en ander komponente	37,10	40,81	37,89	41,68
(iv) Hoëfrekwensiesmeewerk, saam met die sny van binnesole en ander komponente	45,15	49,66	46,11	50,72
[*Getalsverhouding.—Vir elke twee gekwalifiseerde werknemers in diens in hierdie seksie mag daar hoogstens een leerling in diens geneem word.*]				
(J) VLOEIVORMINGSWERK				
Gekwalifiseerde werknemers in diens vir: (i) Die vloeivorming van vooraf gesnyde boleer; (ii) Die vloeivorming van vooraf gesnyde binnesole; (iii) Vloeivormingswerk waar die boleer uiteindelik in vloeibare vorm aangebied word; (iv) Kleuraanwending aan vorms voor die vloeivormingswerk; (v) Vormvervaardiging van vorms vir vloeivormingswerk uit silikoonrubber of enige ander geskikte materiaal	40,95	45,04	41,82	46,00
[*Getalsverhouding.—Vir elke twee gekwalifiseerde werknemers in diens in hierdie seksie mag daar hoogstens een leerling in diens geneem word.*]				
(K) INSPUITGIET OF STORT VAN STOWWE WAT VIR VERSOOLWERK EN VIR DIE OMBOU VAN EENHEDE GEBRUIK WORD				
Gekwalifiseerde werknemers in diens vir: Inspuitgiet van eenhede aan boleer wat op 'n lees vaggewerk is of wat met 'n tou aan 'n lees vasgewerk is of van sooleenhede:				
(a) Waar een werknemer met 'n inspuitgietmasjien werksaam is	43,85	48,24	44,79	49,26
(b) Waar twee werknemers met 'n inspuitgietmasjien werksaam is, moet elkeen soos volg betaal word	43,85	48,24	44,79	49,26
(c) Waar meer as twee werknemers met 'n inspuitgietmasjien werksaam is, moet elkeen soos volg betaal word	38,19	42,01	39,00	42,90
[*Getalsverhouding.—Vir elke twee gekwalifiseerde werknemers in diens in hierdie seksie mag daar hoogstens een leerling in diens geneem word.*]				

University of Fort Hare
Together in Excellence

	During the period ending 31.12.1980		Thereafter	
	Column A	Column B	Column A	Column B
	Per week	*Per week*	*Per week*	*Per week*
	R	R	R	R
(H) MILL ROOM OPERATIONS *(continued)*				
(iii) Group 3: Issuing soles and heels; Press cutting blanks (clicking); Attending autoclave; Assisting mass-measurer; Mould checking; Operating an open mixing mill with a width of less than 1,01 m	35,24	38,77	35,99	39,59
(iv) Group 2: Masticating, sheeting out, cracking or breaking compound; Buffing of scouring machine operations; Feeding rubber into calender (feeding stretchers); Grinding scrap by machine; Mould cleaning	31,53	34,68	32,20	35,42
(v) Group 1: Trimming; Blank cutting and mass-measuring to fixed standards; Extruding into trays; Bale cutting; Sieving chemicals, buffings and grindings; Stenciling or marking bales; Applying powder; Packing soles and heels; Granulating; Assisting calender operator; Dipping machine	29,70	32,67	30,33	33,36
[*Ratio.—For every three qualified employees employed in this section not more than one learner may be employed.*]				
(I) HIGH-FREQUENCY WELDING				
Qualified employees on:				
(i) High-frequency welding, embossing pre-cut uppers	40,95	45,04	41,82	46,00
(ii) High-frequency welding, embossing combined with cutting of uppers (cut-welding)	65,56	72,11	66,95	73,65
(iii) High-frequency welding, embossing of socks and other components	37,10	40,81	37,89	41,68
(iv) High-frequency welding, combined with cutting of socks and other components	45,15	49,66	46,11	50,72
[*Ratio.—For every two qualified employees employed in this section not more than one learner may be employed.*]				
(J) FLOW MOULDING				
Qualified employees on: (i) Flow moulding, pre-cut uppers; (ii) Flow moulding, pre-cut socks; (iii) Flow moulding where eventual upper is presented in liquid form; (iv) Colour application to moulds prior to flow moulding; (v) Mould making of moulds for flow moulding out of silicone rubber or any other suitable materials	40,95	45,04	41,82	46,00
[*Ratio.—For every two qualified employees employed in this section not more than one learner may be employed.*]				
(K) INJECTION MOULDING OR POURING OF ANY MATERIALS USED FOR SOLING AND UNIT CONVERTING				
Qualified employees on:				
Injection moulding of units to lasted uppers or string-lasted uppers or of sole units:				
(a) Where one employee is employed on an injection moulding machine	43,85	48,24	44,79	49,26
(b) Where two employees are employed on an injection moulding machine, each shall be paid	43,85	48,24	44,79	49,26
(c) Every employee in excess of two, employed on an injection moulding machine, shall be paid	38,19	42,01	39,00	42,90
[*Ratio.—For every two qualified employees employed in this section not more than one learner may be employed.*]				

University of Fort Hare
Together in Excellence

	Gedurende die tydperk eindigende 31.12.1980		Daarna	
	Kolom A	Kolom B	Kolom A	Kolom B
	Per week	*Per week*	*Per week*	*Per week*
	R	R	R	R
(L) TOULEESWERK AAN SKOEISEL MET OF SONDER VOERING DEUR MET DIE HAND TE TREK OF MET BEHULP VAN ENIGE ANDER TOESTEL				
Gekwalifiseerde werknemers in diens vir:				
(i) Touleeswerk aan boleer van doekmateriaal	43,85	48,24	44,79	49,26
(ii) Touleeswerk aan sintetiese boleer				
[*Getalsverhouding.—Vir elke twee gekwalifiseerde werknemers in diens in hierdie sektie mag daar hoogstens een leerling in diens geneem word.*]				
(M) HOUTEENHEIDVERVAARDIGING				
Werksaamhede waarvoor daar in geen ander afdeling van klousule 1 van Aanhangsel A van Deel II voorsiening gemaak word nie:				
(a) Vervaardiging van oorgetrekte of onoorgetrekte houthakke (insluitende die prosessering van gelamelleerde gelaagde oortreksels)				
Gekwalifiseerde werknemers in diens vir				
(i) Masjienopstelwerk om die outomatiese of halfoutomatiese werking van enige masjien in hierdie afdeling te verseker	46,43	51,07	47,42	52,16
(ii) Die sny van ru-stukke voor lamellering by die voorbereiding van gelaagde hakoortreksels				
(iii) Die skuur, sementering, in posisie plaas en pers van ru-stukke voor die sny of sny met 'n guillotine van gelaagde hakoortreksels	38,19	42,01	39,00	42,90
(iv) Die sny of sny met 'n guillotine van gelamelleerde ru-stukke om hakoortrekmateriaal te produseer	46,43	51,07	47,42	52,16
(v) Die sny van hakoortreksels volgens 'n patroon uit gelaagde hakoortrekmateriaal				
(vi) *(aa)* Die dwarssaag van hout in lengtes	38,19	42,01	39,00	42,90
(ab) Die vorming van hakke en hakvoorlyne, met gebruikmaking van maatvorms en/of setmate en/of leirame				
(ac) Sny of skuur om die helling van hakke reg te kry, met gebruikmaking van maatvorms en/of setmate en/of leirame				
(ad) Die uithol van hakke om haakbeddings aan te sit				
(vii) Die sementering van hakke en hakoortreksels				
(viii) Hakoortreksels aan hakke vasheg („spotting") en vaspers				
(ix) Die afwerk van hakoortreksels				
(x) Die vassit van bostukke	43,85	48,24	44,79	49,26
(b) Die vervaardiging van houteenhede met of sonder hakke.				
Gekwalifiseerde werknemers in diens vir:				
(i) Die selekteer en/of skaaf van rou hout	38,19	42,01	39,00	42,90
(ii) Die meet, merk en saag van hout in vereiste lengtes				
(iii) Die merk van boonste en kantaansig vir profielsny van eenheid				
(iv) Die sny en fasoeneer uit hout van 'n gekombineerde eenheid wat 'n voetvormige basis vorm en die sny van fantasieuitsnydings op die basis	43,85	48,24	44,79	49,26
(v) Die sny of uitskaaf van 'n rand gedeeltelik of heeltemal rondom 'n houteenheid om leeswerkrand te versink				
(vi) Die sementeer of rubberlym en lamineer van twee of meer stukke hout om finale substansie te vermeerder	38,19	42,01	39,00	42,90
(vii) Die plaas en pers van vooraf afgewerkte of onafgewerkte sole aan houteenhede	43,85	48,24	44,79	49,26
(viii) Die vasgom met rubberlym of sementeer en vassit van hakstukke aan sole voor vassit aan houteenhede mits sodanige stukke nie die substansie van die sole oorskry nie	38,19	42,01	39,00	42,90
(ix) Die vassit van bostukke aan hakke	43,85	48,24	44,79	49,26
(x) *(aa)* Die skuur van eenhede met 'n outomatiese masjien voor of na die vassit van die sole	38,19	42,01	39,00	42,90
(ab) Die skuur van eenhede met die hand voor of na die vassit van die sole	43,85	48,24	44,79	49,26
(xi) Die poleer van eenhede met skuurpapier en/of was na die aanwending van vernis, verf of spuitverf of tussen die aanwending daarvan	38,19	42,01	39,00	42,90
(xii) Keuring vir gehalte	52,81	58,10	53,94	59,33
(xiii) Die herstel van eenhede	38,19	42,01	39,00	42,90
(xiv) Die stempel van nommers				
(xv) Die vernis, verf, spuitverf of indoop van eenhede	38,19	42,01	39,00	42,90
(xvi) Die vassit van dekoratiewe sooiknoppies en/of spykers en/of klinknaels en/of hegspykers aan eenhede na iceswerk				

Fort Hare Excellence

	During the period ending 31.12.1980		Thereafter	
	Column A	Column B	Column A	Column B
	Per week	*Per week*	*Per week*	*Per week*
	R	R	R	R
(L) STRING-LASTING OF LINED OR UNLINED FOOTWEAR BY HAND PULLING, OR WITH THE ASSISTANCE OF ANY OTHER DEVICE				
Qualified employees on:				
(i) String-lasting of fabric uppers	43,85	48,24	44,79	49,26
(ii) String-lasting of synthetic uppers				
[*Ratio —For every two qualified employees employed in this section not more than one learner may be employed.*]				
(M) WOODEN UNIT MANUFACTURING				
Operations not provided for in any other section of clause 1 of Annexure A to Part II:				
(a) Manufacture of covered or uncovered wooden heels (including the processing of laminated layered covers):				
Qualified employees on:				
(i) Machine setting to ensure the automatic or semi-automatic operation of any machine contained in this section	46,43	51,07	47,42	52,16
(ii) Cutting of blanks prior to laminating in the preparation of layered heel covers				
(iii) Scouring, cementing, positioning and pressing of blanks prior to cutting or guillotining of layered heel covers	38,19	42,01	39,00	42,90
(iv) Cutting or guillotining of laminated blanks to produce heel covering material	46,43	51,07	47,42	52,16
(v) Cutting of heel covers to a pattern from layered heel covering material				
(vi) *(aa)* Cross cutting of timber into lengths				
(ab) Shaping of heels and heelbreasts, using templates and/or jigs and/or guides				
(ac) Cutting or scouring for pitching of heels, using templates and/or jigs and/or guides	38,19	42,01	39,00	42,90
(ad) Cupping of heels to fit heel seats				
(vii) Cementing heels and heel covers				
(viii) Spotting of heel covers to heels and pressing				
(ix) Trimming of heel covers				
(x) Top piece attaching	43,85	48,24	44,79	49,26
(b) Manufacture of wooden units inclusive and/or exclusive of heels:				
Qualified employees on:				
(i) Selecting and/or planing of raw timber	38,19	42,01	39,00	42,90
(ii) Measuring, marking and cutting timber into required lengths				
(iii) Marking top and side elevation for profile cutting of unit				
(iv) Cutting and shaping from wood of a combined unit forming a footshaped base and cutting of fancy cut-outs on the base	43,85	48,24	44,79	49,26
(v) Cutting or routing of a margin partly or right round a wood unit to countersink lasting margin				
(vi) Cementing or solutioning and laminating of two or more pieces of wood to increase final substance	38,19	42,01	39,00	42,90
(vii) Positioning and pressing of pre-trimmed or untrimmed soles to wooden units	43,85	48,24	44,79	49,26
(viii) Solutioning or cementing and attaching heel pieces to soles prior to attaching to wooden units provided such pieces do not exceed the substance of the soles	38,19	42,01	39,00	42,90
(ix) Attaching top pieces to heels	43,85	48,24	44,79	49,26
(x) *(aa)* Scouring units by automatic machine prior to or after sole attaching	38,19	42,01	39,00	42,90
(ab) Scouring units by hand prior to or after sole attaching	43,85	48,24	44,79	49,26
(xi) Polishing of units using sandpaper and/or wax after varnishing, painting or spraying or between applications of these operations	38,19	42,01	39,00	42,90
(xii) Examining or quality	52,81	58,10	53,94	59,33
(xiii) Repairing of units				
(xiv) Size stamping	38,19	42,01	39,00	42,90
(xv) Varnishing, painting, spraying or dipping units				
(xvi) Attaching of decorative studs and/or nails and/or rivets and/or tacks to units after lasting	38,19	42,01	39,00	42,90

IN LUMINE TUO VIDEBIMUS LUMEN
University of Fort Hare
Together in Excellence

	Gedurende die tydperk eindigende 31.12.1980		Daarna	
	Kolom A	Kolom B	Kolom A	Kolom B
	Per week	*Per week*	*Per week*	*Per week*
	R	R	R	R
(N) LEERLINGE				
(i) Leerlinge wat die werksaamhede verrig wat in klousule 4 van Deel II vermeld word:				
Eerste ses maande	19,30	21,22	19,71	21,68
Tweede ses maande	23,20	25,53	23,70	26,07
Derde ses maande	30,06	33,07	30,70	33,77
Vierde ses maande	33,40	36,73	34,11	37,52
Vyfde ses maande	37,10	40,81	37,89	41,68
Sesde ses maande	41,01	45,11	41,88	46,07
Sewende ses maande	44,10	48,51	45,04	49,54
Agtste ses maande	49,49	54,44	50,55	55,60
Daarna, die voorgeskrewe loon.				
(ii) Leerlinge in klas III in die Sool-en-bukafdeling en die Maak- en Afwerkafdelings volgens ondervinding:				
Eerste ses maande	16,71	18,38	17,07	18,77
Tweede ses maande	19,30	21,22	19,71	21,68
Derde ses maande	22,08	24,29	22,55	24,81
Vierde ses maande	25,05	27,56	25,59	28,14
Vyfde ses maande	28,21	31,04	28,82	31,70
Sesde ses maande	31,53	34,68	32,20	35,42
Daarna, die voorgeskrewe loon.				
(iii) Leerlinge in diens vir die werksaamhede in subklousule H vermeld:				
Eerste drie maande	16,71	18,38	17,07	18,77
Tweede drie maande	18,56	[illegible],41	18,95	20,85
Derde drie maande	20,42	[illegible],46	20,85	22,94
Vierde drie maande	22,26	[illegible],49	22,74	25,01
Vyfde drie maande	24,12	[illegible],54	24,64	27,10
Daarna, die voorgeskrewe loon.				
(iv) Ander leerlinge, volgens ondervinding:				
Eerste ses maande	16,71	18,38	17,07	18,77
Tweede ses maande	19,30	21,22	19,71	21,68
Derde ses maande	22,08	24,29	22,55	24,81
Vierde ses maande	25,05	27,56	25,59	28,14
Vyfde ses maande	28,21	31,04	28,82	31,70
Sesde ses maande	31,53	34,68	32,20	35,42
Sewende ses maande	35,24	38,77	35,99	39,59
Agtste ses maande	39,89	43,88	40,74	44,81".
Daarna, die voorgeskrewe loon.				

(2) In voorbehoudsbepaling (ii) *(aa)* van subklousule (N), vervang die bedrag „R36,31" deur die bedrag „R37,10".

(3) In voorbehoudsbepaling (ii) *(ab)* van subklousule (N), vervang die bedrag „R40,08" deur die bedrag „R40,95".

(4) In voorbehoudsbepaling (iii) van subklousule (N), vervang die bedrag „R37,38" deur die bedrag „R36,19".

(5) Vervang subklousule (O) deur die volgende:

	Gedurende die tydperk eindigende 31.12.1980		Daarna	
	Kolom A	Kolom B	Kolom A	Kolom B
	Per week	*Per week*	*Per week*	*Per week*
	R	R	R	R
„(O) ALGEMENE ARBEIDERS				
Algemene arbeiders	27,84	30,62	28,43	31,28".

University of Fort Hare
Together in Excellence

	During the period ending 31.12.1980		Thereafter	
	Column A	Column B	Column A	Column B
	Per week	*Per week*	*Per week*	*Per week*
	R	R	R	R
(N) LEARNERS				
(i) Learners on the operations referred to in clause 4 of Part II:				
First six months	19,30	21,22	19,71	21,68
Second six months	23,20	25,53	23,70	26,07
Third six months	30,06	33,07	30,70	33,77
Fourth six months	33,40	36,73	34,11	37,52
Fifth six months	37,10	40,81	37,89	41,68
Sixth six months	41,01	45,11	41,88	46,07
Seventh six months	44,80	48,51	45,04	49,54
Eighth six months	49,49	54,44	50,55	55,60
Thereafter, the prescribed rate.				
(ii) Learners in Class III in the Rough Stuff, Making and Finishing Departments, according to experience:				
First six months	16,71	18,38	17,07	18,77
Second six months	19,30	21,22	19,71	21,68
Third six months	22,08	24,29	22,55	24,81
Fourth six months	25,05	27,56	25,59	28,14
Fifth six months	28,21	31,04	28,82	31,70
Sixth six months	31,53	34,68	32,20	35,42
Thereafter, the prescribed rate.				
(iii) Learners employed on the operations referred to in subclause H:				
First three months	16,71	18,38	17,07	18,77
Second three months	18,56	20,41	18,95	20,85
Third three months	20,42	22,46	20,85	22,94
Fourth three months	22,26	24,49	22,74	25,01
Fifth three months	24,12	26,54	24,64	27,10
Thereafter, the prescribed rate.				
(iv) Other learners, according to experience:				
First six months	16,71	18,38	17,07	18,77
Second six months	19,30	21,22	19,71	21,68
Third six months	22,08	24,29	22,55	24,81
Fourth six months	25,05	27,56	25,59	28,14
Fifth six months	28,21	31,04	28,82	31,70
Sixth six months	31,53	34,68	32,20	35,42
Seventh six months	35,24	38,77	35,99	39,59
Eighth six months	39,89	43,88	40,74	44,81".
Thereafter, the prescribed rate.				

(2) In proviso (ii) *(aa)* to subclause (N), substitute the amount "R37,10" for the amount "R36,31".

(3) In proviso (ii) *(ab)* to subclause (N), substitute the amount "R40,95" for the amount "R40,08".

(4) In proviso (iii) to subclause (N), substitute the amount "R38,19" for the amount "R37,38".

(5) Substitute the following for subclause (O):

	During the period ending 31.12.1980		Thereafter	
	Column A	Column B	Column A	Column B
	Per week	*Per week*	*Per week*	*Per week*
	R	R	R	R
"(O) GENERAL LABOURERS				
General labourers	27,84	30,62	28,43	31,28".

University of Fort Hare
Together in Excellence

7. KLOUSULE 2.—SKOEISEL SOOS HIERONDER GESPESIFISEER

Vervang subklousules (1) en (2) van klousule 2 van Aanhangsel A van Deel II deur die volgende:

„(1) LONE

	Gedurend die tydperk eindigende 31.12.1980		Daarna	
	Kolom A	Kolom B	Kolom A	Kolom B
	Per week	*Per week*	*Per week*	*Per week*
	R	R	R	R
A.—TOERYGSTEWELS VAN RUBBER				
Gekwalifiseerde werknemers in diens vir:				
(i) Die merk en/of sny van tekstielstowwe	55,94	61,54	57,14	62,85
(ii) Die sny van rubberboleer	29,70	32,67	30,33	33,36
(iii) Die sny van kleedstof met rubber geïmpregneer				
(iv) Die Stikafdeling:				
(a) Stik van boleer	34,07	37,47	34,79	38,27
(b) Stik van voering				
(c) Die maak van vetergate				
(d) Tonge poleer				
(e) Tonge insit				
(f) Tonge vassit	29,70	32,67	30,33	33,36
(g) Tafelwerkers				
(v) Alle soolsnywerksaamhede, hetsy met die hand of 'n pers	46,12	50,73	47,10	51,81
(vi) Alle ander perssnywerksaamhede (slegs onderwerk)	33,50	36,85	34,22	37,64
(vii) Handleeswerk (d.w.s. die oortrek van die bereide boleer oor die lees en die vassit daarvan aan die binnesool	36,53	40,18	37,30	41,03
(viii) Binnesole vassit				
(ix) Materiaal rondom die lees plaas	29,70	32,67	30,33	33,36
(x) Sole vassit				
(xi) 'n Outoklaaf bedien	32,74	36,02	33,44	36,78
(xii) Rubberlymwerk met die hand				
(xiii) Rubberlymwerk met 'n masjien	29,70	32,67	30,33	33,36
(xiv) *(a)* Die giet van sole, hakke en/of sool- en hakeenhede				
(b) Die giet van stewels, uitgesonderd in 'n outoklaaf	34,07	37,47	34,79	38,27
(xv) Die inslaan van dikkopspykers	41,93	46,12	42,82	47,10
(xvi) Die rofmaak van sole				
(xvii) Die rofmaak van boleer				
(xviii) Die gladsny van rande				
(xix) Eksudaatverwydering en/of naatpoetsing van stewels wat gegiet is				
(xx) Die insit van veters				
(xxi) Die uittrek en sortering van leeste				
(xxii) Die regsny van voerings				
(xxiii) Boleer rol	29,70	32,67	30,33	33,36
(xxiv) Steunstukke sny en/of insit				
(xxv) Poets				
(xxvi) Skoonmaak				
(xxvii) Nommers op voerings stempel				
(xxviii) Trollie vir outoklaaf laai				
(xxix) Pare uitsoek				
(xxx) Deurlopende binnesole of bedekkings vir binnesole vassit				
(xxxi) Alle werksaamhede nie hierbo in (i) tot (xxx) gespesifiseer nie				
(xxxii) Algemene arbeiders	27,84	30,62	28,43	31,28
B.—ANDER SKOEISEL IN HIERDIE SEKSIE				
Gekwalifiseerde werknemers in diens:				
(i) In die Boleersnyafdeling:				
Groep 1:				
Merk en/of sny (uit seildoek of kleedstof)	55,94	61,54	57,14	62,85
Groep 2:				
Snyer bystaan				
Merk en/of sny (uit rubber en/of seildoek met rubber geïmpregneer) van rubberstewels				
Nommers merk	30,95	34,04	31,61	34,77
(ii) In die Stikafdeling:				
Groep 3:				
Steunstukke vassit				
Nommers op voerings stempel				
Drade afknip				
Alle ander stikkamerwerksaamhede, met inbegrip van die maak van vetergate, perforeer- en skaafwerk	33,73	37,10	34,44	37,89
(iii) In die Onderwerkafdeling:				
Groep 4:				
Die sny van sole uit rubber met 'n pers of met die hand	46,12	50,73	47,10	51,81

University of Fort Hare
Together in Excellence

7. CLAUSE 2.—FOOTWEAR AS SPECIFIED BELOW

Substitute the following for subclauses (1) and (2) of clause 2 Annexure A to Part II:

"(1) WAGES

	During the period ending 31.12.1980		Thereafter	
	Column A	Column B	Column A	Column B
	Per week	*Per week*	*Per week*	*Per week*
	R	R	R	R
A.—LACE-UP RUBBER BOOTS				
Qualified employees on:				
(i) Marking and/or cutting of textile fabrics	55,94	61,54	57,14	62,85
(ii) Cutting of rubber uppers	29,70	32,67	30,33	33,36
(iii) Cutting of fabric impregnated with rubber				
(iv) Closing Department:				
(a) Upper closing	34,07	37,47	34,79	38,27
(b) Lining closing				
(c) Eyeletting				
(d) Buffing tongues				
(e) Inserting tongues				
(f) Securing tongues	29,70	32,67	30,33	33,36
(g) Table-hands				
(v) All sole cutting operations whether by hand or press	46,12	50,73	47,10	51,81
(vi) All other press cutting operations (bottom stock only)	33,50	36,85	34,22	37,64
(vii) Hand-lasting (means the pulling over of the prepared upper over the last and securing it to the insole)	36,53	40,18	37,30	41,03
(viii) Insole attaching				
(ix) Placing material around the last	29,70	32,67	30,33	33,36
(x) Sole attaching				
(xi) Attending an autoclave	32,74	36,02	33,44	36,78
(xii) Solutioning by hand				
(xiii) Solutioning by machine	29,70	32,67	30,33	33,36
(xiv) *(a)* Moulding of soles, heels and/or sole and heel units				
(b) Moulding of boots other than in an autoclave	34,07	37,47	34,79	38,27
(xv) Hobnailing	41,93	46,12	42,82	47,10
(xvi) Sole roughing				
(xvii) Upper roughing				
(xviii) Edge trimming				
(xix) Spew and/or flash trimming on moulded boots				
(xx) Inserting laces				
(xxi) Slipping and sorting lasts				
(xxii) Trimming linings				
(xxiii) Rolling uppers	29,70	32,67	30,33	33,36
(xxiv) Cutting and/or inserting stays				
(xxv) Dressing				
(xxvi) Cleaning				
(xxvii) Stamping sizes on linings				
(xxviii) Loading trolley for autoclave				
(xxix) Pairing				
(xxx) Attaching throughs or insole covers				
(xxxi) Any operations not specified in (i) to (xxx) above				
(xxxii) General labourers	27,84	30,62	28,43	31,28
B.—OTHER FOOTWEAR WITHIN THIS SECTION				
Qualified employees on:				
(i) Upper Cutting Department:				
Group 1:				
Marking and/or cutting (from canvas or fabric)	55,94	61,54	57,14	62,85
Group 2:				
Assisting clicker				
Marking and/or cutting (from rubber and/or canvas impregnated with rubber) gum boots				
Size marking	30,95	34,04	31,61	34,77
(ii) Closing Department:				
Group 3:				
Attaching stays				
Size stamping on linings				
Thread trimming				
All other Closing Room operations, including eyeletting, perforating and skiving	33,73	37,10	34,44	37,89
(iii) Bottom Stock Department:				
Group 4:				
Sole cutting from rubber by press or by hand	46,12	50,73	47,10	51,81

University of Fort Hare
Together in Excellence

	Gedurende die tydperk eindigende 31.12.1980		Daarna	
	Kolom A	Kolom B	Kolom A	Kolom B
	Per week	*Per week*	*Per week*	*Per week*
	R	R	R	R
(B) ANDER SKOEISEL IN HIERDIE SEKSIE *(vervolg)*				
Groep 5:				
Die sny of uitpers van ru-stukke vir die giet van sole en/of hakke	33,50	36,85	34,22	37,64
Groep 6.				
Alle ander persnywerksaamhede	32,52	35,77	33,21	36,53
(iv) In die Maakafdeling:				
Groep 7:				
Vulmateriaal vir binnesole aanbring				
Nommers op binnesole stempel				
Handleeswerk, die vassit van rubbersole met die hand	30,95	34,04	31,61	34,77
Sole aan boleer vulkaniseer				
Rubberlym met die hand of 'n masjien aanbring				
Montering	32,52	35,77	33,21	36,53
Regstreekse giet van sole aan selfboleer	35,96	39,55	36,72	40,40
Inspuitgiet van eenhede aan boleer wat op 'n lees vasgewerk is of wat met 'n tou aan 'n lees vasgewerk is of van sooleenhede:				
(a) Waar een werknemer met 'n inspuitgietmasjien werksaam is	43,85	48,24	44,79	49,26
(b) Waar twee werknemers met 'n inspuitgietmasjien werksaam is, moet elkeen soos volg betaal word	43,85	48,24	44,79	49,26
(c) Waar meer as twee werknemers met 'n inspuitgietmasjien werksaam is, moet elkeen soos volg betaal word	38,19	42,01	39,00	42,90
Op lees met tou vaswerk	35,96	39,55	36,72	40,40
Leeswerk op 'n Kamborian-masjien	45,15	49,66	46,11	50,72
Leeswerk van beddings en kante met enige soort masjien	50,22	55,24	51,29	56,42
Gekombineerde oortrek- en puntleeswerk	62,97	69,27	64,31	70,74
(v) *Groep 8:*				
Dikkopspykers met die hand of masjien inslaan	41,93	46,12	42,82	47,10
(vi) *Groep 9:*				
Agterstrook vassit				
Sierstrokies vassit				
Binnesool vassit				
Voering van binnesool vassit				
Sementering				
Sole skoonmaak				
Sierstrokies sny				
Vervoerband voer				
Granulering	30,95	34,04	31,61	34,77
Neusverstywers insit				
Boleer rol				
Leeste uittrek				
Sole rol				
Leeste vasmaak				
Boleer regsny				
Die massameet van pastille vir regstreekse giet				
Latbeddingdraaiwerk				
Nagaan en herstel				
Rande skuur	32,52	35,77	33,21	36,53
Syskermdrukwerk				
(vii) Werksaamhede nie in (i) tot (vi) hierbo gespesifiseer nie	30,95	34,04	31,61	34,77
(viii) Algemene arbeidspt	29,67	32,63	30,30	33,33
(2) Leerlinge in Diens in Verband met Werksaamhede in Subklousule (1) A en (1) B bedoel (uitgesonderd Algemene Arbeiders)				
(i) Vroulike werknemers in die Stikafdeling en vroulike werknemers wat skoene in dose pak en verpak; en alle leerlinge in die Boleersny- en Onderwerkafdelings:				
Volgens ondervinding:				
Eerste drie maande	16,71	18,38	17,07	18,77
Tweede drie maande	18,56	20,41	18,95	20,85
Derde drie maande	20,42	22,46	20,85	22,94
Vierde drie maande	22,26	24,49	22,74	25,01
Vyfde drie maande	24,12	26,54	24,64	27,10
Daarna, die voorgeskrewe loon.				
(ii) Ander leerlinge:				
Volgens ondervinding:				
Eerste ses maande	16,71	18,38	17,07	18,77
Tweede ses maande	18,56	20,41	18,95	20,85
Derde ses maande	20,42	22,46	20,85	22,94
Vierde ses maande	22,26	24,49	22,74	25,01
Vyfde ses maande	24,12	26,54	24,64	27,10
Daarna, die voorgeskrewe loon.				

University of Fort Hare
Together in Excellence

	During the period ending 31.12.1980		Thereafter	
	Column A	Column B	Column A	Column B
	Per week	*Per week*	*Per week*	*Per week*
	R	R	R	R
(B) OTHER FOOTWEAR WITHIN THIS SECTION *(continued)*				
Group 5:				
Cutting or extruding blanks for the moulding of soles and/or heels	33,50	36,85	34,22	37,64
Group 6:				
All other press cutting operations	32,52	35,77	33,21	36,53
(iv) Making Department:				
Group 7:				
Applying insole filler				
Size stamping insole				
Hand-lasting, rubbersole attaching by hand	30,95	34,04	31,61	34,77
Vulcanising soles to uppers				
Solutioning by hand or machine				
Assembling	32,52	35,77	33,21	36,53
Direct moulding of soles to canvas uppers	35,96	39,55	36,72	40,40
Injection moulding of units to lasted uppers or string-lasted uppers or of sole units:				
(a) Where one employee is employed on an injection moulding machine	43,85	48,24	44,79	49,26
(b) Where two employees are employed on an injection moulding machine, each shall be paid	43,85	48,24	44,79	49,26
(c) Every employee in excess of two, employed on an injection moulding machine, shall be paid	38,19	42,01	39,00	42,90
String-lasting	35,96	39,55	36,72	40,40
Lasting operations on a Kamborian machine	45,15	49,66	46,11	50,72
Lasting seats and sides by any machine	50,22	55,24	51,29	56,42
Combined pulling over and forepart lasting	62,97	69,27	64,31	70,74
(v) *Group 8:*				
Hobnailing by hand or machine	41,93	46,12	42,82	47,10
(vi) *Group 9:*				
Attaching back strip				
Attaching foxing				
Attaching insole				
Attaching lining to upper				
Cementing				
Cleaning soles				
Cutting foxing				
Feeding conveyer				
Granulating	30,95	34,04	31,61	34,77
Inserting toe puffs				
Rolling uppers				
Slipping lasts				
Sole rolling				
Supplying lasts				
Trimming uppers				
Mass-measuring pellets for direct moulding				
Wheeling				
Checking and repairing				
Edge scouring	32,52	35,77	33,21	36,53
Silk screen printing				
(vii) Any operations not specified in (i) to (vi) above	30,95	34,04	31,61	34,77
(viii) General labourers	29,67	32,63	30,30	33,33
(2) Learners Employed on Operations referred to in Subclauses (1) A and (1) B (Excluding General Labourers)				
(i) Female employees in the Closing Department and on boxing and packing; and all learners in the Upper Cutting and Bottom Stock Departments:				
According to experience:				
First three months	16,71	18,38	17,07	18,77
Second three months	18,56	20,41	18,95	20,85
Third three months	20,42	22,46	20,85	22,94
Fourth three months	22,26	24,49	22,74	25,01
Fifth three months	24,12	26,54	24,64	27,10
Thereafter, the prescribed rate.				
(ii) Other learners:				
According to experience:				
First six months	16,71	18,38	17,07	18,77
Second six months	18,56	20,41	18,95	20,85
Third six months	20,42	22,46	20,85	22,94
Fourth six months	22,26	24,49	22,74	25,01
Fifth six months	24,12	26,54	24,64	27,10
Thereafter, the prescribed rate.				

University of Fort Hare
Together in Excellence

8. KLOUSULE 3.—PANTOFFELS WAARVAN DIE BOLEER VAN ANDER STOWWE AS LEER GEMAAK IS

Vervang subklousules (1), (2) en (3) van klousule 3 van Aanhangsel A van Deel II deur die volgende:

„(1) LONE

	Gedurende die tydperk eindigende 31 12.1980		Daarna	
	Kolom A	Kolom B	Kolom A	Kolom B
	Per week	*Per week*	*Per week*	*Per week*
	R	R	R	R
Gekwalifiseerde werknemers in diens vir:				
(A) Boleersnyafdeling:				
Sny van boleer	45,47	50,01	46,43	51,08
Sny van binnesole en/of sny van voerings	35,29	38,81	36,04	39,64
Inmekaarsit en/of merk en/of stempel van boleer	32,47	35,71	33,16	36,47
(B) Masjienstikafdeling:				
(i) Neuse, krae, nate, omboorsel, tonge, binnesole en stopsels vasstik, knoopsgate maak en knope aanwerk	33,40	36,73	34,11	37,52
(ii) Boleer, binnesole, stopsels en sagte sole met 'n masjien aanmekaarsit	36,74	40,41	37,52	41,27
(iii) Gomlastiekgebonde rande van boleer aan sagte sole met masjien vasstik	39,52	43,47	40,36	44,39
(C) Sool-en-hakafdeling:				
(i) Die sny van sole (alle tipes)	47,85	52,63	48,87	53,75
(ii) Die sny van binnesole, haklagies en bostukke	33,40	36,73	34,11	37,52
(iii) Stempelwerk				
(iv) Hakke bedek	32,47	35,71	33,16	36,47
(D) Maakafdeling:				
(i) Omkeermaaiwerk aan pantoffels	47,85	52,63	48,87	53,75
(ii) Fatsoenering met stoom en uitklophamer:				
(a) Viltwerk	36,74	40,41	37,52	41,27
(b) Leerwerk, Kubaanse hakke van kleedstof	39,29	43,22	40,12	44,14
(iii) Vasplakproses:				
(a) Handleeswerk				
Die rofmaak van sole				
Sool in posisie plaas op boleer en tegelykertyd 'n pers bedien	38,07	41,88	38,88	42,77
Sool in posisie plaas op boleer by voorkanthakbedding voordat perswerk verrig word				
'n Pers bedien, waar die sole vooraf in posisie geplaas is				
(b) Rubberlymwerk	33,40	36,73	34,11	37,52
(c) Vasspyker van sole en binnesole				
(iv) Vulkanisering van sole op geloeste boleer	38,07	41,88	38,88	42,77
(v) Spykerwerk				
(vi) Groefsnywerk				
Gelykmaak met die hand	33,40	36,73	34,11	37,52
Vassit van hakke				
Vasspyker van agterstukke				
(vii) Omkeer van pantoffels	29,70	32,67	30,33	33,36
(viii) Leeste gaan haal en bêre	32,47	35,71	33,16	36,47
(ix) Hakkussinkies insit	33,40	36,73	34,11	37,52
(x) Vervoerbande bedien	32,47	35,71	33,16	36,47
(xi) Regstreekse inspuitgiet of stort van stowwe wat vir versoolwerk en vir die ombou van eenhede gebruik word:				
Regstreekse inspuitgiet van eenhede aan boleer wat op 'n lees vasgewerk is of wat met 'n tou aan 'n lees vasgewerk is of boleer met vasgestikte binnesole:				
(a) Waar een werknemer met 'n inspuitgietmasjien werksaam is	43,85	48,24	44,79	49,26
(b) Waar twee werknemers met 'n inspuitgietmasjien werksaam is, moet elkeen soos volg betaal word	43,85	48,24	44,79	49,26
(c) Waar meer as twee werknemers met 'n inspuitgietmasjien werksaam is, moet elkeen soos volg betaal word	38,19	42,01	39,00	42,90
(E) Afwerkafdeling				
Gladsny van rande	46,65	51,32	47,64	52,41
Afwerk van rande	35,52	39,07	36,28	39,90
Afwerk van hakke	34,30	37,73	35,03	38,54
Skuurwerksaamhede				
Inkwerk, beitswerk en borselwerk	33,40	36,73	34,11	37,52
Boleer van lees afhaal	32,47	35,71	33,16	36,47
(F) Skoenkamerafdeling:				
Keuring	36,74	40,41	37,52	41,27
Alle ander skoenkamerwerksaamhede	32,47	35,71	33,16	36,47
(2) LEERLINGE				
Volgens ondervinding:				
Eerste ses maande	16,71	18,38	17,07	18,77
Tweede ses maande	19,30	21,22	19,71	21,68
Derde ses maande	22,08	24,29	22,55	24,81
Vierde ses maande	25,05	27,56	25,59	28,14

University of Fort Hare Together in Excellence

8. CLAUSE 3.—SLIPPERS, THE UPPERS OF WHICH ARE MADE OF MATERIALS OTHER THAN LEATHER

Substitute the following for subclauses (1), (2) and (3) of clause 3 of Annexure A to Part II:

"(1) WAGES

	During the period ending 31.12.1980		Thereafter	
	Column A	Column B	Column A	Column B
	Per week	*Per week*	*Per week*	*Per week*
	R	R	R	R
Qualified employees on:				
(A) Upper Cutting Department:				
Upper cutting	45,47	50,01	46,43	51,08
Stock cutting and/or lining cutting	35,29	38,81	36,04	39,64
Upper assembling and/or marking and/or stamping	32,47	35,71	33,16	36,47
(B) Machining Department:				
(i) Toe caps, collars, seams, binding, buttonholing, buttoning, tongues, socks, pads	33,40	36,73	34,11	37,52
(ii) Machining of uppers, socks, pads and soft soles together	36,74	40,41	37,52	41,27
(iii) Machining elastic bound edges of uppers to soft soles	39,52	43,47	40,36	44,39
(C) Rough Stuff Department:				
(i) Sole cutting (all types)	47,85	52,63	48,87	53,75
(ii) Insole cutting and lift and top-piece cutting	33,40	36,73	34,11	37,52
(iii) Stamping				
(iv) Heel covering	32,47	35,71	33,16	36,47
(D) Making Department:				
(i) Slipper turning	47,85	52,63	48,87	53,75
(ii) Steaming and blocking into shape:				
(a) Felt work	36,74	40,41	37,52	41,27
(b) Leather work, fabric Cubans	39,29	43,22	40,12	44,14
(iii) Stuck-on process:				
(a) Hand-lasting				
Sole roughening				
Sole positioning on upper and press operating in one operation	38,07	41,88	38,88	42,77
Sole positioning on upper at fore-part seat before pressing				
Press operating with sole previously positioned				
(b) Solutioning operations	33,40	36,73	34,11	37,52
(c) Sole and insole tacking				
(iv) Vulcanising soles to lasted uppers	38,07	41,88	38,88	42,77
(v) Slugging				
(vi) Channelling				
Hand-levelling	33,40	36,73	34,11	37,52
Heel attaching				
Tacking backs				
(vii) Slipper turning	29,70	32,67	30,33	33,36
(viii) Fetching and putting away lasts	32,47	35,71	33,16	36,47
(ix) Inserting heel pads	33,40	36,73	34,11	37,52
(x) Conveyor operating	32,47	35,71	33,16	36,47
(xi) Direct injection moulding or pouring of any materials used for soling and unit converting:				
Direct injection moulding of units to lasted uppers or string-lasted uppers or uppers with stitched-in socks:				
(a) Where one employee is employed on an injection moulding machine	43,85	48,24	44,79	49,26
(b) Where two employees are employed on an injection moulding machine, each shall be paid	43,85	48,24	44,79	49,26
(c) Every employee in excess of two, employed on an injection moulding machine, shall be paid	38,19	42,01	39,00	42,90
(E) Finishing Department:				
Edge trimming	46,65	51,32	47,64	52,41
Edge setting	35,52	39,07	36,28	39,90
Heel trimming	34,30	37,73	35,03	38,54
Scouring operations				
Inking, staining and brushing	33,40	36,73	34,11	37,52
Slipping uppers	32,47	35,71	33,16	36,47
(F) Shoe Room Department:				
Examining	36,74	40,41	37,52	41,27
All other shoe room operations	32,47	35,71	33,16	36,47
(2) LEARNERS				
According to experience:				
First six months	16,71	18,38	17,07	18,77
Second six months	19,30	21,22	19,71	21,68
Third six months	22,08	24,29	22,55	24,81
Fourth six months	25,05	27,56	25,59	28,14

University of Fort Hare
Together in Excellence

	Gedurende die tydperk eindigende 31.12.1980		Daarna	
	Kolom A	Kolom B	Kolom A	Kolom B
	Per week	*Per week*	*Per week*	*Per week*
	R	R	R	R
KLOUSULE 3 *(vervolg)*				
Vyfde ses maande	28,21	31,04	28,82	31,70
Sesde ses maande	31,53	34,68	32,20	35,42
Sewende ses maande	35,24	38,77	35,99	39,59
Agste ses maande	39,89	43,88	40,74	44,81
Met dien verstande dat 'n leerling nie geregtig is op 'n hoër loon as dié wat voorgeskryf is vir 'n gekwalifiseerde werknemer wat die werksaamheid verrig waarvoor sodanige leerling in diens is nie.				
(3) ALGEMENE ARBEIDERS				
Algemene arbeiders	27,84	30,62	28,43	31,28".

9. KLOUSULE 4.—„PLATMATE" EN „DOPPERS"

(1) Vervang subklousules (1), (2) en (3) van klousule 4 van Aanhangsel A van Deel II deur die volgende:

„(1) LONE

	Gedurende die tydperk eindigende 31.12.1980		Daarna	
	Kolom A	Kolom B	Kolom A	Kolom B
	Per week	*Per week*	*Per week*	*Per week*
	R	R	R	R
Gekwalifiseerde werknemers in diens vir:				
(i) Uitsnywerk	44,18	48,60	45,12	49,64
(ii) Kragmasjienwerk	25,29	27,82	25,83	28,41
Masjienwerk, uitgesonderd kragmasjienwerk	22,18	24,40	22,65	24,92
Ander werksaamhede in die Stikafdeling	25,29	27,82	25,83	28,41
(iii) Soolsnywerk met kragmasjien	52,28	57,51	53,39	58,73
Soolsnywerk, uitgesonderd met 'n kragmasjien	} 31,50	34,65	32,18	35,39
(iv) Oortrek met die hand en/of handleeswerk				
Stikwerk met die hand	22,18	24,40	22,65	24,92
(v) Randafwerking met kragmasjien	44,18	48,60	45,12	49,64
Randafwerking, uitgesonderd met 'n kragmasjien	31,50	34,65	32,18	35,39
(vi) Pare uitsoek en/of nommers merk	22,18	24,40	22,65	24,92
(vii) Alle werksaamhede, uitgesonderd dié gespesifiseer in (i) tot (vi) hiervan	31,50	34,65	32,18	35,39
(2) LEERLINGE				
Volgens ondervinding				
Eerste ses maande	16,71	18,38	17,07	18,77
Tweede ses maande	18,56	20,41	18,95	20,85
Derde ses maande	20,42	22,46	20,85	22,94
Vierde ses maande	22,26	24,49	22,74	25,01
Vyfde ses maande	24,12	26,54	24,64	27,10
Met dien verstande dat 'n leerling nie geregtig is op 'n hoër loon as die wat voorgeskryf is vir 'n gekwalifiseerde werknemer wat dieselfde werksaamheid verrig waarvoor sodanige leerling in diens is nie.				
(3) ALGEMENE ARBEIDERS				
Algemene arbeiders	27,84	30,62	28,43	31,28".

(2) In subklousule (4), vervang die bedrag „R21,70" waar dit ook al voorkom deur die bedrag „R22,18".

Hierdie Ooreenkoms is namens die partye op hede die 18de dag van Junie 1980 onderteken.

A. G. EVERINGHAM ..... (Lid van die Raad)

F. J. J. JORDAAN ..... (Lid van die Raad)

J. P. HORN ..... (Sekretaris van die Raad)

IN LUMINE TUO VIDEBIMUS LUMEN
University of Fort Hare
Together in Excellence

	During the period ending 31.12 1980		Thereafter	
	Column A	Column B	Column A	Column B
	Per week	*Per week*	*Per week*	*Per week*
	R	R	R	R
CLAUSE 3 *(continued)*				
Fifth six months	28,21	31,04	28,82	31,70
Sixth six months	31,53	34,68	32,20	35,42
Seventh six months	35,24	38,77	35,99	39,59
Eighth six months	39,89	43,88	40,74	44,81
Provided that a learner shall not be entitled to a wage higher than that prescribed for a qualified employee on the operation on which such learner is engaged				
(3) General Labourers				
General labourers	27,84	30,62	28,43	31,28".

9. Clause 4.— 'Platnate" and "Doppers'

(1) Substitute the following for subclauses (1), (2) and (3) of clause 4 of Annexure A to Part II:

"(1) Wages

	During the period ending 31.12.1980		Thereafter	
	Column A	Column B	Column A	Column B
	Per week	*Per week*	*Per week*	*Per week*
	R	R	R	R
Qualified employees on:				
(i) Clicking	44,18	48,60	45,12	49,64
(ii) Machining by power	25,29	27,82	25,83	28,41
Machining other than by power	22,18	24,40	22,65	24,92
Other Closing Department operations	25,29	27,82	25,83	28,41
(iii) Sole cutting by power	52,28	57,51	53,39	58,73
Sole cutting other than by power	} 31,50	34,65	32,18	35,39
(iv) Pulling over by hand and/or hand-lasting				
Stitching by hand	22,18	24,40	22,65	24,92
(v) Edge trimming by power	44,18	48,60	45,12	49,64
Edge trimming other than by power	31,50	34,65	32,18	35,39
(vi) Pairing and/or size marking	22,18	24,40	22,65	24,92
(viii) Any operation other than those specified in (i) to (vi) hereof	31,50	34,65	32,18	35,39
(2) Learners				
According to experience:				
First six months	16,71	18,38	17,07	18,77
Second six months	18,56	20,41	18,95	20,85
Third six months	20,42	22,46	20,85	22,94
Fourth six months	22,26	24,49	22,74	25,01
Fifth six months	24,12	26,54	24,64	27,10
Provided that a learner shall not be entitled to a wage higher than that prescribed for a qualified employee on the operation on which such learner is engaged.				
(3) General Labourers				
General labourers	27,84	30,62	28,43	31,28".

(2) In subclause (4), substitute the amount "R22,18" for the amount "R21,70" wherever it appears.

This Agreement signed on behalf of the parties this 18th day of June 1980.

A. G. EVERINGHAM ..... (Member of the Council)

F. J. J. JORDAAN ..... (Member of the Council)

J. P. HORN ..... (Secretary of the Council)

University of Fort Hare
Together in Excellence

No. R.1756] [29 Augustus 1980

WET OP NYWERHEIDSVERSOENING, 1956

LEERNYWERHEID, REPUBLIEK VAN SUID-AFRIKA

WYSIGING VAN OOREENKOMS VIR DIE SEKSIE ALGEMENE GOEDERE

Ek STEPHANUS PETRUS BOTHA, Minister van Mannekragbenutting, verklaar hierby—

(a) kragtens artikel 48 (1) *(a)* van die Wet op Nywerheidsversoening, 1956, dat die bepalings van die Ooreenkoms (hierna die Wysigingsooreenkoms genoem) wat in die Bylae hiervan verskyn en op die Seksie Algemene Goedere van die Leernywerheid betrekking het, met ingang van die tweede Maandag na die datum van publikasie van hierdie kennisgewing en vir die tydperk wat op 30 Junie 1981 eindig, bindend is vir die werkgewersorganisasies en die vakverenigings wat die Wysigingsooreenkoms aangegaan het en vir die werkgewers en werknemers wat lede van genoemde organisasies of verenigings is;

(b) kragtens artikel 48 (1) *(b)* van genoemde Wet, dat die bepalings van die Wysigingsooreenkoms met ingang van die tweede Maandag na die datum van publikasie van hierdie kennisgewing en vir die tydperk wat op 30 Junie 1981 eindig, bindend is vir alle ander werkgewers en werknemers as dié genoem in paragraaf *(a)* van hierdie kennisgewing, wat betrokke is by of in diens is in genoemde Nywerheid in die Republiek van Suid-Afrika, uitgesonderd die hawe en nedersetting van Walvisbaai; en

(c) kragtens artikel 48 (3) *(a)* van genoemde Wet, dat die bepalings van die Wysigingsooreenkoms met ingang van die tweede Maandag na die datum van publikasie van hierdie kennisgewing en vir die tydperk wat op 30 Junie 1981 eindig, in die Republiek van Suid-Afrika, uitgesonderd die hawe en nedersetting van Walvisbaai, *mutatis mutandis* bindend is vir alle persone wat nie werknemers is nie en wat in diens is in genoemde Nywerheid by dié werkgewers vir wie enigeen van genoemde bepalings ten opsigte van werknemers bindend is en vir daardie werkgewers ten opsigte van sodanige persone in hul diens.

S. P. BOTHA
Minister van Mannekragbenutting

BYLAE

NASIONALE NYWERHEIDSRAAD VIR DIE LEERNYWERHEID VAN SUID-AFRIKA

SEKSIE ALGEMENE GOEDERE

OOREENKOMS

ingevolge die Wet op Nywerheidsversoening, 1956, gesluit deur en aangegaan tussen die

(a) Midland and Border Leather Industry Manufacturers' Association,

(b) Cape Western and North-Western Leather Industries Employers' Association,

No. R.1756] [29 August 1980

INDUSTRIAL CONCILIATION ACT, 1956

LEATHER INDUSTRY, REPUBLIC OF SOUTH AFRICA

AMENDMENT OF AGREEMENT FOR THE GENERAL GOODS SECTION

I, STEPHANUS PETRUS BOTHA, Minister of Manpower Utilisation, hereby—

(a) in terms of section 48 (1) *(a)* of the Industrial Conciliation Act, 1956, declare that the provisions of the Agreement (hereinafter referred to as the Amending Agreement) which appears in the Schedule hereto and which relates to the General Goods Section of the Leather Industry, shall be binding, with effect from the second Monday after the date of publication of this notice and for the period ending 30 June 1981 upon the employers' organisations and the trade unions which entered into the Amending Agreement and upon the employers and employees who are members of the said organisations or unions;

(b) in terms of section 48 (1) *(b)* of the said Act, declare that the provisions of the Amending Agreement shall be binding, with effect from the second Monday after the date of publication of this notice and for the period ending 30 June 1981, upon all employers and employees other than those referred to in paragraph *(a)* of this notice, who are engaged or employed in the said Industry in the Republic of South Africa, excluding the port and settlement of Walvis Bay; and

(c) in terms of section 48 (3) *(a)* of the said Act, declare that in the Republic of South Africa, excluding the port and settlement of Walvis Bay, and with effect from the second Monday after the date of publication of this notice and for the period ending 30 June 1981, the provisions of the Amending Agreement shall *mutatis mutandis* be binding upon all persons who are not employees and who are employed in the said Industry by the employers upon whom any of the said provisions are binding in respect of employees and upon those employers in respect of such persons in their employ.

S. P. BOTHA
Minister of Manpower Utilisation

SCHEDULE

NATIONAL INDUSTRIAL COUNCIL OF THE LEATHER INDUSTRY OF SOUTH AFRICA

GENERAL GOODS SECTION

AGREEMENT

in accordance with the provisions of the Industrial Conciliation Act, 1956, made and entered into by and between the

(a) Midland and Border Leather Industry Manufacturers' Association,

(b) Cape Western and North-Western Leather Industries Employers' Association;

(c) Transvaal Footwear, Tanning and Leather Trades Association
(d) Natal Footwear, Tanning and General Leather Manufacturers' Association,

en

(e) Southern Cape Leather Industries Association
(hierna die „werkgewers" of die „werkgewersorganisasies" genoem), aan die een kant, en die
(f) National Union of Leather Workers;
(g) Transvaal Leather and Allied Trades Industrial Union;

en

(h) Trunk and Box Workers' Industrial Union (Transvaal)
(hierna die „werknemers" of „vakvereniging" genoem), aan die ander kant,
wat die partye is by die Nasionale Nywerheidsraad vir die Leernywerheid van Suid-Afrika,
om die Ooreenkoms, gepubliseer by Goewermentskennisgewing R 459 van 14 Maart 1980, soos gewysig by Goewermentskennisgewing R 1463 van 18 Julie 1980, soos volg te wysig:

1. KLOUSULE 4 —LONE EN LOONSKALE

(1) In subklousule (7) *(a)*, vervang die uitdrukking „1 Oktober 1979" waar dit ook al voorkom deur die uitdrukking „15 Mei 1980".
(2) Skrap subklousule (7) *(b)*.

2. KLOUSULE 8 —VAKANSIEDAE EN JAARLIKSE VERLOF

(1) In subklousule (7) *(a)*, vervang die uitdrukking „Paasmaandag" deur die uitdrukking „Gesinsdag".
(2) In subklousule (7) *(b)*, vervang die uitdrukking „Paasmaandag" deur die uitdrukking „Gesinsdag".

3. AANHANGSEL C

(1) Skrap die opskrif „Gedurende die tydperk eindigende 31.12.1980" en die loonkolomme wat daaronder verskyn.
(2) Skrap die uitdrukking „Daarna" waar dit in die opskrif van die derde en vierde kolomme voorkom.
Hierdie Ooreenkoms namens die partye op hede die 18de dag van Junie 1980 onderteken.

M. PORTER ..... (Lid van die Raad)

F. J. J. JORDAAN ..... (Lid van die Raad)

J. P. HORN ..... (Sekretaris van die Raad)

(c) Transvaal Footwear, Tanning and Leather Trades Association.
(d) Natal Footwear, Tanning and General Leather Manufacturers' Association;

and

(e) Southern Cape Leather Industries Association
(hereinafter referred to as the "employers" or the "employers' organisations"), of the one part, and the
(f) National Union of Leather Workers;
(g) Transvaal Leather and Allied Trades Industrial Union;

and

(h) Trunk and Box Workers' Industrial Union (Transvaal)
(hereinafter referred to as the "employees" or the "trade unions"), of the other part,
being parties to the National Industrial Council of the Leather Industry of South Africa,
to amend the Agreement published under Government Notice R 459 dated 14 March 1980, as amended by Government Notice R 1463 dated 18 July 1980, as follows:

1. CLAUSE 4 —WAGES AND RATES

(1) In subclause (7) *(a)*, substitute the expression "15 May 1980" for the expression "1 October 1979" wherever it appears.
(2) Delete subclause (7) *(b)*.

2. CLAUSE 8 —HOLIDAYS AND ANNUAL LEAVE

(1) In subclause (7) *(a)*, substitute the expression "Family Day" for the expression "Easter Monday".
(2) In subclause (7) *(b)*, substitute the expression "Family Day" for the expression "Easter Monday".

3. ANNEXURE C

(1) Delete the heading "During the period ending 31 December 1980" and the wage columns appearing thereunder.
(2) Delete the expression "Thereafter" where it appears in the heading to the third and fourth columns.
This Agreement signed on behalf of the parties this 18th day of June 1980.

M. PORTER ..... (Member of the Council)

F. J. J. JORDAAN ..... (Member of the Council)

J. P. HORN ..... (Secretary of the Council)

IN LUMINE TUO VIDEBIMUS LUMEN
University of Fort Hare
Together in Excellence

No. R.1757] [29 Augustus 1980

WET OP NYWERHEIDSVERSOENING, 1956

LEERNYWERHEID, REPUBLIEK VAN SUID-AFRIKA

WYSIGING VAN OOREENKOMS VIR DIE HANDSAKSEKSIE

Ek, STEPHANUS PETRUS BOTHA, Minister van Mannekragbenutting, verklaar hierby—

(a) kragtens artikel 48 (1) *(a)* van die Wet op Nywerheidsversoening, 1956, dat die bepalings van die Ooreenkoms (hierna die Wysigingsooreenkoms genoem) wat in die Bylae hiervan verskyn en op die Handsakseksie van die Leernywerheid betrekking het, met ingang van die tweede Maandag na die datum van publikasie van hierdie kennisgewing en vir die tydperk wat op 30 Junie 1981 eindig, bindend is vir die werkgewersorganisasies en die vakverenigings wat die Wysigingsooreenkoms aangegaan het en vir die werkgewers en werknemers wat lede van genoemde organisasies of verenigings is;

(b) kragtens artikel 48 (1) *(b)* van genoemde Wet, dat die bepalings van die Wysigingsooreenkoms met ingang van die tweede Maandag na die datum van publikasie van hierdie kennisgewing en vir die tydperk wat op 30 Junie 1981 eindig, bindend is vir alle ander werkgewers en werknemers as dié genoem in paragraaf *(a)* van hierdie kennisgewing, wat betrokke is by of in diens is in genoemde Nywerheid in die Republiek van Suid-Afrika, uitgesonderd die hawe en nedersetting van Walvisbaai; en

(c) kragtens artikel 48 (3) *(a)* van genoemde Wet, dat die bepalings van die Wysigingsooreenkoms met ingang van die tweede Maandag na die datum van publikasie van hierdie kennisgewing en vir die tydperk wat op 30 Junie 1981 eindig, in die Republiek van Suid-Afrika, uitgesonderd die hawe en nedersetting van Walvisbaai, *mutatis mutandis* bindend is vir alle persone wat nie werknemers is nie en wat in diens is in genoemde Nywerheid by dié werkgewers vir wie enigeen van genoemde bepalings ten opsigte van werknemers bindend is en vir daardie werkgewers ten opsigte van sodanige persone in hul diens.

S. P. BOTHA
Minister van Mannekragbenutting

BYLAE

NASIONALE NYWERHEIDSRAAD VIR DIE LEERNYWERHEID VAN SUID-AFRIKA

HANDSAKSEKSIE

OOREENKOMS

ingevolge die Wet op Nywerheidsversoening, 1956, gesluit deur en aangegaan tussen die

(a) Midland and Border Leather Industry Manufacturers' Association;

(b) Cape Western and North-Western Leather Industries Employers' Association;

No. R. 1757] [29 August 1980

INDUSTRIAL CONCILIATION ACT, 1956

LEATHER INDUSTRY, REPUBLIC OF SOUTH AFRICA

AMENDMENT OF AGREEMENT FOR THE HANDBAG SECTION

I, STEPHANUS PETRUS BOTHA, Minister of Manpower Utilisation, hereby—

(a) in terms of section 48 (1) *(a)* of the Industrial Conciliation Act, 1956, declare that the provisions of the Agreement (hereinafter referred to as the Amending Agreement) which appears in the Schedule hereto and which relates to the Handbag Section of the Leather Industry, shall be binding, with effect from the second Monday after the date of publication of this notice and for the period ending 30 June 1981, upon the employers' organisations and the trade unions which entered into the Amending Agreement and upon the employers and employees who are members of the said organisations or unions;

(b) in terms of section 48 (1) *(b)* of the said Act, declare that the provisions of the Amending Agreement shall be binding, with effect from the second Monday after the date of publication of this notice and for the period ending 30 June 1981, upon all employers and employees other than those referred to in paragraph *(a)* of this notice who are engaged or employed in the said Industry in the Republic of South Africa, excluding the port and settlement of Walvis Bay; and

(c) in terms of section 48 (3) *(a)* of the said Act, declare that in the Republic of South Africa, excluding the port and settlement of Walvis Bay, and with effect from the second Monday after the date of publication of this notice and for the period ending 30 June 1981, the provisions of the Amending Agreement shall *mutatis mutandis* be binding upon all persons who are not employees and who are employed in the said Industry by the employers upon whom any of the said provisions are binding in respect of employees and upon those employers in respect of such persons in their employ.

S. P. BOTHA
Minister of Manpower Utilisation

SCHEDULE

NATIONAL INDUSTRIAL COUNCIL OF THE LEATHER INDUSTRY OF SOUTH AFRICA

HANDBAG SECTION

AGREEMENT

in accordance with the provisions of the Industrial Conciliation Act, 1956, made and entered into by and between the

(a) Midland and Border Leather Industry Manufacturers' Association;

(b) Cape Western and North-Western Leather Industries Employers' Association;

(c) Transvaal Footwear, Tanning and the Leather Trades Association;
(d) Natal Footwear, Tanning and General Leather Manufacturers' Association;
(e) Southern Cape Leather Industries Association;
en
(f) South African Handbag Manufacturers' Association
(hierna die „werkgewers" of die „werkgewersorganisasies" genoem), aan die een kant, en die
(g) National Union of Leather Workers
en
(h) Transvaal Leather and Allied Trades Industrial Union
(hierna die „werknemers" of die „vakverenigings" genoem), aan die ander kant,
wat die partye is by die Nasionale Nywerheidsraad vir die Leernywerheid van Suid-Afrika,
om die Ooreenkoms gepubliseer by Goewermentskennisgewing R.460 van 14 Maart 1980, soos gewysig by Goewermentskennisgewing R.1464 van 18 Julie 1980, soos volg te wysig:

1. KLOUSULE 4.—LONE EN LOONSKALE

(1) In subklousule (7) *(a)*, vervang die uitdrukking „1 Oktober 1979" waar dit ook al voorkom deur die uitdrukking „15 Mei 1980".
(2) Skrap subklousule (7) *(b)*.

2. KLOUSULE 8.—VAKANSIEDAE EN JAARLIKSE VERLOF

(2) In subklousule (7) *(a)*, vervang die uitdrukking „Paasmaandag" deur die uitdrukking „Gesinsdag".
(2) In subklousule (7) *(b)*, vervang die uitdrukking „Paasmaandag" deur die uitdrukking „Gesinsdag".

3. AANHANGSEL C

(1) Skrap die opskrif „Gedurende die tydperk eindigende 31.12.1980" en die loonkolomme wat daaronder verskyn.
(2) Skrap die uitdrukking „Daarna" waar dit in die opskrif van die derde en vierde kolomme voorkom.
Hierdie Ooreenkoms namens die partye op hede die 18de dag van Junie 1980 onderteken

M. PORTER.....(Lid van die Raad)

F. J. J. JORDAAN.....(Lid van die Raad)

J. P. HORN.....(Sekretaris van die Raad)

(c) Transvaal Footwear, Tanning and Leather Trades Association;
(d) Natal Footwear, Tanning and General Leather Manufacturers' Association;
(e) Southern Cape Leather Industries Association;
and
(f) South African Handbag Manufacturers' Association
(hereinafter referred to as the "employers" or the "employers organisations"), of the one part, and the
(g) National Union of Leather Workers;
and
(h) Transvaal Leather and Allied Trades Industrial Union
(hereinafter referred to as the "employees" or the "trade unions"), of the other part,
being parties to the National Industrial Council of the Leather Industry of South Africa,
to amend the Agreement published under Government Notice R.460 dated 14 March 1980, as amended by Government Notice R.1464 dated 18 July 1980, as follows:

1. CLAUSE 4.—WAGES AND RATES

(1) In subclause (7) *(a)* substitute the expression "15 May 1980" for the expression "1 October 1979" wherever it appears.
(2) Delete subclause (7) *(b)*

2. CLAUSE 8.—HOLIDAYS AND ANNUAL LEAVE

(1) In subclause (7) *(a)*, substitute the expression "Family Day" for the expression "Easter Monday".
(2) In subclause (7) *(b)*, substitute the expression "Family Day" for the expression "Easter Monday".

3. ANNEXURE C

(1) Delete the heading "During the period ending 31 December 1980" and the wage columns appearing thereunder.
(2) Delete the expression "Thereafter" where it appears in the heading to the third and fourth columns.
This Agreement signed on behalf of the parties this 18th day of June 1980.

M. PORTER.....(Member of the Council)

F. J. J. JORDAAN.....(Member of the Council)

J. P. HORN.....(Secretary of the Council)

University of Fort Hare
Together in Excellence

No. R.1758] [29 Augustus 1980.

WET OP NYWERHEIDSVERSOENING 1956

LEERNYWERHEID, REPUBLIEK VAN SUID-AFRIKA

SKOEISELAFDELING—WYSIGING VAN TEGNOLOGIESE FONDSOOREENKOMS

Ek, STEPHANUS PETRUS BOTHA, Minister van Mannekragbenutting, verklaar hierby—

(a) kragtens artikel 48 (1) *(a)* van die Wet op Nywerheidsversoening, 1956, dat die bepalings van die Ooreenkoms (hierna die Wysigingsooreenkoms genoem) wat in die Bylae hiervan verskyn en op die Skoeiselafdeling van die Leernywerheid betrekking het, met ingang van die tweede Maandag na die datum van publikasie van hierdie kennisgewing en vir die tydperk wat op 5 Maart 1983 eindig, bindend is vir die werkgewersorganisasies en die vakverenigings wat die Wysigingsooreenkoms aangegaan het en vir die werkgewers en werknemers wat lede van genoemde organisasies of verenigings is;

(b) kragtens artikel 48 (1) *(b)* van genoemde Wet, dat die bepalings van die Wysigingsooreenkoms met ingang van die tweede Maandag na die datum van publikasie van hierdie kennisgewing en vir die tydperk wat op 5 Maart 1983 eindig, bindend is vir alle ander werkgewers en werknemers as dié genoem in paragraaf *(a)* van hierdie kennisgewing, wat betrokke is by of in diens is in genoemde Nywerheid in die Republiek van Suid-Afrika, uitgesonderd die hawe en nedersetting van Walvisbaai; en

(c) kragtens artikel 48 (3) *(a)* van genoemde Wet, dat die bepalings van die Wysigingsooreenkoms met ingang van die tweede Maandag na die datum van publikasie van hierdie kennisgewing en vir die tydperk wat op 5 Maart 1983 eindig, in die Republiek van Suid-Afrika, uitgesonderd die hawe en nedersetting van Walvisbaai, *mutatis mutandis* bindend is vir alle persone wat nie werknemers is nie en wat in diens is in genoemde Nywerheid by dié werkgewers vir wie enigeen van genoemde bepalings ten opsigte van werknemers bindend is en vir daardie werkgewers ten opsigte van sodanige persone in hul diens.

S. P. BOTHA
Minister van Mannekragbenutting

BYLAE

NASIONALE NYWERHEIDSRAAD VIR DIE LEERNYWERHEID VAN SUID-AFRIKA

SKOEISELAFDELING

TEGNOLOGIESE FONDSOOREENKOMS

ingevolge die Wet op Nywerheidsversoening, 1956, gesluit deur en aangegaan tussen die

(a) Midland and Border Leather Industry Manufacturers' Association,

(b) Cape Western and North-Western Leather Industries Employers' Association;

No. R.1758] [29 August 1980

INDUSTRIAL CONCILIATION ACT, 1956

LEATHER INDUSTRY, REPUBLIC OF SOUTH AFRICA

FOOTWEAR SECTION—AMENDMENT OF TECHNOLOGICAL FUND AGREEMENT

I, STEPHANUS PETRUS BOTHA, Minister of Manpower Utilisation, hereby—

(a) in terms of section 48 (1) *(a)* of the Industrial Conciliation Act, 1956, declare that the provisions of the Agreement (hereinafter referred to as the Amending Agreement) which appears in the Schedule hereto and which relates to the Footwear Section of the Leather Industry, shall be binding, with effect from the second Monday after the date of publication of this notice and for the period ending 5 March 1983, upon the employers' organisations and the trade unions which entered into the Amending Agreement and upon the employers and employees who are members of the said organisations or unions;

(b) in terms of section 48 (1) *(b)* of the said Act, declare that the provisions of the Amending Agreement shall be binding, with effect from the second Monday after the date of publication of this notice and for the period ending 5 March 1983, upon all employers and employees other than those referred to in paragraph *(a)* of this notice, who are engaged or employed in the said Industry in the Republic of South Africa, excluding the port and settlement of Walvis Bay; and

(c) in terms of section 48 (3) *(a)* of the said Act, declare that in the Republic of South Africa, excluding the port and settlement of Walvis Bay, and with effect from the second Monday after the date of Publication of this notice and for the period ending 5 March 1983, the provisions of the Amending Agreement shall *mutatis mutandis* be binding upon all persons who are not employees and who are employed in the said Industry by the employers upon whom any of the said provisions are binding in respect of employees and upon those employers in respect of such persons in their employ.

S. P. BOTHA
Minister of Manpower Utilisation

SCHEDULE

NATIONAL INDUSTRIAL COUNCIL OF THE LEATHER INDUSTRY OF SOUTH AFRICA

FOOTWEAR SECTION

TECHNOLOGICAL FUND AGREEMENT

in accordance with the provisions of the Industrial Conciliation Act, 1956, made and entered into by and between the

(a) Midland and Border Leather Industry Manufacturers' Association;

(b) Cape Western and North-Western Leather Industries Employers' Association;

(c) Transvaal Footwear, Tanning and Leather Trades Association;
(d) Natal Footwear, Tanning and General Leather Manufacturers' Association;

en

(e) Southern Cape Leather Industries Association

(hierna die „werkgewers" of „werkgewersorganisasies" genoem), aan die een kant, en die

(f) National Union of Leather Workers;

en

(g) Transvaal Leather and Allied Trades Industrial Union

(hierna die „werknemers" of „vakverenigings" genoem), aan die ander kant,

wat die partye is by die Nasionale Nywerheidsraad vir die Leernywerheid van Suid-Afrika,

om die Ooreenkoms gepubliseer by Goewermentskennisgewing R.239 van 25 Februarie 1972, soos gewysig en verleng by Goewermentskennisgewings R.1661 van 14 September 1973, R.321 van 14 Februarie 1975, R.2214 van 21 November 1975, R.1260 van 8 Julie 1977, R.1175 van 9 Junie 1978 en R.404 van 29 Februarie 1980, soos volg te wysig:

KLOUSULE 4.—TEGNOLOGIESE FONDS VAN DIE SKOEISELAFDELING

In subklousule 3, vervang die syfer „24" deur die syfer „30".

Hierdie Ooreenkoms namens die partye op hede die 18de dag van Junie 1980 onderteken.

A. G. EVERINGHAM ..... (Lid van die Raad)

F. J. J. JORDAAN ..... (Lid van die Raad)

J. P. HORN ..... (Sekretaris van die Raad)

(c) Transvaal Footwear, Tanning and Leather Trades Association;
(d) Natal Footwear, Tanning and General Leather Manufacturers' Association;

and

(e) Southern Cape Leather Industries Association

(hereinafter referred to as the "employers" or the "employers' organisations"), of the one part, and the

(f) National Union of Leather Workers;

and

(g) Transvaal Leather and Allied Trades Industrial Union

(hereinafter referred to as the "employees" or the "trade unions"), of the other part,

being parties to the National Industrial Council of the Leather Industry of South Africa,

to amend the Agreement published under Government Notice R.239 dated 25 February 1972, as amended and extended by Government Notices R.1661 dated 14 September 1973, R.321 dated 14 February 1975, R.2214 dated 21 November 1975, R.1260 dated 8 July 1977, R.1175 dated 9 June 1978 and R.404 dated 29 February 1980, as follows:

CLAUSE 4.—FOOTWEAR INDUSTRY TECHNOLOGICAL FUND

In subclause (3), substitute the figure "30" for the figure "24".

This Agreement signed on behalf of the parties this 18th day of June 1980.

A. G. EVERINGHAM ..... (Member of the Council)

F. J. J. JORDAAN ..... (Member of the Council)

J. P. HORN ..... (Secretary of the Council)

University of Fort Hare
Together in Excellence

INHOUD

Departement van Mannekragbenutting

GOEWERMENTSKENNISGEWINGS

No.		Bladsy
R.1755	Wet op Nywerheidsversoening, 1956: Leernywerheid, Republiek van Suid-Afrika: Wysiging van Ooreenkoms vir die Skoeiselseksie	1
R.1756	Wet op Nywerheidsversoening, 1956: Leernywerheid, Republiek van Suid-Afrika: Wysiging van Ooreenkoms vir die Seksie Algemene Goedere	34
R.1757	Wet op Nywerheidsversoening, 1956: Leernywerheid, Republiek van Suid-Afrika: Wysiging van Ooreenkoms vir die Handsakseksie	36
R.1758	Wet op Nywerheidsversoening, 1956: Leernywerheid, Republiek van Suid-Afrika: Skoeiselafdeling—Wysiging van Tegnologiese Fondsooreenkoms	38

CONTENTS

Department of Manpower Utilization

GOVERNMENT NOTICES

No.		Page
R.1755	Industrial Conciliation Act, 1956: Leather Industry, Republic of South Africa: Amendment of Agreement for the Footwear Section	1
R.1756	Industrial Conciliation Act, 1956: Leather Industry, Republic of South Africa: Amendment of Agreement for the General Goods Section	34
R.1757	Industrial Conciliation Act, 1956: Leather Industry, Republic of South Africa: Amendment of Agreement for the Handbag Section	36
R.1758	Industrial Conciliation Act, 1956: Leather Industry, Republic of South Africa: Footwear Section—Amendment of Technological Fund Agreement	38

GEDRUK VIR DIE STAATSDRUKKER, PRETORIA, DEUR KAAP & TRANSVAAL DRUKKERS (EDMS) BPK, KAAPSTAD—B82714/13 100
PRINTED FOR THE GOVERNMENT PRINTER, PRETORIA, BY CAPE & TRANSVAAL PRINTERS (PTY) LTD, CAPE TOWN—B82714/13 100

7198

University of Fort Hare
Together in Excellence

STAATSKOERANT
VAN DIE REPUBLIEK VAN SUID-AFRIKA

REPUBLIC OF SOUTH AFRICA
GOVERNMENT GAZETTE

REGULASIEKOERANT No. 3060 — *As 'n Nuusblad by die Poskantoor Geregistreer*

PRYS + 1c AVB 26c PRICE + 1c GST
BUITELANDS 30c ABROAD
POSVRY · POST FREE

REGULATION GAZETTE No. 3060 — *Registered at the Post Office as a Newspaper*

KAAPSTAD, 29 AUGUSTUS 1980
CAPE TOWN, 29 AUGUST 1980

VOL. 182] [No. 7198

University of Fort Hare
Together in Excellence

PROKLAMASIE

VAN DIE STAATSPRESIDENT VAN DIE REPUBLIEK VAN SUID-AFRIKA

No. R.146, 1980]

INWERKINGTREDING VAN ARTIKELS 5 (1), 6 (1) EN 7 (1) VAN DIE MAATSKAPPYWYSIGINGSWET, 1980

Kragtens die bevoegdheid my verleen by artikels 5 (2), 6 (2) en 7 (2) van die Maatskappywysigingswet, 1980 (Wet 84 van 1980), bepaal ek hierby dat artikels 5 (1), 6 (1) en 7 (1) van daardie Wet op 1 September 1980 in werking tree.

GEGEE onder my Hand en die Seël van die Republiek van Suid-Afrika te Pretoria op hede die dertiende dag van Augustus Eenduisend Negehonderd en Tagtig.

M. VILJOEN,
Staatspresident

Op las van die Staatspresident-in-Rade,
S. W. VAN DER MERWE

PROCLAMATION

BY THE STATE PRESIDENT OF THE REPUBLIC OF SOUTH AFRICA

No. R.146, 1980]

COMMENCEMENT OF SECTIONS 5 (1), 6 (1) AND 7 (1) OF THE COMPANIES AMENDMENT ACT, 1980

Under and by virtue of the powers vested in me by sections 5 (2), 6 (2) and 7 (2) of the Companies Amendment Act, 1980 (Act 84 of 1980), I hereby determine that sections 5 (1), 6 (1) and 7 (1) of that Act shall come into operation on 1 September 1980.

GIVEN under my Hand and the Seal of the Republic of South Africa at Pretoria this thirteenth day of August One thousand Nine hundred and Eighty.

M. VILJOEN,
State President

By Order of the State President-in-Council,
S. W. VAN DER MERWE

GOEWERMENTSKENNISGEWING

DEPARTEMENT VAN HANDEL EN VERBRUIKERSAKE

No. R.1759] [29 Augustus 1980

MAATSKAPPYWET, 1973

Wysiging van die Administratiewe Regulasies vir Maatskappye, 1973

Die Minister van Nywerheidswese en van Handel en Verbruikersake het, kragtens artikel 15 van die Maatskappywet, 1973 (Wet 61 van 1973), die volgende regulasies uitgevaardig:

1. Die Administratiewe Regulasies vir Maatskappye, 1973, afgekondig by Goewermentskennisgewing R.1948 van 19 Oktober 1973, word hierby gewysig—

(a) deur die volgende voorbehoudsbepaling by paragraaf *(b)* van regulasie 4 (1) by te voeg:
„Met dien verstande dat die bepalings van hierdie paragraaf nie geld nie ten opsigte van 'n afskrif bedoel in artikel 14 van die Wet wat as 'n ware afskrif van die oorspronklike dokument gesertifiseer is deur die Griffier van die Hof.";

(b) deur paragraaf *(c)* van daardie regulasie deur die volgende paragraaf te vervang:
„*(c)* As die notaris in 'n ander vreemde land is as die Verenigde Koninkryk van Groot-Brittanje en Noord Ierland, Zimbabwe, Lesotho, Botswana, Swaziland, Suidwes-Afrika of 'n staat waarvan die gebied deel van die Republiek uitgemaak het en wat ingevolge 'n Wet van die Parlement 'n onafhanklike staat geword het, moet sy handtekening bekragtig word.";

(c) deur subregulasie (2) van regulasie 7 deur die volgende subregulasie te vervang:
„(2) Behoudens die bepalings van artikels 63 (2), 75 (3), 174, 175 (1) en 179 (6) en die voorbehoudsbepaling by artikel 178 (1) van die Wet, is die gelde wat kragtens die Wet en hierdie regulasies betaal moet word, dié wat in Bylae 1 van hierdie regulasies uiteengesit word.";

(d) deur die volgende subregulasie by regulasie 8 by te voeg:
„(3) Die datum van die betaling van gelde, bykomende gelde, jaargeld of ander bedrae bedoel in artikel 10 (1) van die Wet, word geag te wees die datum, na gelang van die geval—
(a) op die kwitansie wat ten opsigte van 'n betaling bedoel in subregulasie (1) uitgereik is; of
(b) waarop inkomsteseëls bedoel in paragraaf *(a)* van genoemde artikel, ooreenkomstig die bepalings van daardie paragraaf gerojeer is; of
(c) afgedruk deur middel van 'n datumstempel van die Registrateur, op 'n dokument waarop 'n seël bedoel in paragraaf *(b)* van genoemde artikel gestempel is of ten opsigte waarvan 'n betaling op 'n wyse beoog in paragraaf *(c)* van genoemde artikel gemaak is.";

(e) deur regulasie 23A deur die volgende regulasie te vervang:

GOVERNMENT NOTICE

DEPARTMENT OF COMMERCE AND CONSUMER AFFAIRS

No. R.1759] [29 August 1980

COMPANIES ACT, 1973

Amendment of the Companies Administrative Regulations, 1973

The Minister of Industries and of Commerce and Consumer Affairs has under and by virtue of section 15 of the Companies Act, 1973, (Act 61 of 1973), made the following regulations:

1. The Companies Administrative Regulations, 1973, published by Government Notice R.1948 of 19 October 1973 is hereby amended—

(a) by the addition of the following proviso to paragraph *(b)* of regulation 4 (1):
"Provided that the provisions of this paragraph shall not apply in respect of a copy referred to in section 14 of the Act which is certified as a true copy of the original document by the Registrar of the Court.";

(b) by the substitution for paragraph *(c)* of that regulation of the following paragraph:
"*(c)* If the notary public is in a foreign country, other than the United Kingdom of Great Britain and Northern Ireland, Zimbabwe, Lesotho, Swaziland, South West Africa or any state the territory of which formed part of the Republic and which became an independent state in terms of an Act of Parliament, his signature shall be authenticated.";

(c) by the substitution for subregulation (2) of regulation 7 of the following subregulation:
"(2) Subject to the provisions of sections 63 (2), 75 (3), 174, 175 (1) and 179 (6) and of the proviso to section 178 (1) of the Act, the fees to be paid under the Act and these regulations shall be those specified in Schedule 1 to these regulations.";

(d) by the addition of the following subregulation to regulation 8:
"(3) The date of the payment of fees, additional fees, annual duty or other moneys referred to in section 10 (1) of the Act, shall be the date, as the case may be—
(a) on a receipt issued in respect of a payment contemplated in subregulation (1); or
(b) upon which revenue stamps referred to in paragraph *(a)* of that section, is cancelled in accordance with the provisions of that paragraph; or
(c) impressed by means of a date stamp of the Registrar, on a document upon which has been impressed a stamp referred to in paragraph *(b)* of that section or in respect of which a payment was made in a manner contemplated in paragraph *(c)* of that section.";

(e) by the substitution for regulation 23A of the following regulation:

„23A. 'n Aansoek om die registrasie van 'n naam as 'n defensiewe naam moet op Vorm CM8 ingedien word tesame met Vorm CM5 wat die naam bevat soos deur die Registrateur goedgekeur, en 'n aansoek om die hernuwing van die registrasie van 'n naam as 'n defensiewe naam moet op Vorm CM8A ingedien word, nie later nie as die datum waarop die lopende tydperk van die registrasie van daardie naam verstryk.";

(f) deur Bylae 1 van genoemde regulasies deur Bylae 1 hiervan te vervang;

(g) deur Vorm CM5 vervat in Bylae 2 van genoemde regulasies deur Vorm CM5 vervat in Bylae 2 hiervan te vervang;

(h) deur Vorm CM8A vervat in Bylae 2 hiervan na Vorm CM8 vervat in Bylae 2 van genoemde regulasies in te voeg;

(i) deur Vorm CM19 vervat in Bylae 2 van genoemde regulasies deur Vorm CM19 vervat in Bylae 2 hiervan te vervang; en

(j) deur Vorm CM25 vervat in Bylae 2 van genoemde regulasies deur Vorm CM25 vervat in Bylae 2 hiervan te vervang.

2. Die bewoording „Inkomsteseël of inkomstefrankeermasjienstempel R2" op Vorms CM12, CM13, CM15, CM16, CM19, CM21, CM22, CM25, CM28, CM29, CM30, CM31, CM34, CM36, CM37, CM38 en CM40 vervat in Bylae 2 van genoemde regulasies, word hierby geskrap.

3. Die bewoording „Inkomsteseël of inkomstefrankeermasjienstempel +" en die bewoording „+Geld: Indien aan spesiale besluit (CM26) aangeheg, is daar geen geld nie; indien nie aan spesiale besluit aangeheg nie, is die geld R5." op die Vorm CM20 vervat in Bylae 2 van genoemde regulasies, word hierby geskrap.

4. Ondanks die bepalings van regulasie 1 *(g)*, kan 'n aansoek om die reservering van 'n naam ingedien word gedurende 'n tydperk van ses maande na die inwerkingtreding van hierdie regulasies, op Vorm CM5 vervat in Bylae 2 van genoemde regulasies voor die wysiging daarvan deur hierdie regulasies.

5. Hierdie regulasies tree in werking op 1 September 1980.

"23A. An application for the registration of a name as a defensive name shall be lodged on Form CM8 together with Form CM5 containing the name as approved by the Registrar, and an application for the renewal of the registration of a name as a defensive name shall be lodged on Form CM8A, not later than the date upon which the current period of the registration of that name expires.";

(f) by the substitution for Schedule 1 to the said regulations of Schedule 1 hereto;

(g) by the substitution for Form CM5 contained in Schedule 2 to the said regulations of Form CM5 contained in Schedule 2 hereto;

(h) by the insertion after Form CM8 contained in Schedule 2 of the said regulations of Form CM8A contained in Schedule 2 hereto;

(i) by the substitution for Form CM19 contained in Schedule 2 to the said regulations of Form CM19 contained in Schedule 2 hereto; and

(j) by the substitution for Form CM25 contained in Schedule 2 to the said regulations of Form CM25 contained in Schedule 2 hereto.

2. The wording "Revenue stamp or revenue franking machine impression R2" on the Forms CM12, CM13, CM15, CM16, CM19, CM21, CM22, CM25, CM28, CM29, CM30, CM31, CM34, CM36, CM37, CM38 and CM40 contained in Schedule 2 to the said regulations, is hereby deleted.

3. The wording "Revenue stamp or revenue franking machine impression +" and the wording "+Fee: If attached to special resolution (CM26) there is no fee; if not attached to special resolution, fee is R5", on the Form CM20 contained in Schedule 2 to the said regulations, are hereby deleted.

4. Notwithstanding the provisions of regulation 1 *(g)*, an application for the reservation of a name may, during a period of six months after the commencement of these regulations, be lodged on Form CM5 contained in Schedule 2 to the said regulations before the amendment thereof by these regulations.

5. These regulations shall come into operation on 1 September 1980.

BYLAE 1

GELDE

Behoudens die bepalings van artikels 63 (2), 75 (3), 174, 175 (1), 179 (6) en die voorbehoudsbepaling by artikel 178 (1) van die Wet is die volgende gelde kragtens die Wet en die Regulasies betaalbaar.

Betalings moet geskied soos in regulasies 8 en 9 voorgeskryf word.

Item	Diens	Gelde betaalbaar (R)	Verbandhoudende vorm (as daar is)
1.	Insae in—		
	(a) 'n maatskappyleer in die Registrasiekantoor vir Maatskappye—		
	(i) persoonlik deur applikant ..	0,50	H191
	(ii) op die skriftelike versoek deur 'n applikant (*sluit in tot 20 foto-afdrukke van dokumente, daarna 0,20c per afdruk)	5,00*	
	(b) die sentrale register van direkteure—		
	(i) persoonlik deur applikant	0,50	H191
	(ii) op die skriftelike versoek deur 'n applikant (*sluit in tot 20 foto-afdrukke van dokumente, daarna 0,20c per afdruk)	5,00*	

SCHEDULE 1

FEES

Subject to the provisions of sections 63 (2), 75 (3), 174, 175 (1), 179 (6) and the proviso to section 178 (1) of the Act, the following fees are payable under the Act and the Regulations.

Payments shall be made as prescribed in regulations 8 and 9.

Item	Service	Fees Payable (R)	Corresponding form (if any)
1.	Inspection of—		
	(a) a company file in the Companies Registration Office—		
	(i) personally by an applicant	0,50	H191
	(ii) on the written request by an applicant (* includes up to 20 photocopies of documents, thereafter 0,20c per copy)	5,00*	
	(b) the central register of directors—		
	(i) personally by an applicant	0,50	H191
	(ii) on the written request by an applicant (* includes up to 20 photocopies of documents, thereafter 0,20c per copy)	5,00*	

Item	Diens	Gelde betaalbaar (R)	Verbandhoudende vorm (as daar is)
2.	(a) Foto-afdruk van 'n dokument, grootte ongeveer 298 mm by 210 mm of kleiner (per afdruk)	0,20	—
	(b) Foto-afdruk op papier gereproduseer van mikrofilm (per afdruk)	0,20	—
	(c) Foto-afdruk op diazo gereproduseer van mikrofilm (per afdruk)	0,50	H191
3.	Sertifisering van 'n dokument of deel van 'n dokument (per dokument)	1,00	H191
4.	Verstrekking van redes vir 'n beslissing of 'n bevel deur die Registrateur (artikel 47 (2))	20,00	—
5.	Registrasie van 'n prospektus (artikel 155)	100,00	—
6.	Belê of gelas dat 'n algemene jaarvergadering (artikel 179 (4)) of 'n algemene vergadering, gehou word (artikel 182)	10,00	—
7.	Registrasie van 'n toewysingsbrief (artikel 146A)	25,00	—
8.	Oorweging van 'n beswaar teen 'n naam (artikel 45)	50,00	—
9.	Registrasie van 'n artikel 141-verklaring	25,00	—
10.	Uitreiking van 'n getikte sertifikaat ten opsigte van die inhoud van 'n statutêre dokument of 'n deel daarvan	2,00	H191
11.	Reservering van 'n naam of 'n vertaalde vorm of 'n verkorte vorm of 'n defensiewe naam (artikel 42)	20,00	CM5
12.	Verlenging van die tydperk van die reservering van 'n naam of 'n vertaalde vorm of 'n verkorte vorm of 'n defensiewe naam (artikel 42)	5,00	CM6
13.	Registrasie van 'n vertaalde of verkorte vorm van 'n naam (artikel 43 (1) en regulasie 23)	10,00	CM7
14.	Registrasie van 'n defensiewe naam (artikel 43)	50,00	CM8
15.	Hernuwing van die registrasie van 'n defensiewe naam (artikel 43)	10,00	CM8A
16.	Registrasie van 'n verandering van 'n naam (artikel 44)	10,00	CM9
17.	Registrasie van 'n verandering van 'n vertaalde vorm of 'n verkorte vorm van 'n naam (artikel 44)	10,00	CM9A
18.	Deregistrasie van 'n vertaalde vorm of verkorte vorm van 'n naam (artikel 44)	2,00	CM9B
19.	Die byvoeging tot of die weglating van 'n verklaring by 'n naam van 'n maatskappy wat in likwidasie of onder geregtelike bestuur is (artikel 49 (7))	2,00	CM9C
20.	Sertifikaat van konsolidasie van statute (artikel 61)	15,00	CM10
21.	Registrasie van 'n spesiale besluit vir die vermindering van aandelekapitaal (artikel 87 (1))	20,00	CM14
22.	Verlenging van 'n voorgeskrewe tydperk (artikel 177)	30,00	CM17
23.	Registrasie van 'n bevel van die Hof (artikels 87, 97, 252, 311 en 313)	5,00	CM18
24.	Registrasie van 'n spesiale besluit (artikel 200)	20,00	CM26
25.	Verandering van die einde van 'n maatskappy se boekjaar (artikel 285 (2), 329 (2))	10,00	CM32
26.	Vrystelling dat groepfinansiële jaarstate nie met 'n filiaal hoef te handel nie (artikel 291 (3))	20,00	CM33
27.	Goedkeuring dat tussentydse verslae nie uitgereik word nie (artikel 307 (1) gelees met artikel 291 (3))	20,00	CM35
28.	Registrasie van 'n verandering in die Akte van 'n buitelandse maatskappy (artikel 328)	15,00	CM39

Item	Service	Fees Payable (R)	Corresponding form (if any)
2.	(a) Photocopy of a document, size approximately 298 mm by 210 mm or smaller (per copy)	0,20	—
	(b) Photocopy on paper reproduced from microfilm (per copy)	0,20	—
	(c) Photocopy on diazo reproduced from microfilm (per copy)	0,50	H191
3.	Certification of a document or part of a document (per document)	1,00	H191
4.	Furnishing of reasons for a decision or an order by the Registrar (section 47 (2))	20,00	—
5.	Registration of a prospectus (section 155)	100,00	—
6.	Call or direct that an annual general meeting (section 179 (4)) or a general meeting be held (section 182)	10,00	—
7.	Registration of a letter of allocation (section 146A)	25,00	—
8.	Considering of an objection to a name (section 45)	50,00	—
9.	Registration of a section 141-statement	25,00	—
10.	Issuing of a typed certificate in respect of the contents of a statutory document or a part thereof	2,00	H191
11.	Reservation of a name or a translated form or a shortened form or a defensive name (section 42)	20,00	CM5
12.	Extension of the period of the reservation of a name or a translated form or a shortened form or a defensive name (section 42)	5,00	CM6
13.	Registration of a translated form or a shortened form of a name (section 43 (1) and regulation 23)	10,00	CM7
14.	Registration of a defensive name (section 43)	50,00	CM8
15.	Renewal of the registration of a defensive name (section 43)	10,00	CM8A
16.	Registration of a change of a name (section 44)	10,00	CM9
17.	Registration of a change of a translated form or a shortened form of a name (section 44)	10,00	CM9A
18.	Deregistration of a translated form or a shortened form of a name (section 44)	2,00	CM9B
19.	The addition to or the omission of a statement from the name of a company which is in liquidation or under judicial management (section 49 (7))	2,00	CM9C
20.	Certificate of consolidation of articles (section 61)	15,00	CM10
21.	Registration of a special resolution for the reduction of share capital (section 87 (1))	20,00	CM14
22.	Extension of a prescribed period (section 177)	30,00	CM17
23.	Registration of an order by the court (sections 87, 97, 252, 311 and 313)	5,00	CM18
24.	Registration of a special resolution (section 200)	20,00	CM26
25.	Change of the end of a company's financial year (sections 285 (2) and 329 (2))	10,00	CM32
26.	Exemption that group annual financial statements need not deal with a subsidiary (section 291 (3))	20,00	CM33
27.	Approving that interim reports need not be issued (section 307 (1) read with section 291 (3))	20,00	CM35
28.	Registration of an alteration made in the Memorandum of an external company (section 328)	15,00	CM39

IN LUMINE TUO VIDEBIMUS LUMEN
University of Fort Hare
Together in Excellence

Item	Diens	Gelde betaalbaar (R)	Verbandhoudende vorm (as daar is)
29.	Registrasie van 'n spesiale besluit vir die omskepping van een tipe of vorm van maatskappy in 'n ander tipe of vorm van maatskappy (artikel 28 (1))	10,00	CM45
30.	Uitreiking van 'n sertifikaat om met besigheid te begin (artikel 172)	20,00	CM46
31.	Registrasie van 'n akte van 'n buitelandse maatskappy (artikel 322)	50,00	CM49
32.	Aanvra van voorlopige finansiële jaarstate van 'n privaat maatskappy (artikel 304 (2))	10,00	CM50
33.	Sertifisering van bykomende afskrifte van dokumente wat vir registrasie ingedien is (regulasie 22)	5,00	CM51
34.	Verlening van vrystelling vir die indiening van finansiële jaarstate van 'n filiaal (artikel 302 (4) *(a)*)	20,00	CM52

Item	Service	Fees Payable (R)	Corresponding form (if any)
29.	Registration of a special resolution for the conversion of one type or form of company into another type of form of company (section 28 (1))	10,00	CM45
30.	Issuing of a certificate to commence business (section 172)	20,00	CM46
31.	Registration of a Memorandum of an external company (section 322)	50,00	CM49
32.	Requesting the submission of provisional financial statements of a private company (section 304 (2))	10,00	CM50
33.	Certifying additional copies of documents lodged for registration (regulation 22)	5,00	CM51
34.	Granting of exemption from lodging annual financial statements of a subsidiary (section 302 (4) *(a)*)	20,00	CM52

IN LUMINE TUO VIDEBIMUS LUMEN
University of Fort Hare
Together in Excellence

BYLAE 2

REPUBLIEK VAN SUID-AFRIKA
MAATSKAPPYWET, 1973

VORM CM5

Geen koolpapier benodig nie

Aansoek om Reservering van Naam of Vertaalde Vorm of Verkorte Vorm of Defensiewe Naam.

(Moet in tweevoud ingedien word)

Artikel 42
Registrasiekantoor vir Maatskappye
Posbus 429, Pretoria, 0001
Telegramadres: „MAATCOM"

Inkomsteseël
of inkomstefrankeermasjien-
stempel R20

A. Voorgestelde Naam ☐ of Vertaalde Vorm ☐ of Verkorte Vorm ☐ of Defensiewe Vorm ☐
(Dus aan met 'n kruise)

In voorkeurorde	Vir Kantoorgebruik	Paraaf en datum
1.	goedgekeur/afgekeur	
2.	goedgekeur/afgekeur	
3.	goedgekeur/afgekeur	
4.	goedgekeur/afgekeur	
5.	goedgekeur/afgekeur	
6	goedgekeur/afgekeur	
	Reservering is vir twee maande geldig	

B. Vergelykende Name (Vir Kantoorgebruik)

C. Het die voorgestelde naam enige verbintenis met 'n persoon of maatskappy? Indien wel, wat is die naam en nommer (indien 'n maatskappy) en die aard van die verbintenis (bv. houer/filiaal/direkteur ens).

D. Hoofdoelstelling van die voorgestelde maatskappy

E. In die geval van 'n DEFENSIEWE NAAM, lewer skriftelike bewys dat aansoeker 'n direkte en wesenlike belang in die naam het.

Naam van Aansoeker (drukskrif)

Adres waarheen vorm gepos moet word

Handtekening van aansoeker/agent

Datum

Spesifikasies

A4 Grootte. Wit „NCR" papier. Gepons met 2 gate aan linkerkant

University of Fort Hare
Together in Excellence

SCHEDULE 2

REPUBLIC OF SOUTH AFRICA
COMPANIES ACT 1973

FORM CM 5

No carbon paper required

Application for Reservation of Name or Translated Form or Shortened Form or Defensive Name

(To be lodged in duplicate)

Section 42
Companies Registration Office
P.O. Box 429, Pretoria, 0001
Telegraphic Address "MAATCOM"

Revenue stamp or revenue franking machine impression. R20

A. Proposed Name ☐ or Translated Form ☐ or Shortened Form ☐ or Defensive Name ☐ (indicate with a cross)

In order of preference	For Office Use	Initials & Date
1.	approved/not approved	
2.	approved/not approved	
3.	approved/not approved	
4.	approved/not approved	
5.	approved/not approved	
6.	approved/not approved	
	Reservation is valid for two months	

B. Comparative Names (For Office Use)

C. Is the proposed name associated with a person or a company? If so, what is the name and number (if a company) and the nature of the association (e.g. holding/subsidiary/director etc)

D. Main object of the proposed company

E. In the case of a DEFENSIVE NAME, submit written proof that the applicant has a direct and material interest in the name.

Name of Applicant (print)

Address to which form must be returned

Signature of applicant/agent

Date

Specifications
A4 Size. White NCR paper. Punched with 2 holes Left Hand Side

University of Fort Hare
Together in Excellence

BYLAE 2 *(vervolg)*

Vorm CM8A
Form

REPUBLIEK VAN SUID-AFRIKA
Maatskappywet, 1973

REPUBLIC OF SOUTH AFRICA
Companies Act, 1973

Aansoek om Hernuwing van Registrasie van Defensiewe Naam
Application for the Renewal of Registration of Defensive Name

Artikel 43
Registrasiekantoor vir Maatskappye
Posbus 429, Pretoria, 0001
Telegramadres "MAATCOM"

Section 43
Companies Registration Office
P.O. Box 429, Pretoria, 0001
Telegraphic Address "MAATCOM"

Inkomsteseël of Inkomstefrankeermasjienstempel Revenue Stamp or Revenue Franking Machine Impression R10

A. Naam huidiglik geregistreer
Name presently registered _____

B. Datum van huidige registrasie of hernuwing
Date of present registration or renewal _____

C. Lewer skriftelike bewys dat aansoeker nog steeds 'n direkte en wesenlike belang in die naam het.
Submit written proof that applicant still has a direct and material interest in the name.

_____ Adres/Address

Naam van aansoeker (drukskrif)
Name of applicant (print) _____

University of Fort Hare
Together in Excellence

_____ _____

Handtekening van aansoeker/agent
Signature of applicant/agent _____

Datum
Date _____

Hernuwing van registrasie goedgekeur/afgekeur vir een jaar vanaf
Renewal of registration approved/not approved for one year from _____

_____ _____

Datum/Date Registrateur van Maatskappye
Registrar of Companies

(Moet deur maatskappy ingevul word/To be completed by company)

Defensiewe naam
Defensive name _____

VORM
CM8A
FORM

Die hernuwing van die registrasie van bogenoemde defensiewe naam is goedgekeur vir een jaar vanaf
The renewal of the registration of the above defensive name has been approved for one year from _____

Naam
Name _____

Posadres
Postal address _____

_____

_____

Datumstempel van Registrasiekantoor vir Maatskappye Date Stamp of Companies Registration Office

Spesifikasies/Specifications
A4 Grootte. Wit 70 g/m² Bond. Geperforeer
A4 Size. White 70 gsm Bond. Perforated.

SCHEDULE 2 *(continued)*

Form CM8A
Vorm

REPUBLIC OF SOUTH AFRICA
Companies Act, 1973

REPUBLIEK VAN SUID-AFRIKA
Maatskappywet, 1973

Application for the Renewal of Registration of Defensive Name
Aansoek om Hernuwing van Registrasie van Defensiewe Naam

Section 43
Companies Registration Office
P.O Box 429, Pretoria, 0001
Telegraphic Address "MAATCOM"

Artikel 43
Registrasiekantoor vir Maatskappye
Posbus 429, Pretoria, 0001
Telegramadres "MAATCOM"

Revenue Stamp or Revenue Franking Machine Impression
Inkomsteseël of Inkomstefrankeermasjienstempel
R10

A. Name presently registered
Naam huidiglik geregistreer _____

B. Date of present registration or renewal
Datum van huidige registrasie of hernuwing _____

C. Submit written proof that applicant still has a direct and material interest in the name.
Lewer skriftelike bewys dat aansoeker nog steeds 'n direkte en wesenlike belang in die naam het.

_____ Address/Adres

_____

Name of applicant (print)
Naam van aansoeker (drukskrif)

_____

Signature of applicant/agent
Handtekening van aansoeker/agent

Date
Datum _____

Renewal of registration approved/not approved for one year from
Hernuwing van registrasie goedgekeur/afgekeur vir een jaar vanaf _____

_____ Date/Datum

_____ Registrar of Companies
Registrateur van Maatskappye

(To be completed by company/Moet deur maatskappy ingevul word)

Defensive name
Defensiewe naam _____

FORM CM8A
VORM

The renewal of the registration of the above defensive name has been approved for one year from
Die hernuwing van die registrasie van bogenoemde defensiewe naam is goedgekeur vir een jaar vanaf _____

Name
Naam _____

Postal address
Posadres _____

_____

_____

Date Stamp of Companies Registration Office
Datumstempel van Registrasiekantoor vir Maatskappye

Specifications/Spesifikasies
A4 Size. White 70 gsm Bond. Perforated.
A4 Grootte. Wit 70 g/m² Bond. Geperforeer.

University of Fort Hare
Together in Excellence

BYLAE 2 *(vervolg)* REPUBLIEK VAN SUID-AFRIKA MAATSKAPPYWET, 1973 VORM CM19

KENNISGEWING VAN AFLOSSING VAN AFLOSBARE VOORKEURAANDELE (Artikel 98)

Naam van Maatskappy _____ Registrasienommer van Maatskappy _____

A. TOTALE AANDELEKAPITAAL VOOR AFLOSSING

GETAL AANDELE GEMAGTIG	GETAL AANDELE UITGEREIK	*BESKRYWING VAN KLASSE VAN AANDELE	UITGEREIKTE KAPITAAL	AANDELEPREMIE-REKENING
			R	R
			R	R
			R	R
			R	R
		TOTAAL	R	R

B. AANDELE AFGELOS UIT:

(i) WINSTE (ARTIKEL 98(1)) OP _____ (DATUM)

GETAL AANDELE AFGELOS	*BESKRYWING VAN KLASSE VAN AANDELE	BEDRAG PER AANDEEL	TOTALE BEDRAG VAN KAPITAAL AFGELOS
		R	R
		R	R
		R	R
		TOTAAL	R

(ii) 'n NUWE UITREIKING VAN AANDELE (ARTIKEL 98(2)) OP _____ (DATUM)

GETAL AANDELE AFGELOS	*BESKRYWING VAN KLASSE VAN AANDELE	BEDRAG PER AANDEEL	TOTALE BEDRAG VAN KAPITAAL AFGELOS
		R	R
		R	R
		R	R
		TOTAAL	R

C. AANDELE UITGEREIK IN DIE PLEK VAN AANDELE AFGELOS IN B (ii) OP _____ (DATUM)

GETAL UITGEREIK	*BESKRYWING VAN KLASSE VAN AANDELE	BEDRAG PER AANDEEL	PREMIE PER AANDEEL	AANDELE-KAPITAAL
		R	R	R
		R	R	R
		R	R	R
			TOTAAL	R

D. TOTALE AANDELEKAPITAAL NA AFLOSSING SOOS OP _____ (DATUM)

GETAL AANDELE GEMAGTIG	GETAL AANDELE UITGEREIK	*BESKRYWING VAN KLASSE VAN AANDELE	UITGEREIKTE AANDELEKAPITAAL	AANDELEPREMIE-REKENING
			R	R
			R	R
			R	R
			R	R
		TOTAAL	R (A)	R (B)
			TOTAAL (A) + (B)	R

*DUI PARI-WAARDE EN SONDER PARI-WAARDE AANDELE AFSONDERLIK AAN

DATUM _____ HANDTEKENING _____

Direkteur/Sekretaris (Skrap titel wat nie van toepassing is nie)

(Moet deur Maatskappy ingevul word)

ERKENNING VAN ONTVANGS VAN KENNISGEWING VAN AFLOSSING VAN AANDELE GEDATEER

Naam van maatskappy _____

Posadres _____

DATUMSTEMPEL VAN REGISTRASIEKANTOOR VAN MAATSKAPPYE

Spesifikasies
A4 Grootte Wit 70 g/m² Bond. Geperforeer

University of Fort Hare
Together in Excellence

SCHEDULE 2 *(continued)* REPUBLIC OF SOUTH AFRICA COMPANIES ACT, 1973 FORM CM 19

NOTICE OF REDEMPTION OF REDEEMABLE PREFERENCE SHARES (Section 98)

Name of Company _____ Registration number of Company _____

A. TOTAL SHARE CAPITAL BEFORE REDEMPTION.

NUMBER OF SHARES AUTHORISED	NUMBER OF SHARES ISSUED	*DESCRIPTION OF CLASSES OF SHARES	ISSUED CAPITAL	SHARE PREMIUM ACCOUNT
			R	R
			R	R
			R	R
			R	R
		TOTAL	R	R

B. SHARES REDEEMED OUT OF:

(i) PROFITS (SECTION 98 (1)) ON _____ (DATE)

NUMBER OF SHARES REDEEMED	*DESCRIPTION OF CLASSES OF SHARES	AMOUNT PER SHARE	TOTAL AMOUNT OF CAPITAL REDEEMED
		R	R
		R	R
		R	R
		TOTAL	R

(ii) A FRESH ISSUE OF SHARES (SECTION 98 (2)) ON _____ (DATE)

NUMBER OF SHARES REDEEMED	*DESCRIPTION OF CLASSES OF SHARES	AMOUNT PER SHARE	TOTAL AMOUNT OF CAPITAL REDEEMED
		R	R
		R	R
		R	R
		TOTAL	R

C. SHARES ISSUED IN LIEU OF SHARES REDEEMED IN B (ii) ON _____ (DATE)

NUMBER ISSUED	*DESCRIPTION OF CLASSES OF SHARES	AMOUNT PER SHARE	PREMIUM PER SHARE	SHARE CAPITAL
		R	R	R
		R	R	R
		R	R	R
			TOTAL	R

D. TOTAL SHARE CAPITAL AFTER REDEMPTION AS AT _____ (DATE)

NUMBER OF SHARES AUTHORISED	NUMBER OF SHARES ISSUED	*DESCRIPTION OF CLASSES OF SHARES	ISSUED SHARE CAPITAL	SHARE PREMIUM ACCOUNT
			R	R
			R	R
			R	R
			R	R
		TOTAL	R (A)	R (B)
			TOTAL (A) + (B)	R

*INDICATE PAR VALUE AND NO PAR VALUE SHARE SEPARATELY

DATE _____ SIGNATURE _____
Director/Secretary (Delete title not applicable)

(To be completed by company)

ACKNOWLEDGEMENT OF RECEIPT OF NOTICE OF REDEMTION OF SHARES, DATED _____

Name of Company _____

Postal Address _____

DATE STAMP OF COMPANIES REGISTRATION OFFICE

Specifications
A4 Size White 70 gsm Bond Perforated.

University of Fort Hare
Together in Excellence

BYLAE 2 *(vervolg)*

REPUBLIEK VAN SUID-AFRIKA
MAATSKAPPYWET, 1973

VORM CM25

TOESTEMMING OM AF TE SIEN VAN TYDPERK VAN KENNISGEWING VAN VERGADERING OM SPESIALE BESLUIT TE NEEM

Artikel 199 (3)
Registrasiekantoor vir Maatskappye
Posbus 429, Pretoria, 0001.
Telegramadres "MAATCOM"

Registrasienommer van Maatskappy

Naam van maatskappy _____

_____

Ons, die ondergenoemde lede van bogenoemde maatskappy, stem toe en kom ooreen dat daar op die algemene vergadering van die maatskappy wat op _____ gehou word en waarvan minder as 21 dae kennis gegee is, 'n besluit met betrekking tot _____

_____

_____

_____

_____

as 'n spesiale besluit voorgestel en aanvaar mag word.

University of Fort Hare
Together in Excellence

Datum _____ Handtekening _____

Datum _____ Handtekening _____

Datum _____ Handtekening _____

Datum _____ Handtekening _____

Datum _____ Handtekening _____

Datum _____ Handtekening _____

Ek sertifiseer dat die lede van die maatskappy wie se handtekening hierbo aangebring is die meerderheid in getal van die lede van die maatskappy is wat die reg het om die betrokke vergadering by te woon en daar te stem en dat hulle gesamentlik minstens 95 persent van die totale stemme hou wat deur al die lede van die maatskappy gehou word.

Datum _____ Handtekening _____
Direkteur/Sekretaris

Moet by spesiale besluit wat vir registrasie ingedien word, aangeheg word.

Spesifikasies
A4 Grootte. Wit 70 g/m² Bond.

SCHEDULE 2 *(continued)*

REPUBLIC OF SOUTH AFRICA
COMPANIES ACT, 1973

FORM CM25

CONSENT TO WAIVE PERIOD OF NOTICE OF MEETING TO PASS A SPECIAL RESOLUTION

Section 199 (3)
Companies Registration Office
P.O. Box 429, Pretoria, 0001.
Telegraphic Address: "Maatcom"

Registration number of Company

Name of company _____

_____

We, the undermentioned members of the above-mentioned company, consent and agree that at the general meeting of the company to be held on _____, and of which less than 21 days notice was given, a resolution relating to _____

_____

_____

_____

_____

may be proposed and passed as a special resolution.

Date _____ Signature _____

Date _____ Signature _____

Date _____ Signature _____

Date _____ Signature _____

Date _____ Signature _____

Date _____ Signature _____

I certify that the members of the company whose signatures are affixed above are the majority in number of the members of the company having the right to attend and vote at the meeting concerned and that they hold in aggregate not less than 95 per cent of the total votes held by all the members of the company.

Date _____ Signature _____
Director/Secretary

To be attached to special resolution lodged for registration.

Specifications
A4 Size. White 70 gsm Bond.

University of Fort Hare
Together in Excellence

INHOUD

PROKLAMASIE

No.		BLADSY
R.146	Inwerkingtreding van Artikels 5 (1), 6 (1), en 7 (1), van die Maatskappywysigingswet, 1980	1

Departement van Handel en Verbruikersake

GOEWERMENTSKENNISGEWING

R.1759	Maatskappywet, 1973	2

CONTENTS

PROCLAMATION

No.		PAGE
R.146	Commencement of Sections 5 (1), 6 (1) and 7 (1) of the Companies Amendment Act, 1980	1

Department of Commerce and Consumer Affairs

GOVERNMENT NOTICE

R.1759	Companies Act, 1973	2

University of Fort Hare
Together in Excellence

GEDRUK VIR DIE STAATSDRUKKER, PRETORIA, DEUR KAAP & TRANSVAAL DRUKKERS (EDMS) BPK, KAAPSTAD—BB2715/12 500
PRINTED FOR THE GOVERNMENT PRINTER, PRETORIA, BY CAPE & TRANSVAAL PRINTERS (PTY) LTD, CAPE TOWN—BB2715/12 500

7199
University of Fort Hare
Together in Excellence

STAATSKOERANT
VAN DIE REPUBLIEK VAN SUID-AFRIKA

REPUBLIC OF SOUTH AFRICA
GOVERNMENT GAZETTE

PRYS + 1c AVB 20c PRICE + 1c GST
As 'n Nuusblad by die Poskantoor Geregistreer BUITELANDS 30c ABROAD *Registered at the Post Office as a Newspaper*
POSVRY · POST FREE

Vol. 182] PRETORIA, 29 AUGUSTUS / AUGUST 1980 [No. 7199

PROKLAMASIES

van die Staatspresident van die Republiek van Suid-Afrika

No. 147, 1980

VERKLARING VAN GROEPSGEBIEDE INGEVOLGE DIE WET OP GROEPSGEBIEDE, 1966, TE MOLTENO, DISTRIK MOLTENO, PROVINSIE DIE KAAP DIE GOEIE HOOP

Kragtens artikel 23 van die Wet op Groepsgebiede, 1966 (Wet 36 van 1966), verklaar ek hierby dat die gebied omskryf in die Bylae hiervan, vanaf die datum van publikasie hiervan, 'n gebied is vir okkupasie en grondbesit deur lede van die Gekleurde groep.

Gegee onder my Hand en die Seël van die Republiek van Suid-Afrika te Durban, op hede die Agtste dag van Augustus Eenduisend Negehonderd-en-tagtig.

M. VILJOEN, Staatspresident.

Op las van die Staatspresident-in-rade:

S. J. M. STEYN.

BYLAE

GEKLEURDE GROEP

Vanaf die westelikste baken van Erf 567, Molteno, suidoos met die grense van die volgende erwe langs, sodat hulle uit hierdie gebied uitgesluit word: Genoemde Erf 567, Erf 569, Erf 568, Erf 570 en genoemde Erf 569, tot by Baken G van laasgenoemde erf; dan suidoos met die grense van Erf 571 langs, sodat dit in hierdie gebied ingesluit word, tot by Baken E van Erf 564; dan wes met die grense van genoemde Erf 564 langs, sodat dit uit hierdie gebied uitgesluit word, tot by Baken C daarvan; dan noordoos reguit tot by Baken d van Erf 557; dan noordoos reguit tot by eersgenoemde baken.

No. 148, 1980

WYSIGING VAN PROKLAMASIE 76 VAN 1976 EN VERKLARING VAN GROEPSGEBIEDE INGEVOLGE DIE WET OP GROEPSGEBIEDE, 1966, TE UTRECHT, DISTRIK UTRECHT, PROVINSIE NATAL

Kragtens die bevoegdheid my verleen—

A. by artikel 33 van die Wet op Groepsgebiede, 1966 (Wet 36 van 1966), wysig ek hierby Proklamasie 76 van 1976 deur die uitsluiting uit die gebied

PROCLAMATIONS

by the State President of the Republic of South Africa

No. 147, 1980

DECLARATION OF GROUP AREAS IN TERMS OF THE GROUP AREAS ACT, 1966, AT MOLTENO, DISTRICT OF MOLTENO, PROVINCE OF THE CAPE OF GOOD HOPE

Under section 23 of the Group Areas Act, 1966 (Act 36 of 1966), I hereby declare that the area defined in the Schedule hereto shall, as from the date of publication hereof, be an area for occupation and ownership by members of the Coloured group.

Given under my Hand and the Seal of the Republic of South Africa at Durban on this Eighth day of August, One thousand Nine hundred and Eighty.

M. VILJOEN, State President.

By Order of the State President-in-Council:

S. J. M. STEYN.

SCHEDULE

COLOURED GROUP

From the westernmost beacon of Erf 567, Molteno, south-eastwards along the boundaries of the following erven so as to exclude them from this area: The said Erf 567, Erf 569, Erf 568, Erf 570 and the said Erf 569, to Beacon G of the last-mentioned erf; thence south-eastwards along the boundaries of Erf 571, so as to include it in this area, to Beacon E of Erf 564; thence westwards along the boundaries of the said Erf 564, so as to exclude it from this area, to Beacon C thereof; thence north-eastwards in a straight line to Beacon d of Erf 557; thence north-eastwards in a straight line to the beacon first mentioned.

No. 148, 1980

AMENDMENT OF PROCLAMATION 76 OF 1976 AND DECLARATION OF GROUP AREAS IN TERMS OF THE GROUP AREAS ACT, 1966, AT UTRECHT, DISTRICT OF UTRECHT, PROVINCE OF NATAL

Under the powers vested in me—

A. by section 33 of the Group Areas Act, 1966 (Act 36 of 1966), I hereby amend Proclamation 76 of 1976 by the exclusion from the area defined in

omskryf in paragraaf (b) van die Bylae daarvan van die gebiede omskryf in paragrawe (a) en (b) van die Bylae hiervan; en

B. by artikel 23 van die Wet op Groepsgebiede, 1966 (Wet 36 van 1966), verklaar ek hierby dat—

(i) die gebied omskryf in paragraaf (b) van die Bylae hiervan, vanaf die datum van publikasie hiervan, 'n gebied is vir okkupasie en grondbesit deur lede van die Blanke groep; en

(ii) die gebied omskryf in paragraaf (c) van die Bylae hiervan, vanaf die datum van publikasie hiervan, 'n gebied is vir okkupasie en grondbesit deur lede van die Gekleurde groep.

Gegee onder my Hand en die Seël van die Republiek van Suid-Afrika te Pretoria, op hede die Agt-en-twintigste dag van Julie Eenduisend Negehonderd-en-tagtig.

M. VILJOEN, Staatspresident.

Op las van die Staatspresident-in-rade:

S. J. M. STEYN.

BYLAE

(a) Vanaf die punt waar die suidoostelike grens van Leydstraat, Utrecht, die noordoostelike grens van Rivierstraat kruis, noordoos reguit tot by Baken 130 (Meetstuk 282/1975); dan suidoos met die reguit lyn langs wat genoemde Baken 130 verbind met Baken 131 (Meetstuk 282/1975) tot by die punt waar die 30,48 meter wye Kragserwituut se suidoostelike grens gekruis word; dan suidwes met die suidoostelike grens van genoemde Kragserwituut langs tot by die punt waar die lyn tussen Bakens 132 en 123 (Meestuk 282/1975) gekruis word; dan noordwes reguit tot by die punt waar die suidoostelike grens van Reitzstraat gekruis word; dan noordoos met die suidoostelike grens van genoemde Reitzstraat en die noordoostelike grens van Rivierstraat langs, tot by eersgenoemde punt.

BLANKE GROEP

(b) Vanaf die punt waar die middel van Minnaarstraat, Utrecht, gekruis word deur die middel van Leydstraat, noordoos met die middel van genoemde Leydstraat langs tot by die punt waar dit die noordoostelike grens van Rivierstraat kruis; dan suidoos met die noordoostelike grens van genoemde Rivierstraat langs tot by die punt waar dit die suidoostelike grens van Reitzstraat kruis; dan suidwes met die suidoostelike grens van genoemde Reitzstraat langs tot by die punt waar die middel van Minnaarstraat gekruis word; dan noordwes met die middel van genoemde Minnaarstraat langs tot by eersgenoemde Minnaarstraat langs tot by eersgenoemde punt.

GEKLEURDE GROEP

(c) Vanaf Baken 132 (Meetstuk 282/1975) noordoos reguit tot by Baken 131 (Meetsuk 282/1975); dan suidoos reguit tot by Baken 91 (Meetstuk 1364/1979); dan suidwes reguit tot by Baken 93 (Meetstuk 1364/1979); dan noordoos reguit tot by eersgenoemde baken.

paragraph (b) of the Schedule thereto of the areas defined in paragraphs (a) and (b) of the Schedule hereto; and

B. by section 23 of the Group Areas Act, 1966 (Act 36 of 1966), I hereby declare that—

(i) the area defined in paragraph (b) of the Schedule hereto shall, as from the date of publication hereof, be an area for occupation and ownership by members of the White group; and

(ii) the area defined in paragraph (c) of the Schedule hereto shall, as from the date of publication hereof be an area for occupation and ownership by members of the Coloured group.

Given under my Hand and the Seal of the Republic of South Africa at Pretoria on this Twenty-eighth day of July, One thousand Nine hundred and Eighty.

M. VILJOEN, State President.

By Order of the State President-in-Council:

S. J. M. STEYN.

SCHEDULE

(a) From the point where the south-eastern boundary of Leyd Street, Utrecht, intersects the north-eastern boundary of River Street, north-eastwards in a straight line to Beacon 130 (Surveyor's Record 282/1975); thence south-eastwards along the straight line joining the said Beacon 130 and Beacon 131 (Surveyor's Record 282/1975) to the point where the south-eastern boundary of the 30,48 metre wide Power Servitude is intersected; thence south-westwards along the south-eastern boundary of the said Power Servitude to the point where the line between Beacons 132 and 123 (Surveyor's Record 282/1975) is intersected; thence north-westwards in a straight line to the point where the south-eastern boundary of Reitz Street is intersected; thence north-eastwards along the south-eastern boundary of the said Reitz Street and the north-eastern boundary of River Street to the point first mentioned.

WHITE GROUP

(b) From the point where the centre of Minnaar Street, Utrecht, is intersected by the centre of Leyd Street, north-eastwards along the centre of the said Leyd Street to the point where it intersects the north-eastern boundary of River Street; thence south-eastwards along the north-eastern boundary of the said River Street to the point where it intersects the south-eastern boundary of Reitz Street; thence south-westwards along the south-eastern boundary of the said Reitz Street to the point where the centre of Minnaar Street is intersected; thence north-westwards along the centre of the said Minnaar Street to the point first mentioned.

COLOURED GROUP

(c) From Beacon 132 (Surveyor's Record 282/1975) north-eastwards in a straight line to Beacon 131 (Surveyor's Record 282/1975); thence south-eastwards in a straight line to Beacon 91 (Surveyor's Record 1364/1979); thence south-westwards in a straight line to Beacon 93 (Surveyor's Record 1364/1979); thence north-eastwards in a straight line to the beacon first mentioned.

No. 149, 1980

PROKLAMASIE OM DIE KOMMISSIEWET, 1947, IN DIE GEBIED SUIDWES-AFRIKA VAN TOEPASSING TE MAAK

Kragtens die bevoegdheid my verleen by artikel 38 van die Wet op die Konstitusie van Suidwes-Afrika, 1968 (Wet 39 van 1968), maak ek hierby die wette in die Bylae vervat.

Gegee onder my Hand en die Seël van die Republiek van Suid-Afrika te Pretoria, op hede die Vier-en-twintigste dag van Julie Eenduisend Negehonderd-en-tagtig.

M. VILJOEN, Staatspresident.

Op las van die Staatspresident-in-rade:

P. W. BOTHA.

BYLAE

Invoeging van artikel 6A in Wet 8 van 1947

1. Die volgende artikel word hierby in die Kommissiewet, 1947, na artikel 6 ingevoeg:

"*Toepassing van hierdie Wet in Suidwes-Afrika*

6A. (1) Hierdie Wet is ook in die gebied Suidwes-Afrika, met inbegrip van die Oostelike Caprivi Zipfel, van toepassing.

(2) Artikel 1 word geag gewysig te wees deur die invoeging in subartikel (1) voor die woord 'voor', waar dit die eerste maal voorkom, van die woorde 'of die Administrateur-generaal'.

(3) Enigiets wat kragtens artikel 1, soos dit ingevolge subartikel (2) van hierdie artikel geag word gewysig te wees, deur die Administrateur-generaal by proklamasie gedoen kan word, word deur hom by proklamasie in die *Offisiële Koerant* van die gebied Suidwes-Afrika gedoen.

(4) Enigiets ingevolge subartikel (3) by proklamasie in bedoelde *Offisiële Koerant* gedoen, word geag by proklamasie in die *Staatskoerant* gedoen te wees.".

Kort titel

2. Hierdie Proklamasie heet die Wysigingsproklamasie op Kommissies, 1980.

No. 149, 1980

PROCLAMATION TO APPLY THE COMMISSIONS ACT, 1947, IN THE TERRITORY OF SOUTH WEST AFRICA

Under the powers vested in me by section 38 of the South West Africa Constitution Act, 1968 (Act 39 of 1968), I hereby make the laws set out in the Schedule.

Given under my Hand and the Seal of the Republic of South Africa at Pretoria this Twenty-fourth day of July, One thousand Nine hundred and Eighty.

M. VILJOEN, State President.

By Order of the State President-in-Council:

P. W. BOTHA.

SCHEDULE

Insertion of section 6A in Act 8 of 1947

1. The following section is hereby inserted in the Commissions Act, 1947, after section 6:

"*Application of this Act in South West Africa*

6A. (1) This Act shall apply also in the Territory of South West Africa, including the Eastern Caprivi Zipfel.

(2) Section 1 shall be deemed to be amended by the insertion in subsection (1) before the word 'has' of the words 'or the Administrator-General'.

(3) Anything which may be done under section 1, as it is deemed to be amended in terms of subsection (2) of this section, by the Administrator-General by Proclamation, shall be done by him in the *Official Gazette* of the Territory of South West Africa.

(4) Anything done in terms of subsection (3) by proclamation in the said *Official Gazette*, shall be deemed to have been done by proclamation in the *Gazette*.".

Short title

2. This Proclamation shall be called the Commissions Amendment Proclamation, 1980.

No. 150, 1980

WELTEVREDEN-BESPROEIINGSDISTRIK, DISTRIK MARICO, TRANSVAAL.—AFSKAFFING

Nademaal artikel 78 (1) (b) van die Waterwet, 1956 (Wet 54 van 1956), bepaal dat die Staatspresident, op aanbeveling van die Minister, 'n besproeiingsdistrik kan afskaf wanneer op 'n spesiale vergadering vir dié doel belê, persone wat 'n meerderheidstem volgens die jongste kieserslys van die besproeiingsdistrik verteenwoordig en wat geregtig sou wees om by 'n verkiesing van lede van die raad vir daardie distrik te stem indien 'n verkiesing dan gehou sou word, ten gunste van die afskaffing van sodanige besproeiingsdistrik stem en 'n versoekskrif by die Minister indien waarin versoek word dat bedoelde besproeiingsdistrik afgeskaf word:

En nademaal die bepalings van genoemde Wet met betrekking tot sodanige afskaffing van 'n besproeiingsdistrik nagekom is;

So is dit dat ek, kragtens die bevoegdheid my verleen by genoemde artikel 78 (1) (b), hierby verklaar dat die Weltevreden-besproeiingsdistrik, distrik Marico, Transvaal, soos ingestel by Proklamasie 20 van 1959, afgeskaf word.

No. 150, 1980

WELTEVREDEN IRRIGATION DISTRICT, DISTRICT OF MARICO, TRANSVAAL. — DISESTABLISHMENT

Whereas section 78 (1) (b) of the Water Act, 1956 (Act 54 of 1956), provides that the State President may, on the recommendation of the Minister, disestablish an irrigation district whenever, at a special meeting convened for the purpose, persons representing a majority of votes according to the latest voters' list of that irrigation district, who would be qualified to vote at an election of members of the board of such district if an election were then held, vote in favour of the disestablishment of such irrigation district and submit to the Minister a petition requesting that the said irrigation district be disestablished;

And whereas the provisions of the said Act in respect of such disestablishment of an irrigation district have been complied with;

Now, therefore, under and by virtue of the powers vested in me by the said section 78 (1) (b), I hereby declare that the Weltevreden Irrigation District, District of Marico, Transvaal, as constituted by Proclamation 20 of 1959, shall be disestablished.

Gegee onder my Hand en die Seël van die Republiek van Suid-Afrika te Durban, op hede die Agtste dag van Augustus Eenduisend Negehonderd-en-tagtig.

M. VILJOEN, Staatspresident

Op las van die Staatspresident-in-rade:

A. J. RAUBENHEIMER.

Given under my Hand and the Seal of the Republic of South Africa at Durban this Eighth day of August, One thousand Nine hundred and Eighty.

M. VILJOEN, State President.

By Order of the State President-in-Council:

A. J. RAUBENHEIMER.

GOVERNMENT NOTICES

DEPARTEMENT VAN BINNELANDSE SAKE

No. 1761 29 Augustus 1980

WET OP VREEMDELINGE, 1937

VANSVERANDERING.—CARSTENS IN STOWIK

Dit het die Staatspresident behaag om, kragtens die bepalings van artikel 9 van die Wet op Vreemdelinge, 1937 (Wet 1 van 1937), Francis Carstens en Aida Carstens, woonagtig te Hendrikstraat 7, Vredenburg, te magtig om die van Stowik, aan te neem.

No. 1762 29 Augustus 1980

WET OP VREEMDELINGE, 1937

VANSVERANDERIN –NICHOLAS IN MORRISON REID

Dit het die Staatspresident behaag om, kragtens die bepalings van artikel 9 van die Wet op Vreemdelinge, 1937 (Wet 1 van 1937), Kim Elizabeth Nicholas en Lea Suzan Nicholas, woonagtig te Keurboomstraat 45, Sandowner, Randburg, te magtig om die van Morrison Reid aan te neem.

No. 1763 29 Augustus 1980

WET OP VREEMDELINGE, 1937

VANSVERANDERING.—SCHEEPERS IN DE CHAZAL

Dit het die Staatspresident behaag om, kragtens die bepalings van artikel 9 van die Wet op Vreemdelinge, 1937 (Wet 1 van 1937), Nicolaas Frans Scheepers en sy vrou Jeanette Elizabeth, gebore Muller, woonagtig te Endymionstraat 318, Mondeor, Johannesburg, te magtig om die van De Chazal aan te neem.

No. 1764 29 Augustus 1980

WET OP VREEMDELINGE, 1937

VANSVERANDERING.—JORDAAN IN JORDAN

Dit het die Staatspresident behaag om, kragtens die bepalings van artikel 9 van die Wet op Vreemdelinge, 1937 (Wet 1 van 1937), Brian-Peter Jordaan en sy vrou Marilyn Lois, gebore Courland, woonagtig te Milnerrylaan 132, Rooseveltpark, Johannesburg, te magtig om die van Jordan aan te neem.

No. 1780 29 Augustus 1980

WET OP VREEMDELINGE, 1937

VANSVERANDERING.—CHANIN IN TULIPAN

Dit het die Staatspresident behaag om, kragtens die bepalings van artikel 9 van die Wet op Vreemdelinge, 1937 (Wet 1 van 1937), Jonathan Chanin, woonagtig te Joubertweg 39, Groenpunt, Kaapstad, te magtig om die van Tulipan aan te neem.

GOEWERMENTSKENNISGEWINGS

DEPARTMENT OF THE INTERIOR

No. 1761 29 August 1980

ALIENS ACT, 1937

CHANGE OF SURNAME.—CARSTENS TO STOWIK

The State President has been pleased, under the provisions of section 9 of the Aliens Act, 1937 (Act 1 of 1937), to authorise Francis Carstens and Aida Carstens, residing at 7 Hendrik Street, Vredenburg, to assume the surname of Stowik.

No. 1762 29 August 1980

ALIENS ACT, 1937

CHANGE OF SURNAME.—NICHOLAS TO MORRISON REID

The State Preident has been pleased, under the provisions of section 9 of the Aliens Act, 1937 (Act 1 of 1937), to authorise Kim Elizabeth Nicholas and Lea Suzan Nicholas, residing at 45 Keurboom Street, Sandowner, Randburg, to assume the surname of Morrison Reid.

No. 1763 29 August 1980

ALIENS ACT, 1937

CHANGE OF SURNAME.—SCHEEPERS TO DE CHAZAL

The State President has been pleased, under the provisions of section 9 of the Aliens Act, 1937 (Act 1 of 1937), to authorise Nicolaas Frans Scheepers and his wife Jeanette Elizabeth, born Muller, residing at 318 Endymion Street, Mondeor, Johannesburg, to assume the surname of De Chazal.

No. 1764 29 August 1980

ALIENS ACT, 1937

CHANGE OF SURNAME.—JORDAAN TO JORDAN

The State President has been pleased, under the provisions of section 9 of the Aliens Act, 1937 (Act 1 of 1937), to authorise Brian-Peter Jordaan and his wife Marilyn Lois, born Courland, residing at 132 Milner Drive, Roosevelt Park, Johannesburg, to assume the surname of Jordan.

No. 1780 29 August 1980

ALIENS ACT, 1937

CHANGE OF SURNAME.—CHANIN TO TULIPAN

The State President has been pleased, under the provisions of section 9 of the Aliens Act, 1937 (Act 1 of 1937), to authorise Jonathan Chanin, residing at 39 Joubert Road, Green Point, Cape Town, to assume the surname of Tulipan.

University of Pretoria
Together in Excellence

No. 1785 29 Augustus 1980

WET OP VREEMDELINGE, 1937

VANSVERANDERING.—LEDOYEN IN SMORENBURG

Dit het die Staatspresident behaag om, kragtens die bepalings van artikel 9 van die Wet op Vreemdelinge, 1937 (Wet 1 van 1937), Anthony Michael Ledoyen, sy vrou Sheila Virginia, gebore Reitz, en sy kinders Sean Anthony, Craig Michael, Clinton John en Lisa Kathleen, woonagtig te Caique Close 2, Sun Valley, Vishoek, te magtig om die van Smorenburg, aan te neem.

No. 1785 29 August 1980

ALIENS ACT, 1937

CHANGE OF SURNAME.—LEDOYEN TO SMORENBURG

The State President has been pleased, under the provisions of section 9 of the Aliens Act, 1937 (Act 1 of 1937), to authorise Anthony Michael Ledoyen, his wife Sheila Virginia, born Reitz, and his children Sean Anthony, Craig Michael, Clinton John and Lisa Kathleen, residing at 2 Caique Close, Sun Valley, Fish Hoek, to assume the surname of Smorenburg.

DEPARTEMENT VAN FINANSIES

No. 1820 29 Augustus 1980

AANSTELLING VAN DIREKTEURE VAN DIE NASIONALE FINANSIEKORPORASIE VAN SUID-AFRIKA

Dit het die Staatspresident behaag om kragtens die bevoegdheid hom by artikel 9 van die Wet op die Nasionale Finansiekorporasie, 1949 (Wet 33 van 1949), verleen, ondervermelde persone met ingang van 1 September 1980 vir 'n tydperk van drie jaar as direkteure van die Nasionale Finansiekorporasie van Suid-Afrika aan te stel:

Die heer Robin Anthony Hope as verteenwoordiger van beherende goudmynmaatskappye.

Die heer Julian Ogilvie Thompson as verteenwoordiger van beherende diamantmynmaatskappye.

Die heer Arthur Robert Michael Aldworth as verteenwoordiger van handelsbanke.

Die heer Gerhardus Zacharias Liebenberg as verteenwoordiger van ander finansiële instellings.

DEPARTMENT OF FINANCE

No. 1820 29 August 1980

APPOINTMENT OF DIRECTORS OF THE NATIONAL FINANCE CORPORATION OF SOUTH AFRICA

The State President, acting under the authority of section 9 of the National Finance Corporation Act, 1949 (Act 33 of 1949), has been pleased to appoint the undermentioned persons as directors of the National Finance Corporation of South Africa for a period of three years with effect from 1 September 1980:

Robin Anthony Hope, Esquire, as representative of gold mining houses.

Julian Ogilvie Thompson, Esquire, as representative of diamond mining houses.

Arthur Robert Michael Aldworth, Esquire, as representative of commercial banks.

Gerhardus Zacharias Liebenberg, Esquire, as representative of other financial institutions.

DEPARTEMENT VAN GEMEENSKAPSBOU

No. 1786 29 Augustus 1980

WET OP HUURGELDE, 1976

VERKLARING DAT SEKER WONINGS, MOTORHUISE, MOTORSTAANPLEKKE EN BEDIENDEKAMERS VAN HUURBEHEER ONTHEF IS

Kragtens die bevoegdheid my verleen by artikel 51 (g) van die Wet op Huurbeheer, 1976 (Wet 80 van 1976), verklaar ek, Stephanus Francois Kotzé, Adjunk-minister van Gemeenskapsbou, hierby dat die wonings in die woonstelgebou genoem in die Bylae hiervan, asook die motorhuise, motorstaanplekke en bediendekamers geleë op enige plek op grond wat deel uitmaak van grond wat geokkupeer word deur of gebruik word in verband met sodanige wonings, vanaf datum van publikasie hiervan van huurbeheer onthef is.

S. F. KOTZÉ, Adjunk-minister van Gemeenskapsbou.

BYLAE

Naam van woonstelgebou	*Ligging*
Cliffsea	Standplaas 174, Sandersweg, Bantrybaai, Kaapstad.

DEPARTMENT OF COMMUNITY DEVELOPMENT

No. 1786 29 August 1980

RENT CONTROL ACT, 1976

DECLARATION THAT CERTAIN DWELLINGS, GARAGES, PARKING SPACES, ROOMS AND SERVANT'S ROOMS ARE EXEMPTED FROM RENT CONTROL

Under the powers vested in me by section 51 (g) of the Rent Control Act, 1976 (Act 80 of 1976), I, Stephanus Francois Kotzé, Deputy Minister of Community Development, hereby declare that the dwellings in the block of flats mentioned in the Schedule hereto, as well as the garages, parking spaces and servants' rooms situated anywhere upon land forming part of land occupied by or used in connection with the aforementioned dwellings, are exempted from rent control as from the date of publication hereof.

S. F. KOTZÉ, Deputy Minister of Community Development.

SCHEDULE

Name of block of flats	*Situation*
Cliffsea	Stand 174, Sanders Road, Bantry Bay, Cape Town.

University of Pretoria
Leader in Excellence

DEPARTEMENT VAN NASIONALE OPVOEDING

No. 1760 29 Augustus 1980

WET OP NASIONALE GEDENKWAARDIGHEDE, No. 28 VAN 1969

VERKLARING VAN DIE GROOTKERK IN BOSMANSTRAAT, PRETORIA

Kragtens die bevoegdheid my verleen by artikel 10 (1) van die Wet op Nasionale Gedenkwaardighede, 1969 (Wet 28 van 1969), verklaar ek, Teunis Nicolaas Hendrik Janson, Minister van Nasionale Opvoeding, hierby die Grootkerk in Bosmanstraat, Pretoria, met een meter grond daaromheen, tot nasionale gedenkwaardigheid.

Beskrywing

Die Grootkerk met een meter grond daaromheen, synde geleë op die eiendom bekend as die restant van Gekonsolideerde Erf 270 (nou bekend as die restant van Erf 3071), geleë aan Vermeulen- en Bosmanstraat in die stad Pretoria, groot vyf-en-twintigduisend vyfhonderd vyf-en-dertig (25 535) vierkante voet.

Sertifikaat van Verenigde Titel 21469/1951, gedateer 30 Augustus 1951.

Historiese en argitektoniese belang

Die hoeksteen van hierdie gebou, wat deur Klaas van Rijsse en Kraan & Weijers in die Hollandse Renaissance-styl ontwerp is, is op 11 Mei 1903 deur genl Louis Botha gelê en op 30 September 1904 is die kerk met 'n inwydingsrede deur ds. Andrew Murray ingewy. Verskeie historiese geleenthede het reeds in die gebou plaasgevind onder andere die inswering in 1961 van adv. C. R. Swart as die eerste Staatspresident van die Republiek van Suid-Afrika. 10/2/802.

T. N. H. JANSON, Minister van Nasionale Opvoeding.

DEPARTMENT OF NATIONAL EDUCATION

No. 1760 29 August 1980

NATIONAL MONUMENTS ACT, No. 28 OF 1969

DECLARATION OF THE GROOTKERK IN BOSMAN STREET, PRETORIA

By virtue of the powers vested in me by section 10 (1) of the National Monuments Act, 1969 (Act 28 of 1969), I, Teunis Nicolaas Hendrik Janson, Minister of National Education, hereby declare the Grootkerk in Bosman Street, Pretoria, with one metre of surrounding land, to be a national monument.

Description

The Grootkerk with one metre of surrounding land, situated on the property known as the remainder of Consolidated Erf 270 (now known as the remainder of Erf 3071), situated on Vermeulen and Bosman Streets, in the City of Pretoria, measuring twenty-five thousand five hundred and thirty-five (25 535) square feet.

Certificate of Consolidated Title 21469/1951, dated 30 August 1951.

Historical and architectural interest

The corner stone of this building, which was designed by Klaas van Rijsse and Kraan & Weijers in the style of the Dutch Renaissance, was laid by General Louis Botha on 11 May 1903 and the church was inaugurated on 30 September 1904 when the Reverend Andrew Murray delivered the first sermon. Several historic events have taken place in the building, including the swearing in of Advocate C. R. Swart as the first State President of the Republic of South Africa in 1961. 10/2/802.

T. N. H. JANSON, Minister of National Education.

DEPARTEMENT VAN SAMEWERKING EN ONTWIKKELING

No. 1774 29 Augustus 1980

TWEEDE KANGWANE- WYSIGINGSWET OP DIE BETALING EN VOORREGTE VAN LEDE VAN DIE WETGEWENDE VERGADERING, 1980 (WET 7 VAN 1980)

Hierby word bekendgemaak dat die Staatspresident sy goedkeuring geheg het aan die volgende Wet wat deur die KaNgwane- Wetgewende Vergadering aangeneem is en wat hierby vir algemene inligting gepubliseer word:

GEBIED VAN DIE KANGWANE- WETGEWENDE VERGADERING

WET

Tot wysiging van die KaNgwane-wet op die Betaling en Voorregte van Lede van die Wetgewende Vergadering, 1978, ten einde voorsiening te maak vir verhoogde salarisse en toelaes aan Lede van die Uitvoerende Raad en Wetgewende Vergadering en aangeleenthede wat daarmee in verband staan

Daar word deur die KaNgwane- Wetgewende Vergadering verorden:

Vervanging van artikel 1 *van Wet* 2 *van* 1978

1. Artikel 1 van die KaNgwane-wet op die Betaling en Voorregte van Lede van die Wetgewende Vergadering, 1978 (hieronder die Hoofwet genoem), word hierby deur die volgende artikel vervang:

DEPARTMENT OF CO-OPERATION AND DEVELOPMENT

No. 1774 29 August 1980

SECOND KANGWANE PAYMENT AND PRIVILEGES OF MEMBERS OF THE LEGISLATIVE ASSEMBLY AMENDMENT ACT, 1980 (ACT 7 OF 1980)

It is hereby notified that the State President has approved of the following Act which was passed by the KaNgwane Legislative Assembly and which is hereby published for general information:

AREA OF THE KANGWANE LEGISLATIVE ASSEMBLY

ACT

To amend the KaNgwane Payment and Privileges of Members of the Legislative Assembly Act, 1978, in order to provide for increased salaries and allowances to members of the Executive Council and Legislative Assembly and for matters incidental thereto.

Be it enacted by the KaNgwane Legislative Assembly:

Substitution of section 1 *of Act* 2 *of* 1978

1. The following section is hereby substituted for section 1 of the KaNgwane Payment and Privileges of Members of the Legislative Assembly Act, 1978 (hereinafter referred to as the principal Act):

"*Woordomskrywings*

1. In hierdie Wet, tensy uit die samehang anders blyk, het 'n woord of uitdrukking waaraan 'n bete kenis in die KaNgwane-grondwetproklamasie, 1977 (Proklamasie R. 214 van 1977) geheg word, die betekenis aldus daaraan geheg en beteken—

'assistent-sweep' 'n sweep (behalwe 'n hoofsweep) wat aan die begin van elke sessie of na gelang van omstandighede deur die Hoof-Uitvoerenderaadslid aangewys word as redelikerwys nodig vir die vlot werking van die Wetgewende Vergadering: Met dien verstande dat hoogstens drie assistent-swepe aldus aangewys word;

'Grondwetproklamasie' die KaNgwane-grondwetproklamasie, 1977 (Proklamasie R. 214 van 1977);

'Hoof-Uitvoerenderaadslid' die Hoof-Uitvoerenderaadslid verkies ingevolge artikel 13 van die Grondwetproklamasie;

'Hoofsweep' 'n hoofsweep wat deur die Hoof-Uitvoerenderaadslid uit die geledere van die lede van die Wetgewende Vergadering aangewys word;

'Uitvoerenderaadslid' 'n Uitvoerenderaadslid aangestel kragtens artikel 14 van die Grondwetproklamasie.".

Vervanging van artikel 2 *van Wet* 2 *van* 1978 *soos gewysig deur artikel* 1 *van Wet* 2 *van* 1979

2. Artikel 2 van die Hoofwet word hierby deur die volgende artikel vervang:

"*Salarisse van lede*

2. Daar is betaalbaar—

(a) aan die Hoof-Uitvoerenderaadslid, 'n salaris van R23 400 per jaar;

(b) aan elke Uitvoerenderaadslid (behalwe die Hoof-Uitvoerenderaadslid), 'n salaris van R21 192 per jaar;

(c) aan die Voorsitter, 'n salaris van R6 840 per jaar;

(d) aan die Ondervoorsitter, 'n salaris van R6 300 per jaar;

(e) aan die Hoofsweep in die Wetgewende Vergadering, 'n salaris van R6 300 per jaar;

(f) aan elke assistent-sweep, 'n salaris van R5 760 per jaar;

(g) aan elke lid van die Wetgewende Vergadering [behalwe iemand in enige van die paragrawe (a) tot en met (f) bedoel], 'n salaris van R5 256 per jaar.".

Vervanging van artikel 3 *van Wet* 2 *van* 1978

3. Artikel 3 van die Hoofwet word hierby deur die volgende artikel vervang:

"*Nie-belasbare toelaag*

3. Daar is betaalbaar—

(a) aan die Hoof-Uitvoerenderaadslid, 'n nie-belasbare toelaag van R1 980 per jaar;

(b) aan elke Uitvoerenderaadslid (behalwe die Hoof-Uitvoerenderaadslid), 'n nie-belasbare toelaag van R1 440 per jaar.".

Kort titel en inwerkingtreding

4. Hierdie Wet heet die Tweede KaNgwane- Wysigingswet op die Betaling en Voorregte van Lede van die Wetgewende Vergadering, 1980, en word geag op 1 April 1980 in werking te getree het.

(R223/4/2/1)

"*Definitions*

1. In this Act, unless the context otherwise indicates, any word or expression to which a meaning has been assigned in the KaNgwane Constitution Proclamation, 1977 (Proclamation R. 214 of 1977) shall bear the meaning so assigned thereto, and—

'assistant whip' means a whip (other than a Chief Whip) designated by the Chief Executive Councillor at the commencement of each session, or as circumstances require, as being reasonably necessary for the smooth working of the Legislative Assembly: Provided that not more than three assistant whips shall be so designated;

'Chief Executive Councillor' means the Chief Executive Councillor elected in terms of section 13 of the Constitution Proclamation;

'Chief Whip' means a chief whip designated by the Chief Executive Councillor from the ranks of the members of the Legislative Assembly;

'Constitution Proclamation' means the KaNgwane Constitution Proclamation, 1977 (Proclamation R. 214 of 1977);

'Executive Councillor' means an Executive Councillor appointed under section 14 of the Constitution Proclamation.".

Substitution of section 2 *of Act* 2 *of* 1978 *as amended by section* 1 *of Act* 2 *of* 1979

2. The following section is hereby substituted for section 2 of the principal Act:

"*Salaries of members*

2. There shall be payable—

(a) to the Chief Executive Councillor, a salary of R23 400 per annum;

(b) to every Executive Councillor (other than the Chief Executive Councillor), a salary of R21 192 per annum;

(c) to the Chairman, a salary of R6 840 per annum;

(d) to the Deputy Chairman, a salary of R6 300 per annum;

(e) to the Chief Whip in the Legislative Assembly, a salary of R6 300 per annum;

(f) to each assistant whip, a salary of R5 760 per annum;

(g) to every member of the Legislative Assembly [other than a person referred to in any of the paragraphs (a) to (f) inclusive], a salary of R5 256 per annum.".

Substitution of section 3 *of Act* 2 *of* 1978

3. The following section is hereby substituted for section 3 of the principal Act:

"*Non-taxable allowance*

3. There shall be payable—

(a) to the Chief Executive Councillor, a non-taxable allowance of R1 980 per annum;

(b) to every Executive Councillor (other than the Chief Executive Councillor), a non-taxable allowance of R1 440 per annum.".

Short title and commencement

4. This Act shall be called the Second KaNgwane Payment and Privileges of Members of the Legislative Assembly Amendment Act, 1980, and shall be deemed to have come into operation on 1 April 1980.

(R223/4/2/1)

University of Pretoria
Together in Excellence

No. 1775 29 Augustus 1980

KANGWANE-WET OP DIE LISENSIËRING EN BEHEER VAN HONDE, 1980 (WET 5 VAN 1980)

Hierby word bekendgemaak dat die Staatspresident sy goedkeuring geheg het aan die volgende Wet wat deur die KaNgwane- Wetgewende Vergadering aangeneem is en wat hierby vir algemene inligting gepubliseer word:

GEBIED VAN DIE KANGWANE- WETGEWENDE VERGADERING

WET

Om voorsiening te maak vir die registrasie en beheer van honde in die gebied van die KaNgwane- Wetgewende Vergadering.

Daar word deur die KaNgwane- Wetgewende Vergadering verorden:

Woordomskrywing

1. In hierdie Wet, tensy uit die samehang anders blyk, beteken—

"eienaar" met betrekking tot 'n hond, enigeen aan wie 'n hond toevertrou is of wat beheer oor 'n hond het asook die okkupeerder van enige perseel en die kraalhoof van enige kraal waar enige hond toegelaat word om te lewe of te bly, tensy sodanige okkupeerder of kraalhoof bewys dat hy nie die eienaar van sodanige hond is nie en dat die hond sonder sy goedkeuring of wete toegelaat is om op sodanige perseel of by sodanige kraal te lewe of te bly;

"gemagtigde beampte"—

(a) 'n magistraat aangestel kragtens die bepalings van die Wet op Landdroshowe, 1944 (Wet 32 van 1944);

(b) 'n persoon deur 'n magistraat aangestel vir die doel om gelde ingevolge hierdie Wet in te samel in 'n spesifieke gebied in die distrik waaroor sodanige magistraat jurisduksie het;

(c) vir doeleindes van paragrawe (b) en (c) van artikel 9 ook 'n assistent bedoel in artikel 8 (1); en

(d) 'n voltydse lid van die Suid-Afrikaanse Polisie;

"hierdie Wet" sluit in enige regulasies daarkragtens gemaak;

"KaNgwane" die gebied waarvoor die KaNgwane-Wetgewende Vergadering ingestel is;

"Raadslid" die Uitvoerende Raadslid verantwoordelik vir die Departement van Owerheidsake en Finansies;

"registrasiesertifikaat" 'n registrasiesertifikaat bedoel in artikel 4;

"stamowerheid" 'n stamowerheid ingestel ingevolge die bepalings van die Wet op Swart Owerhede, 1951 (Wet 68 van 1951);

"voorgeskryf" voorgeskryf ingevolge hierdie Wet.

Aanspreeklikheid om hond te registreer en lisensie geld te betaal

2. Niemand mag 'n hond wat ses maande oud of ouer is, aanhou nie, tensy hy sodanige hond laat registreer het en die voorgeskrewe heffing ten opsigte van die hond betaal het.

Registrasie van honde

3. (1) Elke eienaar doen binne 30 dae na die inwerkingtreding van hierdie Wet of, indien die hond dan nog nie in sy besit of onder sy beheer gekom het nie, binne 30 dae nadat daardie hond in sy besit of onder sy beheer gekom het, en daarna voor of op 31 Maart van elke daaropvolgende jaar, aansoek om die registrasie van sodanige hond.

No. 1775 29 August 1980

KANGWANE LICENSING AND CONTROL OF DOGS ACT, 1980 (ACT 5 OF 1980)

It is hereby notified that the State President has approved of the following Act which was passed by the KaNgwane Legislative Assembly and which is hereby published for general information:

AREA OF THE KANGWANE LEGISLATIVE ASSEMBLY

ACT

To provide for the registration and control of dogs in the area of the KaNgwane Legislative Assembly.

Be it enacted by the KaNgwane Legislative Assembly:

Definitions

1. In this Act, unless the context otherwise indicates—

"authorised officer" means—

(a) a magistrate appointed in terms of the provisions of the Magistrates' Courts Act, 1944 (Act 32 of 1944);

(b) a person appointed by a magistrate for the purpose of collecting fees in terms of this Act in a specific area within the district over which such magistrate has jurisdiction;

(c) for the purpose of paragraphs (b) and (c) of section 9 also an assistant referred to in section 8 (1); and

(d) a full time member of the South African Police;

"Councillor" means the Executive Councillor responsible for the department of Authority Affairs and Finance;

"KaNgwane" means the area for which the KaNgwane Legislative Assembly has been established;

"owner" in relation to a dog, includes any person who has the custody or control of a dog, and also the occupier of any premises and the kraalhead of a kraal where any dog is permitted to live or remain, unless such occupier or kraalhead proves that such dog is not owned by him and was permitted to live or remain on such premises or at such kraal without his sanction or knowledge;

"prescribed" means prescribed under this Act;

"registration certificate" means a registration certificate referred to in section 4;

"this Act" includes any regulations made thereunder;

"tribal authority" means a tribal authroity established in terms of the provisions of the Black Authorities Act, 1951 (Act 68 of 1951).

Liability to register dog and to pay levy

2. No person shall keep a dog that is six months old or older, unless he has caused such dog to be registered and has paid the prescribed levy in respect of the dog.

Registration of dogs

3. (1) Each owner shall apply, within 30 days after the commencement of this Act or, if the dog has then not yet come into his possession or under his control, within 30 days after the dog has come into his possession or under his control, and thereafter on or before 31 March of every ensuing year, for the registration of such dog.

University of Fort Hare
Together in Excellence

(2) Die registrasie van 'n hond word jaarliks gedoen en bly geldig tot en met 31 Desember van die jaar waarin dit gedoen is.

Registrasiesertifikaat

4. (1) 'n Registrasiesertifikaat word in die naam van die eienaar van 'n hond teen betaling van die in artikel 5 bedoelde heffing op aansoek uitgereik.

(2) Die eienaar van enige hond ten opsigte waarvan 'n registrasiesertifikaat uitgereik is, bewaar die sertifikaat te alle tye gedurende die geldigheidsduur daarvan en toon dit op aanvraag van 'n gemagtigde beampte aan sodanige beampte.

(3) Geen registrasiesertifikaat kan van een persoon aan 'n ander persoon oorgedra word nie.

(4) Indien 'n registrasiesertifikaat verlore of vernietig raak, kan 'n duplikaat daarvan teen betaling van 50c aan die voormalige houer daarvan uitgereik word.

Heffings

5. Ten tye van die registrasie van 'n hond betaal die eienaar, behoudens die bepalings van hierdie Wet, ten opsigte van elke hond wat hy binne KaNgwane aanhou—

(a) R10 indien, na die mening van die gemagtigde beampte, sodanige hond van die jaghond- of windhond-klas of 'n dergelike soort hond is;

(b) R3 vir 'n teef;

(c) R2 vir enige ander soort hond:

Met dien verstande dat—

(i) die eienaar van 'n hond bedoel in paragraaf (a) wat gegrief voel oor 'n beslissing van die gemagtigde beampte ingevolge bedoelde paragraaf, die reg het om te appelleer na die magistraat van die distrik waarin hy woonagtig is en die beslissing van sodanige magistraat is afdoende;

(ii) in die geval van 'n teef wat gesteriliseer is en waarvan die insnyding gemaak deur die veearts nie duidelik sigbaar is nie, eis die gemagtigde beampte van die eienaar 'n sertifikaat deur sodanige veearts dat sodanige teef gesteriliseer is;

(iii) by aansoek om 'n lisensie deur 'n blinde persoon, mag die magistraat van die distrik waarin hy woon, magtiging verleen vir die uitreiking van 'n gratis registrasiesertifikaat ten opsigte van een hond wat deur sodanige persoon as 'n gidshond gebruik word; en

(iv) die eienaar van 'n hond wat behoorlik gelisensieer is in enige ander deel van die Republiek wanneer hy sodanige hond in KaNgwane inbring, vrygestel is van die betaling van die voorgeskrewe lisensiegeld vir die lopende jaar en die lisensie uitgereik aan so 'n eienaar ten opsigte van sodanige hond, word geag 'n registrasiesertifikaat te wees, uitgereik ingevolge hierdie Wet.

Beskikking van heffings

6. (1) 50 persent van alle heffings wat ingevolge hierdie Wet in die regsgebied van 'n stamowerheid ingevorder is sal aan sodanige stamowerheid toeval en 50 persent word in die KaNgwane Inkomstefonds gestort.

(2) Alle heffings ingevorder in gebiede waar daar geen stamowerheid bestaan nie word in die KaNgwane Inkomstefonds gestort.

Uitreiking van registrasiesertifikaat en invordering van heffings

7. Aansoek om 'n registrasiesertifikaat word gedoen by, en die voorgeskrewe heffing word betaal aan die gemagtigde beampte aangestel vir die gebied waar die

(2) The registration of a dog shall be done annually and shall remain valid until and including 31 December of the year during which it has been done.

Registration certificate

4. (1) A registration certificate shall be issued on application, in the name of the owner of a dog on payment of the levy referred to in section 5.

(2) The owner of any dog in respect of which a registration certificate has been issued, shall preserve the certificate at all times for the period of validity thereof and shall produce it on demand of any authorised officer to such officer.

(3) No registration certificate shall be transferable from one person to another person.

(4) If any registration certificate is lost or destroyed, a duplicate thereof may be issued to the former holder thereof on payment of 50c.

Levies

5. At the time of the registration of a dog the owner shall pay, subject to the provisions of this Act, in respect of every dog which is kept by him within KaNgwane—

(a) R10 if, in the opinion of the authorised officer, such dog is of the hunting dog type, greyhound strain, or a dog of similar kind;

(b) R3 for a bitch; and

(c) R2 for any other kind of dog:

Provided that—

(i) the owner of a dog referred to in paragraph (a) who is aggrieved by a decision of the authorised officer in terms of the said paragraph, shall have the right of appeal to the magistrate of the district in which he resides and the decision of such magistrate shall be final;

(ii) in the case of a bitch which has been spayed and of which the incision made by the veterinary surgeon is not clearly discernable, the authorised officer shall demand from the owner a certificate by such veterinary surgeon to the effect that such bitch has been spayed;

(iii) upon application for a licence by a blind person, the magistrate of the district in which he resides may authorise the issue of a registration certificate, free of charge, in respect of one dog used by such blind person as a guide dog; and

(iv) the owner of a dog duly licenced in a part of the Republic of South Africa, other than KaNgwane shall, when introducing such dog into KaNgwane, be exempted from payment of the prescribed licence fee for he current year, and the licence issued to such owner in respect of such dog shall be deemed to be a registration certificate issued in terms of this Act.

Disposal of levies

6. (1) 50 per cent of all levies collected in terms of this Act within the area of jurisdiction of a tribal authority shall accrue to such Tribal Authority and 50 per cent shall be paid to the KaNgwane Revenue Fund.

(2) All levies collected in terms of this Act in areas in respect of which no Tribal Authority exists, shall be paid to the KaNgwane Revenue Fund.

Issue of registration certificates and collection of levies

7. Application for a registration certificate shall be made and the prescribed levy shall be paid to the authorised officer appointed for the area where

eienaar van 'n hond hom bevind op die eerste dag indien hy nie 'n permanente woning het nie, waar die eienaar van 'n hond hom bevind op die eerste dag van Januarie van die betrokke jaar.

Reg van toegang van gemagtigde beampte en strawwe vir dwarsboming van hom

8. (1) 'n Gemagtigde beampte kan, vir doeleindes wat in verband staan met die uitvoering van die bepalings van hierdie Wet te alle redelike tye en sonder voorafgaande kennisgewing, enige grond of perseel betree om sodanige ondersoek en navraag te doen as wat hy nodig ag, en kan 'n assistent met hom saamneem op sodanige grond of perseel.

(2) Enige gemagtigde beampte kan, terwyl hy op sodanige grond of perseel is of op enige ander tyd of plek, òf alleen òf in die teenwoordigheid van 'n ander persoon, enige persoon, wat na sy mening enige inligting deur hom verlang vir enige doel, kan verstrek, na goeddunke ondervra.

(3) Enige persoon wat grond of 'n perseel okkupeer en enige werknemer van sodanige persoon moet, op versoek van 'n gemagtigde beampte, sodanige beampte hulpsaam wees om sodanige grond of perseel te betree vir die uitoefening van sy bevoegdhede ingevolge subartikels (1) en (2).

(4) Enige persoon wat—

(a) 'n valse verklaring aan 'n gemagtigde beampte maak wetende dat dit vals is; of

(b) weier of versuim om op enige vraag gestel deur 'n gemagtigde beampte in die uitoefening van sy bevoegdhede of pligte ingevolge hierdie Wet te beantwoord; of

(c) weier of versuim om te voldoen aan 'n wettige versoek deur 'n gemagtigde beampte in die uitoefening van sy bevoegdhede en pligte; of

(d) hom verset teen 'n gemagtigde beampte of sodanige beampte verhinder of belemmer in die uitoefening van sy bevoegdhede of pligte; of

(e) hom valslik voordoen as 'n gemagtigde beampte; of

(f) die bepalings van subartikel (3) oortree of versuim om daaraan te voldoen;

is skuldig aan 'n misdryf en by skuldigbevinding strafbaar met 'n boete van hoogstens R100 en by wanbetaling met gevangenisstraf vir 'n tydperk van hoogstens ses maande.

Van kant making van honde

9. Enige hond mag onverwyld van kant gemaak word—

(a) deur of op bevel van die eienaar, huurder of bewoner van 'n plaas, 'n gedeelte van 'n plaas of perseel indien aangetref terwyl dit daarop oortree;

(b) deur, of op die bevel van enige gemagtigde beampte indien dit losloop en skynbaar sonder eienaar is of nie opgeëis word nie; en

(c) deur, of op die bevel van enige gemagtigde beampte indien dit losloop en die eienaar of persoon wat daaroor toesig het, weier of in gebreke bly om dit te registreer en die lisensiegeld ten opsigte van sodanige hond verskuldig, te betaal.

Algemene oortredings

10. Enige persoon wat—

(a) enige bepaling van hierdie Wet oortree; of

(b) versuim of nalaat om 'n hond te registreer binne die tydperk voorgeskryf by artikel 3 (1); of

(c) versuim of nalaat om, wanneer hy deur 'n gemagtigde beampte daartoe versoek word, 'n registrasiesertifikaat of hond te toon; of

the owner of a dog has his permanent home or, if he has no permanent home, where the owner of a dog finds himself on the first day of January of the year concerned.

Right of entry of authorised officer and penalties for obstructing him

8. (1) An authorised officer may, for any purpose connected with the carrying out of the provisions of this Act, at all reasonable times and without previous notice, enter upon any land or enter any premises, to make such examination and enquiry as he may deem necessary and may take with him an assistant on to such land or premises.

(2) Any authorised officer may, while he is on such land or premises or at any other time or place, question, either alone or in the presence of any other person, any person who, in the opinion of such authorised officer, may be able to furnish any information required by him for any purpose.

(3) Any person who occupies land or premises and any employee of any such person shall, upon the request of an authorised officer, assist such authorised officer to enter such land or premises in order to exercise the powers vested in him by subsections (1) and (2).

(4) Any person who—

(a) makes a false statement to an authorised officer knowing such statement to be false; or

(b) refuses or fails to answer any question which an authorised officer has put to him in the execution of his powers or duties under this Act; or

(c) refuses or fails to comply with a lawful request by an authorised officer in the execution of his powers and duties; or

(d) resists or hinders or obstructs any authorised officer in the execution of his powers and duties; or

(e) falsely pretends to be an authorised officer; or

(f) contravenes or fails to comply with the provisions of subsection (3);

shall be guilty of an offence and be liable on conviction to a fine not exceeding R100 or in default of payment, to imprisonment for a period not exceeding six months.

Destruction of dogs

9. Any dog may forthwith be destroyed—

(a) by, or on the order of the owner, lessee or occupier of a farm, portion of a farm or allotment if found trespassing thereon;

(b) by, or on the order of any authorised officer if it is at large and appears to be ownerless or unclaimed; and

(c) by, or on the order of any authorised officer if it is found at large and the owner or person having custody thereof, refuses or fails to register it and pay the levy due in respect of such dog.

General offences

10. Any person who—

(a) contravenes any provision of this Act; or

(b) fails or neglects to register a dog within the period prescribed by section 3 (1); or

(c) fails or neglects to produce a registration certificate or a dog when requested thereto by an authorised officer; or

(d) die eienaar is van, of in besit gevind word van, of beheer het oor, 'n hond wat nie geregistreer is nie; of

(e) 'n dokument vervaardig om te lyk na 'n registrasiesertifikaat met die bedoeling dat sodanige dokument gebruik sal word as 'n registrasiesertifikaat ingevolge hierdie Wet; of

(f) 'n nagemaakte registrasiesertifikaat gebruik of uitgee wetende dat dit vals is; of

(g) in besit gevind word van 'n registrasiesertifikaat wat ingevolge hierdie Wet aan 'n ander persoon uitgereik is ten opsigte van 'n ander hond en nie bevredigende rekenskap vir sodanige besit kan gee nie;

is skuldig aan 'n misdryf en by skuldigbevinding—

(i) in die geval van 'n oortreding van paragrawe (a), (b), (c) of (d) tot 'n boete van hoogstens R15 of, by wanbetaling, tot gevangenisstraf van hoogstens een maand; en

(ii) in alle ander gevalle, tot 'n boete van hoogstens R100 of, by wanbetaling, tot gevangenisstraf van ses maande.

Eienaar van oortredende hond skuldig aan misdryf

11. Die eienaar van 'n hond wat op enige grond oortree, is, indien sodanige hond skade veroorsaak terwyl dit aldus oortree, skuldig aan 'n misdryf en by skuldigbevinding strafbaar met 'n boete van hoogstens R50 of, by wanbetaling, met gevangenisstraf van hoogstens drie maande en die hof mag beveel dat sodanige hond van kant gemaak word.

Vermoedens

12. (1) Wanneer daar kragtens hierdie Wet geregtelike stappe teen 'n persoon geneem word op grond daarvan dat hy 'n hond ouer as ses maande aanhou sonder dat dit geregistreer is word daar vermoed, totdat die teendeel bewys word, dat sodanige hond ses maande oud of ouer is.

(2) By enige vervolging ingevolge artikel 11 word vermoed, totdat die teendeel bewys word, dat die persoon in wie se bewaring en onder wie se beheer die hond wat oortree het inderdaad was, ten tye van sodanige oortreding, die eienaar van sodanige hond is.

Verhaling by wyse van siviele aksie

13. Ondanks enige ander straf wat ingevolge hierdie Wet 'n persoon opgelê is, kan heffings, wat gevind word deur sodanige persoon by hierdie Wet verskuldig te wees, verhaal word van sodanige persoon af of 'n siviele vonnis ten opsigte daarvan ten gunste van die KaNgwane-Regering gevel is en die reëls met betrekking tot die beslaglegging van eiendom, soos voorgeskryf deur die Wet op Landdroshowe, 1944 (Wet 32 van 1944), en die regulasies daarkragtens uitgevaardig, is van toepassing.

Regulasies

14. (1) Die Raadslid kan regulasies maak—

(a) waarin die vorms wat gebruik moet word vir die doeleindes van hierdie Wet, voorgeskryf word en ook die vorm van die registrasiesertifikaat wat daarkragtens uitgereik moet word;

(b) waarin die vergoeding wat aan gemagtigde beamptes bedoel in artikel 1 betaal moet word, voorgeskryf word waar sodanige beamptes nie beamptes van die KaNgwane-Regering of die Staatsdiens van die Republiek van Suid-Afrika is nie;

(d) is the owner o., or is found in possession of, or has control over a dog which is not registered; or

(e) makes a document to resemble a registration certificate with the intent that such document shall be used as a registration certificate issued under this Act; or

(f) uses or utters a false registration certificate knowing it to be false; or

(g) is found in possession of a registration certificate issued to another person in respect of another dog, and who cannot give a satisfactory account for such possession;

shall be guilty of an offence and liable on conviction—

(i) in the case of a contravention of paragraphs (a), (b), (c) or (d) to a fine not exceeding R15 or, in default of payment, to imprisonment for a period not exceeding one month; and

(ii) in all other cases, to a fine not exceeding R100 or, in default of payment, to imprisonment for a period not exceeding six months.

Owner of trespassing dog guilty of an offence

11. The owner of a dog which trespasses on any land shall, if such dog causes damage whilst thus trespassing, be guilty of an offence and liable on conviction to a fine not exceeding R50 and, in default of payment, to imprisonment not exceeding three months, and the court may order the destruction of such dog.

Presumptions

12. (1) In any proceedings instituted in terms of this Act against any person on the ground that he is keeping a dog which is older than six months without it having been registered, it shall be presumed that such dog is six months old or older unless the contrary is proved.

(2) In any prosecution under section 11 it shall be presumed that the person in whose custody and under whose control the dog which trespassed actually was at the time of such trespass, is the owner of such dog unless the contrary is proved.

Recovery by civil process

13. Notwithstanding any other penalty in terms of this Act having been imposed on a person, levies found to be due by such person under this Act may be recovered from such person as though a civil judgment was passed in respect thereof in favour of the KaNgwane government and the rules in regard to the attachment of property, as prescribed in the Magistrates' Courts Act, 1944 (Act 32 of 1944), and regulations thereunder, shall be applicable.

Regulations

14. (1) The Councillor may make regulations—

(a) prescribing the forms to be used for the purpose of this Act as well as the form of the registration certificate to be issued thereunder;

(b) prescribing the remuneration to be paid to authorised officers referred to in section 1 where such persons are not officers of the KaNgwane Government Service or the Public Service of the Republic of South Africa; or

UNIVERSITY OF PRETORIA
Together in Excellence

(c) in die algemeen, om voorsiening te maak vir aangeleenthede wat, na sy mening, nodig en dienstig is om voor te skryf ten einde uitvoering te gee aan die oogmerke en doelstellings van hierdie Wet.

(2) Die regulasies kan voorsiening maak vir strawwe vir oortreding daarvan of versuim om daaraan te voldoen: Met dien verstande dat sodanige strawwe nie 'n boete van R50 of by wanbetaling gevangenisstraf vir 'n tydperk van 90 dae te bowe mag gaan nie.

Herroeping van wette

15. Die Ordonnansie op die Lisensiëring en Kontrole van Honde, 1933 (Transvaal Ordonnansie 18 van 1933), word hierby herroep.

Kort titel en inwerkingtreding

16. Hierdie Wet heet die KaNgwane-wet op die Lisensiëring en Beheer van Honde, 1980, en tree in werking op 'n datum wat die Raadslid by kennisgewing in die *Staatskoerant* bepaal.

(R223/4/2/7)

No. 1776 29 Augustus 1980

KANGWANE-WET OP ONTWIKKELINGSBELASTING, 1980 (WET 4 VAN 1980)

Hierby word bekendgemaak dat die Staatspresident sy goedkeuring geheg het aan die volgende Wet wat deur die KaNgwane- Wetgewende Vergadering aangeneem is en wat hierby vir algemene inligting gepubliseer word:

GEBIED VAN DIE KANGWANE- WETGEWENDE VERGADERING

WET

Om 'n belasting op burgers van KaNgwane te hef en om die KaNgwane-wet op Ontwikkelingsbelasting, 1979 te herroep.

Daar word deur die KaNgwane- Wetgewende Vergadering verorden:

Woordomskrywing

1. In hierdie Wet, tensy uit die samehang anders blyk, beteken—

"belasting" die KaNgwane Ontwikkelingsbelasting gehef by artikel 2;

"belastingjaar" 'n tydperk wat op die eerste dag van Januarie van 'n jaar begin en op die laaste dag van Desember van dieselfde jaar eindig;

"belastingpligtige" 'n manlike burger wat die ouderdom van 18 jaar bereik het;

"burger" 'n persoon wat ingevolge die bepalings van die Wet op Burgerskap van Swart State, 1970 (Wet 26 van 1970) 'n burger van KaNgwane is;

"Direkteur" die Direkteur van Owerheidsake en Finansies;

"Inkomstefonds" die Inkomstefonds ingestel by artikel 6 van die Grondwet van die Swart State, 1971 (Wet 21 van 1971);

"KaNgwane" die gebied waarvoor die KaNgwane-Wetgewende Vergadering ingestel is en soos van tyd tot tyd gewysig;

"magistraat"—

(a) ten opsigte van 'n distrik binne KaNgwane, 'n magistraat, addisionele magistraat en assistentmagistraat aangestel kragtens artikel 8 van die Wet op Landdroshowe, 1944 (Wet 32 van 1944);

(c) generally providing for any matters which, in his opinion, is necessary or expedient to prescribe in order to give effect to the aims and objects of this Act.

(2) The regulations may provide for penalties for contravention thereof or failure to comply therewith: Provided that such penalties may not exceed a fine of R50 or, in default of payment, imprisonment for a period not exceeding 90 days.

Repeal of laws

15. The Licencing and Control of Dogs Ordinance, 1933 (Transvaal Ordinance 18 of 1933), is hereby repealed.

Short title and commencement

16. This Act shall be called the KaNgwane Licensing and Control of Dogs Act, 1980, and shall come into operation on a date to be determined by the Councillor by notice in the *Gazette*.

(R223/4/2/7)

No. 1776 29 August 1980

KANGWANE DEVELOPMENT TAX ACT, 1980 (ACT 4 OF 1980)

It is hereby notified that the State President has approved of the following Act which was passed by the KaNgwane Legislative Assembly and which is hereby published for general information:

AREA OF THE KANGWANE LEGISLATIVE ASSEMBLY

ACT

To levy a tax on citizens of KaNgwane and to repeal the KaNgwane Development Tax Act, 1979.

Be it enacted by the KaNgwane Legislative Assembly:

Definitions

1. In this Act, unless the context otherwise indicates—

"citizen" means any person who is a citizen of KaNgwane in terms of the provisions of the Black States Citizenship Act, 1970 (Act 26 of 1970);

"Councillor" means the Executive Councillor responsible for the department of Authority Affairs and Finance;

"Director" means the Director of Authority Affairs and Finance;

"KaNgwane" means the area for which the KaNgwane Legislative Assembly has been established as amended from time to time;

"Magistrate" means—

(a) in respect of any district in KaNgwane, a magistrate, additional magistrate and assistant magistrate appointed in terms of section 8 of the Magistrates' Courts Act, 1944 (Act 32 of 1944);

(b) in respect of a district outside KaNgwane, a Commissioner, Additional Commissioner and Assistant Commissioner appointed in terms of section 2 (2) of the Black Administration Act, 1927 (Act 38 of 1927) and where there is no such Commissioner, the magistrate, additional magistrate, and assistant magistrate;

"receiver" means any magistrate and any person appointed under section 11 (1) (a) to collect tax;

University of Fort Hare Together in Excellence

(b) ten opsigte van 'n distrik buite KaNgwane, 'n Kommissaris, Addisionele Kommissaris en Assistent-Kommissaris is aangestel kragtens artikel 2 (2) van die Swart Administrasie Wet, 1927 (Wet 38 van 1927) en waar daar geen sodanige Kommissaris is nie, die magistraat, addisionele magistraat en assistent-magistraat;

"ontvanger" 'n magistraat en enige persoon wat kragtens artikel 11 (1) (a) aangestel is om belasting in te vorder;

"Raadslid" die Uitvoerenderaadslid verantwoordelik vir die departement van Owerheidsake en Finansies.

Heffing van belasting

2. Daar word ten bate van die Inkomstefonds en ooreenkomstig die bepalings van hierdie Wet 'n belasting, bekend as die KaNgwane Ontwikkelingsbelasting, ten bedrae van R5 ten opsigte van elke belastingjaar deur elke belastingpligtige betaal.

Betaling van belasting

3. Behoudens die bepalings van hierdie Wet is die belasting by die kantoor van 'n ontvanger betaalbaar op of voor die eerste dag van Julie van die betrokke belastingjaar.

Uitstel vir betaling van belasting

4. 'n Ontvanger kan na goeddunke aan 'n belastingpligtige by wyse van 'n uitstelsertifikaat en in die mate wat in sodanige uitstelsertifikaat vermeld word, uitstel verleen vir die betaling van belasting wat deur sodanige belastingpligtige ingevolge hierdie Wet verskuldig en betaalbaar is.

Vrystelling van belasting

5. (1) Behoudens die bepalings van subartikel (4), word 'n belastingpligtige vrygestel van die betaling van belasting in die mate vermeld in 'n vrystellingsertifikaat wat kragtens hierdie artikel aan hom uitgereik is.

(2) 'n Ontvanger reik aan 'n belastingpligtige wat hom oortuig dat hy die ouderdom van 65 jaar bereik het, 'n sertifikaat uit wat sodanige belastingpligtige permanent vrystel van die betaling van belasting vanaf 'n datum in die sertifikaat vermeld.

(3) 'n Ontvanger kan aan 'n belastingpligtige 'n sertifikaat uitreik wat sodanige belastingpligtige vrystel van die betaling van belasting in die mate in die sertifikaat vermeld indien sodanige belastingpligtige hom oortuig—

(a) dat hy behoeftig is en weens ouderdom, chroniese siekte of enige ander oorsaak buite sy beheer, verhinder word om genoeg te verdien om hom in staat te stel om sodanige belasting te betaal; of

(b) dat vanweë sy gereelde bywoning van 'n opvoedkundige inrigting wat by of kragtens enige wet ingestel of kragtens 'n wet na behore geregistreer of goedgekeur is, hy verhinder is om genoeg te verdien om hom in staat te stel om sodanige belasting te betaal.

(4) 'n Belastingpligtige wat ingevolge die bepalings van die Wet op Swart Belasting, 1969 (Wet 92 van 1969) vrygestel is van die betaling van belastings deur hom betaalbaar ingevolge hierdie Wet in die mate vermeld in die vrystellingsertifikaat wat kragtens artikel 13 van bedoelde Wet op Swart Belasting, 1969 aan hom uitgereik is.

Intrekking van sertifikate

6. 'n Sertifikaat wat ingevolge artikel 4 of 5 uitgereik is, kan te eniger tyd deur 'n ontvanger ingetrek word indien hy oortuig is—

(a) dat dit bedrieglikerwys verkry is; of

"Revenue Fund" means the Revenue Fund established by section 6 of the Black States Constitution Act, 1971 (Act 21 of 1971);

"tax" means the KaNgwane Development Tax levied by section 2;

"taxpayer" means any male citizen who has attained the age 18 years;

"tax year" means a period commencing on the first day of January of any year and ending on the last day of December of the same year.

Levy of tax

2. There shall be paid for the benefit of the Revenue Fund and in accordance with the provisions of this Act a tax, known as the KaNgwane Development Tax, to the amount of R5 in respect of every tax year by every taxpayer.

Payment of tax

3. Subject to the provisions of this Act, the tax is payable at the office of any receiver on or before the first day of July of the tax year concerned.

Extension of time for payment of tax

4. A receiver may in his discretion grant to any taxpayer by way of certificate of extension and to the extent mentioned in such certificate of extension, an extension of time for the payment of tax due and payable by such taxpayer in terms of this Act.

Exemption from tax

5. (1) Subject to the provisions of subsection (4), any taxpayer shall be exempted from payment of tax to the extent mentioned in a certificate of exemption issued to him under this section.

(2) Any receiver shall issue to any taxpayer who satisfies him that he has attained the age of 65 years, a certificate exempting such taxpayer permanently from payment of tax with effect from a date mentioned in the certificate.

(3) Any receiver may issue to any taxpayer a certificate exempting such taxpayer from payment of tax to the extent mentioned in the certificate if such taxpayer satisfies him—

(a) that he is indigent and is prevented by reason of age, chronic disease or any other cause beyond his control from earning sufficient to enable him to pay such tax; or

(b) that, in consequence of his regular attendance at an educational institution established by or under any law or duly registered or approved under any law, he has been precluded from earning sufficient to enable him to pay such tax.

(4) Any taxpayer who has been exempted in terms of the provisions of the Black Taxation Act, 1969 (Act 92 of 1969), from the payment of taxes payable by him in terms of that Act, is exempted from the payment of tax payable by him in terms of this Act to the extent mentioned in the certificate of exemption issued to him under section 13 of the said Black Taxation Act, 1969.

Cancellation of certificates

6. Any certificate issued under section 4 or 5 may at any time be cancelled by any receiver if he is satisfied—

(a) that it was obtained fraudulently; or

(b) dat die belastingpligtige aan wie dit uitgereik is, nie meer op uitstel vir die betaling van belasting ingevolge artikel 4 of vrystelling van belasting ingevolge artikel 5, na gelang van die geval, geregtig is nie.

Vertoning van kwitansies en sertifikate

7. (1) 'n Ontvanger of 'n persoon of klas van persone skriftelik deur hom daartoe gemagtig of enige kaptein of hoofman aangestel of erken ingevolge die bepalings van die Swart Administrasie Wet 1927 (Wet 38 van 1927), kan te eniger tyd 'n burger wat vermoed word 'n belastingpligtige ingevolge hierdie Wet te wees of te gewees het, versoek om inligting met betrekking tot sy identiteit of belastingpligtigheid te verstrek of om 'n kwitansie ter stawing van die betaling van belasting of 'n uitstelsertifikaat bedoel in artikel 4 of 'n vrystellingsertifikaat bedoel in artikel 5 te toon en kan sodanige kwitansie of sertifikaat ondersoek: Met dien verstande dat geen belastingpligtige wat 'n kwitansie of 'n sertifikaat wat kragtens hierdie Wet aan hom uitgereik is ten opsigte van belasting vir enige jaar toon, verplig is om enige sodanige kwitansie of sertifikaat ten opsigte van sodanige belasting vir 'n voorafgaande jaar te toon nie.

(2) 'n Persoon wat 'n versoek kragtens subartikel (1) tot 'n burger rig—

(a) besorg na insae en ondersoek enige dokument wat deur sodanige burger getoon is, aan hom terug; en

(b) kan sodanige burger sonder 'n lasbrief in hegtenis neem indien laasgenoemde versuim om aan sodanige versoek te voldoen of deur sodanige persoon vermoed word 'n misdryf ingevolge hierdie Wet te gepleeg het.

(3) Daar word met 'n belastingpligtige wat kragtens subartikel (2) in hegtenis geneem is, gehandel ooreenkomstig die bepalings van artikel 50 van die Strafproseswet, 1977 (Wet 51 van 1977), of hy word vrygelaat—

(a) indien 'n vrystelling- of uitstelsertifikaat ten opsigte van die belasting wat blyk agterstallig te wees, aan hom uitgereik word;

(b) indien hy tot bevrediging van die persoon wat hom in hegtenis geneem het, sekerheid stel vir die betaling van die belasting wat blyk agterstallig te wees;

(c) indien die agterstallige belasting ten volle betaal word; of

(d) indien hy na sy inhegtenisneming aan die persoon wat hom in hegtenis geneem het, dokumente toon wat voor sy inhegtenisneming kragtens hierdie Wet aan hom uitgereik is waaruit dit blyk dat die belasting ten volle betaal is of dat uitstel of vrystelling van die betaling van belasting aan hom verleen is.

Verhaal van agterstallige belasting

8. (1) 'n Bedrag van belasting wat ingevolge hierdie Wet agterstallig is, is 'n skuld aan die Regering van KaNgwane en kan op die wyse uiteengesit in subartikel (2) verhaal word.

(2) Wanneer 'n bedrag van belasting wat ingevolge hierdie Wet deur 'n belastingpligtige betaalbaar is, agterstallig is, kan die magistraat van die distrik waarin sodanige belastingpligtige woon, met die doel om sodanige bedrag te verhaal, 'n lasbrief vir eksekusie teen die roerende goed van sodanige belastingpligtige uitreik en daarna word sodanige lasbrief deur 'n persoon deur die magistraat aangestel ten uitvoer gelê asof dit

(b) that the taxpayer to whom it was issued is no longer entitled to extension of time for the payment of tax in terms of section 4 or exemption from tax in terms of section 5, as the case may be.

Production of receipts and certificates

7. (1) Any receiver or any person or class of persons authorised thereto in writing by him or any chief or headman appointed or recognised in terms of the provisions of the Black Administration Act, 1927 (Act 38 of 1927), may at any time request any citizen who is suspected to be or to have been a taxpayer in terms of this Act to furnish information as to his identity or liability for tax or to produce a receipt in proof of payment of tax or a certificate of extension referred to in section 4 or a certificate of exemption referred to in section 5 and may examine such receipt or certificate: Provided that no taxpayer who produces any receipt or certificate issued to him under this Act in respect of tax for any year, shall be required to produce any such receipt or certificate in respect of tax for any preceeding year.

(2) Any person making a request to any citizen under subsection (1)—

(a) shall after inspection and examination return any document produced by such citizen to him; and

(b) may arrest such citizen without a warrant if the latter fails to comply with such request or is suspected by such person of having committed an offence in terms of this Act.

(3) Any taxpayer arrested under subsection (2) shall be dealt with in accordance with the provisions of section 50 of the Criminal Procedure Act, 1977 (Act 51 of 1977), or shall be released—

(a) if a certificate of exemption or extension in respect of the tax which appears to be in arrear is issued to him;

(b) if he furnishes security to the satisfaction of the person who arrested him for payment of the tax which appears to be in arrear;

(c) if the arrear tax is paid in full; or

(d) if, after his arrest, he produces to the person who arrested him documents issued to him under this Act before his arrest from which it appears that the tax has been paid in full or that extension of time or exemption from payment of tax has been granted to him.

Recovery of arrear tax

8. (1) Any amount of tax which is in arrear in terms of this Act, shall be a debt due to the Government of KaNgwane and may be recovered in the manner set forth in subsection (2).

(2) Whenever any amount of tax which is payable by any taxpayer in terms of this Act is in arrear, the magistrate of the district in which such taxpayer resides may, for the purpose of recovering such amount, issue a warrant of execution against the movable property of such taxpayer, and thereafter such warrant shall be executed by a person appointed by such magistrate as if it were issued pursuant to a

Together in Excellence

ingevolge 'n vonnis van 'n magistraat uitgereik is, behalwe dat dit nie nodig is dat 'n afskrif van sodanige lasbrief aan sodanige belastingpligtige beteken word nie.

(3) Indien 'n belastingpligtige nie aan die persoon wat 'n lasbrief, uitgereik kragtens subartikel (2), ten uitvoer lê, die bedrag van die agterstallige belasting tesame met die koste ten opsigte van die tenuitvoerlegging, op aanvraag betaal nie, of nie aan sodanige persoon voldoende roerende goed uitwys vir die verhaal van sodanige bedrag en sodanige koste nie, kan sodanige persoon sodanige belastingpligtige sonder lasbrief in hegtenis neem, en daarna word daar met sodanige belastingpligtige ooreenkomstig die bepalings van artikel 7 (3) gehandel.

(4) Die gelde en koste voorgeskryf kragtens artikel 45 (1) (h) van die Wet op Swart Belasting, 1969 (Wet 92 van 1969), ten opsigte van die tenuitvoerlegging van 'n lasbrief kragtens daardie Wet uitgereik, is die gelde en koste betaalbaar ten opsigte van die tenuitvoerlegging van 'n lasbrief kragtens subartikel (2) uitgereik.

Toewysing van betalings

9. Indien 'n belastingpligtige 'n bedrag vir die betaling van belasting ten opsigte van enige besondere belastingjaar aanbied, en sodanige belastingpligtige enige bedrag ten opsigte van 'n vorige belastingjaar skuld, word die bedrag aldus aangebied, aangewend ter vereffening van die belasting wat die langste agterstallig is.

Terugbetalings

10. Indien die Direkteur oortuig is dat 'n bedrag wat deur 'n belastingpligtige ingevolge hierdie Wet betaal is, die bedrag van belasting wat ingevolge hierdie Wet verskuldig of agterstallig is, oorskry, betaal hy die balans aan sodanige belastingpligtige terug.

Administrasie

11. (1) Die Direkteur is verantwoordelik vir die invordering van belasting en kan—

(a) enige persoon of liggaam as ontvanger aanstel om belasting namens hom in te vorder: Met dien verstande dat 'n magistraat geag word so aangestel te wees;

(b) enige van sy bevoegdhede kragtens hierdie Wet delegeer aan enige beampte, hetsy toegewese of andersins, in die Regeringsdiens van KaNgwane of die regeringsdiens van enige ander Swart staat of aan enige beampte in die Staatsdiens van die Republiek;

(c) voorskrifte met betrekking tot die invordering van belasting aan ontvangers uitreik;

(d) die vorm van kwitansies en sertifikate wat kragtens die bepalings van hierdie Wet uitgereik word, voorskryf.

(2) Die Raadslid kan uit gelde wat die Wetgewende Vergadering vir die doel bewillig, aan 'n ontvanger wat nie 'n beampte, hetsy toegewese of andersins, in die Regeringsdiens van KaNgwane of in die regeringsdiens van enige ander Swart staat is nie of nie 'n beampte in die Staatsdiens van die Republiek is nie, vir dienste gelewer in verband met die invordering van belasting, die vergoeding of toelaes betaal wat die Raadslid bepaal.

Vermoedens

12. Indien by verrigtinge ingevolge hierdie Wet, die vraag ontstaan—

(a) of 'n persoon 'n belastingpligtige is aldan nie, word daar vermoed totdat die teendeel bewys word, dat sodanige persoon 'n belastingpligtige is;

judgment of a magistrate's court, except that it shall not be necessary to serve a copy of such warrant upon such taxpayer.

(3) If any taxpayer does not pay on demand to the person executing a warrant issued under subsection (2), the amount of the arrear tax, together with the costs in respect of the execution, or does not point out to such person sufficient movable property for the recovery of such amount and such costs, such person may arrest such taxpayer without warrant, and thereupon such taxpayer shall be dealt with in accordance with the provisions of section 7 (3).

(4) The fees and costs prescribed under section 45 (1) (h) of the Black Taxation Act, 1969 (Act 92 of 1969), in respect of the execution of a warrant issued under that Act, shall be the fees and costs payable in respect of the execution of a warrant issued under subsection (2).

Allocation of payments

9. If any taxpayer tenders any amount in payment of tax in respect of any particular tax year, and such taxpayer owes any amount of tax in respect of any previous tax year, the amount so tendered shall be applied to the discharge of the tax which is longest in arrear.

Refunds

10. If the Director is satisfied that any amount paid by any taxpayer in terms of this Act is in excess of the amount of tax due or in arrear in terms of this Act, he shall refund the balance to such taxpayer.

Administration

11. (1) The Director shall be responsible for the collection of tax and may—

(a) appoint any person or body as receiver to collect tax on his behalf: Provided that any magistrate shall be deemed to be so appointed;

(b) delegate any of his powers under this Act to any officer, whether seconded or not, in the Government Service of KaNgwane or in the government service of any other Black state or to any officer in the Public Service of the Republic;

(c) issue instructions to receivers in relation to the collection of tax;

(d) prescribe the form of receipts and certificates issued in terms of the provisions of this Act.

(2) The Councillor may, out of moneys voted by the Legislative Assembly for the purpose, pay to a receiver who is not an officer, whether seconded or not, in the Government Service of KaNgwane or in the government of any other Black state or not an officer in the Public Service of the Republic, for services rendered in connection with the collection of tax, such remuneration or allowances as the Councillor may determine.

Presumptions

12. If in any proceedings under this Act, the question arises—

(a) whether or not any person is a taxpayer, it shall be presumed, until the contrary is proved, that such person is a taxpayer;

CONT

IN LUMINE TUO VIDEBIMUS LUMEN
University of Fort Hare
Together in Excellence

(b) of die belasting deur 'n persoon betaalbaar is of agterstallig is, al dan nie, word daar vermoed totdat die teendeel bewys word, dat die belasting deur sodanige persoon betaalbaar is of dat dit agterstallig is, na gelang van die geval;

(c) met betrekking tot die ouderdom van 'n persoon, word daar vermoed totdat die teendeel bewys word, dat sy ouderdom dié is soos deur die voorsittende beampte by sodanige verrigtinge geskat is volgens sodanige persoon se voorkoms of volgens inligting wat beskikbaar is.

Misdrywe en strawwe

13. (1) 'n Persoon wat—

(a) 'n belastingpligtige is en wat versuim om die belasting wat ingevolge hierdie Wet deur hom betaalbaar is op of voor die laaste dag toegelaat vir die betaling van sodanige belasting te betaal;

(b) versuim om te voldoen aan 'n versoek wat kragtens artikel 7 (1) gerig is;

(c) valse inligting verstrek by voldoening aan 'n versoek wat kragtens artikel 7 (1) gerig is;

(d) versuim om 'n dokument aan 'n belastingpligtige terug te besorg soos by artikel 7 (2) (a) vereis;

(e) 'n belastingpligtige onwettiglik die besit van 'n kwitansie of sertifikaat wat kragtens hierdie Wet aan hom uitgereik is, ontneem;

(f) toelaat dat 'n kwitansie of sertifikaat wat kragtens hierdie Wet aan hom uitgereik is en in sy besit is, in die besit van 'n ander persoon kom met die bedoeling dat dit vir 'n bedrieglike oogmerk gebruik word;

(g) valslik voordoen of voorgee dat 'n kwitansie of sertifikaat wat kragtens hierdie Wet aan 'n ander persoon uitgereik is en in sy besit is, aan hom uitgereik is;

(h) tensy hy nie die bedoeling het om te bedrieg nie, 'n kwitansie of sertifikaat wat kragtens hierdie Wet uitgereik is, verander, skend, vernietig of beskadig; of

(i) 'n kwitansie of sertifikaat wat vir die doeleindes van hierdie Wet gebruik word, vervals of uitgee wetende dat dit vals is;

is aan 'n misdryf skuldig en by skuldigbevinding strafbaar met 'n boete van hoogstens R100 of met gevangenisstraf vir 'n tydperk van hoogstens drie maande.

(2) Indien 'n belastingpligtige aan 'n oortreding van subartikel (1) (a) skuldig bevind is weens wanbetaling van belasting betaalbaar deur hom ten opsigte van enige besondere belastingjaar, word sodanige belastingpligtige nie weer weens sodanige wanbetaling aangeklo nie: Met dien verstande dat die skuld van sodanige belastingpligtige aan die Regering van KaNgwane ten opsigte van sodanige belasting nie uitgewis word nie.

Toepassing van hierdie Wet buite KaNgwane

14. Hierdie Wet is van toepassing ook op burgers wat buite KaNgwane is of woon, mits hulle binne die Republiek is of woon.

Herroeping van wette

15. (1) Die KaNgwane-wet op Ontwikkelingsbelasting, 1979 (Wet 4 van 1979) word hierby herroep.

(2) Die bepalings van subartikel (1) word geag op 1 Januarie 1980 in werking te getree het.

(b) whether or not the tax is payable by any person or is in arrear, it shall be presumed, until the contrary is proved, that the tax is payable by such person or that it is in arrear, as the case may be;

(c) as to the age of any person, his age shall, until the contrary is proved, be presumed to be the age estimated by the officer presiding at such proceedings from such person's appearance or from any information which may be available.

Offences and penalties

13. (1) Any person who—

(a) is a taxpayer and who fails to pay the tax payable by him in terms of this Act on or before the last day permitted for the payment of such tax;

(b) fails to comply with a request made under section 7 (1);

(c) furnishes false information in complying with a request made under section 7 (1);

(d) fails to return to any taxpayer any document as required by section 7 (2) (a);

(e) unlawfully deprives any taxpayer of the possession of any receipt or certificate issued to him under this Act;

(f) permits any receipt or certificate issued to him under this Act, which is in his possession, to come into the possession of any person with intent that it be used for any fraudulent purpose;

(g) falsely pretends or gives out that any receipt or certificate issued to any other person under this Act, which is in his possession, has been issued to him;

(h) unless he has no intention to defraud, alters, defaces, destroys or damages any receipt or certificate issued under this Act; or

(i) forges or utters, knowing it to be forged, any receipt or certificate used for the purposes of this Act;

shall be guilty of an offence and on conviction liable to a fine not exceeding R100 or to imprisonment for a period not exceeding three months.

(2) If any taxpayer has been convicted of a contravention of subsection (1) (a) for non-payment of tax payable by him in respect of any particular tax year, such taxpayer shall not be charged again for such non-payment: Provided that the debt of such taxpayer to the Government of KaNgwane in respect of the said tax shall not be extinguished.

Application of this Act outside KaNgwane

14. This Act shall also apply to citizens who are or reside outside KaNgwane, provided they are or reside within the Republic.

Repeal of laws

15. (1) The KaNgwane Development Tax Act, 1979 (Act 4 of 1979), is hereby repealed.

(2) The provisions of subsection (1) shall be deemed to have come into operation on 1 January 1980.

Kort titel en inwerkingtreding

16. Hierdie Wet heet die KaNgwane-wet op Ontwikkelingsbelasting 1980, en tree in werking op 'n datum wat die Raadslid by kennisgewing in die *Staatskoerant* bepaal.

(R223/4/2/2)

No. 1777 29 Augustus 1980

KANGWANE-WET OP ARGIEWE, 1980
(WET 6 VAN 1980)

Hierby word bekendgemaak dat die Staatspresident sy goedkeuring geheg het aan die volgende Wet wat deur die KaNgwane Wetgewende Vergadering aangeneem is en wat hierby vir algemene inligting gepubliseer word:

GEBIED VAN DIE KANGWANE-WETGEWENDE VERGADERING

WET

Om voorsiening te maak vir die bewaring en versorging van en beheer oor argiewe in KaNgwane en vir aangeleenthede wat daarmee in verband staan

Daar word bepaal deur die KaNgwane-Wetgewende Vergadering, soos volg:

Woordomskrywing

1. In hierdie Wet, tensy uit die samehang anders blyk, beteken—

"aanwinste" alle dokumente of stukke wat ingevolge artikel 6 verkry is;

"argiefbeampte" die argiefbeampte in artikel 3 bedoel;

"argiefbewaarplek" 'n argiefbewaarplek in artikel 4 bedoel";

"argiewe" alle dokumente of stukke wat in die loop van die bestuur van sake in 'n kantoor ontvang of geskep is en waarmee daar nie, volgens die aard daarvan of ingevolge 'n ander wet, anders gehandel moet word as ooreenkomstig of ingevolge die bepalings van hierdie Wet nie, en sluit aanwinste in;

"Direkteur" die Direkteur van Onderwys en Kultuur;

"hierdie Wet" ook die regulasies;

"KaNgwane" die gebied waarvoor die KaNgwane-Wetgewende Vergadering ingestel is, soos van tyd tot tyd gewysig;

"kantoor" enige kantoor van die Regering of van 'n streeks- of stamowerheid ingestel kragtens die bepalings van die Wet op Swart Owerhede, 1951 (Wet 68 van 1951), in KaNgwane;

"publiek" enige persoon wat nie in sy amptelike hoedanigheid in die loop van die verrigting van sy werksaamhede in 'n kantoor insae het of in tydelike bewaring van argiewe is nie;

"Regering" die Regering van KaNgwane;

"regulasies" regulasies gemaak ingevolge hierdie Wet;

"Uitvoerenderaadslid" die Uitvoerenderaadslid belas met die administrasie van die Departement van Onderwys en Kultuur.

Uitvoerende Raadslid oefen beheer uit oor argiewe

2. Behoudens die bepalings van hierdie Wet oefen die Uitvoerenderaadslid beheer uit oor die bewaring en versorging van argiewe.

Short title and commencement

16. This Act shall be called the KaNgwane Development Tax Act, 1980, and will come into operation on a date to be fixed by the Councillor by notice in the *Gazette*.

(R223/4/2/2)

No. 1777 29 August 1980

KANGWANE ARCHIVES ACT, 1980
(ACT 6 OF 1980)

It is hereby notified that the State President has approved of the following Act which was passed by the KaNgwane Legislative Assembly and which is hereby published for general information:

AREA OF THE KANGWANE LEGISLATIVE ASSEMBLY

ACT

To provide for the custody, care and control of archives in KaNgwane and for matters incidental thereto

Be it enacted by the KaNgwane Legislative Assembly, as follows:

Definitions

1. In this Act, unless the context otherwise indicates—

"accessions" means any documents or records acquired in terms of section 6;

"archives" means any documents or records received or created in any office during the course of the conduct of the business in such office and which are, from their nature or in terms of any other law, not required to be dealt with otherwise than in accordance with or in terms of the provisions of this Act, and shall include accessions;

"archives depot" means an archives depot referred to in section 4;

"archives officer" means the archives officer referred to in section 3;

"Director" means the Director of Education and Culture;

"Executive Councillor" means the Executive Councillor charged with the administration of the Department of Education and Culture;

"Government" means the Government of KaNgwane;

"KaNgwane" means the area for which the KaNgwane Legislative Assembly has been established, as amended from time to time;

"office" means any office of the Government or of a regional authority or tribal authority established in terms of the Black Authorities Act, 1951 (Act 68 of 1951) in KaNgwane;

"public" any person who does not, in his official capacity, have access to archives or accessions in the course of the execution of his functions in an office or who is not in temporary custody or archives or accessions;

"regulations" means regulations made under this Act;

"this Act" includes the regulations.

Executive Councillor exercises control over archives and accessions

2. Subject to the provisions of this Act the Executive Councillor shall exercise control over the custody and care of archives.

University of Pretoria
Together in Excellence

Aanstelling, bevoegdhede en pligte van argiefbeampte

3. (1) Die Uitvoerenderaadslid stel, behoudens die bepalings van die KaNgwane-wet op die Regeringsdiens, 1979 (Wet 3 van 1979), 'n argiefbeampte aan wat sy werksaamhede kragtens hierdie Wet en ingevolge die voorskrifte van die Uitvoerenderaadslid verrig.

(2) Behoudens die bepalings van hierdie Wet, enige ander wetsbepalings en voorwaardes waarop enige aanwinste verkry is—

(a) is die argiefbeampte belas met die bewaring en versorging van en die beheer oor argiewe;

(b) kan die argiefbeampte enige argiewe ondersoek of laat ondersoek vir sover sodanige ondersoek nodig is vir die verrigting van sy werksaamhede kragtens hierdie Wet, en kan hy, met die goedkeuring van die Direkteur, magtiging verleen vir die vernietiging van enige argiewe waarvan die verdere of permanente bewaring, volgens sy oordeel, onnodig of onvanpas is;

(c) kan die argiefbeampte iemand wat belas is met die bewaring of versorging van of die beheer het oor enige argiewe, van advies bedien met betrekking tot die bewaring, versorging en liassering daarvan;

(d) kan die argiefbeampte, met die goedkeuring van die Direkteur, enige argiewe of oorspronklike bronne of enige tesis of ander werk wat gebaseer is op 'n studie van enige argiewe of sodanige bronne publiseer of laat publiseer of die publikasie daarvan magtig;

(e) kan die argiefbeampte, met die goedkeuring van die Direkteur, verleen na raadpleging met die Uitvoerenderaadslid, oor enige argiewe in 'n argiefbewaarplek wat oortollig is of nie vir 'n argiefbewaarplek geskik is nie, deur middel van geskenk, ruil of andersins beskik;

(f) kan die argiefbeampte op aansoek van iemand en teen betaling van die gelde wat by regulasie voorgeskryf is, vir so iemand navorsing in enige argiewe doen en afskrifte daarvan of uittreksels daaruit maak;

(g) kan die argiefbeampte, vir die behoorlike behoud daarvan, enige argiewe laat herstel of inbind of andersins daarmee handel; en

(h) verrig die argiefbeampte die ander pligte in verband met argiewe wat die Uitvoerenderaadslid gelas.

Argiefbewaarplekke

4. Daar is—

(a) 'n argiefbewaarplek vir die bewaring van argiewe; en

(b) die bykomende argiefbewaarplekke vir die bewaring van argiewe en die tydelike argiefbewaarplekke vir die tydelike bewaring van argiewe wat die Uitvoerenderaadslid van tyd tot tyd bepaal.

Oorplasing van argiewe na argiefbewaarplek

5. Alle argiewe in 'n kantoor word na die argiefbewaarplek wat die argiefbeampte bepaal, oorgeplaas wanneer hulle 30 jaar oud of ouer is of, indien die argiewe minder as 30 jaar oud is, wanneer die argiefbeampte so gelas.

Appointment, powers and duties of archives officer

3. (1) The Executive Councillor shall, subject to the provisions of the KaNgwane Public Service Act, 1979 (Act 3 of 1979) appoint an archives officer who shall perform his functions under this Act and in accordance with the directions of the Executive Councillor.

(2) Subject to the provisions of this Act, any other law and conditions on which accessions are acquired, the archives officer—

(a) is charged with the custody, care and control of archives;

(b) may inspect or cause to be inspected any archives in so far as such inspection may be necessary for the performance of his functions under this Act, and may, with the approval of the Director, authorise the destruction of any archives of which the further or permanent custody is, in his opinion, unnecessary or inappropriate;

(c) may advise any person charged with the custody care or control of any archives, in regard to the custody, care and filing thereof;

(d) may, with the approval of the Director, publish or cause to be published or authorise the publication of any archives or original sources or any thesis or other work based on a study of any archives or such sources;

(e) may, with the approval of the Director, granted after consultation with the Executive Councillor by donation, exchange or otherwise dispose of any archives in an archives depot which are redundant or unsuitable for any archives depot, to any library, museum or other body;

(f) may, on the application by any person and on payment of the fees prescribed by regulation, do research into any archives and make copies thereof or extracts therefrom for such person;

(g) may cause any archives to be repaired or bound or otherwise dealt with as he may deem necessary for the proper preservation thereof; and

(h) shall perform such other duties in connection with archives as the Executive Councillor may direct.

Archives depots

4. There shall be—

(a) an archives depot for the custody of archives; and

(b) such additional archives depots for the custody of archives and such temporary archives depots for the temporary custody of archives as the Executive Councillor may from time to time determine.

Transfer of archives to depot

5. All archives in an office shall be transferred to the archives depot determined by the archives officer when they are 30 years old or older or, if the archives are less than 30 years old, when the archives officer so directs.

University of Fort Hare
Together in Excellence

Verkryging van dokumente en stukke vir argiefbewaarplekke

6. (1) Die argiefbeampte kan met die voorafverkreë goedkeuring van die Direkteur, dokumente of stukke wat geskiedkundige waarde het of mag verkry, namens die Regering, deur middel van aankoop of as 'n skenking of in bruikleen, hetsy tydelik of permanent, verkry op die voorwaardes, indien enige, waarop ooreengekom word.

(2) Onderworpe aan enige voorwaardes wat op die verstryking van die dokumente of stukke bedoel in subartikel (1) van toepassing mag wees, word sodanige dokumente of stukke in 'n argiefbewaarplek geplaas.

(3) Enigiemand wat in verband met die voortbrenging van enige skriftelike stuk van enige argiewe gebruik gemaak het, voorsien op versoek die argiefbeampte gratis van 'n afskrif daarvan, en enige afskrif aldus voorsien, word in die argiefbewaarplek geplaas.

Tydelike oorplasing van argiewe van een argiefbewaarplek na 'n ander

7. Die argiefbeampte kan enige argiewe tydelik van die argiefbewaarplek waarin dit bewaar word na 'n ander argiefbewaarplek in artikel 4 (b) bedoel, oorplaas.

Toegang tot argiewe

8. (1) Behoudens die bepalings van hierdie Wet en enige ander wet en onderworpe aan die voorwaardes, indien enige, waarop enige aanwinste verkry is, het niemand toegang to argiewe nie: Met dien verstande dat die Uitvoerenderaadslid kan bepaal dat enige of bepaalde argiewe op grond van ouderdom of klassifikasie van hierdie bepaling vrygestel kan word en dat dié publiek toegang tot sodanige argiewe het.

(2) Die Uitvoerenderaadslid kan, met betrekking tot bepaalde argiewe wat deel vorm van argiewe wat ingevolge subartikel (1) vrygestel is—

(a) op grond van openbare beleid gelas dat toegang tot sodanige bepaalde argiewe weerhou word; of

(b) op grond van die brose toestand daarvan toegang tot sodanige bepaalde argiewe weier tot tyd en wyl dit geklassifiseer, herstel of andersins behandel is.

(3) Ondanks die bepalings van subartikels (1) en (2), kan die Uitvoerenderaadslid, op aansoek deur enige persoon, na goeddunke en onderworpe aan die voorwaardes wat hy oplê, so 'n persoon magtig om toegang te verkry tot bepaalde argiewe in 'n argiefbewaarplek.

(4) Die Uitvoerenderaadslid kan 'n magtiging aldus verleen te eniger tyd intrek.

(5) Behoudens die bepalings van enige ander wet, het niemand toegang tot argiewe in 'n kantoor nie: Met dien verstande dat die argiefbeampte na goeddunke en op die voorwaardes wat hy bepaal, maar onderworpe aan die voorskrifte van die Uitvoerenderaadslid en die bepalings van hierdie Wet en enige ander wet, enige persoon kan magtig om toegang tot daardie argiewe te verkry.

(6) Die Uitvoerenderaadslid kan 'n bevoegdheid aan hom verleen by subartikel (2) aan die Direkteur delegeer: Met dien verstande dat daar 'n reg van appèl is na die Uitvoerenderaadslid teen 'n beslissing van die Direkteur kragtens sy gedelegeerde bevoegdhede en die Uitvoerenderaadslid se beslissing in so 'n appèl is afdoende.

Acquisition of documents and records for archives depots

6. (1) The archives officer may, with the prior approval of the Director, acquire on behalf of the Government by purchase or as a donation or on loan, whether temporarily or permanently, on the conditions, if any, as may be agreed upon, any documents or records which have or may acquire any historical value.

(2) Subject to any conditions which may be applicable to the acquisition of the documents and records referred to in subsection (1) such documents or records shall be deposited in an archives depot.

(3) Any person who is connection with the production of any written matter has made use of any archives shall, at the request of the archives officer, furnish him, free of charge, with a copy thereof and any copy so furnished shall be placed in the archives depot.

Temporary transfer of archives from one depot to another

7. The archives officer may transfer any archives temporarily from the archives depot where they are kept to any other depot referred to in section 4 (b).

Access to archives

8. (1) Subject to the provision of this Act and any other law and the conditions, if any, under which any accessions were acquired, no person shall have access to any archives: Provided that the Executive Councillor may direct that any or specified archives shall, on account of their age or classification, be excempted from this provision and that the public shall have access to such archives.

(2) The Executive Councillor may, in respect of any specific archives which form part of any archives which have been released in terms of subsection (1)—

(a) on the ground of public policy direct that access to such specific archives be withheld; or

(b) on the ground of its fragile condition, refuse access to such specific archives pending the classification, repair or other treatment thereof.

(3) Notwithstanding the provisions of subsections (1) and (2), the Executive Councillor may, upon application by any person, in his discretion and subject to such conditions as he may impose, authorise that person to have access to any archives in an archives depot.

(4) The Executive Councillor may at any time withdraw any authority so granted.

(5) Subject to the provisions of any other law no person shall have access to any archives in an office: Provided that the archives officer may in his discretion and on such conditions as he may determine, but subject to the directions of the Executive Councillor and the provisions of this Act and any other law, authorise any person to have access to such archives.

(6) The Executive Councillor may delegate to the Director any power vested in him in terms of subsection (2): Provided that there shall be a right of appeal to the Executive Councillor against a decision of the Director in terms of his delegated powers and the Executive Councillor's decision in such an appeal shall be conclusive.

Regulasies

9. (1) Behoudens die bepalings van subartikel (2), kan die Uitvoerenderaadslid regulasies uitvaard g in verband met—

(a) die bewaring, versorging, mikroverfilming en liassering van argiewe;

(b) die ondersoek en vernietiging van argiewe deur die argiefbeampte ingevolge artikel 3;

(c) die oorplasing van argiewe van 'n kantoor na 'n argiefbewaarplek;

(d) die toelating van die publiek tot 'n argiefbewaarplek en tot kantore waarin argiewe gehou word, die toegang tot argiewe deur die publiek en die gebruik van toestelle vir die maak van afskrifte van of uittreksels uit enige argiewe;

(e) die wyse waarop argiewe gehanteer moet word deur persone wat daarvan gebruik maak;

(f) die tarief van gelde betaalbaar vir die verskaffing van afskrifte van of uittreksels uit enige argiewe of vir navorsing onderneem op versoek van iemand deur die argiefbeampte, en die wyse waarop betaling van enige sodanige gelde moet geskied; en

(g) enige ander aangeleentheid wat, na die mening van die Uitvoerenderaadslid nodig of dienstig is om te reël vir die behoorlike uitvoering van hierdie Wet.

(2) Die Uitvoerenderaadslid bepaal die tarief van gelde bedoel in subartikel (1) (f) in oorleg met die Hoofuitvoerenderaadslid.

Misdrywe en strawwe

10. (1) Iemand wat—

(a) sonder magtiging 'n argiefbewaarplek binnegaan;

(b) opsetlik enige argiewe of aanwinste beskadig;

(c) anders as ooreenkomstig of ingevolge die bepalings van hierdie Wet of 'n ander wet argiewe hanteer, verwyder of vernietig; of

(d) 'n voorwaarde van 'n magtiging verleen ingevolge artikel 8 (3) oortree of versuim om daaraan te voldoen;

is aan 'n misdryf skuldig en by skuldigbevinding strafbaar met 'n boete van hoogstens R200 of met gevangenisstraf vir 'n tydperk van hoogstens 12 maande.

(2) Die Direkteur kan vir 'n tydperk wat hy goedvind, weier om aan iemand wat aan 'n misdryf kragtens subartikel (1) skuldig bevind is, toegang tot argiewe wat ingevolge artikel 8 (1) vrygestel is, te verleen, onderworpe aan die reg tot appèl na die Uitvoerenderaadslid wie se beslissing oor so 'n appèl afdoende is.

Vrystelling van aanspreeklikheid ten opsigte van sekere handelinge en verjaring van aksies

11. (1) Niemand is siviel- of strafregtelik aanspreeklik nie vir 'n handeling of versuim deur hom in die uitvoering van sy pligte of wat hy te goeder trou meen sy pligte is kragtens hierdie Wet, mits dié handeling of versuim te goeder trou was en nie aan nalatigheid te wyte was nie, en ook is die Regering nie aanspreeklik vir enige sodanige handeling of versuim nie.

(2) Indien iemand in 'n regsgeding aanvoer dat enige sodanige handeling of versuim nie ter goeder trou was nie of dat dit te wyte was aan nalatigheid, rus die bewyslas dat dit die geval was, op hom.

Regulations

9. (1) Subject to the provisions of subsection (2) the Executive Councillor may make regulations in respect of—

(a) the custody, care, microfilming and filing of archives;

(b) the inspection and destruction by the archives officer of archives in terms of section 3;

(c) the transfer of archives from an office to an archives depot;

(d) the admission of the public to an archives depot and to offices in which archives are kept, the access to archives by the public, and the use of devices for the making of copies of or extracts from any archives;

(e) the manner in which archives shall be handled by persons making use of them;

(f) the tariff of fees payable for supplying copies of or extracts from any archives or for research undertaken at the request of any person by the archives officer, and the manner in which payment of any such fee shall be effected; and

(g) any other matter which in the opinion of the Executive Councillor, is necessary or expedient to regulate for the proper execution of this Act.

(2) The Executive Councillor shall determine the tariff of fees referred to in subsection (1) (f) in consultation with the Chief Executive Councillor.

10. (1) Any person who—

(a) enters an archives depot without authority;

(b) wilfully damages any archives or accessories;

(c) otherwise than in accordance with or in terms of the provisions of this Act or any other law handles removes or destroys any archives or accessions; or

(d) contravenes or fails to comply with any conditions of an authority granted in terms of section 8 (3);

shall be guilty of an offence and liable on conviction to a fine not exceeding R200 or to imprisonment for a period not exceeding 12 months.

(2) The Director may refuse to allow any person convicted of an offence under subsection (1) access to any archives which have been released in terms of section 8 (1) for such period as he deems fit, subject to a right of appeal to the Executive Councillor, whose decision on any such appeal shall be conclusive.

Exemption from liability in respect of certain acts and limitation of actions

11. (1) No person shall be civilly or criminally liable for any act or omission by him in the performance of his duties or what he in good faith believes to be his duties under this Act, provided such act or omission was bona fide and not due to negligence, not shall the Government be liable for any such act or omission.

(2) If in any legal proceedings any person alleges that any such act or omission was not bona fide or was due to negligence, the onus of proving that such was the case shall be on him.

University of Pretoria
Together in Excellence

(3) 'n Siviele geding teen die Regering of iemand ten opsigte van so 'n handeling of versuim word ingestel binne ses maande nadat die eisoorsaak ontstaan het.

Kort titel en inwerkingtreding

12. Hierdie Wet heet die KaNgwane-wet op Argiewe, 1980, en tree in werking op 'n datum wat die Uitvoerenderaadslid by kennisgewing in die *Staatskoerant* bepaal.

(R223/4/2/6)

(3) Any civil action against the Government or any person in respect of any such act or omission shall be commenced with within six months after the cause of action has arisen.

Short title and commencement

12. This Act shall be called the KaNgwane Archives Act, 1980 and shall come into operation on a date to be fixed by the Executive Councillor by notice in the *Gazette*.

(R223/4/2/6)

No. 1815 29 Augustus 1980

VORM VAN HERKENNINGSBEWYS.—WYSIGING VAN GOEWERMENTSKENNISGEWING 775 VAN 1980

Ek, Pieter Gerhardus Jacobus Koornhof, Minister van Samewerking en Ontwikkeling, wysig hierby, kragtens die bevoegdheid my verleen by artikel 2 (1) van die Swartes (Afskaffing van Passe en Koördinering van Dokumente) Wet, 1952 (Wet 67 van 1952), Goewermentskennisgewing 775 van 1980 ooreenkomstig Bylaes 1 en 2 hiervan.

P. G. J. KOORNHOF, Minister van Samewerking en Ontwikkeling.

No. 1815 29 August 1980

FORM OF IDENTITY DOCUMENT.—AMENDMENT OF GOVERNMENT NOTICE 775 OF 1980

I, Pieter Gerhardus Jacobus Koornhof, Minister of Co-operation and Development, hereby, by virtue of the powers vested in me by section 2 (1) of the Blacks (Abolition of Passes and Co-ordination of Documents) Act, 1952 (Act 67 of 1952), amend Government Notice 775 of 1980 in accordance with Schedules 1 and 2 hereto.

P. G. J. KOORNHOF, Minister of Co-operation and Development.

SCHEDULE/BYLAE 1

Substitute the following section for Section H of Schedule 1:
Vervang Afdeling H van Bylae 1 deur die volgende afdeling:

"SECTION/AFDELING H

Male/Manlik

Personal particulars
Persoonlike besonderhede

First names
Voorname.....

Surname
Van.....

Ethnic group
Etniese groep.....

Citizenship
Burgerskap.....

Date/Year of birth
Datum/Jaar van geboorte.....

Number
Nommer.....

Republic of South Africa
(Coat of Arms of R.S.A.)
(Wapen van R.S.A.)
Republiek van Suid-Afrika

Photograph
Foto"

SCHEDULE/BYLAE 2

Substitute the following section for Section G of Schedule 2:
Vervang Afdeling G van Bylae 2 deur die volgende afdeling:

"SECTION/AFDELING G

Female/Vroulik

Personal particulars
Persoonlike besonderhede

First names
Voorname.....

Surname
Van.....

Ethnic group
Etniese groep.....

Citizenship
Burgerskap.....

Date/Year of birth
Datum/Jaar van geboorte.....

Number
Nommer.....

Republic of South Africa
(Coat of Arms of R.S.A.)
(Wapen van R.S.A.)
Republiek van Suid-Afrika

Photograph
Foto"

No. 1778 29 Augustus 1980

HER-BEPALING VAN DIE GEBIED VAN DIE THEMBU-STAM

Dit het die Staatspresident behaag om kragtens die bevoegdheid hom verleen by artikel 5 (1) (a) van die Swart Administrasie Wet, 1927 (Wet 38 van 1927), die

No. 1778 29 August 1980

RE-DEFINITION OF THE AREA OF THE THEMBU TRIBE

The State President has been pleased, under and by virtue of the powers vested in him by section 5 (1) (a) of the Black Administration Act, 1927 (Act 38 of

University of Fort Hare
Together in Excellence

grense van die gebied van die Thembu-stam te herbepaal.

Dit is derhalwe nodig om die Bylae van Goewermentskennisgewing 1616, gedateer 2 Oktober 1970, deur die volgende Bylae te vervang:

"Bylae

Gebied van die Thembu-stam in die distrik Pinetown

Die volgende eiendomme van die Suid-Afrikaanse Ontwikkelingstrust:

Restant van die plaas Lange Fontein 5981 en die restant van die plaas Waterfall 978.".

(Lêer F53/1530/3)

1927), to redefine the boundaries of the Thembu Tribe.

It is accordingly necessary to substitute the following Schedule for the Schedule to Government Notice 1616, dated 2 October 1970:

"Schedule

Area of the Thembu Tribe in the District of Pinetown

The following South African Development Trust properties:

Remainder of the farm Lange Fontein 5981 and the remainder of the farm Waterfall 978.".

(File F53/1530/3)

No. 1779 29 Augustus 1980

KOMMISSARISHOF BARBERTON

Hierby word bekendgemaak dat die Direkteur-generaal van Samewerking en Ontwikkeling, behoorlik daartoe gemagtig kragtens artikel 10 (2) (b) van die Swart Administrasie Wet, 1927 (Wet 38 van 1927), Eerstehoek en Malelane aangewys het as plekke waar die Kommissarishof Barberton sittings kan hou.

No. 1779 29 August 1980

BARBERTON COMMISSIONER'S COURT

It is hereby notified that the Director-General of Co-operation and Development, duly authorised thereto in terms of section 10 (2) (b) of the Black Administration Act, 1927 (Act 38 of 1927), has indicated Eerstehoek and Malelane as places where the Barberton Commissioner's Court may hold sittings.

ALGEMENE KENNISGEWINGS

KENNISGEWING 593 VAN 1980

DEPARTEMENT VAN GEMEENSKAPSBOU

KENNISGEWING VAN ONTEIENING

Aan:

DIE PERSONE AANGEDUI IN DIE ONDERSTAANDE SKEDULE, HUL FIDEIKOMMISSÊRE ERFGENAME EN AAN ALLE BELANGHEBBENDE PARTYE

1. Die eiendom hierna beskryf, waarvan u na die wete van die Gemeenskapsontwikkelingsraad ingestel by artikel 2 van die Wet op Gemeenskapsontwikkeling 1966 (Wet 3 van 1966), die geregistreerde eienaar is, word deur genoemde Gemeenskapsontwikkelingsraad benodig ten einde die oogmerke waarvoor die Raad ingestel is, te bereik.

2. Aangesien die Minister van Gemeenskapsbou kragtens die bepalings van paragraaf (a) van subartikel (1) van artikel 38 van genoemde Wet soos gewysig die onteiening van die eiendom goedgekeur het op 8 Mei 1980.

3. Neem derhalwe kennis dat genoemde Gemeenskapsontwikkelingsraad gemelde eiendom onteien vanaf die datum van besorging van hierdie kennisgewing.

4. Ingevolge die bepalings van die Onteieningswet, 1975 (Wet 63 van 1975), word u hierby versoek om binne 60 dae vanaf die kennisgewing datum aan my by die adres hieronder gemeld 'n skriftelike verklaring te lewer of te laat lewer waarin die volgende aangedui word:

(a) Wat die totale bedrag is wat u as vergoeding eis en hoeveel van die totale bedrag wat u eis elk van die onderskeie bedrae beoog in artikel 12 (1) (a) van die gemelde Onteieningswet verteenwoordig, asook volledige besonderhede van die samestelling van die afsonderlike bedrae.

(b) Volledige besonderhede van alle verbeterings op die grond hierby onteien wat, na u oordeel, die waarde van die grond raak.

GENERAL NOTICES

NOTICE 593 OF 1980

DEPARTMENT OF COMMUNITY DEVELOPMENT

NOTICE OF EXPROPRIATION

To:

THE UNDERMENTIONED PERSONS, THEIR FIDEICOMMISSARY HEIRS AND TO ALL INTERESTED PARTIES

1. The property described hereunder of which you are, to the knowledge of the Community Development Board, established under section 2 of the Community Development Act (Act 3 of 1966), the registered owner, are required by the said Community Development Board in order to achieve the objects for which the Board was established.

2. Whereas the Minister of Community Development has, in terms of paragraph (a) of subsection (1) of section 38 of the said Act, as amended, approved of the expropriation of the said properties on 8 May 1980.

3. Therefore take notice that the said Community Development Board hereby expropriates the said property, with effect from the date of the service of this notice.

4. In terms of the provisions of the Expropriation Act 1975 (Act 63 of 1975), you are hereby requested to deliver or cause to be delivered to me, within 60 days from the date of notice, at the address stated below, a written statement in which the following are indicated:

(a) The total amount claimed by you as compensation and how much of the total amount claimed by you, represents each of the respective amounts contemplated in section 12 (1) (a) of the said Expropriation Act, as well as full particulars as to how the separate amounts are made up.

(b) Full particulars of all improvements on the land hereby expropriated which, in your opinion, affect the value of the land.

University of Fort Hare
Together in Excellence

(c) Waar van toepassing moet u ook die volgende besonderhede verstrek:

(i) Die stukke wat u akte op die eiendom uitmaak, indien dit in u besit of onder u beheer is;

(ii) indien die stukke nie in u besit of onder u beheer is nie, 'n lys deur u onderteken van gemelde stukke met vermelding van die registrasienommers en datums daarvan en die naam en adres van die persoon in wie se besit of onder wie se beheer daardie stukke is; en

(iii) indien die eiendom intussen deur u verkoop is die naam en adres van die persoon aan wie die eiendom verkoop is sowel as 'n afskrif van die Koopakte.

5. Neem verder kennis dat die eiendomsreg op die onroerende eiendom hierin beskryf, by besorging van hierdie kennisgewing oorgaan op die Raad en die Raad na verstryking van 'n tydperk van minstens sestig (60) dae na die datum van besorging van hierdie kennisgewing gemelde eiendom in besit mag neem.

6. Enige bykomstige inligting verlang kan verkry word van die kantoor van die Streekverteenwoordiger, Kaapstad.

Gedateer te Kaapstad op hede die 6de dag van Augustus 1980.

L. FOUCHÉ, Direkteur-generaal, Departement van Gemeenskapsbou, p/a Die Streekverteenwoordiger, Privaatsak X9027, Kaapstad, 8000.

Beskrywing van eiendom	Geregistreerde eienaar en aandeelhouding	Akte No.
Erf 8440, Kaapstad te Kaapstad (groot 164 m²)	Lajvantie Jessa (gebore Singh) (7/12des); Parsitim das Jessa (1/12de); Siteha Jessa (1/12de); Mogalal Jessa (1/12de); Peama Jessa (1/12de) en Rallie Jessa (1/12de)	8975, gedateer 26 Julie 1943.

(29 Augustus 1980)

(c) Where applicable, you must furnish the following:

(i) Your documents of title to the property, if these are in your possession or under your control;

(ii) if the said documents are not in your possession or under your control, a list signed by you of the document(s) setting forth the registration number(s) and date(s) hereof and the name and address of the person in who's possession or under who's control the document(s) is/are; and

(iii) in the event that the property has subsequently been sold, the name and address of the person to whom it was sold, together with a copy of the Deed of Sale.

5. Further take notice that the ownership in the property, described herein, shall pass to the said Board upon the date of service hereof and the Board may, after the expiry of a period of not less than sixty (60) days from the date of service hereof, take possession of the property.

6. Any additional information required may be obtained from the office of the Regional Representative, Cape Town.

Dated at Cape Town on the 6th day of August 1980.

L. FOUCHÉ, Director-General, Department of Community Development c/o The Regional Representative, Private Bag X9027, Cape Town, 8000.

Description of property	Registered owner and share holding	Title No.
Erf 8440, Cape Town at Cape Town, (measuring 164 m²)	Lajvantie Jessa (born Singh) (7/12ths); Parsitim das Jessa (1/12th); Siteha Jessa (1/12th); Mogalal Jessa (1/12th); Peama Jessa (1/12th) and Rallie Jessa (1/12th)	8975, dated 26 July 1943.

(29 August 1980)

KENNISGEWING 595 VAN 1980

DEPARTEMENT VAN GESONDHEID, WELSYN EN PENSIOENE

WYSIGING VAN DIE REGULASIES BETREFFENDE ANATOMIESE SKENKINGS EN NADOODSE ONDERSOEKE

Hierby word vir algemene inligting bekendgemaak dat die Minister van Gesondheid, Welsyn en Pensioene, kragtens die bevoegdheid hom verleen by artikel 13 (1) (dA) van die Wet op Anatomiese Skenkings en Nadoodse Ondersoeke, 1970 (Wet 24 van 1970), voornemens is om die regulasies uitgevaardig by Goewermentskennisgewing R. 889 van 24 Mei 1974, soos gewysig, verder te wysig deur die voorgeskrewe weefsel, die voorgeskrewe gemagtigde inrigting en die voorgeskrewe doel vermeld in die Bylae hiervan, in onderskeidelik kolom I, kolom II en kolom III van Bylae II in te voeg.

Belanghebbendes word hierby versoek om binne drie maande na die datum van hierdie kennisgewing gemotiveerde kommentaar in te dien by die Direkteur-generaal, Gesondheid, Welsyn en Pensioene, Privaatsak X88, Pretoria, 0001 (vir aandag: mnr. L. A. du Pisanie).

NOTICE 595 OF 1980

DEPARTMENT OF HEALTH, WELFARE AND PENSIONS

AMENDMENT OF THE ANATOMICAL DONATIONS AND POST-MORTEM EXAMINATIONS REGULATIONS

It is hereby notified for general information that the Minister of Health, Welfare and Pensions, in the exercise of the powers vested in him by section 13 (1) (dA) of the Anatomical Donations and Post-Mortem Examinations Act, 1970 (Act 24 of 1970), intends further to amend the regulations promulgated under Government Notice R. 889 of 24 May 1974, as amended, by inserting the prescribed tissue, the prescribed authorised institution and the prescribed purpose set out in the Schedule hereto, in column I, column II and column III, respectively, of Schedule II.

Interested persons are hereby invited to submit substantiated comments to the Director-General of Health, Welfare and Pensions, Private Bag X88, Pretoria, 0001 (for attention: Mr L. A. du Pisanie) within three months of the date of this notice.

University of Fort Hare
Together in Excellence

BYLAE

Kolom I Voorgeskrewe weefsel	Kolom II Voorgeskrewe gemagtigde inrigting	Kolom III Voorgeskrewe doel
Hart.....	Tygerberghospitaal....	Oorplanting en navorsing.

(29 Augustus 1980)

SCHEDULE

Column I Prescribed tissue	Column II Prescribed authorised institution	Column III Prescribed purpose
Heart.....	Tygerberg Hospital....	Transplantation and research.

(29 August 1980)

KENNISGEWING 594 VAN 1980

DEPARTEMENT VAN LANDBOU-TEGNIESE DIENSTE

WET OP PLANTTELERSREGTE, 1976 (WET 15 VAN 1976)

ONTVANGS VAN AANSOEKE OM PLANTTELERSREGTE

Ingevolge die bepalings van artikel 13 (1) van die Wet op Planttelersregte, 1976 (Wet 15 van 1976), gelees met regulasie 2 (4) van die regulasies gepubliseer in Goewermentskennisgewing R. 2185 van 28 Oktober 1977, word hiermee bekendgemaak dat die aansoeke om planttelersregte, besonderhede waarvan in die Bylae hierby verskyn, ontvang is.

Registrateur van Planttelersregte.

NOTICE 594 OF 1980

DEPARTMENT OF AGRICULTURAL TECHNICAL SERVICES

PLANT BREEDERS' RIGHTS ACT, 1976 (ACT 15 OF 1976)

RECEIPT OF APPLICATIONS FOR PLANT BREEDERS' RIGHTS

In terms of the provisions of section 13 (1) of the Plant Breeders' Rights Act, 1976 (Act 15 of 1976), read with regulation 2 (4) of the regulations published in Government Notice R. 2185 of 28 October 1977, it is hereby made known that the applications for plant breeders rights, particulars whereof appear in the Schedule hereto, have been received.

Registrar of Plant Breeders' Rights.

BYLAE/SCHEDULE

ONTVANGS VAN 'N AANSOEK OM 'N PLANTTELERSREG
RECEIPT OF AN APPLICATION FOR A PLANT BREEDER'S RIGHT

Aansoek No. Application No.	Naam en adres van applikant Name and address of applicant	Soort plant Kind of plant	Voorgestelde benaming Proposed denomination	Naam en adres van agent Name and address of agent	Aansoek datum Application date
PT 196.....	R. T. W. Zingel, Posbus/P.O. Box 51683, Randburg, 2125	*Lycopersicon / lycopersicum* (Tamatie/Tomato)	Sjampanje.....	Geen/None.....	23/6/80
PT 197.....	Vide PT 196.....	Vide 196.....	Staatmaker.....	Geen/None.....	23/6/80
PT 198.....	Vide PT 196.....	Vide 196.....	Voortrekker.....	Geen/None.....	23/6/80
PT 199.....	Meilland et Cie, 134bd Meilland, 06601 Antibes, France	*Rosa* hort (Roos/Rose)	Meidragelac.....	J. A. Herholdt Posbus/P.O. Box 17, Eikenhof 1872	23/6/80
•PT 200....	Gunson S.A. (Pty) Ltd, Posbus/P.O. Box 9861, Johannesburg, 2000	*Glycine max* (Sojaboon/Soya bean)	Gunsoy Protrea.....	Geen/None.....	16/7/80
•PT 201....	Vide PT 200.....	Vide PT 200.....	Gunsoy Prima.....	Geen/None.....	16/7/80
•PT 202....	Vide PT 200.....	Vide PT 200.....	Gunsoy Presto.....	Geen/None.....	16/7/80
•PT 203....	Vide PT 200.....	Vide PT 200.....	Gunsoy Pilot.....	Geen/None.....	6/8/80
•PT 204..	Oostelike Transvaalse Koöperasie Bpk., Posbus/P.O. Box 100, Bethal, 2310	*Gossypium hirsutum* (Katoen/Cotton)	Alpha.....	Geen/None.....	7/8/80
•PT 205....	Vide PT 204.....	Vide PT 204.....	Gamma.....	Geen/None.....	7/8/80
•PT 206....	Vide PT 204.....	Vide PT 204.....	Rebel.....	Geen/None.....	7/8/80

• 'n Voorlopige beskermingsbevel is toegestaan vir hierdie variëteit.
• A provisional protective direction has been granted for this variety.

(29 Augustus 1980)/(29 August 1980)

KENNISGEWING 596 VAN 1980

ONTEIENINGSKENNISGEWING VAN ANDER ONROERENDE GOED AS 'N REG (MET AANBOD)

Aan:

1. CAREL MARTHINUS LOTZ;
2. HENDRIK JOHANNES ROOTHMAN;
3. GEORGE FREDERIK KLEINHANS;
4. PIETER CHRISTIAN VAN WYK;
5. JOHANNES HENDRIKUS OOSTHUIZEN;
6. MATTHYS JOHANNES OOSTHUIZEN;
7. HENDRIK PETRUS OOSTHUIZEN;
8. CHRISTIAN JACOBUS VAN SCHALKWIJK;

NOTICE 596 OF 1980

NOTICE OF EXPROPRIATION OF IMMOVABLE PROPERTY OTHER THAN A RIGHT (WITH OFFER)

To:

1. CAREL MARTHINUS LOTZ;
2. HENDRIK JOHANNES ROOTHMAN;
3. GEORGE FREDERIK KLEINHANS;
4. PIETER CHRISTIAN VAN WYK;
5. JOHANNES HENDRIKUS OOSTHUIZEN;
6. MATTHYS JOHANNES OOSTHUIZEN;
7. HENDRIK PETRUS OOSTHUIZEN;
8. CHRISTIAN JACOBUS VAN SCHALKWIJK;

9. PHINEAS ALEX SMUTS;
10. ADRIAN GERHARDUS GELDENHUYS (W/SEUN);
11. EVERT PHILIPPUS VAN SCHALKWYK;
12. ADRIAAN GERHARDUS GELDENHUYS, gebore op 17 Februarie 1911;
13. ELIAS JOHANNES ROODMAN;
14. HENDRIK JOHANNES ROODMAN;
15. CHRISTIAAN JACOBUS VAN SCHALKWYK, gebore op 27 November 1918;
16. MICHAEL D'EGVILLE HARLE STOTT;
17. JACOB DANIEL VAN SCHALKWYK;
18. LOURENS JOHANNES VAN SCHALKWYK;
19. JACOBUS HENDRIK KLEINHANS;
20. CHRISTIAN JACOBUS OOSTHUIZEN;
21. JOHANNES PAULUS VAN SCHALKWYK;
22. CHRISTIAN JACOBUS VAN SCHALKWYK, gebore op 13 Februarie 1928;
23. JOHANNES ALDRIG VAN SCHALKWYK;
24. JACOBUS PETRUS PRINSLOO;
25. WESSEL FREDERIK KLEINHANS;
26. PETRUS JACOBUS VAN ZYL LOTZ;
27. PETRUS JACOBUS GELDENHUYS;
28. EVERT PETRUS GELDENHUYS;
29. MATTHYS LOUWRENS OOSTHUIZEN;
30. JOHANNES ELIAS GELDENHUYS;
31. PIETER GEORGE PRETORIUS;
32. FREDERIK JACOBUS KLEYNHANS;

of enige opvolgers in reg en titel of iedereen wat 'n belang soos beoog in artikel 7 (4) van die Onteieningswet, 1975 (Wet 63 van 1975), het in die hierna beskrewe onverdeelde aandele in ondervermelde eiendom.

1. Geliewe kennis te neem dat die hieronder beskrewe onverdeelde aandele, wat gehou word soos voormeld, in die eiendom beskryf as—

die restant van die plaas Kleine Jongensfontein 494, geleë in die afdeling Riversdal (bekend as Communal Sands), groot as sodanig 500,1362 hektaar,

met alle verbeterings op die grond en alle regte op minerale wat aan die grond heg, hierby kragtens artikel 2 (1) van die Onteieningswet, 1975 (Wet 63 van 1975), ten behoewe van die Republiek van Suid-Afrika onteien word, welke onverdeelde aandele bestaan uit en soos volg gehou word:

1.1 Deur u, Carel Marthinus Lotz, (a) 'n 0,004329 (nul komma nul, nul, vier, drie, twee, nege) aandeel gehou kragtens Akte van Transport T4074/1903, gedateer 26 Maart 1903, en (b) 'n 0,015787 (nul komma nul, een, vyf, sewe, agt, sewe) aandeel gehou kragtens Akte van Transport T3471/1919, gedateer 24 April 1919;

1.2 deur u, Hendrik Johannes Roothman, (a) 'n 0,009124 (nul komma nul, nul, nege, een, twee, vier) aandeel gehou kragtens Akte van Transport T13535/1904, gedateer 10 Desember 1904, en (b) 'n 0,014616 (nul komma nul, een, vier, ses, een, ses) aandeel gehou kragtens Akte van Transport T5738/1909, gedateer 26 Augustus 1909;

1.3 deur u, George Frederik Kleinhans, (a) 'n 0,002678 (nul komma nul, nul, twee, ses, sewe, agt) aandeel gehou kragtens Akte van Transport T12284/1905, gedateer 22 Desember 1905, en (b) 'n 0,002678 (nul komma nul, nul, twee, ses, sewe, agt) aandeel gehou kragtens Akte van Transport T1787/1911, gedateer 24 Maart 1911;

1.4 deur u, Pieter Christian van Wyk, 'n 0,013333 (nul komma nul, een, drie, drie, drie, drie) aandeel gehou kragtens Akte van Transport T1230/1913, gedateer 26 Februarie 1913;

9. PHINEAS ALEX SMUTS;
10. ADRIAN GERHARDUS GELDENHUYS (W/SON);
11. EVERT PHILIPPUS VAN SCHALKWYK;
12. ADRIAAN GERHARDUS GELDENHUYS, born on 17 February 1911;
13. ELIAS JOHANNES ROODMAN;
14. HENDRIK JOHANNES ROODMAN;
15. CHRISTIAAN JACOBUS VAN SCHALKWYK, born on 27 November 1918;
16. MICHAEL D'EGVILLE HARLE STOTT;
17. JACOB DANIEL VAN SCHALKWYK;
18. LOURENS JOHANNES VAN SCHALKWYK;
19. JACOBUS HENDRIK KLEINHANS;
20. CHRISTIAN JACOBUS OOSTHUIZEN;
21. JOHANNES PAULUS VAN SCHALKWYK;
22. CHRISTIAN JACOBUS VAN SCHALKWYK, born on 13 February 1928;
23. JOHANNES ALDRIG VAN SCHALKWYK;
24. JACOBUS PETRUS PRINSLOO;
25. WESSEL FREDERIK KLEINHANS;
26. PETRUS JACOBUS VAN ZYL LOTZ;
27. PETRUS JACOBUS GELDENHUYS;
28. EVERT PETRUS GELDENHUYS;
29. MATTHYS LOUWRENS OOSTHUIZEN;
30. JOHANNES ELIAS GELDENHUYS;
31. PIETER GEORGE PRETORIUS;
32. FREDERIK JACOBUS KLEYNHANS;

or any successors in right and title or any person who has an interest as contemplated in section 7 (4) of the Expropriation Act, 1975 (Act 63 of 1975), in the hereinafter described undivided shares in the undermentioned property.

1. Kindly take notice that the hereinafter described undivided shares, which are held as stated, in the property described as—

the remainder of the farm Kleine Jongensfontein 494, situate in the Division of Riversdale (known as Communal Sands), measuring as such 500,1362 hectares;

together with all improvements thereon and all rights to minerals attaching to the land, are hereby expropriated in terms of section 2 (1) of the Expropriation Act, 1975 (Act 63 of 1975), on behalf of the Republic of South Africa, which undivided shares consist of and are held by you as follows:

1.1 By you, Carel Marthinus Lotz, (a) a 0,004329 (nil comma nil, nil, four, three, two, nine) share held by virtue of Deed of Transfer T4074/1903, dated 26 March 1903, and (b) a 0,015787 (nil, comma nil, one, five, seven, eight, seven) share held by virtue of Deed of Transfer T3471/1919, dated 24 April 1919;

1.2 by you, Hendrik Johannes Roothman, (a) a 0,009124 (nil comma nil, nil, nine, one, two, four) share held by virtue of Deed of Transfer T13535/1904, dated 10 December 1904, and (b) a 0,014616 (nil comma nil, one, four, six, one, six) share held by virtue of Deed of Transfer T5738/1909, dated 26 August 1909;

1.3 by you, George Frederik Kleinhans, (a) a 0,002678 (nil comma nil, nil, two, six, seven, eight) share held by virtue of Deed of Transfer T12284/1905, dated 22 December 1905, and (b) a 0,002678 (nil comma nil, nil, two, six, seven, eight) share held by virtue of Deed of Transfer T1787/1911, dated 24 March 1911;

1.4 by you, Pieter Christian van Wyk, a 0,013333 (nil comma nil, one, three, three, three, three) share held by virtue of Deed of Transfer T1230/1913, dated 26 February 1913;

1.5 deur u, Johannes Hendrikus Oosthuizen, 'n 0,010463 (nul komma nul, een, nul, vier, ses, drie) aandeel gehou kragtens Akte van Transport T9619/1916, gedateer 13 Desember 1916;

1.6 deur u, Matthys Johannes Oosthuizen, en u, Hendrik Petrus Oosthuizen, elk 'n, (a) 0,010481 (nul komma nul, een, nul, vier, agt, een) aandeel gehou kragtens Akte van Transport T2149/1921, gedateer 12 Maart 1921, en (b) elk 'n 0,007893 (nul komma nul, nul, sewe, agt, nege, drie) aandeel gehou kragtens Akte van Transport T2080/1922, gedateer 14 Maart 1922;

1.7 deur u, Christian Jacobus van Schalkwijk, 'n 0,002890 (nul komma nul, nul, twee, agt, nege, nul) aandeel gehou kragtens Akte van Transport T6072/1924, gedateer 7 Julie 1924;

1.8 deur u, Phineas Alex Smuts, (a) 'n 0,012548 (nul komma nul, een, twee, vyf, vier, agt) aandeel gehou kragtens Akte van Transport T1972/1932, gedateer 6 April 1932, (b) 'n 0,004183 (nul komma nul, nul, vier, een, agt, drie) aandeel gehou kragtens Akte van Transport T3195/1932, gedateer 27 Mei 1932, en (c) 'n 0,008365 (nul komma nul, nul, agt, drie, ses, vyf) aandeel gehou kragtens Akte van Transport T712/1935, gedateer 6 Februarie 1935;

1.9 deur u, Adrian Gerhardus Geldenhuys (W/Seun), 'n 0,005553 (nul komma nul, nul, vyf, vyf, vyf, drie) aandeel gehou kragtens Akte van Transport T13622/1937, gedater 22 Desember 1937;

1.10 deur u, Evert Philippus van Schalkwyk, (a) 'n 0,025427 (nul komma nul, twee, vyf, vier, twee, sewe) aandeel gehou kragtens Akte van Transport T3475/1940, gedateer 16 April 1940, (b) 'n 0,012713 (nul komma nul, een, twee, sewe, een, drie) aandeel gehou kragtens Akte van Transport T491/1948, gedateer 13 Januarie 1948, (c) 'n 0,038140 (nul komma nul, drie, agt, een, vier, nul) aandeel gehou kragtens Akte van Transport T492/1948, gedateer 13 Januarie 1948, (d) 'n 0,081100 (nul komma nul, agt, een, een, nul, nul) aandeel gehou kragtens Akte van Transport T16698/1960, gedateer 26 Oktober 1960, en (e) 'n 0,008072 (nul komma nul, nul, agt, nul, sewe, twee) aandeel gehou kragtens Akte van Transport T27593/1970, gedateer 29 September 1970;

1.11 deur u, Adriaan Gerhardus Geldenhuys, gebore op 17 Februarie 1911, 'n 0,009631 (nul komma nul, nul, nege, ses, drie, een) aandeel gehou kragtens Akte van Transport T6090/1947, gedateer 14 April 1947;

1.12 deur u, Elias Johannes Roodman, en u, Hendrik Johannes Roodman, elk 'n 0,002242 (nul komma nul, nul, twee, twee, vier, twee) aandeel gehou kragtens Akte van Transport T17825/1948, gedateer 7 Augustus 1948;

1.13 deur u, Elias Johannes Roodman, 'n (a) 0,002242 (nul komma nul, nul, twee, twee, vier, twee) aandeel gehou kragtens Akte van Transport T1254/1952, gedateer 4 Februarie 1952, en (b) 'n 0,002242 (nul komma nul, nul, twee, twee, vier, twee) aandeel gehou kragtens Akte van Transport T1780/1953, gedateer 19 Februarie 1953;

1.14 deur u, Christiaan Jacobus van Schalkwyk, gebore op 27 November 1918, (a) 'n 0,031689 (nul komma nul, drie, een, ses, agt, nege) aandeel gehou kragtens Akte van Transport T28893/1948, gedateer 22 Desember 1948, (b) 'n 0,006207 (nul komma nul, nul, ses, twee, nul, sewe) aandeel gehou kragtens Akte van Transport T7315/1964, gedateer 1 Mei 1964, en (c) 'n 0,031033 (nul komma nul, drie, een, nul, drie, drie) aandeel gehou kragtens Akte van Transport T7318/1964, gedateer 1 Mei 1964;

1.5 by you, Johannes Hendrikus Oosthuizen, a 0,010463 (nil comma nil, one, nil, four, six, three) share held by virtue of Deed of Transfer T9619/1916, dated 13 December 1916;

1.6 by you, Matthys Johannes Oosthuizen, and you, Hendrik Petrus Oosthuizen, each (a) a 0,010481 (nil comma nil, one, nil, four, eight, one) share held by virtue of Deed of Transfer T2149/1921, dated 12 March 1921, and (b) each a 0,007 893 (nil comma nil, nil, seven, eight, nine, three) share held by virtue of Deed of Transfer T2080/1922, dated 14 March 1922;

1.7 by you, Christian Jacobus van Schalkwijk, a 0,002890 (nil comma nil, nil, two, eight, nine, nil) share held by virtue of Deed of Transfer T6072/1924, dated 7 July 1924;

1.8 by you, Phineas Alex Smuts, (a) a 0,012548 (nil comma nil, one, two, five, four, eight) share held by virtue of Deed of Transfer T1972/1932, dated 6 April 1932, (b) a 0,004183 (nil comma nil, nil, four, one, eight, three) share held by virtue of Deed of Transfer T3195/1932, dated 27 May 1932, and (c) a 0,008365 (nil comma nil, nil, eight, three, six, five) share held by virtue of Deed of Transfer T712/1935, dated 6 February 1935;

1.9 by you, Adrian Gerhardus Geldenhuys (W/Son), a 0,005553 (nil comma nil, nil, five, five, five, three) share held by virtue of Deed of Transfer T13622/1937, dated 22 December 1937;

1.10 by you, Evert Philippus van Schalkwyk, (a) 0,025427 (nil comma nil, two, five, four, two, seven) share held by virtue of Deed of Transfer T3475/1940, dated 16 April 1940, (b) a 0,012713 (nil comma nil, one, two, seven, one, three) share held by virtue of Deed of Transfer T491/1948, dated 13 January 1948, (c) a 0,038140 (nil comma nil, three, eight, one, four, nil) share held by virtue of Deed of Transfer T492/1948, dated 13 January 1948, (d) a 0,081100 (nil comma nil, eight, one, one, nil, nil) share held by virtue of Deed of Transfer T16698/1960, dated 26 October 1960, and (e) a 0,008072 (nil comma nil, nil, eight, nil, seven, two) share held by virtue of Deed of Transfer T27593/1970, dated 29 September 1970;

1.11 by you, Adriaan Gerhardus Geldenhuys, born on 17 February 1911, a 0,009631 (nil comma nil, nil, nine, six, three, one) share held by virtue of Deed of Transfer T6090/1947, dated 14 April 1947;

1.12 by you, Elias Johannes Roodman, and you, Hendrik Johannes Roodman, each a 0,002242 (nil comma nil, nil, two, two, four, two) share held by virtue of Deed of Transfer T17825/1948, dated 7 August 1948;

1.13 by you, Elias Johannes Roodman, (a) a 0,002242 (nil comma nil, nil, two, two, four, two) share held by virtue of Deed of Transfer T1254/1952, dated 4 February 1952, and (b) a 0,002242 (nil comma nil, nil, two, two, four, two) share held by virtue of Deed of Transfer 1780/1953, dated 19 February 1953;

1.14 by you, Christiaan Jacobus van Schalkwyk, born on 27 November 1918, (a) a 0,031689 (nil comma nil, three, one, six, eight, nine) share held by virtue of Deed of Transfer T28893/1948 ,dated 22 December 1948, (b) a 0,006207 (nil comma nil, nil, six, two, nil, seven) share held by virtue of Deed of Transfer T7315/1964, dated 1 May 1964, and (c) a 0,031033 (nil comma nil, three, one, nil, three, three) share held by virtue of Deed of Transfer T7318/1964, dated 1 May 1964;

1.15 deur u, Michael D'Egville Harle Stott, 'n 0,025095 (nul komma nul, twee, vyf, nul, nege, vyf) aandeel gehou kragtens Akte van Transport T20240/1949, gedateer 19 Desember 1949;

1.16 deur u, Jacob Daniel van Schalkwyk, en u, Lourens Johannes van Schalkwyk, elk, (a) 'n 0,008418 (nul komma nul, nul, agt, vier, een, agt) aandeel gehou kragtens Akte van Transport T16377/1950, gedateer 27 Oktober 1950, (b) elk 'n 0,013485 (nul komma nul, een, drie, vier, agt, vyf) aandeel gehou kragtens Akte van Transport T14935/1953, gedateer 25 September 1953, (c) elk 'n 0,031710 (nul komma nul, drie, een, sewe, een, nul) aandeel gehou kragtens Akte van Transport T8697/1955, gedateer 9 Junie 1955, en (d) elk 'n 0,018620 (nul komma nul, een, agt, ses, twee, nul) aandeel gehou kragtens Akte van Transport T7317/1964, gedateer 1 Mei 1964;

1.17 deur u, Jacobus Hendrik Kleinhans, (a) 'n 0,011557 (nul komma nul, een, een, vyf, vyf, sewe) aandeel gehou kragtens Akte van Transport T16379/1950, gedateer 27 Oktober 1950, (b) 'n 0,009507 (nul komma nul, nul, nege, vyf, nul, sewe) aandeel gehou kragtens Akte van Transport T18946/1956, gedateer 27 Desember 1956, (c) 'n 0,009507 (nul komma nul, nul, nege, vyf, nul, sewe) aandeel gehou kragtens Akte van Transport T18947/1956, gedateer 27 Desember 1956, en (d) 'n 0,006338 (nul komma nul, nul, ses, drie, drie, agt) aandeel gehou kragtens Sertifikaat van Geregistreerde Titel 18948/1956, gedateer 27 Desember 1956;

1.18 deur u, Christian Jacobus Oosthuizen, 'n 0,063420 (nul komma nul, ses, drie, vier, twee, nul) aandeel gehou kragtens Akte van Transport T18972/1952, gedateer 21 November 1952;

1.19 deur u, Johannes Paulus van Schalkwyk, u, Christian Jacobus van Schalkwyk, gebore op 13 Februarie 1928, en u, Johannes Aldrig van Schalkwyk, elk 'n 0,005067 (nul komma nul, nul, vyf, nul, ses, sewe) aandeel gehou kragtens Akte van Transport T14936/1953, gedateer 25 September 1953;

1.20 deur u, Jacobus Petrus Prinsloo, (a) 'n 0,012066 (nul komma nul, een, twee, nul, ses, ses) aandeel gehou kragtens Akte van Transport T20569/1955, gedateer 8 Desember 1955, en (b) 'n 0,004340 (nul komma nul, nul, vier, drie, vier, nul) aandeel gehou kragtens Akte van Transport T12718/1974, gedateer 10 Mei 1974;

1.21 deur u, Wessel Frederik Kleinhans, 'n 0,006338 (nul komma nul, nul, ses, drie, drie, agt) aandeel gehou kragtens Akte van Transport T14137/1956, gedateer 2 Oktober 1956;

1.22 deur u, Petrus Jacobus van Zyl Lotz, (a) 'n 0,000434 (nul komma nul, nul, nul, vier, drie, vier) aandeel gehou kragtens Akte van Transport T19024/1972, gedateer 9 Augustus 1972, (b) 'n 0,000434 (nul komma nul, nul, nul, vier, drie, vier) aandeel gehou kragtens Akte van Transport T19025/1972, gedateer 9 Augustus 1972, en (c) 'n 0,000434 (nul komma nul, nul, nul, vier, drie, vier) aandeel gehou kragtens Akte van Transport T19026/1972, gedateer 9 Augustus 1972;

1.23 deur u, Petrus Jacobus Geldenhuys en u, Evert Petrus Geldenhuys, elk 'n 0,053380 (nul komma nul, vyf, drie, drie, agt, nul) aandeel gehou kragtens Akte van Transport T19333/1972, gedateer 14 Augustus 1972, en deur u Petrus Jacobus Geldenhuys 'n 0,053380 (nul komma nul, vyf, drie, drie, agt, nul) aandeel gehou kragtens Akte van Transport T17173/1979, gedateer 3 Julie 1979;

1.24 deur u, Matthys Louwrens Oosthuizen, 'n 0,072675 (nul komma nul, sewe, twee, ses, sewe, vyf) aandeel gehou kragtens Akte van Transport T35800/1974, gedateer 23 Oktober 1974;

1.15 by you, Michael D'Egville Harle Stott, a 0,025095 (nil comma nil, two, five, nil, nine, five) share held by virtue of Deed of Transfer T20240/1949, dated 19 December 1949;

1.16 by you, Jacob Daniel van Schalkwyk, and you, Lourens Johannes van Schalkwyk, each (a) a 0,008418 (nil comma nil, nil, eight, four, one, eight) share held by virtue of Deed of Transfer T16377/1950, dated 27 October 1950, (b) each a 0,013485 (nil comma nil, one, three, four, eight, five) share held by virtue of Deed of Transfer T14935/1953, dated 25 September 1953, (c) each a 0,031710 (nil comma nil, three, one, seven, one, nil) share held by virtue of Deed of Transfer T8697/1955, dated 9 June 1955, and (d) each a 0,018620 (nil coma nil, one, eight, six, two, nil) share held by virtue of Deed of Transfer T7317/1964, dated 1 May 1964;

1.17 by you, Jacobus Hendrik Kleinhans, (a) 0,011557 (nil comma nil, one, one, five, five, seven) share held by virtue of Deed of Transfer T16379/1950, dated 27 October 1950, (b) a 0,009507 (nil comma nil, nil, nine, five, nil, seven) share held by virtue of Deed of Transfer T18946/1956, dated 27 December 1956, (c) a 0,009507 (nil comma nil, nil, nine, five, nil, seven) share held by virtue of Deed of Transfer T18947/1956, dated 27 December 1956, and (d) a 0,006338 (nil comma nil, nil, six, three, three, eight) share held by virtue of Certificate of Registered Title 18948/1956, dated 27 December 1956;

1.18 by you, Christian Jacobus Oosthuizen, a 0,063420 (nil comma nil, six, three, four, two, nil) share held by virtue of Deed of Transfer T18972/1952, dated 21 November 1952;

1.19 by you, Johannes Paulus van Schalkwyk, you, Christian Jacobus van Schalkwyk, born on 13 February 1928, and you, Johannes Aldrig van Schalkwyk, each a 0,005067 (nil comma nil, nil, five, nil, six, seven) share held by virtue of Deed of Transfer T14936/1953, dated 25 September 1953;

1.20 by you, Jacobus Petrus Prinsloo, (a) a 0,012066 (nil comma nil, one, two, nil, six, six) share held by virtue of Deed of Transfer T20569/1955, dated 8 December 1955, and (b) a 0,004340 (nil comma nil, nil, four, three, four, nil) share held by virtue of Deed of Transfer T12718/1974, dated 10 May 1974;

1.21 by you, Wessel Frederik Kleinhans, a 0,006338 (nil comma nil, nil, six, three, three, eight) share held by virtue of Deed of Transfer T14137/1956, dated 2 October 1956;

1.22 by you, Petrus Jacobus van Zyl Lotz, (a) a 0,000434 (nil comma nil, nil, nil, four, three, four) share held by virtue of Deed of Transfer T19024/1972, dated 9 August 1972, (b) a 0,000434 (nil comma nil, nil, nil, four, three, four) share held by virtue of Deed of Transfer T19025/1972, dated 9 August 1972, and (c) a 0,000434 (nil comma nil, nil, nil, four, three, four) share held by virtue of Deed of Transfer T19026/1972, dated 9 August 1972;

1.23 by you, Petrus Jacobus Geldenhuys, and you, Evert Petrus Geldenhuys, each a 0,053380 (nil comma nil, five, three, three, eight, nil) share held by virtue of Deed of Transfer T19333/1972, dated 14 August 1972, and by you, Petrus Jacobus Geldenhuys, a 0,053380 (nil comma nil, five, three, three, eight, nil) share held by virtue of Deed of Transfer T17173/1979, dated 3 July 1979;

1.24 by you, Matthys Louwrens Oosthuizen, a 0,072675 (nil comma nil, seven, two, six, seven, five) share held by virtue of Deed of Transfer T35800/1974, dated 23 October 1974;

1.25 deur u, Johannes Elias Geldenhuys, 'n 0,039462 (nul komma nul, drie, nege, vier, ses, twee) aandeel gehou kragtens Akte van Transport T6771/1975, gedateer 21 Maart 1975;

1.26 deur u, Pieter George Pretorius, 'n 0,012779 (nul komma nul, een, twee, sewe, sewe, nege) aandeel gehou kragtens Akte van Transport T35381/1976, gedateer 12 November 1976; en

1.27 deur u, Frederik Jacobus Kleynhans, 'n 0,009524 (nul komma nul, nul, nege, vyf, twee, vier) aandeel gehou kragtens Akte van Transport T8337/1978, gedateer 25 April 1978.

2. Die onteiening word van krag dertig (30) dae vanaf die datum van publikasie van hierdie kennisgewing in die *Staatskoerant*, op welke datum die eiendomsreg van die onteiende goed op die Staat oorgaan.

3. Ingevolge die bepalings van die Onteieningswet, 1975 (Wet 63 van 1975)—

(a) word die totale bedrag van R5 501,50 (vyfduisend vyfhonderd en een rand vyftig sent) hierby as vergoeding ingevolge artikel 12 (1) (a) en (2) van gemelde Wet aangebied (hieronder die vergoedingsaanbod genoem);

(b) word u aandag daarop gevestig dat die vergoedingsaanbod—

(i) teruggetrek kan word indien 'n huurder, deelsaaier of bouer 'n reg bedoel in artikel 9 (1) (d) (i), (iii) of (iv) van gemelde Wet op die onteiende goed het;

(ii) kragtens artikel 10 (5) van gemelde Wet as deur u aanvaar beskou word indien 'n aansoek om die vasstelling van die vergoedingsbedrag nie binne agt maande (of sodanige langer tydperk as wat die Minister bepaal) na die datum van die vergoedingsaanbod deur u by 'n vergoedingshof of 'n afdeling van die Hooggeregshof wat jurisdiksie het, ingedien word nie, tensy daar voor die verstryking van bedoelde tydperk ooreengekom is om die geskil aangaande die bedrag van die vergoeding aan arbitrasie te onderwerp of om sodanige bedrag deur 'n vergoedingshof te laat vasstel;

(c) word u hierby versoek om binne 60 dae na die datum van publikasie van hierdie kennisgewing in die *Staatskoerant* aan my by die adres onderaan hierdie kennisgewing gemeld, 'n skriftelike verklaring te lewer of te laat lewer waarin die volgende aangedui word:

(i) Of u die vergoedingsbedrag hierin gemeld, aanneem of, indien u die bedrag nie aanneem nie, wat die totale bedrag is wat u as vergoeding eis en hoeveel van die bedrag elk van die onderskeie bedrae beoog in artikel 12 (1) (a) en (2) van gemelde Wet verteenwoordig, asook volledige besonderhede van die samestelling van die afsonderlike bedrae;

(ii) indien u die vergoedingsbedrag NIE aanneem nie, volledige besonderhede van alle verbeterings op die onteiende grond wat, na u oordeel, die waarde van die grond raak;

(iii) waar van toepassing, ook die volgende besonderhede:

(aa) Indien die grond voor die datum van publikasie van hierdie kennisgewing in die *Staatskoerant* vir sake- of landboudoeleindes verhuur is by wyse van 'n ongeregistreerde huurkontrak, die naam en adres van die huurder, vergesel van die huurkontrak of 'n gewaarmerkte afskrif daarvan indien dit op skrif is, of volledige besonderhede van die kontrak indien dit nie op skrif is nie;

1.25 by you, Johannes Elias Geldenhuys, a 0,039462 (nil comma nil, three, nine, four, six, two) share held by virtue of Deed of Transfer T6771/1975, dated 21 March 1975;

1.26 by you, Pieter George Pretorius, a 0,012779 (nil comma nil, one, two, seven, seven, nine) share held by virue of Deed of Transfer T35381/1976, dated 12 November 1976; and

1.27 by you, Frederik Jacobus Kleynhans, a 0,009524 (nil comma nil, nil, nine, five, two, four) share held by virtue of Deed of Transfer T8337/1978, dated 25 April 1978.

2. The expropriation shall take effect thirty (30) days from the date of publication of this notice in the *Gazette*, from which date the ownership of the expropriated property shall vest in the Sate.

3. In terms of the Expropriation Act, 1975 (Act 63 of 1975)—

(a) the total amount of R5 501,50 (five thousand five hundred and one rand and fifty cents) is hereby offered as compensation in terms of section 12 (1) (a) and (2) of the said Act (hereinafter referred to as the offer of compensation);

(b) your attention is invited to the fact that the offer of compensation—

(i) can be withdrawn if a lessee, share-cropper or builder has a right contemplated in section 9 (1) (d) (i), (iii) or (iv) of the said Act in respect of the property;

(ii) shall, in terms of section 10 (5) of the said Act, be deemed to have been accepted by you if an application for the determination of the compensation is not made by you to a compensation court or a division of the Supreme Court with jurisdiction within eight months (or such longer period as the Minister may allow) of the date of the offer of compensation, unless it has, prior to the expiration of this period, been agreed to submit the dispute regarding the amount of compensation to arbitration or to have such compensation determined by a compensation court;

(c) you are hereby requested to deliver or cause to be delivered to me within 60 days of the date of publication of this notice in the *Gazette*, to the address at the bottom of this notice, a written statement in which the following are set out:

(i) Whether you accept the amount of compensation mentioned herein or, if you refuse it, what total amount is claimed by you as compensation and how much of the amount represents each of the respective amounts contemplated in section 12 (1) (a) and (2) of the said Act, and full particulars as to how such amounts are made up;

(ii) if you REFUSE the offer of compensation, full particulars of all improvements on the expropriated property which in your opinion affect the value of the land;

(iii) the following particulars, where applicable:

(aa) If, prior to the date of publication of this notice in the *Gazette*, the land was leased for business or agricultural purposes by unregistered lease, the name and address of the lessee, accompanied by the lease or a certified copy thereof, if it is in writing, or full particulars of the lease, if it is not in writing;

(bb) indien die grond voor die datum van publikasie van hierdie kennisgewing in die *Staaatskoerant*, deur u as eienaars verkoop is, die naam en adres van die koper, tesame met die koopkontrak of 'n gewaarmerkte afskrif daarvan;

(cc) indien 'n gebou op die grond opgerig is en die gebou onderworpe is aan 'n retensiereg ten gunste van 'n bouer uit hoofo van 'n skriftelike boukontrak, die naam en adres van die bouaannemer, tesame met die boukontr . of 'n gewaarmerkte afskrif daarvan;

(dd) indien die grond op die datum van publikasie van hierdie kennisgewing in die *Staatskoerant*, deur 'n deelsaaier bewerk is, die naam en adres van die deelsaaier, vergesel van die deelsaaierskontrak of 'n gewaarmerkte afskrif daarvan indien dit op skrif is, of volledige besonderhede van die kontrak indien dit nie op skrif is nie;

(iv) die adres waarheen u verlang dat verdere stukke in verband met die onteiening aan u gepos word.

4. Verder word u hierby versoek om binne 60 dae na die datum van publikasie van hierdie kennisg ing in die *Staatskoerant* die titelbewyse van die onteiende goed aan my te lewer of te laat lewer of, indien dit nie in u besit of onder u beheer is nie, skriftelike besonderhede van die naam en adres van die persoon in wie se besit of onder wie se beheer dit is.

5. Die goed wat hierby onteien word, word dertig (30) dae na die datum van publikasie van hierdie kennisgewing in die *Staatskoerant* deur die Staat in besit geneem.

G. S. ROHDE, Ondersekretaris, *p.p.* Minister van Gemeenskapsbou (Kragtens Spesiale Algemene Volmag 279/1980, gedateer 6 Junie 1980).

Adres: Die Direkteur-generaal van Gemeenskapsbou (Tak Grondsake), Privaatsak X390, Pretoria, 0001.

As getuies:

1. I. A. VAN NIEKERK.
2. J. SMITH.

Plek.—Pretoria.

Datum van ondertekening.—25 Julie 1980.

(29 Augustus 1980)

(bb) if, prior to the date of publication of this notice in the *Gazette*, the land was sold by you as owners, the name and address of the buyer, accompanied by the contract of purchase and sale or a certified copy thereof;

(cc) if a building has been erected on the land and such building is subject to a builder's lien by virtue of a written building contract, the name and address of the building contractor, accompanied by the building contract or a certified copy thereof;

(dd) if, on the date of publication of this notice in the *Gazette*, the land is being farmed by a share-cropper, the name and address of such share-cropper, accompanied by the share-cropper contract or a certified copy thereof, if it is in writing, or full particulars of the contract, if it is not in writing;

(iv) the address to which further documents in connection with the expropriation should be posted to you.

4. You are hereby further requested to deliver or cause to be delivered to me within 60 days of the date of publication of this notice in the *Gazette*, the title deeds of the expropriated property or, if such deeds are not in your possession or under your control, written particulars of the name and address of the person in whose possession or under whose control they are.

5. The property hereby expropriated shall be taken into possession by the State thirty (30) days from the date of publication of this notice in the *Gazette*.

G. S. ROHDE, Under-Secretary, *p.p.* Minister of Community Development (Under Special General Power of Attorney 279/1980, dated 6 June 1980).

Address: The Director-General of Community Development (Land Affairs Branch), Private Bag X390, Pretoria, 0001.

As witnesses:

1. I. A. VAN NIEKERK.
2. J. SMITH.

Place.—Pretoria.

Date of signature.—25 July 1980.

(29 August 1980)

KENNISGEWING 601 VAN 1980

DEPARTEMENT VAN GEMEENSKAPSBOU

VOORGESTELDE VERHURING VAN 'N TERREIN IN DIE SONDAGSRIVIER TE CANNONVILLE, AFDELING PORT ELIZABETH, AAN MACKAY BRIDGE ANGLING CLUB

Hierby word ingevolge artikel 3 (5) van die Strandwet, No. 21 van 1935, bekendgemaak dat die Minister van Gemeenskapsbou, voornemens is om 'n terrein, groot ongeveer 20 vierkante meter, geleë onderkant die hoogwatermerk van die Sondagsrivier te Cannonville, aan Mackay Bridge Angling Club te verhuur vir die aanbring en instandhouding van 'n aanlegsteier.

'n Liggingsplan lê ter insae in die kantoor van die Streekverteenwoordiger, Departement van Gemeenskapsbou (Tak Grondsake), Douanehuis, Heerengracht, Kaapstad, en in die kantoor van die Sekretaris, Afdelingsraad van Dias, Port Elizabeth.

(1/04-100-90029)

(29 Augustus 1980)

NOTICE 601 OF 1930

DEPARTMENT OF COMMUNITY DEVELOPMENT

PROPOSED LEASE OF A SITE IN THE SUNDAYS RIVER AT CANNONVILLE, DIVISION OF PORT ELIZABETH, TO MACKAY BRIDGE ANGLING CLUB

Notice is hereby given in terms of section 3 (5) of the Sea-Shore Act, No. 21 of 1935, that the Minister of Community Development, proposes to lease a site, measuring approximately 20 square metres, situate below the highwater mark of the Sundays River, to Mackay Bridge Angling Club for the purpose of the erection and maintenance of a jetty.

A locality plan lies for inspection at the office of the Regional Representative, Department of Community Development (Land Affairs Branch), Customs House, Heerengracht, Cape Town, and at the office of the Secretary, Divisional Council of Dias, Port Elizabeth.

(1/04-100-90029)

(29 August 1980)

University of Pretoria
Etyd van Excellence

KENNISGEWING 600 VAN 1980—NOTICE 600 OF 1980

KWARTAALLIKSE OPGAWE VAN BRANDMERKE GEREGISTREER VANAF 1 APRIL 1980 TOT 30 JUNIE 1980
QUARTERLY RETURN OF BRANDS REGISTERED FROM 1 APRIL 1980 TO 30 JUNE 1980

Brandmerk Brand	Naam van eienaar Name of owner	Adres Address	Datum van registrasie Date of registration
⊙BA	A. Kock	Pomfret Asbestosmyn, Pomfret	1/4/80
⊙BB	F. J. Kotzee	Posbus 1822, Pietersburg	1/4/80
⊙BC	C. J. Goosen	Gavinlaan 11, Florida-Noord	1/4/80
⊙BD	D. du Plessis de Beer	Laerskool Steenbokpan, Steenbokpan	2/4/80
⊙BE	E. R. Vogan	Posbus 301, Ladana, Pietersburg	2/4/80
⊙BF	F. B. H. Arnoldi	Plot 11, Palmietfontein, Pietersburg (Posbus 446)	3/4/80
⊙BG	G. D. Tsele	Private Bag X1388, Zeerust	3/4/80
⊙BH	A. Hibbert	Posbus 427, Pietersburg	3/4/80
⊙BI	L. Lotlhare	Heuningvlei D 999, Vryburg	3/4/80
⊙BJ	J. L. Pieterse	De Loskop, Pk. Kalkbank	9/4/80
⊙BK	C. J. Kruger	Groot Constantia, Posbus 169, Wesselsbron	9/4/80
⊙BL	J. G. F. Ludike	Morgenzon, Posbus 568, Pietersburg	9/4/80
⊙BM	M. A. W. Niemand	Loganstraat 123, Edvan Park, Pietersburg	14/4/80
⊙BN	J. Nicolaas	Boshoff Mynhardskraal, Pk. Bergnek	14/4/80
⊙BO	A. A. Oberholzer	"Uitkoms", Posbus 104, Ermelo	14/4/80
⊙BP	P. J. van der Walt	1 Valmont, Cheviotweg-Oos, Florida Heuwels	14/4/80
⊙BQ	A. S. Mogale	P.O. Box 101, Saulspoort	16/4/80
⊙BR	R. Schulenburg	Posbus 10, Kalkbank	16/4/80
⊙BS	S. Jordt	Pk. Kroondal	16/4/80
⊙BT	M. S. Kgotlang	Heuningvlei D999, Vryburg	16/4/80
⊙BU	J. J. Segoe	Private Bag X92098, Phokeng	17/4/80
⊙BV	C. V. Robinson	"Dwarsfontein" 571, Pk. Ellisras	17/4/80
⊙BW	S. J. Tspesejane	Lekwene Memorial School, P.O. Norlim, Norlim	17/4/80
⊙BX	O. J. Jakgosi	1535 Kerkstraat, Vryburg	17/4/80
⊙BY	H. Louwrens	Rietfontein, Posbus 15, Platrand	17/4/80
⊙BZ	S. M. Vorster	Posbus 95, Dendron	17/4/80
⊙CA	J. J. Abrie	Posbus 192, Roodepoort	17/4/80
⊙CB	A. B. Bezuidenhout	Posbus 2014, Pietersburg	17/4/80
⊙CC	J. J. Steyn	Posbus 1053, Papkuil, Pietersburg	17/4/80
⊙CD	P. M. de Kock	Posbus 20, Rooiberg, Transvaal	18/4/80
⊙CE	J. S. Sellschop	Posbus 1323, Papkuil, Pietersburg	18/4/80
⊙CF	J. van der Merwe	Posbus 201, Winterton	18/4/80
⊙CG	J. M. Gaeonale	Botswana Store, Private Bag D1011, Vryburg	18/4/80
⊙CH	J. J. H. Hattingh	Posbus 80, Hoedspruit	18/4/80
⊙CI	M. S. Mosiapoa	Posbus 621, Taung Station	18/4/80
⊙CJ	J. C. Potgieter	Posbus 1323, Pietersburg	21/4/80
⊙CK	K. G. Kiti	Private Bag D1054, Dipudi Cummunity School, Vryburg	21/4/80
⊙CL	P. C. Lingenfelder	Posbus 74, Mooinooi	21/4/80
⊙CM	M. P. Mohitihi	Kokomeng Com. School, Private Bag Kokomeng, P.L. Taung Station	21/4/80
⊙CN	H. H. Nel	Privaatsak X174, Vaalwater	21/4/80
⊙CO	S. C. Bezuidenhout	Posbus 609, Pietersburg	21/4/80
⊙CP	N. B. Seforwe	P.O. Motswedi via Zeerust	22/4/80
⊙CQ	B. J. van Hamen	P/a C. H. Loots, Posbus 33, Skuinsdrif (distrik Marico)	22/4/80
⊙CR	A. Roelofse	Privaatsak X648, Oudtshoorn	22/4/80
⊙CS	N. L. Seeleco	Private Bag D999, Heuningvlei	23/4/80
⊙CT	J. J. B. Luus	Posbus 2010, Pietersburg	23/4/80
⊙CU	J. Lebese	Posbus 335, Ventersfontein, Vaalwater	23/4/80
⊙CV	C. N. Venter	Pietersburg, Pk. Bergnek	24/4/80
⊙CW	S. M. Seodi	Private Bag X2065, Momtshiwa	24/4/80
⊙CX	I. P. Masaseng	P.O. Box 84, Ganyesa	24/4/80
⊙CY	L. P. Fourie	Tweerivier, Pk. Beestekraal	24/4/80
⊙CZ	R. D. Allison	P.O. Box 1878, Pietersburg, Bultfontein	24/4/80
⊙DA	E. K. Matshoge	Mapaputte Comm. School, Private Bag X91053, Phokeng	25/4/80
⊙DB	B. W. Venter	Posbus 22, Dendron	25/4/80
⊙DC	M. J. Moagi	Gopane	25/4/80
⊙DD	T. C. Ditsebe	Pomfret Asbesmyn, Poskantoor Pom-Pom, 8619 via Vryburg	25/4/80
⊙DE	J. L. O. Esterhuizen	Posbus 181, Swartruggens	25/4/80
⊙DF	K. H. Lerumo	Poskantoor Swartfontein, oor Zeerust	28/4/80
⊙DG	M. L. Kapoledi	Room G 76, Compound, Pomfret	28/4/80
⊙DH	J. W. Haskins	Posbus 194, Leeudoringstad	28/4/80
⊙DI	S. H. Sehunoe	Private Bag 91085, Phokeng	20/4/80
⊙DJ	D. J. Wolfaardt	Posbus 8, Lothair	30/4/80
⊙DK	A. Kelsey	Posbus 195, Pietersburg	30/4/80
⊙DL	M. T. Loots	Posbus 93, Rustenburg	30/4/80
⊙DM	M. E. Jansen van Vuuren	Posbus 11, Ohrigstad	30/4/80
⊙DN	W. Bango	Private Bag X92098, Phokeng	5/5/80
⊙DO	L. P. Tshotetsi	Moubana Vrischgewacht, Posbus 12, Modimosana	12/5/80
⊙DP	D. P. Liebenberg	Posbus 346, Vaalwater	12/5/80
⊙DQ	M. L. Matose	Private Bag D955, Vryburg	12/5/80
⊙DR	R. M. Mogapi	Elandsdoorns Cash Store, Private Bag 91056, Phokeng	12/5/80
⊙DS	P. B. Gaboalaswe	P.B.M. Union, Section B, Hostel Room 39, P.O. Swartklip	13/5/80
⊙DT	P. J. du Toit	Gardenia Woonstel 101, Johnstonstraat, Sunnyside	13/5/80
⊙DU	L. Modisane	P.O. Motswedi, via Zeerust	13/5/80
⊙DV	K. S. van Eeden	Posbus 934, Pietersburg	14/5/80
⊙DW	W. M. P. Koekemoer	Raasblaarstraat 8, Posbus 215, Swartklip	14/5/80
⊙DX	M. J. Khunou	1610 Boitumelo Township, Tlhabane	14/5/80
⊙DY	T. L. Mowasa	Nuwedrift, Private Bag 2675, Potgietersrus	16/5/80
⊙DZ	E. T. Riet	P.O. Box 134, Pokwani	16/5/80

Brandmerk Brand	Naam van eienaar Name of owner	Adres Address	Datum van registrasie Date of registration
⊙ E A	J. J. de Lange	Posbus 1873, Pietersburg	19/5/80
⊙ E B	A. Bester	Riebelton, Privaatsak 1017, Waterpoort, Noord-Transvaal	19/5/80
⊙ E C	J. C. P. Boshoff	Posbus 53, Zeerust	19/5/80
⊙ E D	G. P. Emslie	Posbus 143, Ellisras	19/5/80
⊙ E E	P. B. E. Erasmus	Vaalpenskraal, Pk. Kiesel	19/5/80
⊙ E F	J. F. P. Booyse	Doornfontein, Pk. Atoom	20/5/80
⊙ E G	M. M. Cohen	16 Kwaggaweg (Posbus 243), Warmbad	20/5/80
⊙ E H	R. S. Seikanelo	Private Bag, Modimong	20/5/80
⊙ E I	W. M. Mosagale	Angelo Station, Boksburg	20/5/80
⊙ E J	J. G. van Niekerk	Rugby, Posbus 38, Tweeling	20/5/80
⊙ E K	K. J. Mmopi	Private Bag X91085, Phokeng	20/5/80
⊙ E L	J. J. Nel	Zandfontein, Posbus 380, Vaalwater	21/5/80
⊙ E M	L. J. Marais	Posbus 194, Leeudoringstad	21/5/80
⊙ E N	J. Nel	Posbus 985, Rustenburg	22/5/80
⊙ E O	S. J. Oosthuizen	Posbus 211, Pietersburg	23/5/80
⊙ E P	P. D. van der Merwe	Posbus 53, Zeerust	23/5/80
⊙ E Q	R. D. Nakedi	Private Bag X91085, Phokeng	23/5/80
⊙ E R	R. J. Matone	Private Bag X91085, Phokeng	23/5/80
⊙ E S	P. B. Monareng	Privaatsak 1013, Swartruggens	27/5/80
⊙ E T	T. M. Pelesi	404 Zone 3, Itsoseng	27/5/80
⊙ E U	P. Diole	Private Bag X91085, Phokeng	28/5/80
⊙ E V	J. v. W. Lindhout	Posbus 2374, Pietersburg	28/5/80
⊙ E W	B. F. Wiese	Goeiehoop, Posbus 6, Lady Grey	28/5/80
⊙ E X	J. J. Moloto	P.O. Mokgatlha	29/5/80
⊙ E Y	D. S. Mone	P.O. Mabalastad, Swartruggens	30/5/80
⊙ E Z	L. Mowasa	Private Bag 2675, Potgietersrus	30/5/80
⊙ F A	M. V. Moseki	P.B.C. 934, Groengrond, via Vryburg, Cape Province	2/6/80
⊙ F B	M. V. Maje	Private Bag X510, Taung	2/6/80
⊙ F C	J. C. Botha	Doornspruit, Posbus 299, Vaalwater	2/6/80
⊙ F D	J. S. du Preez Potgieter	Posbus 21, Rysmierbult	2/6/80
⊙ F E	S. G. Maitbako	Department of Works, Private Bag X2, Ganyesa	3/6/80
⊙ F F	S. J. Landgoed (Edms.) Bpk	Posbus 68, Ventersdorp	3/6/80
⊙ F G	W. J. Grobbelaar	Posbus 3, Eerstegoud	4/6/80
⊙ F H	M. G. Dioke	Heuningvlei, Private Bag C934, Vryburg	4/6/80
⊙ F I	I. Mogapi	P.O. Molelema, via Taung Station	4/6/80
⊙ F J	M. G. Mokgejane	P.O. Motswedi, Zeerust	6/6/80
⊙ F K	R. T. Leseane	Uitkyk Store, P.O. Box 81, Groot Marico	6/6/80
⊙ F L	R. K. Lejaka	P.O. Box 83, Pokwani	6/6/80
⊙ F M	M. Cohen	16 Kwaggaweg, Warmbad	9/6/80
⊙ F N	M. F. Mathuma	Sandfontein, Pk. Pietersburg	9/6/80
⊙ F O	L. Gadda	Posbus 43, Dendron	9/6/80
⊙ F P	K. B. Paul	Private Bag D994, Vryburg	10/6/80
⊙ F Q	N. J. Mere	Dinokana/Lehurutshe District	10/6/80
⊙ F R	S. P. Roodt	Posbus 20407, Noordbrug	11/6/80
⊙ F S	A. Scholtz en J. Scholtz	Kruisstraat 4, Danville, Mafeking	12/6/80
⊙ F T	T. F. Tumelo	Private Bag Vrisgewacht, via Swartruggens	12/6/80
⊙ F U	T. E. Modise	Private Bag 91085, Phokeng	16/6/80
⊙ F V	M. J. Selloe	Private Bag 91085, Phokeng	16/6/80
⊙ F W	M. J. Willemse	Wintersveld, Posbus 33, Alldays	17/6/80
⊙ F X	G. R. Nkate	Department of Agriculture, Private Bag X2039, Montshioa	17/6/80
⊙ F Y	R. J. Kgwakgwe	P.O. Straatsdrift via Groot Marico	17/6/80
⊙ F Z	Q. Z. Ngubeni	Private Bag 91085, Phokeng	17/6/80
⊙ G A	C. J. Adam	Wildebeesfontein, Posbus 761, Pk. Pietersburg	18/6/80
⊙ G B	A. S. Botha	Posbus 216, Morgenzon	18/6/80
⊙ G C	C. E. M. Mokgoko	Department of Agriculture, Private Bag X2039, Montshiwa	18/6/80
⊙ G D	D. R. Jansen van Vuuren	Burlingtonlaan 730, Parktown, Pretoria	19/6/80
⊙ G E	D. Dingoko	Private Bag X2080, Montshiwa	20/6/80
⊙ G F	N. J. Ferreira	Posbus 1051, Klerksdorp	20/6/80
⊙ G G	A. N. Grobler	Julianastraat 25, Ontdekkers Park, Johannesburg	20/6/80
⊙ G H	J. O. Thebeyapelo	P.O. Box 74, Kuruman	20/6/80
⊙ G I	M. S. Balepile	P.O. Box 50, Pudamoe	23/6/80
⊙ G J	K. N. Sekwele	1475 Tihabane	23/6/80
⊙ G K	H. J. G. Korff	Plot 159, Juydale (Posbus 2513), Pietersburg	20/6/80
⊙ G L	J. P. le Grange	Posbus 45, Rust Der Winter	24/6/80
⊙ G M	M. J. Zuma	J. T. Surradoe Store, P.O. Impendle	25/6/80
⊙ G N	S. H. Niemand	Palmietfontein, Posbus 68, Ventersdorp	25/6/80
⊙ G O	D. L. Motlhaga	Private Bag X1013, Swartruggens	25/6/80
⊙ G P	C. E. Olivier	Orkney 48, Newboltweg, Orkney	26/6/80
⊙ G Q	D. J. Kgarane	Private Bag 1508, Kuruman	26/6/80
⊙ G R	O. S. Botomile	Room B13, Pomfret	26/6/80
⊙ G S	K. M. Seoposengwe	THARI-IDI Supermarket, P.O. Molelema via Taung Station	27/6/80
⊙ G T	M. T. Monnanyane	Pomfret Asbestos Mine, P.O. Pomfret via Vryburg	27/6/80
⊙ G U	S. J. Moatshe	P.O. Kameelboom 0307, Phokeng	27/6/80
⊙ G V	G. J. F. van der Walt	Posbus 135, Skeerpoort	27/6/80
⊙ G W	H. M. Tshapa	Private Bag 512, Himeville, Natal	30/6/80
⊙ G X	J. M. Ntaose	Private Bag X1013, Swartruggens	30/6/80
⊙ G Y	N. P. Masimona	P.O. Straatsdrift, Groot Marico	30/6/80
⊙ G Z	T. S. Konopi	P.O. Tamposstad	30/6/80

(29 Augustus 1980)/(29 August 1980)

KENNISGEWING 602 VAN 1980

DEPARTEMENT VAN GEMEENSKAPSBOU

STAATSGROND PER OPENBARE VEILING TE KOOP AANGEBIED

Hierby word bekendgemaak dat kragtens die bepalings van die Wet op die Beskikking oor Staatsgrond, 1961 (Wet 48 van 1961), 'n openbare veiling ten opsigte van ondergenoemde Staatsgrond, met verbeterings, gehou sal word soos hieronder uiteengesit:

1. *Eiendom.*—Erf 43, Grabouw, geleë in die administratiewe distrik Caledon, groot 2 974 vierkante meter.
2. *Afslaers.*—Boland Bank Eiendomsdienste en Afslaers (Edms.) Bpk., Telefoon 702, Grabouw.
3. *Plek van veiling.*—Op perseel.
4. *Datum en tyd van veiling.*—5 September 1980, 11h00.

Die eiendom beslaan die terrein van die voormalige Pineview Laerskool vir Kleurlinge wat nou in 'n blanke gebied geleë is.

Voornemende kopers moet die verkoopvoorwaardes so spoedig moontlik bekom en dit bestudeer ten einde vertroud te raak met enige beperkende voorwaarde(s). Dit is ook belangrik om die eiendom voor die veiling te besigtig.

Die verkoopvoorwaardes, asook 'n sketskaart waarop die ligging van die eiendom aangetoon word, is verkrygbaar by die Streekverteenwoordiger, Departement van Gemeenskapsbou, Privaatsak X9024, Kaapstad (Telefoon 21-2370) of van die afslaers hierbo gemeld.

(GD 017-00019)

(29 Augustus 1980)

NOTICE 602 OF 1980

DEPARTMENT OF COMMUNITY DEVELOPMENT

STATE LAND OFFERED FOR SALE BY PUBLIC AUCTION

Notice is hereby given that in terms of the State Land Disposal Act, 1961 (Act 48 of 1961), a public auction of the undermentioned State land, with improvements, will be held as set out below:

1. *Property.*—Erf 43, Grabouw, situated in the Administrative District of Caledon, in extent 2 974 square metres.
2. *Auctioneers.*—Boland Bank Property Services and Auctioneers (Pty) Ltd, Telephone 702, Grabouw.
3. *Place of auction.*—On site.
4. *Date and time of auction.*—5 September 1980 at 11h00.

The property represents the site of the former Pineview Primary School for Coloureds which is now situated in a white area.

Prospective buyers should obtain the conditions of sale as soon as possible and study these to acquaint themselves with any restrictive condition(s). It is also important to inspect the property before the auction.

A sketch showing the situation of the property, together with the conditions of sale, is obtainable from the Regional Representative, Department of Community Development, Private Bag X9024, Cape Town (Telephone 21-2370), or from the auctioneers mentioned above.

(GD 017-00019)

(29 August 1980)

University of Fort Hare
Together in Excellence

KENNISGEWING 603 VAN 1980

DEPARTEMENT VAN MINERAAL- EN ENERGIESAKE

UITHOU VAN GROND VIR DIE DOELEINDES VAN 'N OPENBARE PAD

Die Mynkommissaris vir die myndistrik Johannesburg het 'n strook grond kragtens myntitel gehou, op die plaas Vlakfontein 238 IQ, distrik Roodepoort, myndistrik Johannesburg, provinsie Transvaal, soos getoon op 'n sketskaart waarvan afdrukke onder RMT No. R21/79 in die Mynbriewekantoor, Johannesburg, en in die Kantoor van die Mynkommissaris, Johannesburg, bewaar word, kragtens artikel 179 (1) (b) van die Wet op Mynregte, 1967 (Wet 20 van 1967), vir die doeleindes van 'n openbare pad uitgehou.

(19/5/1/1040)

(29 Augustus 1980)

NOTICE 603 OF 1980

DEPARTMENT OF MINERAL AND ENERGY AFFAIRS

RESERVATION OF LAND FOR THE PURPOSES OF A PUBLIC ROAD

The Mining Commissioner for the Mining District of Johannesburg has, in terms of section 179 (1) (b) of the Mining Rights Act, 1967 (Act 20 of 1967), reserved for the purposes of a public road a strip of land held under mining title, on the farm Vlakfontein 238 IQ, District of Roodepoort, Mining District of Johannesburg, Province of the Transvaal, as shown on a sketch plan, copies of which are filed in the Mining Titles Office, Johannesburg, and in the Office of the Mining Commissioner, Johannesburg, under RMT No. R21/79.

(19/5/1/1040)

(29 August 1980)

KENNISGEWING 604 VAN 1980

DEPARTEMENT VAN MANNEKRAG-BENUTTING

WET OP NYWERHEIDSVERSOENING, 1956

AANSOEK OM REGISTRASIE VAN 'N WERKGEWERSORGANISASIE

Ek, Mattheus Willem Johannes le Roux, Nywerheidsregistrateur, maak ingevolge artikel 4 (2) van bogenoemde Wet hierby bekend dat 'n aansoek om registrasie as 'n werkgewersorganisasie ontvang is van die South African Brick Industry Employers' Association. Besonderhede van die aansoek word in onderstaande tabel verstrek.

NOTICE 604 OF 1980

DEPARTMENT OF MANPOWER UTILISATION

INDUSTRIAL CONCILIATION ACT, 1956

APPLICATION FOR REGISTRATION OF AN EMPLOYERS' ORGANISATION

I, Mattheus Willem Johannes le Roux, Industrial Registrar, do hereby, in terms of section 4 (2) of the above-mentioned Act, give notice that an application for registration as an employers' organisation has been received from the South African Brick Industry Employers' Association.

Enige geregistreerde werkgewersorganisasie wat teen die aansoek beswaar maak, word versoek om binne een maand na die datum van publikasie van hierdie kennisgewing sy beswaar skriftelik by my in te dien, p/a die Departement van Mannekragbenutting, Laboriagebou, hoek van Paul Kruger- en Schoemanstraat, Pretoria (Posadres: Privaatsak X117, Pretoria, 0001).

TABEL

Naam van werkgewersorganisasie.—South African Brick Industry Employers' Association.

Datum waarop aansoek ingedien is.—23 Junie 1980.

Belange en gebied ten opsigte waarvan aansoek gedoen word.—Werkgewers betrokke by die Steenvervaardigingsnywerheid in die Republiek van Suid-Afrika.

"Steenvervaardigingsnywerheid" beteken die bedryf waarin werkgewers en werknemers met mekaar geassosieer is vir die proses of aktiwiteit van die vervaardiging van bakstene van alle soorte en enige ander tipe gebrande produk wat in die bedryf as 'spesiale stene' bekend staan, met inbegrip van teëls, blaaie, hol blokke of enige ander artikels wat soos stene lyk of bedoel is om as stene gebruik te word, waarvan klei 'n bestanddeel is, maar met uitsondering van die Vuurvaste Produktenywerheid.

"Vuurvaste Produktenywerheid" beteken, sonder om die gewone betekenis van die uitdrukking te beperk, die nywerheid waarin werkgewers en hul werknemers met mekaar geassosieer is vir—

(a) die vervaardiging van vuurvaste ware, elektriese porseleinisoleerders of erdepype of -toebehore;

(b) die ekstrahering, myn, winning of bereiding van die grondstowwe wat gebruik word by die vervaardiging van enige van die artikels bedoel in paragraaf (a) hierbo, indien dit gedoen word deur werkgewers wat by sodanige vervaardiging betrokke is.

Posadres van applikant.—Posbus 31156, Braamfontein, Johannesburg, 2017.

Kantooradres van applikant.—Vyfde Verdieping, Datakor House, hoek van Smit- en Debeerstraat, Braamfontein, Johannesburg.

Die aandag word gevestig op onderstaande vereistes van artikel 4 van die Wet:

(a) Die mate waarin 'n beswaarmakende werkgewersorganisasie verteenwoordigend is, word ingevolge subartikel (4) bepaal volgens die feite soos hulle bestaan het op die datum waarop die aansoek ingedien is, en wat die lidmaatskap betref, word alleen lede wat ingevolge artikel 1 (2) van die Wet op voormelde datum volwaardige lede was, in aanmerking geneem.

(b) Die prosedure voorgeskryf by subartikel (2) moet gevolg word in verband met 'n beswaar wat ingedien word.

M. W. J. LE ROUX, Nywerheidsregistrateur.

(29 Augustus 1980)

Particulars of the application are reflected in the subjoined table. Any registered employers' organisation which objects to the application is invited to lodge its objection in writing with me, c/o the Department of Manpower Utilisation, Laboria Buildings, corner of Paul Kruger and Schoeman Streets, Pretoria (Postal address: Private Bag X117, Pretoria, 0001), within one month of the date of publication of this notice.

TABLE

Name of employers' organisation.—South African Brick Industry Employers' Association.

Date on which application was lodged.—23 June 1980.

Interests and area in respect of which application is made.—Employers engaged in the Brick Manufacturing Industry in the Republic of South Africa.

"Brick Manufacturing Industry" means the industry in which employers and employees are associated for the process or activity of manufacturing burnt bricks of every kind and any other type of burnt product known in the industry as 'brick specials', including tiles, slabs, hollow blocks or any other articles resembling bricks or intended to serve the function of bricks, of which clay is a compound, but excluding the Refractories Industry.

"Refractories Industry" means, without limiting the ordinary meaning of the term, the industry in which employers and their employees are associated for the purpose of—

(a) the manufacturing of refractories, electrical procelain insulators or earthenware pipes and fittings;

(b) the extraction, mining, winning or preparation of the raw material used in the manufacture of any of the articles referred to in (a) above, if carried on by employers who are engaged in such manufacture.

Postal address of applicant.—P.O. Box 31156, Braamfontein, 2017.

Office address of applicant.—Fifth Floor, Datakor House, corner of Smit and De Beer Streets, Braamfontein, Johannesburg.

Attention is drawn to the following requirements of section 4 of the Act:

(a) The representativeness of any employers' organisation which objects to the application shall in terms of subsection (4) be determined on the facts as they existed at the date on which the application was lodged and, as far as membership is concerned, only members who were in good standing in terms of section 1 (2) of the Act as at the aforesaid date shall be taken into consideration.

(b) The procedure laid down in subsection (2) must be followed in connection with any objection lodged.

M. W. J. LE ROUX, Industrial Registrar.

(29 August 1980)

KENNISGEWING 609 VAN 1980

DOEANE- EN AKSYNSTARIEFAANSOEKE.—LYS 28/80

Onderstaande aansoeke betreffende die Doeane- en Aksynstarief is deur die Raad van Handel en Nywerheid ontvang. Enige beswaar teen of kommentaar op hierdie vertoë moet binne ses weke na die datum van

NOTICE 609 OF 1980

CUSTOMS AND EXCISE TARIFF APPLICATIONS.—LIST 28/80

The following applications concerning the Customs and Excise Tariff have been received by the Board of Trade and Industries. Any objections to or comments on these representations must be submitted to

hierdie kennisgewing aan die Raad van Handel en Nywerheid, Privaatsak X342, Pretoria, 0001, gerig word.

Verhoging van die reg op:

1. Slangklampe, geheel of gedeeltelik van vlekvrye staal, indeelbaar by tariefsubpos 73.40.64 van 30 persent *ad valorem* tot 30 persent *ad valorem* of 6c elk. [RHN-verw. T5/2/15/2/1 (B68/80).]

Applikant:

Universal Clips (Pty) Ltd, Posbus 58124, Newville, 2114.

2. (1) Glasveselmultifilamentstringe (kontinu) in die vorm van veselstringe, indeelbaar by tariefsubpos 70.20.17, van 20 persent *ad valorem* of 7 000c per 100 kg min 75 persent *ad valorem* tot 25 persent *ad valorem* of 14 000c per 100 kg min 75 persent *ad valorem*;

(2) glasveselmultifilamentstringe na lengte gekerf; snippermat, indeelbaar by tariefsubpos 70.20.25, van 20 persent *ad valorem* of 9 000c per 100 kg min 75 persent *ad valorem* tot 25 persent *ad valorem* of 16 000c per 100 kg min 75 persent *ad valorem*; en

(3) stowwe van glasveselmultifilamentveselstringe geweef, indeelbaar by tariefsubpos 70.20.29, van 20 persent *ad valorem* tot 25 persent *ad valorem*. [RHN-verw. T5/2/13/4/1 (B61/80).]

Applikant:

Fibreglass South Africa (Edms.) Bpk., Privaatsak 30, Springs, 1560.

Verlaging van die reg op:

Elektrostatiese papier, met sinkoksied bestryk, vir fotokopiëring, met 'n waarde vir belastingdoeleindes per 1 000 kg van meer as R265 en met 'n basismassa van minder as 120 g/m², indeelbaar by tariefsubpos 48.07.55.15, van 15 persent *ad valorem* tot vry van reg. [RHN-verw. T5/2/10/2/1 (C45/80).]

Applikant:

S. B. Clement & Kie. (Edms.) Bpk., Posbus 197, Johannesburg, 2000.

Kyk Algemene Kennisgewing 589 van 22 Augustus 1980 vir Lys 27/80.

(29 Augustus 1980)

the Board of Trade and Industries, Private Bag X342, Pretoria, 0001, within six weeks of the date of this notice.

Increase in the duty on:

1. Hose clamps, wholly or partially of stainless steel, classifiable under tariff subheading 73.40.64, from 30 per cent *ad valorem* to 30 per cent *ad valorem* or 6c each. [BTI Ref. T5/2/15/2/1 (B68/80).]

Applicant:

Universal Clips (Pty) Ltd, P.O. Box 58124, Newville, 2114.

2. (1) Glass fibre multifilament strands (continuous), in the form of rovings, classifiable under tariff subheading 70.20.17, from 20 per cent *ad valorem* or 7 000c per 100 kg less 75 per cent *ad valorem* to 25 per cent *ad valorem* or 14 000c per 100 kg less 75 per cent *ad valorem*;

(2) glass fibre multifilament strands chopped to length; chopped strand mat, classifiable under tariff subheading 70.20.25, from 20 per cent *ad valorem* or 9 000c per 100 kg less 75 per cent *ad valorem* to 25 per cent *ad valorem* or 16 000c per 100 kg less 75 per cent *ad valorem*; and

(3) fabrics woven from glass fibre multifilament rovings, classifiable under tariff subheading 70.20.29, from 20 per cent *ad valorem* to 25 per cent *ad valorem*. [BTI Ref. T5/2/13/4/1 (B61/80).]

Applicant:

Fibreglass South Africa (Pty) Ltd, Private Bag 30, Springs, 1560.

Reduction in the duty on:

Electrostatic paper, coated with zinc oxide, for photocopying, with a value for duty purposes per 1 000 kg exceeding R265 and with a basis mass of less than 120 g/m², classifiable under tariff subheading 48.07.55.15, from 15 per cent *ad valorem* to free of duty. [BTI Ref. T5/2/10/2/1 (C45/80).]

Applicant:

S. B. Clement & Co. (Pty) Ltd, P.O. Box 197, Johannesburg, 2000.

For List 27/80 see General Notice 589, dated 22 August 1980.

(29 August 1980)

KENNISGEWING 605 VAN 1980

DEPARTEMENT VAN LANDBOU EN VISSERYE

KENNISGEWING VAN AANSOEK OM GOEDKEURING VIR DIE OPRIGTING VAN 'N VARSPRODUKTEMARK KRAGTENS ARTIKEL 12 (1) VAN DIE WET OP DIE KOMMISSIE VIR VARSPRODUKTEMARKE, 1970 (WET 82 VAN 1970)

Kennis geskied hiermee kragtens artikel 12 (1) van die Wet op die Kommissie vir Varsproduktemarke, 1970 (Wet 82 van 1970), dat die Munisipaliteit, Posbus 96, Louis Trichardt, by die Minister van Landbou en Visserye aansoek gedoen het om goedkeuring vir die oprigting van 'n nuwe varsproduktemark op 'n perseel bekend as Erf 203, geleë te Burgerstraat 105, Louis Trichardt.

Iemand wat vertoë of besware in verband met die bogenoemde aansoek wil rig, moet sodanige vertoë of besware aan die Voorsitter, Kommissie vir Varsproduktemarke, Privaatsak X250, Pretoria, 0001, rig binne

NOTICE 605 OF 1980

DEPARTMENT OF AGRICULTURE AND FISHERIES

NOTICE OF APPLICATION FOR APPROVAL FOR THE ERECTION OF A FRESH PRODUCE MARKET IN TERMS OF SECTION 12 (1) OF THE COMMISSION FOR FRESH PRODUCE MARKETS ACT, 1970 (ACT 82 OF 1970)

It is hereby made known in terms of section 12 (1) of the Commission for Fresh Produce Markets Act, 1970 (Act 82 of 1970), that the Municipality, P.O. Box 96, Louis Trichardt, has applied to the Minister of Agriculture and Fisheries for approval for the erection of a new fresh produce market on a stand known as Erf 203, situated at 105 Burger Street, Louis Trichardt.

Any person intending to submit representations or objections in regard to the above-mentioned application shall forward such representations or objections to the Chairman, Commission for Fresh Produce Markets, Private Bag X250, Pretoria, 0001, within a period

University of Fort Hare

'n tydperk van vier weke vanaf datum van publikasie van hierdie kennisgewing en op die wyse uiteengesit in die regulasies uitgevaardig kragtens die genoemde Wet. Aandag word gevestig op die bepalings van regulasie 20 (6) van die genoemde regulasies wat vereis dat iemand wat besware teen 'n aansoek aan die Minister voorlê, 'n afskrif van die stuk waarin sy besware uiteengesit is, op die betrokke applikant moet bestel.

(29 Augustus 1980)

of four weeks from the date of publication of this notice and in the manner set out in the regulations published under the said Act. Attention is invited to the provisions of regulation 20 (6) of the said regulations which require any person who submits objections to an application to the Minister to serve on the applicant concerned a copy of the document in which his objections are set out.

(29 August 1980)

KENNISGEWING 606 VAN 1980

KENNISGEWING VAN AANSOEK OM GOEDKEURING VIR DIE OPRIGTING VAN 'N NUWE ABATTOIR KRAGTENS ARTIKEL 12 (1) VAN DIE WET OP DIE ABATTOIRBEDRYF, 1976 (WET 54 VAN 1976)

Kennis geskied hiermee kragtens artikel 12 (1) van die Wet op die Abattoirbedryf, 1976 (Wet 54 van 1976), dat mnr. W. Loftie-Eaton, Pk. Hazenjacht, Oudtshoorn, kragtens artikel 11 van genoemde Wet by die Minister van Landbou en Visserye aansoek gedoen het om goedkeuring vir die oprigting van 'n nuwe abattoir te Hazenjacht, Oudtshoorn.

Indien die aansoek toegestaan word, sal die abattoir gebruik word vir die slag van 2 beeste, 4 kalwers, 20 skape en bokke en 2 varke.

Iemand wat vertoë of besware in verband met bogenoemde aansoek wil rig, moet sodanige vertoë of besware aan die Voorsitter, Abattoirkommissie, Privaatsak X250, Pretoria, 0001, rig binne 'n tydperk van 30 dae vanaf datum van publikasie van hierdie kennisgewing en op die wyse uiteengesit in die regulasies kragtens genoemde Wet uitgevaardig.

Aandag word gevestig op die bepalings van regulasie 11 (6) van die genoemde regulasies wat vereis dat iemand wat vertoë of besware teen 'n aansoek aan die Minister voorlê, terselfdertyd 'n afskrif van die stuk waarin sy besware uiteengesit is op die betrokke applikant moet bestel.

H. DE BRUYN, namens Direkteur-generaal van Landbou en Visserye (Landbou-ekonomie en -bemarking: Abattoirkommissie)

L.W.—Die regulasies vereis dat besware onder eed bevestig en in drievoud voorgelê moet word.

(29 Augustus 1980)

NOTICE 606 OF 1980

NOTICE OF APPLICATION FOR APPROVAL FOR THE ERECTION OF A NEW ABATTOIR IN TERMS OF SECTION 12 (1) OF THE ABATTOIR INDUSTRY ACT, 1976 (ACT 54 OF 1976)

It is hereby made known in terms of section 12 (1) of the Abattoir Industry Act, 1976 (Act 54 of 1976), that Mr W. Loftie-Eaton, P.O. Hazenjacht, Oudtshoorn, has in terms of section 11 of the said Act applied to the Minister of Agriculture and Fisheries for approval for the erection of a new abattoir at Hazenjacht, Oudtshoorn.

If the application is granted, the abattoir will be used for slaughtering 2 cattle, 4 calves, 20 sheep and goats and 2 pigs per day.

Any person intending to submit representations or objections in regard to the above-mentioned application shall forward such representations or objections to the Chairman, Abattoir Commission, Private Bag X250, Pretoria, 0001, within a period of 30 days from the date of publication of this notice and in the manner set out in the regulations published under the said Act.

Attention is invited to the provisions of regulation 11 (6) of the said regulations which requires any person who submits objections to an application to the Minister to serve on the applicant concerned a copy of the document in which his objections are set out.

H. DE BRUYN, for Director-General of Agriculture and Fisheries (Agricultural Economics and Marketing: Abattoir Commission)

Note.—The regulations require that objections be affirmed under oath and submitted in triplicate.

(29 August 1980)

KENNISGEWING 607 VAN 1980

DEPARTEMENT VAN VERVOER

WET OP LUGDIENSTE, 1949 (WET 51 VAN 1949), SOOS GEWYSIG

Hierby word ingevolge die bepalings van artikel 5 (a) en (b) van Wet 51 van 1949 en regulasie 5 van die Regulasies vir Burgerlugdienste, 1964, vir algemene inligting bekendgemaak dat die Nasionale Vervoerkommissie die aansoeke waarvan besonderhede in die Bylaes hieronder verskyn, sal aanhoor.

Vertoë ingevolge artikel 6 (1) van Wet 51 van 1949 ter ondersteuning of bestryding van 'n aansoek moet die Direkteur-generaal: Vervoer (Tak Burgerlugvaart), Privaatsak X193, Pretoria, 0001 en die aansoeker binne 21 dae na die datum van publikasie hiervan bereik en daarin moet gemeld word of die persoon of persone wat aldus vertoë rig, van plan is om die verrigtings by te woon of om daar verteenwoordig te word.

NOTICE 607 OF 1980

DEPARTMENT OF TRANSPORT

AIR SERVICES ACT, 1949 (ACT 51 OF 1949), AS AMENDED

Pursuant to the provisions of section 5 (a) and (b) of Act 51 of 1949 and regulation 5 of the Civil Air Services Regulations, 1964, it is hereby notified for general information that the applications, details of which appear in the Schedules hereto, will be heard by the National Transport Commission.

Representations in accordance with section 6 (1) of Act 51 of 1949 in support of, or in opposition to, an application should reach the Director-General: Transport (Civil Aviation Branch), Private Bag X193, Pretoria, 0001 and the applicant within 21 days of the date of publication hereof stating whether the party or parties making such representation intend to be present or represented at the hearing.

Die Kommissie sal reël dat kennis van die datum, tyd en plek van die verrigtings skriftelik gegee word aan die aansoeker en al die persone wat aldus vertoë gerig het en wat verlang om aldus verteenwoordig of teenwoordig te wees.

BYLAE D

LYS VAN AANSOEKE OM DIE VERANDERING OF WYSIGING VAN LISENSIES

(A) Naam en adres van applikant. (B) Naam waaronder die lugdiens geëksploiteer word. (C) Besonderhede betreffende die lisensie en die verandering of wysiging daarvan of die voorwaardes daarvan ten opsigte waarvan aansoek gedoen is.

(A) Air Cape (Edms.) Bpk., Pk. D. F. Malanlughawe, 7525. (B) Air Cape (Edms.) Bpk. (C) Nie-vasgestelde-lugvervoerdienslisensie N378. Onder "Lugvaartuie wat gebruik gaan word" voeg by: "Convair CV580 ZS-KEI en een addisionele Convair CV580-lugvaartuig." Onder "Tariefskaal", voeg by: "Convair CV580 R3,30 tot R3,50 per km of R1 650 per uur".

(A) Air Cape (Edms.) Bpk., Pk. D. F. Malanlughawe, 7525. (B) Air Cape (Edms.) Bpk. (C) Vliegopleidingslugdienslisensie F506. Onder "Lugvaartuie wat gebruik gaan word" voeg by: "Hawker Siddeley HS748 ZS-JAY, Convair CV580 ZS-KEI en een addisionele Convair CV580-lugvaartuig". Onder "Tariefskaal", voeg by: "Hawker Siddeley HS748 tot R1 214,40 per uur en Convair CV580 tot R1 650 per uur".

(A) Air Cape (Edms.) Bpk., Pk. D. F. Malanlughawe, 7525. (B) Air Cape (Edms.) Bpk. (C) Handelslugdienslisensie W436. Onder "Lugvaartuig wat gebruik gaan word" voeg by: "Convair CV580 ZS-KEI en een addisionele Convair CV580-lugvaartuig" Onder "Tariefskaal" voeg by: "Convair CV580 R1 650 per uur".

(A) Anglo American Corp. of S.A. Bpk., Posbus 61587, Marshalltown, 2107. (B) Anglo American Corp. of S.A. Bpk.; (C) Nie-vasgestelde-lugvervoerdienslisensie N376. Onder "Lugvaartuie wat gebruik gaan word" skrap: "Beech B90 ZS-BEN" en voeg by: "Beech 200 ZS-KLO".

(A) Avex Air Charter (Edms.) Bpk., Posbus 3, Randlughawe, 1419. (B) Avex Air Charter (Edms.) Bpk. en Grand Central Air Charter. (C) Nie-vasgestelde-lugvervoerdienslisensie N546. Onder "Lugvaartuie wat gebruik gaan word" voeg by: "Beech 58 ZS-LBT en Piper PA30 ZS-FGR". Onder "Tariefskaal", voeg by: "Beech 58 70c tot 75c per km en Piper PA30 58c tot 60c per km".

(A) Commercial Airways (Edms.) Bpk., Posbus 7015, Bonaero Park, 1622. (B) Commercial Airways (Edms.) Bpk. (C) Vasgestelde-lugvervoerdienslisensie S81. Onder "Tariefskaal" voeg die volgende verminderings by op oggendvlugte vanaf Welkom na Johannesburg en op middagvlugte vanaf Johannesburg na Welkom:

"(A) 50 persent vermindering van die gepubliseerde tariewe van toepassing op—

(1) militêre personeel, onderworpe daaraan dat behoorlike identifikasie getoon word;

(2) huisvrouens wat in Welkom bly (minimum 2), besprekings moet nie meer as 48 uur voor die vertrektyd gedoen word nie.

(B) 20 persent vermindering van die gepubliseerde tariewe van toepassing op alle passasiers wat slegs op 'n retoerbasis van hierdie vlugte gebruik maak, minimum drie passasiers per bespreking.

The Commission will cause notice of the time, date and place of the hearing to be given in writing to the applicant and all parties who have made representations as aforesaid and who desire to be present or represented at the hearing.

SCHEDULE D

LIST OF APPLICATIONS FOR THE ALTERATION, MODIFICATION OR AMENDMENT OF LICENCES

(A) Name and address of applicant. (B) Name under which the air service is operated. (C) Particulars of the licence and of the alteration, modification or amendment thereto or the conditions thereof which has been applied for.

(A) Air Cape (Pty) Ltd, P.O. D. F. Malan Airport, 7525. (B) Air Cape (Pty) Ltd. (C) Non-scheduled Air Transport Service Licence N378. Under "Aircraft to be used", add: "Convair CV580 ZS-KEI and one additional Convair CV580 aircraft". Under "Tariff of charges", add, "Convair CV580 R3,30 to R3,50 per km or R1 650 per hour".

(A) Air Cape (Pty) Ltd, P.O. D. F. Malan Airport, 7525. (B) Air Cape (Pty) Ltd. (C) Flying Training Air Service Licence F506. Under "Aircraft to be used" add: "Hawker Siddeley HS748 ZS-JAY, Convair CV580 ZS-KEI and one additional Convair CV 580 aircraft. Under "Tariff of charges" add: "Hawker Siddeley HS748 up to R1 214,40 per hour and Convair CV580 up to R1 650 per hour".

(A) Air Cape (Pty) Ltd, P.O. D. F. Malan Airport, 7525. (B) Air Cape (Pty) Ltd. (C) Aerial Work Air Service Licence W436. Under "Aircraft to be used", add: "Convair CV580 ZS-KEI and one additional Convair CV580 aircraft". Under "Tariff of charges", add: "Convair CV580 R1 650 per hour".

(A) Anglo American Corp. of S.A. Ltd, P.O. Box 61587, Marshalltown, 2107. (B) Anglo American Corp. of S.A. Ltd. (C) Non-scheduled Air Transport Service Licence N376. Under "Aircraft to be used", delete: "Beech B90 ZS-BEN" and add: "Beech 200 ZS-KLO".

(A) Avex Air Charter (Pty) Ltd, P.O. Box 3, Rand Airport, 1419. (B) Avex Air Charter (Pty) Ltd and Grand Central Air Charter. (C) Non-scheduled Air Transport Service Licence N546. Under "Aircraft to be used", add: "Beech 58 ZS-LBT and Piper PA30 ZS-FGR". Under "Tariff of charges" add: "Beech 58 70c to 75c per km and Piper PA30 58c to 60c per km".

(A) Commercial Airways (Pty) Ltd, P.O. Box 7015, Bonaero Park, 1622. (B) Commercial Airways (Pty) Ltd. (C) Scheduled Air Transport Service Licence S81. Under "Tariff of charges", add the following reductions on morning flights from Welkom to Johannesburg and afternoon flights from Johannesburg to Welkom:

"(A) 50 per cent reduction of the published fare to apply to—

(1) military personnel subject to proper identification being produced;

(2) housewives residing in Welkom (minimum 2), reservations to be made not more than 48 hours prior to departure.

(B) 20 per cent reduction of the published fare to apply to all passengers using these flights on a return basis only, minimum three passengers per reservation.

(C) 15 persent vermindering van die gepubliseerde tariewe van toepassing op alle passasiers wat op 'n retoerbasis van hierdie vlugte gebruik maak.

Snelvrag.—'n 50 persent toeslag op die huidige vragtarief".

(A) Commercial Airways (Edms.) Bpk., Posbus 7015, Bonaero Park, 1622. (B) Commercial Airways (Edms.) Bpk. (C) Vasgestelde-lugvervoerdienslisensie S374. Onder "Tariefskaal" voeg die volgende verminderings by op oggendvlugte vanaf Phalaborwa/Skukuza na Johannesburg en op middagvlugte vanaf Johannesburg na Phalaborwa:

"(A) 50 persent vermindering van die gepubliseerde tariewe van toepassing op—

(1) militêre personeel, onderworpe daaraan dat behoorlike identifikasie getoon word;

(2) huisvrouens wat in Phalaborwa bly (minimum 2), besprekings moet nie meer as 48 uur voor die vertrektyd gedoen word nie.

(B) 20 persent vermindering van die gepubliseerde tariewe van toepassing op alle passasiers wat slegs op 'n retoerbasis van hierdie vlugte gebruik maak, minimum drie passasiers per bespreking.

(C) 15 persent vermindering van die gepubliseerde tariewe van toepassing op alle passasiers wat op 'n retoerbasis van hierdie vlugte gebruik maak.

Snelvrag.—'n 50 persent toeslag op die huidige vragtarief".

(A) Namakwaland Lugdiens (Edms.) Bpk., Posbus 28, Springbok, 8240. (B) Namakwaland Lugdiens (Edms.) Bpk. (C) Vasgestelde-lugvervoerdienslisensie S294. Onder "Roetes wat gevlieg gaan word en frekwensie", skort die volgende op: "Pofadder op versoek op die roete Upington-Kleinzee vyf maal per week. "Onder "Lugvaartuie wat gebruik gaan word", voeg by: "Piper PA31-350 ZS-KKN".

(A) Namakwaland Lugdiens (Edms.) Bpk., Posbus 28, Springbok, 8240. (B) Namakwaland Lugdiens (Edms.) Bpk., (C) Nie-vasgestelde-lugvervoerdienslisensie N520 en Handelslugdienslisensie W956. Onder "Lugvaartuie wat gebruik gaan word", voeg by: "Piper PA31-350 ZS-KKN". Onder "Tariefskaal" voeg by: "Piper PA31-350 85c tot 95c per km".

BYLAE A

LYS VAN AANSOEKE OM DIE TOESTAAN VAN LISENSIES

(A) Naam en adres van applikant. (B) Naam waaronder die lugdiens geëksploiteer gaan word. (C) Besonderhede van lugdiens. (i) Gebiede wat bedien gaan word. (ii) Roete(s) wat bedien gaan word. (iii) Basis(se). (iv) Soort verkeer wat vervoer gaan word. (v) Frekwensie en roosters waarvolgens die diens geëksploiteer gaan word. (vi) Soort opleiding wat verskaf gaan word. (vii) Besonderhede en beskrywing van soort werk wat onderneem gaan word. (viii) Tariefskaal. (D) Lugvaartuie wat gebruik gaan word.

(A) Lanseria Flight School (Edms.) Bpk., Posbus 50576, Randburg, 2124. (B) Lansair. (C) Vasgestelde lugvervoerdiens. (ii) Johannesburg-Durban en retoer. (iii) Lanseria- en Virginiavliegveld. (iv) Vrag vir Adfreight (Edms.) Bpk. (v) Maandae tot Saterdae, een retoervlug daagliks, vertrek Lanseria 05h25 en vertrek Virginia 17h30. (viii) R444 netto per retoervlug. (D) Cessna C210K ZS-IAP, Beech A36 ZS-IHE, Beech 36 ZS-IBL, Beech 95-B55 ZS-PAS en twee Beechcraft Baron B58-lugvaartuie.

(29 Augustus 1980)

(C) 15 per cent reduction of the published fare to apply to all passengers using these flights on a return basis only.

Express freight.—A 50 per cent surcharge added to the current freight rate".

(A) Commercial Airways (Pty) Ltd, P.O. Box 7015, Bonaero Park, 1622. (B) Commercial Airways (Pty) Ltd. (C) Scheduled Air Transport Service Lincence S374. Under "Tariff of charges" add the following reductions on morning flights from Phalaborwa/Skukuza to Johannesburg and afternoon flights from Johannesburg to Phalaborwa:

"(A) 50 per cent reduction of the published fare to apply to—

(1) military personnel subject to proper identification being produced;

(2) housewives residing in Phalaborwa (minimum 2), reservations to be made not more than 48 hours prior to departure.

(B) 20 per cent reduction of the published fare to apply to all passengers using these flights on a return basis only, minimum three passengers per reservation.

(C) 15 per cent reduction of the published fare to apply to all passengers using these flights on a return basis only.

Express freight.—A 50 per cent surcharge added to the current freight rate".

(A) Namakwaland Lugdiens (Pty) Ltd, P.O. Box 28, Springbok, 8240. (B) Namakwaland Lugdiens (Pty) Ltd. (C) Scheduled Air Transport Service Licence S294. Under "Routes to be flown and frequency", suspend: "Pofadder on request on the route Upington—Kleinzee five times per week". Under "Aircraft to be used", add: "Piper PA31-350 ZS-KKN".

(A) Namakwaland Lugdiens (Pty) Ltd, P.O. Box 28, Springbok, 8240. (B) Namakwaland Lugdiens (Pty) Ltd. (C) Non-scheduled Air Transport Service Licence N520 and Aerial Work Air Service Licence W956. Under "Aircraft to be used", add: "Piper PA31-350 ZS-KKN. Under "Tariff of charges", add: "Piper PA31-350 85c to 95c per km".

SCHEDULE A

SCHEDULE OF APPLICATIONS FOR THE GRANT OF LICENCES

(A) Name and address of applicant. (B) Name under which the air service is to be operated. (C) Particulars of air service (i) Area to be served. (ii) Route(s) to be served. (iii) Base(s). (iv) Types and classes of traffic to be conveyed. (v) Frequency and time-tables to which the service will be operated. (vi) Types of training to be provided . (vii) Particulars and description of types of work to be undertaken. (viii) Tariff of charges. (D) Aircraft to be used.

(A) Lanseria Flight School (Pty) Ltd, P.O. Box 50576, Randburg, 2124. (B) Lansair. (C) Scheduled Air Transport Service. (ii) Johannesburg - Durban and return. (iii) Lanseria and Virginia Aerodrome. (iv) Freight for Messrs Adfreight (Pty) Ltd. (v) Mondays to Saturdays, one return flight per day, departing Lanseria 05h25 and departing Virginia 17h30. (viii) R444 nett per return trip. (D) Cessna C210K ZS-IAP, Beech A36 ZS-IHE, Beech 36 ZS-IBL, Beech 95-B55 ZS-PAS and two Beechcraft Baron B58 aircraft.

(29 August 1980)

KENNISGEWING 608 VAN 1980

DEPARTEMENT VAN FINANSIES

RAND BANK BEPERK.—KENNISGEWING INGEVOLGE ARTIKEL 12 (1) VAN DIE BANKWET, 1965

Hierby word vir algemene inligting bekendgemaak dat die registrasie as 'n algemene bank kragtens die Bankwet, 1965, van Rand Bank Beperk met ingang van 1 Julie 1980 ingetrek is.

(29 Augustus 1980)

NOTICE 608 OF 1980

DEPARTMENT OF FINANCE

RAND BANK BEPERK.—NOTICE IN TERMS OF SECTION 12 (1) OF THE BANKS ACT, 1965

It is hereby notified for general information that the registration of Rand Bank Beperk as a general bank in terms of the Banks Act, 1965, was cancelled with effect from 1 July 1980.

(29 August 1980)

KENNISGEWING 610 VAN 1980

DOEANE- EN AKSYNSTARIEFAANSOEKE—LYS 94

A. Ondervermelde aansoeke wat gedurende die tydperk 1 Junie 1980 tot 30 Junie 1980 deur die Raad van Handel en Nywerheid oorweeg is, is nie gesteun nie:

Verhoging van die reg op:

1. Bereide smoeraddisiestowwe.
2. Serpe, sierserpe en stolas. (Lys 41/79; TAK 164/79.)

Verlaging van die reg op:

1. Elektriese motore.
2. Kratte van kunsplastiekstof vir die vervoer van pluimvee.
3. Speelgoedrammelaars. (Lys 6/80; TAK 26/80.)
4. Buis- en pyptoebehore (uitgesonderd sluitmoere) van propileenpolimere of -kopolimere. (Lys 9/80; TAK 43/80.)

Korting van die reg op:

1. Gekleurde garing van akrielvesels, vir die vervaardiging van geweefde poolstowwe. (Lys 10/80; TAK 48/80.)
2. Appelsuur.
3. Weef- en breistowwe vir die vervaardiging van klerasie.
4. Onversierde tafelgerei vir die vervaardiging van versierde tafelgerei.
5. Tweeassig-georiënteerde vinielchloriedpolimere of -kopolimere, in reep, film of foelie, nie drukgevoelig nie. (Lys 6/80; TAK 30/80.)

Algemeen:

1. Uitstel van datum van inwerkingtreding van Fase V-reëlings betreffende erkenning van netto plaaslike inhoud vir motorvoertuie.

2. Wysiging van die definisie van minibusse.

B. Ondervermelde aansoeke is gedurende die tydperk 1 Junie 1980 tot 30 Junie 1980 ingetrek of die applikante het nie daarmee voortgegaan nie:

Verhoging van die reg op:

1. Plastiese tenks en kanne.
2. Ballonne.
3. Dryfaste.
4. Landbou-implemente.
5. Hysbakke.
6. Sekere papierprodukte.

Korting van die reg op:

Kerns van kurk en rubber en vlasdraad vir die vervaardiging van krieket- en hokkieballe.

NOTICE 610 OF 1980

CUSTOMS AND EXCISE TARIFF APPLICATIONS.—LIST 94

A. The following applications considered by the Board of Trade and Industries during the period 1 June 1980 to 30 June 1980, have not been supported:

Increase in the duty on:

1. Prepared lubricating additives.
2. Scarves, mufflers and stoles. (List 41/79; TAC 164/79.)

Reduction in the duty on:

1. Electric motors.
2. Crates of plastic material for the transport of poultry.
3. Toy rattles. (List 6/80; TAC 26/80.)
4. Tube and pipe fittings (excluding locking nuts) of propylene polymers or copolymers. (List 9/80; TAC 43/80.)

Rebate of the duty on:

1. Dyed yarn of acrylic fibres, for the manufacture of woven pile fabrics. (List 10/80; TAC 48/80.)
2. Malic acid.
3. Woven and knitted fabrics for the manufacture of clothing.
4. Undecorated cutlery for the manufacture of decorated cutlery.
5. Biaxially orientated vinyl chloride polymers or copolymers, in strip, film or foil, not pressure-sensitive. (List 6/80; TAC 30/80.)

General:

1. Postponement of the date of implementation of Phase V rules pertaining to recognition of net local content in motor vehicles.

2. Amendment of the definition of minibuses.

B. The following applications have been withdrawn or have not been proceeded with by the applicants, during the period 1 June 1980 to 30 June 1980:

Increase in the duty on:

1. Plastic tanks and cans.
2. Balloons.
3. Driving shafts.
4. Agricultural implements.
5. Lifts.
6. Certain paper products.

Rebate of the duty on:

Cores of cork and rubber and flax thread, for the manufacture of cricket and hockey balls.

University of Fort Hare
Together in Excellence

Intrekking van die kortingfasiliteit ten opsigte van:

Sekere papierprodukte.

C. Die volgende aansoeke om korting van die reg ingevolge item 470.03 is deur die Raad van Handel en Nywerheid aanbeveel gedurende die tydperk 1 Junie 1980 tot 30 Junie 1980:

1. Grondstowwe vir die vervaardiging van vervloeidegassilinders, staal- en plastieksluitings, plastiekfilm en -sakke, vir uitvoer.
2. Chenille- en akrielpoolgaringstowwe vir die vervaardiging van bekledingstowwe.
3. Chroomerts vir die vervaardiging van ferrochroom vir uitvoer.
4. Voerings vir versiersels vir die vervaardiging van leerklerasie vir uitvoer.
5. Sikloheksanoon en DDT vir die vervaardiging van insekdoders vir uitvoer.

Kyk Algemene Kennisgewing 541 van 1 Augustus 1980 vir Lys 93.

(29 Augustus 1980)

Withdrawal of the rebate provision in respect of:

Certain paper products.

C. The following applications for rebate of the duty in terms of item 470.03, considered by the Board of Trade and Industries during the period 1 June 1980 to 30 June 1980, have been supported:

1. Raw materials for the manufacture of liquefied gas cylinders, steel and plastic lockings and plastic film and bags, for export.
2. Chenille and acrylic pile fabrics for the manufacture of furnishing fabrics.
3. Chrome ore for the manufacture of ferro-chrome, for export.
4. Linings and decorations for the manufacture of leather clothing, for export.
5. Cyclohexanone and DDT for the manufacture of insecticides, for export.

For List 93 see General Notice 541, dated 1 August 1980.

(29 August 1980)

Amptelike Publikasies Uitgegee Gedurende Julie 1980

BLOU BOEKE

Verslag van die Departement van Mynwese insluitende Verslae van Die Staatsmyningenieur, Geologiese Opname, en Die Mineraleburo vir die jaar geëindig 31 Desember 1979. (R.P. 24/1980.) Prys, R9,75, buitelands R12,70, posvry.

Jaarverslag van die Departement van Bosbou vir die tydperk geëindig 31 Maart 1979 (R.P. 39/1980.) Prys R2, buitelands R2,60, posvry.

STATISTIEKE VERSLAE

Arbeidstatistieke, Loontariewe, Verdienste en Gemiddelde Ure gewerk in die Druk- en Nuusbladnywerheid, Ingenieursbedryf, Bounywerheid en die Handel, September 1978. Verslag 01-20-06. Prys R2, buitelands R2,50, posvry.

Sensus van Fabriekswese, 1976. Materiaal Aangekoop. Verslag 10-21-34. Prys R2, buitelands R2,50, posvry

Statistieke van Plaaslike Owerhede, 1977–78. Deel I—Oranje Vrystaat. Deel II—Transvaal. Verslag 13-03-13 (1) en (2). Prys R2, buitelands R2,50, posvry.

Statistieke van Afdelingsrade, 1978. Verslag 13-04-14. Prys R2, buitelands R2,50, posvry

DIVERSE PUBLIKASIES

Annale van Geologiese Opname. Band 13, 1979. Prys R2, buitelands R2,50, posvry.

Houtwerkterme (Eng.-Afr.; Afr.-Eng.). Prys R2,60, buitelands R3,40, posvry.

KAARTE

(Prys R2, buitelands R1,25)

1:50 000 *RSA Topografiese Uitgawe*

2230CD—Sibasa. Tweede Uitgawe.

2231AC—Mabiligwe. Tweede Uitgawe.

3326CA—Springmount. Herdruk. Eerste Uitgawe.

1:50 000 *SWA Topografiese Uitgawe*

2214DB—Goanikontes. Tweede Uitgawe (M).

2215BB—Marmorkuppen. Tweede Uitgawe (M).

2215CD—Langer-Heinrighberg. Tweede Uitgawe (M).

1:250 000 *RSA Topokadastrale Uitgawe (M)*

2526—Rustenburg. Vyfde Uitgawe. Landdrosdistrikte, April '80.

2728—Frankfort. Herdruk. Derde Uitgawe. Landdrosdistrikte, Februarie '80.

Official Publications Issued During July 1980

BLUE BOOKS

Report of the Department of Mines including Reports of The Government Mining Engineer, Geological Survey, and The Minerals Bureau for the year ended 31 December 1979. (R.P. 24/1980.) Price R9,75, abroad R12,70, post free.

Annual Report of the Department of Forestry for the period ended 31 March 1979. (R.P. 39/1980.) Price R2, abroad R2,60, post free.

Report of the Committeee of Inquiry into the Finances of Local Authorities in South Africa—Volume 1: Text. (R.P. 50/1980.) Price R7,80, abroad R10,15, post free.

STATISTICAL REPORTS

Labour Statistics, Wage Rates, Earning and Average Hours Worked in the Printing and Newpaper Industry, Engineering Industry, Building Industry and Commerce, September 1978. Report 01-20-06. Price R2, abroad R2,50, post free.

Census of Manufacaturing, 1976. Materials Purchased, Report 10-21-34. Price R2, abroad R2,50, post free.

Local Government Statistics, 1977-78. Part I—Orange Free State. Part II—Transvaal. Report 13-03-13 (1) and (2). Price R2, abroad R2,50, post free.

Divisional Council Statistics, 1978. Report 13-04-14. Price R2, abroad R2,50, post free.

MISCELLANEOUS PUBLICATIONS

Annals of Geological Survey. Volume 13, 1979. Price R2, abroad R2,50, post free.

Woodworking Terms (Eng.-Afr; Afr.-Eng.). Price R2,60, abroad R3,40, post free.

MAPS

(Price R1, abroad R1,25)

1:50 000 *RSA Topographical Series*

2230CD—Sibasa. Second Edition.
2231AC—Mabiligwe. Second Edition.
3326CA—Springmount. Reprint. First Edition.

1:50 000 *SWA Topographical Series*

2214DB—Goanikontes. Second Edition (M).
2215BB—Marmorkuppen. Second Edition (M).
2215CD—Langer-Heinrighberg. Second Edition (M).

1:250 000 *RSA Topo Cadastral Series (M)*

2526—Rustenburg. Fifth Edition, Magisterial Districts, April '80.

2728—Frankfort. Reprint. Third Edition. Magisterial Districts, February '80.

2822—Postmasburg. Herdruk. Tweede Uitgawe. Landdrosdistrikte, April '80.
2828—Harrismith. Herdruk. Tweede Uitgawe. Landdrosdistrikte, April '80.
3030—Port Shepstone. Derde Uitgawe. Landdrosdistrikte, April '80.
3322—Oudtshoorn. Tweede Uitgawe. Landdrosdistrikte, April '80.

1:25 000 *RSA Topografiese Uitgawe*

2726—Kroonstad. Herdruk. Tweede Uitgawe (M).
2828—Harrismith. Herdruk. Tweede Uitgawe (M).

VERKRYGBAAR BY DIE STAATSDRUKKER, PRETORIA EN KAAPSTAD

L.W.—Pryse van alle binnelandse publikasies is onderworpe aan 4 persent verkoopbelasting.

2822—Postmasburg. Reprint. Second Edition. Magisterial Districts, April '80.
2828—Harrismith. Reprint. Second Edition. Magisterial Districts, April '80.
3030—Port Shepstone. Third Edition. Magisterial Districts, April '80.
3322—Oudtshoorn. Second Edition. Magisterial Districts, April '80.

1:250 000 *RSA Topographical Series*

2726—Kroonstad. Reprint. Second Edition (M).
2828—Harrismith. Reprint. Second Edition (M).

AVAILABLE FROM THE GOVERNMENT PRINTER, PRETORIA AND CAPE TOWN

N.B.—Prices of all inland publications are subject to 4 per cent sales tax.

BELANGRIKE AANKONDIGING

Sluitingstye vir Wetlike Kennisgewings en Goewermentkennisgewings

1980

Die sluitingstyd is stiptelik 15h00 op die volgende dae:

2 Oktober, Donderdag vir die uitgawe van Donderdag, 9 Oktober.

11 Desember, Donderdag, vir die uitgawe van Vrydag, 19 Desember.

15 Desember, Maandag, vir die uitgawe van Woensdag, 24 Desember.

19 Desember, Vrydag, vir die uitgawe van Vrydag, 2 Januarie, 1981.

Laat kennisgewings sal in die daaropvolgende uitgawe geplaas word.

IMPORTANT ANNOUNCEMENT

Closing Times for Legal Notices and Government Notices

1980

The closing time is 15h00 sharp on the following days:

2 October, Thursday, for the issue of Thursday, 9 October.

11 December, Thursday, for the issue of Friday, 19 December.

15 December, Monday, for the issue of Wednesday, 24 December.

19 December, Friday, for the issue of Friday, 2 January, 1981.

Late notices will be published in the subsequent issue.

University of Fort Hare
Together in Excellence

MEMOIRS VAN DIE BOTANIESE OPNAME VAN SUID-AFRIKA

Die memoirs is individuele verhandelings, gewoonlik ekologies van aard, maar soms handel dit oor taksonomiese of ekonomiese-plantkundige onderwerpe. Nege-en-dertig nommers is reeds gepubliseer waarvan sommige uit druk is.

Verkrygbaar van die Direkteur, Afdeling Landbouinligting, Privaatsak X144, Pretoria.

Verkoopbelasting moet by binnelandse bestellings ingesluit word.

MEMOIRS OF THE BOTANICAL SURVEY OF SOUTH AFRICA

The memoirs are individual treatises usually of an ecological nature, but sometimes taxonomic or concerned with economic botany. Thirty-nine numbers have been published, some of which are out of print.

Obtainable from the Director, Division of Agricultural Information, Private Bag X144, Pretoria.

Sales tax must accompany inland orders.

STAATSKOERANT

VAN DIE REPUBLIEK VAN SUID-AFRIKA

Intekengeld: Plaaslik—R20 per jaar + 80c verkoopbelasting

Oorsee—R25 per jaar

VOORWAARDES VIR DIE PUBLIKASIE VAN WETLIKE KENNISGEWINGS

Sluitingstye vir die aanname van kennisgewings

1. Die *Staatskoerant* word weekliks op Vrydag gepubliseer en die sluitingstyd vir die aanname van kennisgewings wat op 'n bepaalde Vrydag in die *Staatskoerant* moet verskyn, is 15h00 op die voorafgaande Vrydag. Indien enige Vrydag saamval met 'n openbare vakansiedag, verskyn die *Staatskoerant* op 'n datum en is die sluitingstye vir die aanname van kennisgewings soos van tyd tot tyd in die *Staatskoerant* bepaal.

2. (1) Kopie van kennisgewings wat na sluitingstyd ontvang word, sal oorgehou word vir plasing in die eersvolgende *Staatskoerant*.

(2) Wysigings van of veranderings in die kopie van kennisgewings kan nie onderneem word nie tensy opdragte daarvoor ontvang is voor 12h00 op Dinsdae.

(3) Kopie van kennisgewings vir publikasie kan nie oor die telefoon aangeneem word nie.

(4) In geval van kansellasies sal die terugbetaling van die koste van 'n kennisgewing oorweeg word slegs as die opdrag om te kanselleer op of voor die vasgestelde sluitingstyd soos in paragraaf 1 hierbo aangedui, ontvang is.

Goedkeuring van kennisgewings

3. Kennisgewings, behalwe wetlike kennisgewings, is onderworpe aan die goedkeuring van die Staatsdrukker wat kan weier om enige kennisgewing aan te neem of verder te publiseer.

Vrywaring van die Staatsdrukker teen aanspreeklikheid

4. Die Staatsdrukker aanvaar geen aanspreeklikheid vir—

(1) enige vertraging by die publikasie van 'n kennisgewing of vir die publikasie daarvan op 'n ander datum as dié deur die adverteerder bepaal;

(2) die foutiewe klassifikasie van 'n kennisgewing of die plasing daarvan onder 'n ander afdeling of opskrif as die afdeling of opskrif wat deur die adverteerder aangedui is;

(3) enige redigering, herziening, weglating, tipografiese foute of foute wat weens dowwe of onduidelike kopie mag ontstaan.

Aanspreeklikheid van adverteerder

5. Die adverteerder word aanspreeklik gehou vir enige skadevergoeding en koste wat ontstaan uit enige aksie wat weens die publikasie van 'n kennisgewing teen die Staatsdrukker ingestel mag word.

Kopie

6. Die kopie van kennisgewings moet slegs op een kant van die papier getik wees en mag nie deel van enige begeleidende brief of dokument uitmaak nie.

7. Bo aan die kopie, en weg van die kennisgewing, moet die volgende aangedui word:

(1) Die aard van die kennisgewing;

(2) die opskrif waaronder die kennisgewing geplaas moet word;

(3) die tarief (bv. "Vaste tarief", of "Woordetal-tarief") wat op die kennisgewing van toepassing is, en die koste verbonde aan die plasing daarvan.

8. Alle eiename en familiename moet duidelik leesbaar wees en familiename moet onderstreep of in hoofletters getik word. Indien 'n naam verkeerd gedruk word asgevolg van onduidelike skrif, sal die kennisgewing alleen na betaling van die koste van 'n nuwe plasing weer gepubliseer word.

Betaling van koste

9. Geen kennisgewing word vir publikasie aanvaar nie tensy die koste van die plasing(s) daarvan vooruit betaal is deur middel van ongekanselleerde inkomstesegels.

10. (1) Die koste van 'n kennisgewing moet deur die adverteerder bereken word in ooreenstemming met—

(a) die lys van vaste tariewe; of

(b) indien die vaste tariewe nie van toepassing is nie, die woordetal-tariewe.

GOVERNMENT GAZETTE

OF THE REPUBLIC OF SOUTH AFRICA

Subscription rates: Local—R20 per annum + 80c sales tax

Overseas—R25 per annum

CONDITIONS FOR THE PUBLICATION OF LEGAL NOTICES

Closing times for the acceptance of notices

1. The *Government Gazette* is published every week on Friday, and the closing time for the acceptance of notices which have to appear in the *Government Gazette* on any particular Friday, is 15h00 on the preceding Friday. Should any Friday coincide with a public holiday, the date of publication of the *Government Gazette* and the closing time for the acceptance of notices will be published in the *Government Gazette*, from time to time.

2. (1) Copy of notices received after closing time will be held over for publication in the next *Government Gazette*.

(2) Amendments or changes in copy of notices cannot be undertaken unless instructions are received before 12h00 on Tuesdays.

(3) Copy of notices for publication cannot be accepted over the telephone.

(4) In the case of cancellations a refund of the cost of a notice will be considered only if the instruction to cancel has been received on or before the stipulated closing time as indicated in paragraph 1 above.

Approval of notices

3. Any notices other than legal notices are subject to the approval of the Government Printer, who may refuse acceptance or further publication of any notice.

The Government Printer indemnified against liability

4. The Government Printer will assume no liability in respect of—

(1) any delay in the publication of a notice or publication of such notice on any date other than that stipulated by the advertiser;

(2) erroneous classification of a notice, or the placement of such notice in any section or under any heading other than the section or heading stipulated by the advertiser;

(3) any editing, revision, omission, typographical errors or errors resulting from faint or indistinct copy.

Liability of advertiser

5. Advertisers will be held liable for any compensation and costs arising from any action which may be instituted against the Government Printer in consequence of the publication of any notice.

Copy

6. Copy of notices must be typed on one side of the paper only and may not constitute part of any covering letter or document.

7. At the top of any copy, and set well apart from the notice the following must be stated:

(1) The kind of notice;

(2) the heading under which the notice is to appear;

(3) the rate (e.g. "Fixed tariff rate", or "Word count rate") applicable to the notice, and the cost of publication.

8. All proper names and surnames must be clearly legible, surnames being underlined or typed in capital letters. In the event of a name being incorrectly printed as a result of indistinct writing, the notice will be republished only upon payment of the cost of a new insertion.

Payment of cost

9. No notice will be accepted for publication unless the cost of the insertion(s) is prepaid by way of uncancelled revenue stamps.

10. (1) The cost of a notice must be calculated by the advertiser in accordance with—

(a) the list of fixed tariff rates; or

(b) where the fixed tariff rate does not apply, the word count rate.

(2) In gevalle van twyfel oor die koste verbonde aan die plasing van 'n kennisgewing en in die geval van kopie met meer as 1 600 woorde, moet 'n navraag, vergesel van die betrokke kopie, voor publikasie aan die Advertensie-afdeling, Staatsdrukkery, Privaatsak X85, Pretoria, 0001, gerig word.

11. Ongekanselleerde inkomsteseëls wat die juiste bedrag van die koste van 'n kennisgewing of die totaal van die koste van meerdere kennisgewings verteenwoordig, moet op die kopie geplak word.

12. Oorbetalings op grond van 'n foutiewe berekening van die koste verbonde aan die plasing van 'n kennisgewing deur die adverteerder word nie terugbetaal nie tensy die adverteerder voldoende redes aantoon waarom 'n foutiewe berekening gemaak is. In die geval van onderbetalings sal die verskil van die adverteerder verhaal word en geen plasing sal geskied voordat die volle koste verbonde aan die plasing van die kennisgewing(s) deur middel van ongekanselleerde inkomsteseëls betaal is nie.

13. Die Staatsdrukker behou hom die reg voor om 'n bykomende bedrag te hef in gevalle waar kennisgewings, waarvan die koste in ooreenstemming met die lys van vaste tariewe bereken word, later uitermatig lank blyk te te wees of buitensporige of ingewikkelde tabelwerk bevat.

Bewys van publikasie

14. Eksemplare van die *Staatskoerant* wat nodig mag wees ter bewys van publikasie van 'n kennisgewing kan teen 20c plus 1c verkoopbelasting in die vorm van ongekanselleerde inkomsteseëls (bv. een 10c, een 5c, twee 3c), per eksemplaar van Die Staatsdrukker bestel word. Geen aanspreklikheid word aanvaar vir die versuim om sodanige *Staatskoerant(e)* te pos of vir vertraging in die versending daarvan nie.

LYS VAN VASTE TARIEWE

Gestandaardiseerde kennisgewings	*Tarief per plasing*
	R
Aktes: Verlore dokumente	6,00
Besigheidskennisgewings	5,00
Boedelwettekennisgewings: Vorms J. 297, J 295, J 193 en J 187	2,00
Derdeparty-assuransie-eise om skadevergoeding	2,50
Insolvensiewet- en maatskappywettekennisgewings: J 28, J 29, Vorms 1 tot 9	4,00
L.W.—Vorms 2 en 6—bykomstige verklarings volgens woordetal-tabel, toegevoeg tot die basiese tarief.	
Naamsverandering (vier plasings)	25,00
Naturalisasiekennisgewings (insluitende 'n herdruk vir die adverteerder)	2,00
Onopgeëiste geld—slegs in die buitengewone *Staatskoerant*, sluitingsdatum 15 Januarie (per inskrywing van "naam, adres en bedrag")	0,80
Slagterskennisgewings	5,00
Slumopruimingshofkennisgewings, per perseel	4,00
Verlore lewensversekeringspolisse	2,00
Nie-gestandaardiseerde kennisgewings	
Dranklisensie-kennisgewings (in buitengewone *Staatskoerante*, t.w. Junie/Tvl., November/Kaap, Januarie/O.V.S., April/Natal), per tweetalige aansoek	7,00
Geregtelike en ander openbare verkope:	
Geregtelike verkope	18,00
Openbare veilings, verkope en tenders:	
Tot 75 woorde	6,00
76 tot 250 woorde	15,00
251 tot 350 woorde	23,00
Handelsmerke in Suidwes-Afrika	11,00
Likwidateurs en ander aangesteldes se kennisgewings	7,00
Maatskappykennisgewings:	
Kort kennisgewings: Vergaderings, besluite, aanbod van skikking, omskepping van maatskappy, vrywillige likwidasies, ens.; sluiting van oordrag- of lederegisters en/of verklaring van dividende	11,00
Verklaring van dividende met profytstate, notas ingesluit	25,00
Lang kennisgewings: Oordragte, veranderings met betrekking tot aandele of kapitaal, aflossings, besluite, vrywillige likwidasies	37,00

(2) Where there is any doubt about the cost of publication of a notice, and in the case of copy in excess of 1 600 words, an enquiry, accompanied by the relevant copy, should be addressed to the Advertising Section, Government Printing Works, Private Bag X85, Pretoria, 0001, before publication.

11. Uncancelled revenue stamps representing the correct amount of the cost of publication of a notice, or the total of the cost of publication of more than one notice, must be affixed to the copy.

12. Overpayments resulting from miscalculation on the part of the advertiser of the cost of publication of a notice will not be refunded, unless the advertiser furnishes adequate reasons why such miscalculation occurred. In the event of underpayments, the difference will be recovered from the advertiser, and the notices will not be published until such time as the full cost of such publication has been duly paid in uncancelled revenue stamps.

13. The Government Printer reserves the right to levy an additional charge in cases where notices, the cost of which has been calculated in accordance with the list of fixed tariff rates, are subsequently found to be excessively lengthy or to contain overmuch or complicated tabulation.

Proof of publication

14. Copies of the *Government Gazette* which may be required as proof of publication may be ordered from The Government Printer at 20c per copy plus 1c sales tax, payment to be effected by way of uncancelled revenue stamps (e.g. one 10c, one 5c, two 3c). The Government Printer will assume no liability for any failure to post such *Government Gazette(s)* or for any delay in dispatching it/them.

LIST OF FIXED TARIFF RATES

Standardised notices	*Rate per insertion*
	R
Administration of Estates Acts notices: Forms J. 297, J. 295, J 193 and J 187	2,00
Business notices	5,00
Butchers' notices	5,00
Change of name (four insertions)	25,00
Deeds: Lost documents	6,00
Insolvency Act and Company Acts notices: J 28, J 29, Forms 1 to 9	4,00
N.B.—Forms 2 and 6—additional statements according to word count table, added to the basic tariff.	
Lost life insurance policies	2,00
Naturalisation notices (including a reprint for the advertiser)	2,00
Slum Clearance Court notices, per premises	4,00
Third party insurance claims for compensation	2,50
Unclaimed moneys—only in the extraordinary *Government Gazette*, closing date 15 January (per entry of "name, address and amount")	0,80
Non-standardised notices	
Company notices:	
Short notices: Meetings, resolutions, offer of compromise, conversion of company, voluntary windings-up; closing of transfer or members' registers and/or declaration of dividends	11,00
Declaration of dividend with profit statements, including notes	25,00
Long notices: Transfers, changes with respect to shares or capital, redemptions, resolutions, voluntary liquidations	37,00
Liquidator's and other appointees' notices	7,00
Liquor Licence notices (in extraordinary *Gazettes*, viz. June/Tvl, November/Cape, January/O.F.S., April/Natal), per bilingual application	7,00
Orders of the Court:	
Provisional and final liquidations or sequestrations	14,00
Reductions or changes in capital, mergers, offer of compromise	37,00
Judicial managements, *curator bonis* and similar and extensive rules nisi	37,00
Extension of return date	4,00
Supersessions and discharge of petitions (J 158)	4,00

University of Fort Hare
Together in Excellence

Nie-gestandaardiseerde kennisgewings	*Tarief per plasing* R
Orders van die Hof:	
Voorlopige en finale likwidasies of sekwestrasies...	14,00
Verlagings of veranderings in kapitaal, samesmeltings, aanbod van skikking	37,00
Geregtelike besture, *kurator bonis* en soortgelyke en uitgebreide bevele nisi	37,00
Verlenging van keerdatum	4,00
Tersydestellings en afwysings van petisies (J 158)..	4,00

WOORDETAL-TABEL

Vir algemene kennisgewings wat nie onder bovermelde opskrifte met vaste tariewe ressorteer nie en wat 1 600 of minder woorde beslaan, moet die tabel van woordetal-tariewe gebruik word. Kennisgewings met meer as 1 600 woorde, of waar twyfel bestaan, moet vooraf ingestuur word soos in die Voorwaardes, par. 10 (2), voorgeskryf:

Non-standardised notices	*Rate per insertion* R
Sales in execution and other public sales:	
Sales in execution	18,00
Public auctions, sales and tenders:	
Up to 75 words	6,00
76 to 250 words	15,00
251 to 350 words	23,00
Trade marks in South West Africa	11,00

WORD COUNT TABLE

For general notices which do not belong under above-mentioned headings with fixed tariff rates and which comprise 1 600 or less words, the rates of the word count table must be used. Notices with more than 1 600 words, or where doubt exists, must be sent in before publication as prescribed in par. 10 (2) of the Conditions:

Aantal woorde in kopie Number of words in copy	Een plasing One insertion	Twee plasings Two insertions	Drie plasings Three insertions	Vier plasings Four insertions
	R	R	R	R
-100	7,00	11,00	15,00	19,00
101-150	10,50	16,00	22,00	28,00
151-200	14,00	21,00	29,00	37,00
201-250	17,50	26,00	36,00	46,00
251-300	21,00	31,00	43,00	55,00
301-350	24,50	36,00	50,00	64,00
351-400	28,00	41,00	57,00	73,00
401-450	31,50	46,00	64,00	82,00
451-500	35,00	51,00	71,00	91,00
501-550	38,50	56,00	78,00	100,00
551-600	42,00	61,00	85,00	109,00
601-650	45,50	66,00	92,00	118,00
651-700	49,00	71,00	99,00	127,00
701-750	52,50	76,00	106,00	136,00
751-800	56,00	81,00	113,00	145,00
801-850	59,50	86,00	120,00	154,00
851-900	63,00	91,00	127,00	163,00
901-950	66,50	96,00	134,00	172,00
951-1 000	70,00	101,00	141,00	181,00
1 001-1 300	90,00	131,00	186,00	234,00
1 301-1 600	108,00	161,00	220,00	276,00

AGROANIMALIA

Hierdie publikasie is 'n voortsetting van die Suid-Afrikaanse Tydskrif vir Landbouwetenskap Jaargang 1 tot 11, 1958-1968 en bevat artikels oor Diereproduksie en -tegnologie, Diereversorging en -ekologie, Fisiologie, Genetika en Teelt, Suiwelkunde en Voeding. Vier dele van die tydskrif word per jaar gepubliseer.

Verdienstelike landboukundige bydraes van oorspronklike wetenskaplike navorsing word vir plasing in hierdie tydskrif verwelkom. Voorskrifte vir die opstel van sulke bydraes is verkrygbaar van die Direkteur, Landbou-inligting, Privaatsak X144, Pretoria, aan wie ook alle navrae in verband met die tydskrif gerig moet word.

Die tydskrif is verkrygbaar van bogenoemde adres teen R1,50 per eksemplaar of R6 per jaar, posvry (Buitelands R1,75 per eksemplaar of R7 per jaar).

Verkoopbelasting moet by alle binnelandse bestellings ingesluit word.

AGROANIMALIA

This publication is a continuation of the South African Journal of Agricultural Science Vol. 1 to 11, 1958-1968 and deals with Animal Production and Technology, Livestock Management and Ecology, Physiology, Genetics and Breeding, Dairy Science and Nutrition. Four parts of the journal are published annually.

Contributions of scientific merit on agricultural research are invited for publication in this journal. Directions for the preparation of such contributions are obtainable from the Director, Agricultural Information, Private Bag X144, Pretoria, to whom all communications in connection with the journal should be addressed.

The journal is obtainable from the above-mentioned address at R1,50 per copy or R6 per annum, post free (Other countries R1,75 per copy or R7 per annum).

Sales tax must accompany all inland orders.

University of Pretoria
Tuinhuis in Excellentia

BESIGHEIDSKENNISGEWINGS • BUSINESS NOTICES

VERVREEMDING, VERKOPE, VERANDERINGS VAN VENNOOTSKAP, NAAM, ADRES, ENS.

Kennisgewing geskied hiermee ingevolge die bepalings van artikel 34 (1) van die Insolvensiewet, No 24 van 1936, aan belanghebbende partye en skuldeisers van voorgenome vervreemding van besighede en of klandisie, goedere of eiendom wat 'n deel vorm van besighede, na 'n tydperk van 30 dae vanaf die laaste publikasie van betrokke advertensies, en van aksies, omstandighede of voorwaardes wat op besighede of partye of skuldenaars, soos daarin genoem, betrekking het.

Die inligting word, waar van toepassing, verstrek in die volgorde: (1) Dorpsgebied of distrik, afdeling, county; (2) verkoper, handelaar, vennootskap; (3) besigheid of handel, soort, naam en/of styl, en adres waar gedryf; (4) doel en voorneme (vervreemding, verkoop, oorgawe, verandering of ontbinding van vennootskap, verhuising of adres verandering, naamverandering, kansellasie van verkoop, ens.); voorwaardes, en datum of tydperk indien anders as 30 dae; (5) koper, nuwe besitter en/of eienaar of vennoot, of kontrakterende party; (6) besigheid en adres, indien ander as onder (3); opmerkings, kommentaar; (7) adverteerder en/of agent, adres en datum.

ALIENATION, SALES, CHANGES OF PARTNERSHIP, NAME, ADDRESS, ETC.

Notice is hereby given in terms of section 34 (1) of the Insolvency Act, No. 24 of 1936, to interested parties and creditors of the intention of alienation of businesses and/or goodwill, goods or property forming part of businesses, after a period of 30 days from the last publication of relevant advertisements, and of actions, circumstances or conditions pertaining to businesses or parties or debtors, as mentioned therein.

The information, where applicable, is given in the following order: (1) Township or district, division, county; (2) seller, trader, partnership; (3) business or trade, kind, name and/or style, and the address at which carried on; (4) purpose and intent (alienation, sale abandonment, change or dissolution of partnership, removal or change of address, change of name, cancellation of sale, etc.); conditions, and date or period of time if other than 30 days; (5) purchaser, new proprietor and/or owner or partner, or contracting party; (6) business and address, if other than under (3); notes, comment; (7) advertiser and/or agent, address and date.

TRANSVAAL

ALBERTON.—(2) Douglas Malcolm Glass and Denis Mavrokefalos. (3) Brackenhurst Pharmacy, Brackenhurst Shopping Centre, Atmore Street, Brackenhurst, Alberton. (4) Transferring. (5) Arthur Christos Stavros. (6)—. (7) G. N. Dracatos, Attorney of the Parties, 1-8 Majuba Centre, Voortrekker Road, New Redruth, Alberton.

ALBERTON.—(2) Louis Johan Raubenheimer. (3) Abrasives Bearings and Engineering Supplies, Duplessisstraat 2, Alberton. (4) Ontbinding van vennootskap. (5) Willem Frederick van Tonder. (6)—. (7) A. S. Scholtz, Trust Banksentrum, Voortrekkerweg, New Redruth, Alberton.

BOKSBURG —(2) Nicholas Norman Smukler. (3) Dry cleaning and laundry business, Eight Hour Cleaners (Pty) Ltd, 273a Commissioner Street, Boksburg. (4) Sale. (5) Wessel Hendrik Jansen van Vuuren. (6)—. (7) N. N. Smukler, P.O. Box 5261, Johannesburg, 2000. 1/8/80.

BRAKPAN.—(2) S.A. Moulders and General Engineers (Pty) Ltd. (3) Dalview Foundry, 150 Hastings Avenue, Brakpan. (4) Sale. (5) Allan Edward Armstrong, Derrick Anthony Armstrong, Nicholas Willem Barnard and John Tait. (6)—. (7) Blumenthal Lewis & Associates, P.O. Box 11245, Johannesburg, 2000.

EVANDER.—(2) Louisa Elizabeth Poultney (3) Evander Confectionery Fish & Chips, Stanfordweg, Erf 1393, Evander. (4) Verkoop, 1/9/80. (5) Gregorios Robolakis. (6)—. (7) Els & Parsons, Lastindasentrum, Posbus 59, Evander, 12/8/80.

GERMISTON.—(2) Sotiris Hajiyiannis. (3) Rex Café, 2 Main Road, Fishers Hill, Germiston. (4) Sale. (5) Ah Moe. (6)—. (7) Sotiris Hajiyiannis, Rex Café, 2 Main Road, Fishers Hill, Germiston.

GLENHAZEL.—(2) Colin David Weinstein. (3) The Palace, 19 Northfield Avenue, Glenhazel, Johannesburg. (4) Sale. (5) Gary Jack Legator and Raymond Bloom. (6)—. (7) Goodman-Oshry, P.O. Box 78, Johannesburg, 2000.

JOHANNESBURG.—(2) Jane Missing. (3) Dandy Cover Buttons Company, 311 Arop House, 71 Von Brandis Street, Johannesburg. (4) Sale. (5) Petrus Stephanus Jacobus Pretorius. (6)—. (7) Mabel Hartmann & Rubin Postan, 18e Tenth Street, Maraisburg.

JOHANNESBURG.—(2) Juliekha Mottiar. (3) Satnor's, Shop C103, Grand Bazaar, Oriental Plaza, Fordsburg. (4) Sale. (5) Abdul Samad Goondiwala, Abdul Aziz Mangera, Moosa Mangera. (6)—. (7) N. G. Patel Cachalia & Loonat, P.O. Box 25105, Ferreirastown.

JOHANNESBURG.—(2) Joao Henrique Salgado Goncalves. (3) Henry's Fruit Market, Shop 3, Tower Centre, corner of King Fisher and Raven Streets, Elspark. (4) Sale. (5) Francisco Pestana da Silva. (6)—. (7) E. Salgado, 0842 Sanlamsentrum, Jeppe Street, Johannesburg.

JOHANNESBURG.—(2) T. W. Jandrell (Pta) Ltd. (3) Mayrose Pharmacy, 10 Bradfield Drive, Fairmount, Johannesburg. (4) Sale. (5) David Bloom. (6)—. (7) Blumenthal, Lewis & Associates, P.O Box 11245, Johannesburg, 2000.

JOHANNESBURG.—(2) Steers Steakhouse of Carlton (Pty) Ltd (3) Steers Steakhouse, Carlton Centre, Johannesburg. (4) Sale (5) Panayiotis Bibis and Stylianos Bibis (6)— (7) Aetos Business Brokers, c/o Vaios Kokkoris & Nick Christelis, 11th Floor, Diamond Corner, 68 Eloff Street, Johannesburg

JOHANNESBURG —(2) Henry Sher. (3) Dry cleaners, World Cleaning Boutique, 396 Jan Smuts Avenue, Craighall Park, Johannesburg, and Jan Smuts Avenue, Dunkeld West, Johannesburg. (4) Sale. (5)—. (6) Walter Johnson. (7) M. Chimes, Attorney for the Seller, Fifth Floor, National Board House, 94 Pritchard Street, Johannesburg; and Civin Miller & Schwarz, Attorneys for the Purchaser, First Floor, Trident Buildings, corner of Marshall and Kruis Streets, Johannesburg

JOHANNESBURG.—(2) Paul Antonakis and Irene Leodakis. (3) Take-away food store, Metro-Swiss Take-Away Foods, 72 Market Street, Johannesburg. (4) Sale. (5) Theodosios Joannou Constantinides. (6)—. (7) Suchard, Lagerwey, Gaganakis & Friedman, 2501 Trust Bank Centre, 56 Eloff Street, P.O. Box 6568, Johannesburg.

JOHANNESBURG.—(2) Metro Swiss Confectionery (1952) (Pty) Ltd. (3) Confectionery and take-away food store, Metro Swiss Confectionery, 29 Kerk Street, Johannesburg. (4) Sale. (5) Aida Alexandra Paleologos (6)—. (7) Suchard, Lagerwey, Gaganakis & Friedman, 2501 Trust Bank Centre, 56 Eloff Street, Johannesburg.

JOHANNESBURG.—(2) Samuel Fred Collins. (3) Wilro Park Squash Centre, Stand 1023, Wilro Park Extension. (4) Sale, upon fulfilment of conditions precedent and subject to a reservation of ownership until the purchase consideration has been paid in full. (5) Susan Elizabeth Ladkin and Barbara Harris jointly and severally. (6)— (7) David Hirson & Kallmeyer Incorporated, 12th Floor, Diamond Corner, 68 Eloff Street, P.O. Box 8214, Johannesburg, 11/8/80.

KLERKSDORP.—(2) Jacobus Hendrik van Heerden. (3) Suid-End Kafee, Swartstraat 112, Oudorp, Klerksdorp. (4) Verkoop. (5) Frederik Jacobus Petrus Nel. (6)—. (7) L'ange, De Waal & Freysen, Ferumhuis, Kockstraat 22, Posbus 59, Klerksdorp.

LETABA.—(2) Percy James Binder. (3) Binders Hardware, Erf 26, geleë te Sanlamgebou, Wilgerlaan, Phalaborwa. (4) Verkoop. (5) Vennootskap, Quintin du Preez, Hendrik Johannes de Necker en Leon du Preez. (6) Heqlen Hardware, geleë te Sanlamgebou, Wilgerlaan, Phalaborwa. (7) Wessels, Posbus 805, Phalaborwa, 8/8/80.

MOKERONG.—(2) Resenga Jonas Matsimbi. (3) Liquor store, Mehlareng Bottle Store, farm The Smugglers Union 570, District of Mokerong. (4) Sale. (5) Frans Makwena Mothupi. (6)—. (7) Meyer Pratt & Luyt, P.O. Box 152, Pietersburg, 18/8/80.

PEACEHAVEN.—(2) Johannes Paulus Crafford. (3) Maki Saki Handelaars, Hoepoestraat, Peacehaven. (4) Verkoop. (5) Jacob Pieter van Wyk. (6)—. (7)—.

POTGIETERSRUS.—(2) Lucas Gerhardus Cornelius de Beer. (3) Exotica Bloemiste, Voortrekkerweg 73, Potgietersrus. (4) Verkoop. (5) Wilhelm Jacobus Pieterse. (6)—. (7) Herman Potgieter & Kie., Posbus 999, Potgietersrus.

PRETORIA —(2) Jerica Mary Barta. (3) Public Meat Supply, 40 Blesbok Street, Queenswood Extension 2, Pretoria. (4) Sale. (5) Mervyn Keith Richter. (6)—. (7) G. M. Kraljevich & Co. 712 Van Erkom Buildings, Pretorius Street, Pretoria, 22 8 80

PRETORIA.—(2) Epicure Restaurant (Pty) Ltd. (3) Wine and malt restaurant, trading as Epicure Restaurant, 260 Esselen Street, Sunnyside, Pretoria (4) Sale. (5) David Simon Kantor. (6)—. (7) Getz Behr Ogus & Mendel Cohen, P.O. Box 374, Pretoria.

PRETORIA.—(2) Arnold Basson. (3) Club Athos, Josrail Mansions, Pretoriusstraat 378, Pretoria. (4) Verkoop. (5) Johannes Wilhelm van Aardt. (6)—. (7) A. J. van Wyk & Gooser, Posbus 4625, Pretoria, 0001.

PRETORIA.—(2) Beulah Nel. (3) Beauty Box, Grond Verdieping, Masadagebou, hoek van Paul Kruger- en Proesstraat, Pretoria. (4) Verkoop. (5) Maria Magdalena Jooste. (6)—. (7) Rascher Van Heerden & Griffiths, Posbus 3913, Pretoria.

PRETORIA.—(2) Martina Johanna Benade. (3) Matronell Uitrusters, Charl Cellierssstraat 114, Mountain View, Pretoria (4) Vervreemding. (5) Muriel Erasmus. (6)—. (7) Swanepoel Malan & Kie., Prokureurs vir die Partye, Sewende Verdieping, Arcadiasentrum, Pretoria.

PRETORIA.—(2) Benjamin Bekker. (3) Charmaine Needle Craft, Winkel 28a, Jakarandawinkelsentrum, Pretoria. (4)—. (5) Christina Amelia Kilian, gehuud buite gemeenskap van goed met Verne Kilian met uitsluiting van maritale mag. (6)—. (7) Kemp & De Beer, Posbus 3931, Pretoria.

PRETORIA.—(2) Remeres Bekker. (3) Crochet Nook, Voortrekkerstraat 278a, Gezina, Pretoria. (4) Verkoop. (5) Manfred Trümpelmann. (6)—. (7) Kemp & De Beer, Posbus 3931, Pretoria.

PRIMROSE.—(2) Fernando Santos Marinheiro. (3) Rodos Take Away Foods (Rodos Restaurant), 53a Rietfontein Road, Primrose, Germiston. (4) Sale. (5) Antonio Fernandes Texiera. (6)—. (7) Ivor Trakman, Lang & Partners, Attorneys for the Parties, Seventh Floor, Ingram's Corner, Hillbrow, P.O. Box 7853, Johannesburg.

RANDBURG.—(2) B. J. Hardware (Pty) Ltd. (3) Garden and Home Timbers and Hardware, 185 Hendrik Verwoerd Drive, Randburg. (4) Alienation. (5) Federated Timbers Ltd. (6)—. (7) Webber, Wentzel & Co., Attorney for Seller, 11th Floor, Standard Bank Ceatre, 78 Fox Street, Marshalltown.

ROODEPOORT.—(2) Adelino Ferreira dos Passosa and Jose Felix Camara. (3) City Open Market, 16a President Square, Van Wyk Street, Roodepoort. (4) Dissolution. (5) Jose Felix Camara. (6)—. (7) J. Gus Ackerman, Attorneys for the Parties, 6 Karl Street, Roodepoort.

ROODEPOORT.—(2) Cesar Vieira Cordosa and Joao Vieira Cordosa. (3) Antonio Café & Groceries, 25 Paul Kruger Avenue, Horison, District of Roodepoort. (4) Sale. (5) Antonios Antoniou. (6)—. (7) J. Gus Ackerman, Attorneys for the Parties, 6 Karl Street, Roodepoort.

RUSTENBURG.—(2) Miltiadis Voyiatzis. (3) Algemene handelaar, Swartklip Kafee, te Gedeelte B van die plaas Swartklip KQ. (4) Verhuising. (5) Adelino Pontes, Joao Antonio Pontes and Luis Martins da Silva. (6)—. (7) Van Velden & Duffey, Prokureurs vir Partye, Steenstraat 37, Rustenburg, 18/8/80.

RUSTENBURG.—(2) Demetios Hatzievangelinos en Socrates Davidopoulos. (3) Texas Supermarket, hoek van Plein- en Malanstraat, Rustenburg. (4) Verkoop. (5) Joao Bätista. (6)—. (7) Lamprecht Erlank & Alberts, Eerste Verdieping, Smithstraat 146, Rustenburg.

RUSTENBURG.—(2) Demetrios Hatzievangelinos and Socrates Davidpoulos. (3) Texas Supermarket, corner of Plein and Malan Streets, Rustenburg. (4) Sale. (5) Joao Batista. (6)—. (7) Lamprecht Erlank & Alberts, Eerste Verdieping, Smithstraat 146, Rustenburg, 11/8/80.

RUSTENBURG.—(2) Chaina Ismael Shomang. (3) Busdiens, Bafokeng Bus Service, Koster. (4) Verkoop. (5) Rustenburg Bus Services (Pty) Ltd. (6) Posbus 110, Koster. (7) Jac H. Smit, Leonard & Breytenbach, Eerste Verdieping, Sanlamgebou, Boomstraat, Posbus 75, Rustenburg.

RUSTENBURG.—(2) Sarel Arnoldus Cilliers and Hendrik Adriaan Cilliers. (3) Rustenburg Outfitters, 143b Plein Street, the southern portion marked A of Erf 63, Rustenburg, Registration Division JQ, Tvl. (4) Sale. (5) Hepworths Ltd. (6)—. (7) Van Velden & Duffey, 37 Steen Street, Private Bag 82082, Rustenburg, 0300.

RUSTENBURG.—(2) Yvonne Pedretti and Mario Pedretti (3) Granite Quarries, District of Rustenburg. (4) Sale. 12/7/80. (5) Rustenburg Granite (Pty) Ltd. (6)—. (7) MacRobert, De Villiers & Hitge Inc., P.O. Box 276, Pretoria.

RUSTENBURG.—(2) Rafael de Castro. (3) Entabeni Eating House, Stand 303, Waterval. (4) Sale. (5) Agostinho Abreu da Silva and Jose Manuel Rodrigues Sousa. (6)—. (7) R. I. Michel, 210 International House, 61 Loveday Street, P.O. Box 7602, Johannesburg.

SILVERTON.—(2) Willem Frederik Dreyer. (3) Glasherwinningsagente, E. H. M. Botha Cullet Agent, Joseph Bosmanstraat 510, Silverton, Pretoria. (4) Verkoop, voetstoots. (5) Hendrik Frederik Theunissen en Johannes Petrus Theunissen. (6)—. (7) Couzyn Hertzog & Horak Ingelyf, Prokureurs vir Verkoper, Posbus 125, Pretoria, 0001.

SPRINGS.—(2) Heather Christine Petty. (3) Heidie Day Nursery, Nigel Road, Selection Park, Springs. (4) Alienation (5) Frederick John Reynolds and Patricia Annette Verrall. (6)—. (7) De Jager Kruger & Van Blerk, Attorneys for the Parties, Second Floor, Sanlam Centre, Fourth Street, P.O. Box 835, Springs.

KAAP • CAPE

ALIWAL NORTH.—(2) Hendrik Matthys Cloete. (3) Aliwal North, 25 Smith Street, Aliwal North. (4) Sale. (5) Maureen van der Linde. (6)—. (7) Van Rooy & Van Rooy, 27 Sommerset Street, Aliwal North.

BEAUFORT-WES.—(2) Catharina Barendina Visser, gebore Le Roux. (3) Blomme- en geskenkwinkel, Blommegeur Bloemistewinkel, Sanlamsentrum, Uniestraat, Beaufort-Wes. (4) Verandering van vennootskap. (5) Erena Scholtz en Catharina Barendina Visser, gebore Le Roux. (6)—. (7) Gird & Dercksen, Donkinstraat 136, Posbus 6, Beaufort-Wes, 6970.

BURGERSDORP.—(2) Magdalena Gezina van der Walt. (3) Oasis Kafee, Colignystraat, Burgersdorp. (4) Verkoop. (5) Coenraad Johannes Taljaard. (6)—. (7) Groch & Kie., Prokureurs vir Partye, Posbus 40, Burgersdorp, 5520.

CAPE TOWN.—(2) Zubeida Diedericks. (3) Bee Hive Take Aways. (4) Sale. (5) Caldis Mavrothalassitis. (6) Corner of 41 Albert Street and London Road, Salt River. (7) Lionel G. Murray & Co., Attorneys for Seller, 214 French Bank Buildings, 4 Church Square, Cape Town.

DESPATCH.—(2) Jacobus Wilhelmus le Roux. (3) Wilhelm le Roux Motors, Despatch, en Sams Café (Moby Restaurant), Hoofstraat 25, Despatch. (4) Verkoop. (5) Abraham Stefanus Bredenhann. (6)—. (7) Le Roux Le Roux & Maree, Posbus 16, Uitenhage, 18/8/80.

GEORGE.—(2) Johannes Antonie Joubert. (3) Handelaar in tweedehandse meubels, Victoria Furniture Mart en Teekamer, Courtnaystraat, George. (4) Verkoop. (5) Willem de Later. (6)—. (7) MacRobert De Villiers & Hitge Ing., Posbus 276, Standard Bankgebou 513, Kerkplein, Pretoria.

GEORGE.—(2) Drukkor (Edms.) Bpk. (3) Kleinhandel skryfbehoeftes handelaars, George Skryfbehoeftes, Sanlamsentrum, Meadstraat, George. (4) Verkoop. (5) Cyril Dean Bentall en Thomas Douglas Murfin. (6)—. (7) Heunis Botha & Wiggett, Yorkstraat 117, George.

KING WILLIAM'S TOWN.—(2) Manuel Dias Ascencao. (3) Café. (4) Sale. (5) T. W. C. (Pty) Ltd. (6)—. (7) Hutton & Cook, Attorneys for the Parties, P.O. Box 44, King William's Town, 5600.

MOSSELBAAI.—(2) Louis Albrecht Fourie. (3) Algemene handelaar, handelaar in minerale waters, patente medisyne en vars produkte, Kamper's Winkel, Die Bakke, Mosselbaai. (4) Verkoop. (5) Maria Magdalena Terblanche, Esmé Stofberg en Susarah Maria Muller. (6)—. (7) Pauw, Rauch, Gertenbach & Moolman, Cuffstraat 3, Posbus 3, Mosselbaai, 13/8/80.

MOSSELBAAI.—(2) Leslie Barnes Lloyd. (3) Kafee, algemene handelaar en gashandelaar, Lloyd's Mini Market, Dagamastraat, Da Nova, Mosselbaai. (4) Verkoop. (5) Pieter Scorgie en Rudolf Marthinus Britz. (6)—. (7) Pauw, Rauch, Gertenbach & Moolman, Cuffstraat 3, Posbus 3, Mosselbaai, 13/8/80.

PAARL.—(2) Thomas Casparus Robberts. (3) Sorento Flowers, Sorento, Joostenbergvlakte. (4) Verkoop en ontbinding van vennootskap. (5) George Frederik van Tonder. (6)—. (7) Marais Pienaar & Vennote, Posbus 4793, Kaapstad.

POSTMASBURG.—(2) Jacobus Petrus van der Merwe. (3) Postmasburg Duikkloppers, Dolomietstraat 3, Postmasburg. (4) Verkoping van besigheid. (5) Johannes Alwyn Havenga. (6)—. (7) Jan Fourie & Kie., Posbus 400, Postmasburg.

RIEBEEK KASTEEL.—(2) Roelof Johannes du Plooy. (3) Algemene handelaarsbesigheid, Erka Supermark, Piet Retiefstraat 5, Riebeek Kasteel. (4) Verkoop. (5) Johannes Petrus Louw Horn. (6)—. (7) Pierre du Plessis & Mostert, Veritasgebou, Piet Retiefstraat 13, Malmesbury, 5/8/80.

SALDANHA.—(2) Willem Daniel Pretorius Laubscher. (3) Melkery, Saldanha Melkery, Hoofweg, Saldanha. (4) Verkoop, 1/8/80. (5) Ralph George Robinson. (6)—. (7) Swemmer & Levin, Prokureurs vir die Partye, hoek van Hoofweg en Kerkstraat, Vredenburg.

VREDENDAL.—(2) C. Smit. (3) Uitspan Kafee, Voortrekkerstraat, Vredendal, 8160. (4) Verkoop. (5) J. H. Arp. (6)—. (7) I. G. Downing & Kie., Prokureurs vir die Partye, Trustbanksentrum, Voortrekkerstraat, Vredendal, 8160.

VREDENDAL.—(2) Richard McDonald Arp. (3) Play-a-Tune, Trustbanksentrum, Voortrekkerstraat, Vredendal, 8160. (4) Verkoop (5) Hendrina Cecilia Jacobs. (6)—. (7) I. G. Downing & Kie., Prokureur vir die Partye, Trustbanksentrum, Voortrekkerstraat, Vredendal 8160.

VRYBURG.—(2) Renier Johannes Kriel. (3) H. K. Spares and Accessories, Markstraat 203, Vryburg. (4) Verkoop. (5) Jeanette Lombaard. (6)— (7) Kotzé & Low, Posbus 123, Vryburg, 11/8/80.

NATAL

AMANZIMTOTI.—(2) Leslie William Nurse. (3) Mr. Rump Steakhouse, 73 Beach Road, Amanzimtoti. (4) Alienation. (5) Douglas Stuart Jenkins. (6)—. (7) Ditz Incorporated, Seventh Floor, Nedbank Centre, Durban Club Place, Durban.

DURBAN.—(2) Lesmic (Pty) Ltd. (3) Fleur 445, 445 Manning Road, Durban. (4) Sale. (5) Margaret Rachel du Preez and Marie-Nella Rushton. (6)—. (7) Berkowitz Kirkel Cohen Incorporated, 15th Floor, Durban Bay House, 333 Smith Street, Durban.

DURBAN.—(2) Lawrence William Smart. (3) Shazam Boutique, Shop 5, Belmont Arcade, corner of West Street and Marine Parade, Durban. (4) Sale. (5) Abel Aronowitz. (6)—. (7) Havemann & Flockemann, Suite 1518, 320 West Street, Durban.

DURBAN.—(2)—. (3) Clover Dairy Shop, 499 Sydney Road, Durban. (4) Change of ownership from A. S. Nunes. (5) Fernando Teodoro Rodriques. (6)—. (7) Marcus Lewis Robinson & Goulding, Seventh Floor, General Buildings, 47 Field Street, Durban.

HILLCREST.—(2) J. Cardinaal. (3) Hillcrest Dry Cleaners (Pty) Ltd. (4) Sale. (5) T. Labuschagne. (6)—. (7) T. Labuschagne, P.O. Box 754, Hillcrest.

MTONYANENI.—(2) Rodney Bristow. (3) General dealer, Biyela Store, Reserve 11, District of Mtonyaneni. (4) Sale. (5) Peter Adam Shange. (6)—. (7) Wynne & Wynne, Attorneys, P.O. Box 1, Eshowe, 3815.

OSIZWENI.—(2) Kgoshi Simon Sithole. (3) Inkosingiphile Restaurant, Erf 2769, Osizweni. (4) Vervreemding. (5) Mahambayedwa Amos Sithole. (6)—. (7) De Jager Butler & Steyn, Scottstraat 50, Newcastle, 22/8/80.

OSIZWENI.—(2) Kgoshi Simon Sithole. (3) Thembilhele Supermark, Erf 4175, Osizweni. (4) Vervreemding. (5) Simon Magudulela. (6)—. (7) De Jager, Butler & Steyn, Scottstraat 50, Newcastle.

PINETOWN.—(2) N. S. Wauchope and B. H. Jacklin. (3) The Percolator, Nichols Arcade, Hill Street, Pinetown. (4) Sale, 4/10/80. (5) Gerard Graaff and Barbara Anne Paxton. (6)—. (7) King & Fuller, P.O. Box 270, Pinetown, 3600.

RAMSGATE.—(2) Duro Gayo Primic. (3) Ramsgate Butchery, Shop 3, Lot 64, Ramsgate. (4) Sale. (5) William Laurence Rush and Edmund Fred Norman Atkinson. (6)—. (7) Crickmay & Kirsch, Attorneys for the Parties, Oribi Centre, Marine Drive, Margate.

ORANJE-VRYSTAAT • ORANGE FREE STATE

BETHULIE.—(2) Stephanus Francois Marais. (3) A. B. C. Stores, Jim Fouchélaan 52, Bethulie. (4) Verkoop tesame met meubilement. (5) Hermanus Gerhardus de Kock Voster. (6)—. (7) Schoeman & Smith, Joubertstraat 46, Bethulie, 22/8/80.

BOTHAVILLE.—(2) Harris Aletras. (3) Astoria Café and Supermarket, Wag-'n-Bietjie Plein, Meyerhof, Bothaville. (4) Verkoop. (5) Virgilio Heliodoro da Silva en Manuel Ferreinrinha da Silva. (6) Food-O-Rama. (7) Strauss & Botes, Presidentstraat 44, Posbus 11, Bothaville, 13/8/80.

PARYS.—(2) Costas Botoulas. (3) Georges Café. (4) Verkoop. (5) Agistinho Nunnes de Viveiros. (6) Grensstraat 81, Parys, O.V.S. (7) De Necker, Booysen & Van Zyl, Zanzagebou 823, Proesstraat 116, Pretoria.

WELKOM.—(2) Manuel Agrela Teixeira. (3) Café keeper, general dealer, fishmonger, patent medicines, Sunrise Café, 11a Tugela Circle, St Helena, Welkom. (4) Alienation. (5) Magdalena Elizabeth Bisbikos. (6)—. (7) Mostert, Fourie & Co., Attorneys for Parties, First Floor, Essex House, Elizabeth Street, P.O. Box 1518, Welkom, 9460.

WELKOM.—(2) Gabriella Berti en Rosa Sorrentino. (3) Thabang Café, Erf 7841, 187 J. Power Road, Extension 12, Welkom. (4) Sale. (5) Thabong Eating House (Pty) Ltd. (6)—. (7) Wessels & Smith, P.O. Box 721, Welkom.

MAATSKAPPYKENNISGEWINGS • COMPANY NOTICES

TRANSVAAL

KIELOY (PTY) LTD • Extraordinary general meeting.—Notice is hereby given that an extraordinary general meeting of shareholders of Kieloy (Pty) Ltd, will be held at the registered office of the Company on 1/8/80, at 11h00 for the purpose of considering and, if deemed fit, passing with or without modification, the following resolution as a special resolution in the manner required by the Companies Act, 1973:

1. That the Company be and is hereby wound up voluntarily by distributing the assets of the Company to the members in proportion to their respective rights, after payment in full of all creditors' claims.
2. That such winding up be a members' voluntary winding up in accordance with the provisions of the Companies Act, 1973.
3. That Isaac Emanuel Sacks be and is hereby appointed liquidator for the aforegoing purposes, and that such liquidator be vested with all the powers and authority conferred and allowed by the Companies Act, 1973.
4. That the liquidator of the Company shall not be required to furnish security in terms of section 375 (1) of the Companies Act, 1973, for the due performance of his duties.
5. That in terms of section 422 (1) of the Companies Act, 1973, the liquidator of the Company be authorised, when the Company has been wound up and dissolved, to dispose of the books and papers of the Company, by destroying them or procuring their destruction.
6. That the remuneration of the liquidator be fixed at the sum of R250.

The effects of and reasons for passing the above resolution are to place the Company in members' voluntary liquidation and distribute the assets to the shareholders in proportion to their interest in the Company.

A member entitled to attend and vote is entitled to appoint a proxy who need not be a member, to attend and speak and, on a poll, vote in his stead. On behalf of the Board. Registered office: Third Floor, Elkam, Pretoria Street (corner Claim Street), Hillbrow, Johannesburg, 1/8/80.

LTA LTD (Inc. in RSA) • 10 Per Cent Cumulative Redeemable Preference Shares.—Notice is hereby given that for the purpose of the draw to determine the holders of 5 197 10 per cent cumulative redeemable preference shares to be redeemed on 31/12/80, the registers in respect of the preference shares will be closed from 12/9/80 to 25/9/80, both days inclusive. By Order of the Board.—J. G. Anderson, Secretary. Registered office: Sixth Floor, Everite House, 20 De Korte Street, Braamfontein, Johannesburg, 2001. Transfer secretaries: Union Provident Trust South Africa Ltd, 17th Floor, Bank of Lisbon Buildings, 37 Sauer Street, Johannesburg, 2001, 28/8/80.

OK BAZAARS (1929) LTD • Notice to preference shareholders.—Notice is hereby given that the undermentioned half-yearly dividends have today been declared payable on 30/9/80, in the currency of the Republic of South Africa, to all holders of the respective classes of shares registered in the books of the Company at the close of business on 5/9/80.

6 Per Cent First Cumulative Preference Shares, Dividend 92—3 per cent.

5 Per Cent Third Cumulative Preference Shares, Dividend 74—2½ per cent.

The usual Non-Resident Shareholders' Tax of 15 per cent will be deducted where applicable.

The registers of members will be closed in Johannesburg and London from 6/9/80 to 14/9/80, both days inclusive, for the purpose of the payment of the above dividends. By Order of the Board.—J. B. Parnall, Secretary.

DELSWA LTD (Inc. in RSA) • Declaration of dividend.—Notice is hereby given that Ordinary Dividend 62 of 25c per share has been declared payable to holders registered in the books of the Company at the close of business on 22/8/80.

For this purpose, the ordinary share register of the Company will be closed from 23/8/80 to 31/8/80, both days inclusive.

Dividends warrants will be posted to shareholders on or about 12/9/80.

Non-Resident Shareholders' Tax will be deducted from the dividends of shareholders whose registered addresses are outside the Republic of South Africa. By Order of the Board.—A. Laird-Smith, Director.

OVENSTONE INVESTMENTS LTD (Geink. in RSA) • Verklaring van dividende.—Kennis geskied hiermee dat die volgende dividende verklaar is:

Voorkeuraandeel	Div. No.	Tydperk	Sent per aandeel	Laaste registrasiedatum	Sluiting van oordragboeke en lederegister	Tjeks word gepos
8,5 persent deels omskepbare aflosbare kumulatiewe.....	11	Ses maande tot 31/8/80	4,25	29/8/80	1/9/80–7/9/80	26/9/80
11 persent omskepbare aflosbare kumulatiewe.....	11	Ses maande tot 31/8/80	5,50	29/8/80	1/9/80–7/9/80	26/9/80

Nie-inwonende Aandeelhouersbelasting teen 15 persent sal, waar toepaslik, van dividende afgetrek word. In opdrag van die Raad.—F. J. Jenkings, Groepsekretaris. Geregistreerde kantoor: St. Georgestraat 8, Kaapstad, 8001. Oordragsekretarisse: Fraser Street Registrars (Pty) Ltd, Agste Verdieping, Sagesentrum, Fraserstraat 10, Johannesburg, 2001, 15/8/80.

OVENSTONE INVESTMENTS LTD (Inc. in RSA) • Declaration of dividends.—Notice is hereby given that the following dividends have been declared:

Preference share	Div. No	Period	Cents per share	Final registration date	Closing of transfer books and register of members	Cheques posted
8,5 per cent partly conv. red. cum...	11	Six months ended 31/8/80	4,25	29/8/80	1/9/80–7/9/80	26/9/80
11 per cent conv. red. cum.....	11	Six months ended 31/8/80	5,50	29/8/80	1/9/80–7/9/80	26/9/80

Non-Resident Shareholders' Tax at the rate of 15 per cent will, where applicable, be deducted from dividends. By Order of the Board.—F. J. Jenkings, Group Secretary. Registered office: 8 St George's Street, Cape Town, 8001. Transfer secretaries: Fraser Street Registrars (Pty) Ltd, Eighth Floor, Sage Centre, 10 Fraser Street, Johannesburg, 2001, 15/8/80.

JAFF-DELSWA INVESTMENTS LTD (Inc. in RSA) • Declaration of dividend.—Notice is hereby given that Ordinary Dividend 22 of 6c per share has been declared payable to holders registered in the books of the Company at the close of business on 22/8/80.

For this purpose the ordinary share register of the Company will be closed from 23/8/80 to 31/8/80, both days inclusive.

Dividend warrants will be posted to shareholders on or about 12/9/80.

Non-Resident Shareholders' Tax will be deducted from the dividends of shareholders whose registered addresses are outside the Republic of South Africa. By Order of the Board.—A. Laird-Smith, Director.

EGOLI CONSOLIDATED MINES LTD (formerly Skye Ltd) (Inc. in RSA) • Declaration of dividend.—Notice is hereby given that Ordinary Dividend 10 of 7c per share has been declared payable to holders registered in the books of the Company at the close of business on 3/10/80.

For this purpose, the ordinary share register of the Company will be closed from 4/10/80 to 12/10/80, both days inclusive.

Dividend warrants will be posted to shareholders on or about 24/10/80.

Non-Resident Shareholders' Tax will be deducted from the dividends of shareholders whose registered addresses are outside the Republic of South Africa. By Order of the Board.—M. B. Michaels, Secretary.

CADBURY SCHWEPPES (SOUTH AFRICA) LTD (Inc in RSA) • Declaration of dividend.—Notice is hereby given that Ordinary Dividend 21 of 10c per share has been declared payable to holders registered in the books of the Company at the close of business on 29/8/80.

For this purpose, the ordinary share register of the Company will be closed from 30/8/80 to 7/9/80, both days inclusive.

Dividend warrants will be posted to shareholders on or about 29/9/80.

Non-Resident Shareholders' Tax will be deducted from the dividends of shareholders whose registered addresses are outside the Republic of South Africa. By Order of the Board.—P. G. Stewart, Director.

LTA LTD (Inc. in RSA) • 3 000 000 13,5 Per Cent Secured (First mortgage) Debentures, 1997/1999.—Notice is hereby given that for the purpose of determining the holding of the Company's 3 000 000 13,5 per cent secured (first mortgage) debentures 1997/1999 entitled to receive interest payment 9 for the period 1/4/80 to 30/9/80, both days inclusive, the registers in respect of the debentures will be closed from 13/9/80 to 30/9/80, both days inclusive.—J. G. Anderson, Secretary. Registered office: Sixth Floor, Everite House, 20 De Korte Street, Braamfontein, Johannesburg, 2001. Transfer secretaries: Union Provident Trust South Africa Ltd, 17th Floor, Bank of Lisbon Buildings, 37 Sauer Street, Johannesburg, 2001.

ABERDARE CABLES AFRICA LTD (Inc. in RSA) • Declaration of dividend.—Notice is hereby given that Ordinary Dividend 39 of 10c per share has been declared payable to holders registered in the books of the Company at the close of business on 29/8/80.

For this purpose, the ordinary share register of the Company will be closed from 30/8/80 to 7/9/80, both days inclusive.

Dividend warrants will be posted to shareholders on or about 30/9/80.

Non-Resident Shareholders' Tax will be deducted from the dividends of shareholders whose registered addresses are outside the Republic of South Africa. By Order of the Board.—C. S. Hurter, Group Secretary.

VOGELSTRUISBULT METAL HOLDINGS LTD • Closing of register of members.—In connection with the declaration of Dividend 67 the register of members will be closed from 23/8/80 to 30/8/80, inclusive. By Order of the Board.—Gold Fields of South Africa Ltd, Secretaries, per D. C. Dykes, Gold Fields Buildings, 75 Fox Street, Johannesburg, 2001, 22/8/80.

ALEX LIPWORTH LTD (Inc. in RSA) • Declaration of Ordinary Dividend 68.—Notice is hereby given that an interim dividend of 4c per share (1979—3c) has been declared payable to shareholders registered in the books of the Company at the close of business on 12/9/80.

Dividend warrants will be posted on or about 3/11/80.

In terms of the Income Tax Act, 1962, as amended, a Non-Resident Shareholders' Tax of 15 per cent will be deducted from dividends payable to shareholders whose registered addresses are outside the Republic. By Order of the Board.—A. D. Baxter, Secretary. Transfer secretaries: Financial Administrators (Pty) Ltd, Fifth Floor, Atkinson House, 24 Eloff Street, Johannesburg, 2001, 19/8/80.

THE STANDARD BRASS, IRON AND STEEL FOUNDRIES LTD • Closing of register.—Notice is hereby given that the register of ordinary members of the Company will be closed from 16/8/80 to 22/8/80, both dates inclusive,

University of Pretoria
Together in Excellence

in order to determine the ordinary shareholders qualifying for Interim Ordinary Dividend 127 of 15c per share payable on 16/10/80 to shareholders registered at the close of business on 15/8/80. By Order of the Board.—F. Bleazard, Secretary, Portion 25, Kleinfontein 67 I.R., Main Reef Road, Benoni, 31/7/80.

STEWARTS & LLOYDS OF SOUTH AFRICA LTD • Unsecured Debentures.—Interest Payment:

	Payment of interest on				
	1982–91	1984–98	1995–99	Series A 1986–95	Series B 1986–95
Annual interest rate.....	% 10,25	% 9,2	% 10,5	% 11,75	% 11,25

Interest period.—1/4/80 to 30/9/80.

Closing of registers.—13/9/80 to 30/9/80, both dates inclusive.

Non-Resident Tax on interest.—Will be deducted where applicable.

Date of payment.—30/9/80.

By Order of the Board.—E. A. Johnson, Group Secretary. Registered office: 36 Simmonds Southway, Park Central, Johannesburg, 2001. Transfer secretaries: Rand Registrars Ltd, Devonshire House, Jorissen Street, P.O. Box 31719, Braamfontein, 2017, 4/7/80.

DARLING & HODGSON LTD • In connection with the payment of a dividend, the transfer books and registers of members of the Company will be closed from 22/9/80 to 26/9/80, inclusive.—Union Corporation Ltd, Secretaries, per D. G. Fanshawe, Union Corporation Buildings, 74/78 Marshall Street, Johannesburg, 2001; P.O. Box 61357, Marshalltown, 2107, 14/8/80.

WESTERN DEEP LEVELS LTD • Closing of registers.—Notice is hereby given that for the purpose of the general meeting of members of Western Deep Levels Ltd, to be held at 44 Main Street, Johannesburg, on Friday, 12/9/80, at 09h30, the transfer registers and registers of members will be closed from 5/9/80 to 12/9/80, both days inclusive. By Order of the Board.—Anglo American Corporation of South Africa Ltd, Secretaries, per C. R. Bull, Divisional Secretary. Registered office: 44 Main Street, Johannesburg, 2001. Transfer secretaries: Consolidated Share Registrars Ltd, 62 Marshall Street, Johannesburg, 2001, 29/8/80.

HEWSON CONSTRUCTION LTD (formerly Okana Stores Ltd) • Notice is hereby given that an extraordinary general meeting of shareholders of Okana Stores Ltd, will be held on 22/9/80, Fifth Floor, De Korte House, 46 De Korte Street, Braamfontein, at 08h00 for the purpose of considering and, if deemed fit, passing with or without modification, the following resolution as a special resolution in the manner required by the Companies Act, 1973:

That the Company be converted from a public company to a private company and that Table B of Schedule 1 to the Act be accepted as the articles of the Company.

The effects of and reasons for passing the above resolution are to simplify the administration of the Company.

A member entitled to attend and vote is entitled to appoint a proxy, who need not be a member, to attend and speak and, at a poll vote in his stead. On behalf of the Board.

GRANDBEACON INVESTMENTS (PTY) LTD • Voluntary winding up [In terms of section 356 (2) (b) of the Companies Act, 1973].—At a general meeting of the Company on 18/8/80 the following resolutions were passed:

As special resolution that—

(1) the Company be wound up voluntarily;

(2) the books and papers of the Company and of the liquidator are to be destroyed six months after the date of confirmation by the Master of the Supreme Court of the Final Account.

As ordinary resolutions that—

(1) Alastair J. Bruce is appointed liquidator;

(2) the liquidator shall not be required to furnish any security in connection with the winding up of the Company;

(3) the remuneration of the liquidator is fixed at R1 500;

(4) the liquidator of the Company shall have all the powers conferred by the Companies Act, 1973, including, specifically, those mentioned in section 386 (4) of that Act.

Alastair J. Bruce, Liquidator, Ninth and 10th Floors, St Mary's Buildings, 85 Eloff Street, Johannesburg, 2001.

METAL BOX SUID-AFRIKA BPK. • Sluiting van lederegisters:

5 *Persent Aflosbare Kumulatiewe Voorkeureffekte*

Kennis geskied hiermee dat 'n Voorkeurdividend 65 van 5c gelykstaande aan 2½ persent op die pariwaarde vir die halfjaar geëindig 30/9/80, betaal sal word aan houers van Aflosbare Kumulatiewe Voorkeureffekte van 5 persent wat met die sluiting van sake op Vrydag, 12/9/80, in die boeke van die Maatskappy geregistreer is.

Die dividend word betaal in die geldeenheid van die Republiek van Suid-Afrika en tjeks ter betaling daarvan sal op 26/9/80 versend word.

Die oordragboeke en lederegister sal gesluit wees op Saterdag, 13/9/80 tot en met Saterdag, 27/9/80.

7 *Persent Ongewaarborgde Leningseffekte*, 1974/1983

Kennis geskied hiermee dat in ooreenstemming met die voorwaardes van uitreiking van bogenoemde leningseffekte, die lederegister gesluit sal wees op Woensdag, 17/9/80, tot en met Dinsdag, 30/9/80, om die halfjaarlikse rente bereken tot 30/9/80 te betaal aan effektehouers wat met die sluiting van sake op Dinsdag, 16/9/80, geregistreer is.

13 *Persent Nie-omskepbare Ongewaarborgde Leningseffekte*, 1986/1990

Kennis geskied hiermee dat in ooreenstemming met die voorwaardes van uitreiking van bogenoemde leningseffekte, die lederegister gesluit sal wees op Saterdag, 13/9/80, tot en met Saterdag, 27/9/80, om die rente bereken tot 30/9/80, te betaal aan effektehouers wat met die sluiting van sake op Vrydag, 12/9/80, geregistreer is.

13 *Persent Ten Volle Omskepbare Ongewaarborgde Leningseffekte* 1986/1990

Kennis geskied hiermee dat in ooreenstemming met die voorwaardes van uitreiking van bogenoemde leningseffekte, die lederegister gesluit sal wees op Saterdag, 13/9/80, tot en met Saterdag, 27/9/80, om die rente bereken tot 30/9/80, te betaal aan effektehouers wat met die sluiting van sake op Vrydag, 12/9/80, geregistreer is.

10,5c *Dividend, Omskepbare Aflosbare Kumulatiewe Voorkeuraandele van 10c elk*

Kennis geskied hiermee dat 'n Voorkeurdividend 6 van 5,25c vir die halfjaar geëindig 30/9/80, betaal sal word aan die houers van 10,5c dividend, omskepbare aflosbare kumulatiewe voorkeuraandele van 10c elk, wat met die sluiting van sake op Vrydag, 12/9/80, in die boeke van die Maatskappy geregistreer is.

Die dividend word betaal in die geldeenheid van die Republiek van Suid-Afrika en tjeks ter betaling daarvan sal op 26/9/80 versend word.

Die oordragboeke en lederegister sal gesluit wees op Saterdag, 13/9/80, tot en met Saterdag, 27/9/80.

10,65 *Persent Onversekerde Obligasies* 1995/1999

Kennis geskied hiermee dat in ooreenstemming met die voorwaardes van uitreiking van bogenoemde leningseffekte, die lederegister gesluit sal wees op Saterdag, 13/9/80, tot en met Saterdag, 27/9/80, om die rente bereken tot 30/9/80, te betaal aan effektehouers wat met die sluiting van sake op Vrydag, 12/9/80, geregistreer is.

In opdrag van die Raad.—J. D. McMurchie, Sekretaris. Geregistreerde kantoor: Metal Box Sentrum, Owlstraat 25, Auckland Park, Johannesburg, 2092. Oordragsekretarisse: AFC Security Registrars Bpk., Oordragkantoor, Grondverdieping, Unicorn-huis, Marshallstraat 70 (hoek van Sauer), Johannesburg, 2001.

University of Fort Hare
Together in Excellence

METAL BOX SOUTH AFRICA LTD • Closing of the registers:

5 Per Cent Redeemable Cumulative Preference Stock

Notice is hereby given that a Preference Dividend 65 of 5c equivalent to 2½ per cent on the par value, for the half year ended 30/9/80, will be paid to the holders of the 5 Per Cent Redeemable Cumulative Preference Stock registered in the books of the Company as at the close of business on Friday, 12/9/80.

The dividend is payable in the currency of the Republic of South Africa and cheques in payment thereof will be despatched on 26/9/80.

The transfer books and register of members will be closed from Saturday, 13/9/80, to Saturday, 27/9/80, both days inclusive.

7 Per Cent Unsecured Loan Stock 1974/1983

Notice is hereby given that in accordance with the conditions of issue of the above-mentioned loan stock, the register of stockholders will be closed from Wednesday, 17/9/80, to Tuesday, 30/9/80, both days inclusive, for the purpose of effecting payment of half-yearly interest to 30/9/80, to stockholders registered at the close of business on Tuesday, 16/9/80.

13 Per Cent Non-Convertible Unsecured Loan Stock 1986/1990

Notice is hereby given that in accordance with the conditions of issue of the above-mentioned loan stock, the register of stockholders will be closed from Saturday, 13/9/80, to Saturday, 27/9/80, both days inclusive, for the purpose of effecting payment of interest due to 30/9/80, to stockholders registered at the close of business on Friday, 12/9/80.

13 Per Cent Fully Convertible Unsecured Loan Stock 1986/1990

Notice is hereby given that in accordance with the conditions of issue of the above-mentioned loan stock, the register of stockholders will be closed from Saturday, 13/9/80, to Saturday, 27/9/80, both days inclusive, for the purpose of effecting payment of interest due to 30/9/80, to stockholders registered at he close of business on Friday, 12/9/80,

10,5c Dividend, Convertible Redeemable Cumulative Preference Shares of 10c each

Notice is hereby given that a Preference Dividend 6 of 5,25c for the half year ended 30/9/80, will be paid to the holders of the 10,5c Dividend, Convertible Redeemable Cumulative Preference Shares of 10c each registered in the books of the Company as at the close of business, on Friday, 12/9/80.

The dividend is payable in the currency of the Republic of South Africa and cheques in payment thereof will be despatched on 26/9/80.

The transfer books and register of members will be closed from Saturday, 13/9/80, to Saturday, 27/9/80, both days inclusive.

10,65 Per Cent Unsecured Debentures 1995/1999

Notice is hereby given that in accordance with the conditions of issue of the above-mentioned loan stock, the register of stockholders will be closed from Saturday, 13/9/80, to Saturday, 27/9/80, both days inclusive, for the purpose of effecting payment of interest due to 30/9/80, to stockholders registered at the close of business on Friday, 12/9/80.

By Order of the Board.— J. D. McMurchie, Secretary. Registered office: Metal Box Centre, 25 Owl Street, Auckland Park, Johannesburg, 2092. Transfer secretaries: AFC Security Registrars Ltd, Transfer Office, Ground Floor, Unicorn House, 70 Marshall Street (corner of Sauer), Johannesburg, 2001.

PRIORITY INVESTMENT TRUST LTD (No. 60/4226) • Conversion of company.—Notice is hereby given that the above Company intends to convert itself from a public company having a share capital to a private company having a share capital, and that a special resolution to effect such conversion will be proposed at a general meeting of the Company to be held on Tuesday 23/9/80, at 09h00 at Litorn House, 69 Commissioner Street, Johannesburg.

MOPF AND MEPF LTD (No. C1984/06) • Conversion of company.—Notice is hereby given that the above Company intends to convert itself from a public company having a share capital to a private company having a share capital, and that a special resolution to effect such conversion will be proposed at a general meeting of the Company to be held on Tuesday 23/9/80, at 09h00 at Litorn House, 69 Commissioner Street, Johannesburg.

JOHANNESBURG TEA AND COFFEE CO. (PTY) LTD • Voluntary winding up [In terms of section 356 (2) (b) of the Companies Act, 1973].—At a general meeting of the Company on 25/7/80 the following resolutions were passed:

As special resolutions that—

(1) the Company be wound up voluntarily;

(2) the books and papers of the Company and of the liquidator are to be destroyed six months after the date of confirmation by the Master of the Supreme Court of the Final Account.

As ordinary resolutions that—

(1) Alastair J. Bruce is appointed liquidator;

(2) the liquidator shall not be required to furnish any security in connection with the winding up of the Company;

(3) the remuneration of the liquidator is fixed at R500;

(4) the liquidator of the Company shall have all the powers conferred by the Companies Act, 1973 including, specifically, those mentioned in section 386 (4) of that Act.

Alastair J. Bruce, Liquidator, Ninth and 10th Floors, St Mary's Buildings, 85 Eloff Street, Johannesburg.

ANGLO-TRANSVAAL CONSOLIDATED INVESTMENT COMPANY LTD • Closing of transfer books and registers.—Notice is hereby given that dividends having been declared payable to members registered in the books of the undermentioned companies at the close of business on 12/9/80, the transfer books and registers of members will be closed from 13/9/80 to 19/9/80, both days inclusive:

Name of Company:

Associated Manganese Mines of S.A. Ltd.
The T. W. Beckett and Company Ltd.
Claude Neon Lights (S.A.) Ltd.
Consolidated Glass Works Ltd.
Globe Engineering Works Ltd.
Irvin & Johnson Ltd.
National Bolts Ltd.
Shipwrights and Engineers Holdings Ltd.
South Atlantic Corporation Ltd.
Steelmetals Ltd.

By Order of the Boards.—Anglo-Transvaal Consolidated Investment Company Ltd. Secretaries/Transfer Secretaries, per E. G. D. Gordon, Johannesburg.

GRINAKER HOLDINGS LTD • Fixed rate cumulative redeemable preference shares.—Closing of transfer books: Notice is hereby given that the preference share transfer books and register of members will be closed from 13/9/80 to 30/9/80, both days inclusive, for the purpose of payment of Dividend 4. By Order of the Board.—E. C. W. Vels, Secretary. Transfer secretaries: Union Provident Trust South Africa Ltd, 17th Floor, 37 Sauer Street, P.O. Box 2322, Johannesburg, 2000, 25/8/80.

TIGER OATS AND NATIONAL MILLING COMPANY LTD (Inc. in RSA) • Declaration of Interim Dividend 71, Ordinary shares.—Notice is hereby given that the transfer books and registers of members will be closed from 20/9/80 to 3/10/80, both days inclusive. By Order of the Board.—H. Yudelowitz, Secretary. Registered office: 15th Floor, Wesbank House, 222 Smit Street, Johannesburg, 2001. Transfer secretaries: Consolidated Share Registrars Ltd, Libertas, 62 Marshall Street, Johannesburg, 2001, 19/8/80.

S.P.O.T.T. (PTY) LTD • Be pleased to take notice that the above Company has by special resolution dated 18/8/80, been wound up in a members' voluntary winding up in terms of section 350 of the said Act.—Bowman, Gilfillan & Blacklock Inc., Attorneys for the Company, P.O. Box 1397, Johannesburg, 2000.

University of Pretoria

KAAP • CAPE

TRUWORTHS • 6 Per Cent Unsecured Loan Stock (1969/83), 7 Per Cent Unsecured Loan Stock (1971/90).—Notice is hereby given that half-yearly interest on the above Unsecured Loan Stock will be paid to stockholders registered in the books of the Company as at close of business on 12/9/80.

The stock register books and register of stockholders will be closed from 15/9/80 to 30/9/80, both dates inclusive.

Cheque will be posted to stockholders on 26/9/80.—D. J. Opie, Secretary/Director. Registered office: 47 Keerom Street, Cape Town, 8000. Receiving and Certification office: Hill Samuel Registrars SA Ltd, Corner House, 63 Fox Street, Johannesburg, 2001, 12/9/80.

LENTE INVESTMENTS (PTY) LTD • Voluntary winding up.—Notice is hereby given pursuant to section 356 (2) (b) of the Companies Act, that at a general meeting of shareholders of the Company held on 4/8/80, the shareholders passed special resolutions to wind up the Company by a members' voluntary winding up.—Jacob Zeller, c/o Penkin Zeller & Karro, Chartered Accountants (SA), Second Floor, Atkinson House, 47 Strand Street, Cape Town, was appointed liquidator and is exempted from furnishing security.

SEGALS PHARMACY (PTY) LTD (in vol. liqu.) • Voluntarily winding up.—Notice is hereby given pursuant to section 356 (2) (b) of the Companies Act, 1973, that at a general meeting of shareholders of the Company held on 8/8/80 the shareholders passed a special resolution to wind up the Company by way of members' voluntary winding up and that Abraham Benzion Hymie Margolis of Cape Town be appointed liquidator of the Company. The liquidator was exempt from furnishing security.

KENNEMERLAND (PTY) LTD (in vol. liqu.) • Voluntarily winding up.—Notice is hereby given pursuant to section 356 (2) (b) of the Companies Act, 1973, that at a general meeting of shareholders of the Company held on 8/8/80 the shareholders passed a special resolution to wind up the Company by way of members' voluntary winding up and that Abraham Benzion Hymie Margolis of Cape Town be appointed liquidator of the Company. The liquidator was exempt from furnishing security.

BELGORSEE BELEGGINGS (EDMS.) BPK. • Voluntary winding up.—Notice is hereby given that in terms of section 356 (2) (b) of the Companies Act, 1973, as amended, that at a meeting of members of the above Company, held on 15/8/80, the following resolutions were passed:

1. That the Company be wound up voluntarily in terms of section 349 (b) of the Companies Act, 1973.
2. That Henry Benjamin Beckerleg, Chartered Accountant (S.A.), P.O. Box 1127, Cape Town, be and is hereby appointed liquidator in terms of section 350 (1) of the Companies Act, 1973, and that, subject to the subsequent confirmation of his appointment by the Master of the Supreme Court, in terms of section 369 (1) of the Companies Act, 1973, he be invested with all powers and authority conferred and allowed by the said Act.
3. That the liquidator be and is hereby exempted from the necessity of furnishing security to the Master of the Supreme Court in terms of section 375 (1) of the Companies Act, 1973.
4. That the remuneration of the liquidator be and is hereby fixed at R390.
5. That the liquidator be authorised to destroy the books and records of the Company after confirmation of the Final Liquidation Account.

V. Kenney, Director.

ARK ROCK PROPERTY (PTY) LTD • Voluntary winding up.—Notice is hereby given pursuant to section 356 (2) (b) of the Companies Act, No. 61 of 1973, that at an extraordinary general meeting of the shareholders of the Company held on 15/8/80, it was unanimously decided that the Company be wound up voluntarily and that it was resolved as follows:

That the Company be wound up voluntarily by its members in terms of section 349 (b) of the Companies Act, and that Ronald Stephen van Rhyn be nominated as liquidator of the Company and that his remuneration be fixed at R350 and that Ronald Stephen van Rhyn shall be absolved from lodging security for the performance of his duties as liquidator.

Templeton, Strong & Vignazia, 815 Atkinson House, 47 Strand Street, Cape Town, 20/8/80.

NATAL

CONHILL STORES (PTY) LTD (No. 58/2007) • Members' voluntary liquidation.—Notice is hereby given in terms of section 356 (2) of the Companies Act, No. 61 of 1973, that Conhill Stores (Pty) Ltd, (No 58/2007), has applied for a members' voluntary liquidation.

Durban, 13/8/80.—P. M. Kroeger, 20th Floor, Trust Bank Centre, 475 Smith Street, Durban, 4001.

THE TONGAAT GROUP LTD • 6,5 Per Cent Redeemable Cumulative Preference Shares.—Notice is hereby given that Dividend 34 on preference shares has been declared payable on 30/9/80 at the rate of 6,5 per cent per annum (equivalent to 3,25c per share), for the period 1/4/80 to 30/9/80, to preference shareholders registered in the books of the Company at the close of business on 12/9/80.

To effect payment of this dividend, the relevant transfer books and register of members will be closed from 13/9/80 to 21/9/80, both dates inclusive.

Non-Resident Shareholders' Tax of 15 per cent will be deducted where applicable. By Order of the Board.—D. G. Aitken, Group Secretary, Maidstone, Natal.

McCARTHY GROUP LTD • Final Ordinary Dividend 79.—Notice is hereby given that the Final Ordinary Dividend 79 at the rate of 13c per share has been declared by the directors for the year ended 30/6/80 payable to holders of ordinary shares registered in the books of the Company at the close of business on 3/10/80.

The dividend is declared payable in the currency of the Republic of South Africa and dividend warrants will be posted in South Africa to all shareholders on or about 24/10/80.

For the purpose of establishing the shareholders entitled to participate in this dividend, the transfer register of the Company will be closed from 4/10/80 to 10/10/80, both days inclusive. Shareholders are advised that any change of address and/or dividend instructions must be lodged with the transfer secretaries on or before 3/10/80 at their address given below.

In terms of the Income Tax Act, 1962, as amended, the Non-Resident Shareholders' Tax of 15 per cent will be deducted by the Company from dividends payable to shareholders whose addresses in the register of members are outside the Republic of South Africa. By Order of the Board.—B. J. Clouston, F.C.I.S., Secretary. Registered office: 1101 Nedbank Circle, 577 Point Road, Durban, 4001. Transfer secretaries and Certification office: Hill Samuel Registrars (S.A.) Ltd, P.O. Box 62318, Marshalltown, 2107.

BARE CHEEKED BABBLER (PTY) LTD • Voluntarily winding up [Pursuant to section 356 (2) (b) of the Companies Act, 1973].—Notice is hereby given that on 25/7/80 at a general meeting of shareholders of the above Company held in Durban, the following special resolution was passed:

That the Company be wound up voluntarily as a members' voluntary winding up and that Julien Anthony Newmark Blebuyck be appointed liquidator, in terms of section 350 (1) of the Companies Act.

The following ordinary resolution was also passed:

That the liquidator shall not be required to furnish security to the Master of the Supreme Court, in terms of section 375 (1) of the Companies Act.

PATERSON AND AITKEN (PTY) LTD • Notice is hereby given that the following resolutions were passed pursuant to section 349 of the Companies Act, 1973, as amended, at a general meeting of shareholders of the Company held for that purpose at Durban on 15/8/80:

1. That the Company be wound up voluntarily and that R. K. Baker be and is hereby appointed liquidator of the Company.
2. That the liquidator's remuneration be fixed at R250.
3. That in terms of section 375 (1) of the Companies Act, as amended, it shall not be necessary for the liquidator to furnish security for the due performance of his duties.

J. C. Paterson, Director, 20/8/80.

ORANJE-VRYSTAAT • ORANGE FREE STATE

SPATCHCOCK INVESTMENTS (PTY) LTD (No 68/12938) • Members' voluntary liquidation.—Notice is hereby given, pursuant to section 356 (2) of the Companies Act, 1973, that at a general meeting of the shareholders of the above Company held on 14/8/80 at Bloemfontein, the following special resolution was passed:

1. That the Company be voluntarily placed in liquidation by its members in terms of section 349 (b) of the Companies Act, 1973.

2. That Peter Edgar Nussey be and is hereby liquidator for the purpose of this liquidation and that he be exempted from furnishing security in terms of section 350 of the Companies Act, 1973.

3. That the liquidator's fee be fixed at R300.

4. That the liquidator be and is hereby empowered in terms of section 422 (1) (b) of the Companies Act, 1973, to destroy all books and records of the Company immediately after the liquidation has been approved by the Master of the Supreme Court and the registrar of companies.

P. E. Nussey, P.O. Box 178, Bloemfontein, 9300, 18/8/80.

LIKWIDATEURS EN ANDER AANGESTELDES SE KENNISGEWINGS
LIQUIDATORS' AND OTHER APPOINTEES' NOTICES

Kennisgewings deur likwidateurs en ander aangesteldes soos eksekuteurs, geregtelike bestuurders, trustees, kurators of voogde, van aanstellings, vergaderings, rekeninge, eise, verlof, vrystellings, ens.

Notices by liquidators and other appointees such as executors, judicial managers, trustees, curators or tutors, of appointments, meetings, accounts, claims, leave of absence, releases, etc.

TRANSVAAL

COMMERCIAL GUARANTEES LTD, under provisional judicial management (No. T930/80).—Notice is hereby given that a meeting of creditors will be held in the boardroom of Deloitte Haskins & Sells Trust (Pty) Ltd, Third Floor, Aegis Buildings, 34 Loveday Street, Johannesburg, at 09h00, on Wednesday, 10/9/80, to consider and, if thought fit, adopt a resolution in terms of section 435 (1) (a) of the Companies Act, No. 61 of 1973.—M. L. de Villiers & N. Bowman, Joint Provisional Judicial Managers.

EERSTE VAN RIEBEECK BELEGGINGS (EDMS.) BPK., in vrywillige likwidasie.—Kennis geskied hiermee ingevolge die bepalings van artikel 356 van die Maatskappywet, No. 61 van 1973, dat Eerste Van Riebeeck Beleggings (Edms.) Bpk., op 'n vergadering van lede gehou op 5/8/80, besluit het om kragtens die bepalings van artikel 349 van die genoemde wet in vrywillige likwidasie te gaan, en dat J. T. Crouse, Posbus 49, Silverton, benoem is as likwidateur.

OTTO GUNTHER KUBE (No. C442/63).—Notice is hereby given that the trustee in the above estate, Ralph Lanesman, has ceased practising and the Master has agreed to him resigning as trustee in the estate as he now resides overseas.

As a result of his resignation the Master is taking immediate steps to appoint Laerence Wilfred Hummel, as provisional trustee, and will take steps to convene a meeting for the election of a final trustee.—Goldberg, Kuhn & Lanesman, P.O. Box 241, Pretoria.

SIEDIEDOU (EDMS.) BPK., in voluntary liquidation.—Notice is hereby given that in terms of section 375 (5) (b) of the Companies Act 1973, as amended, that on 21/7/80, I was appointed liquidator of the above Company by the Master of te Supreme Court.—W. W. Schoch, P.O. Box 1594, Vereeniging, 1930.

KAAP • CAPE

A & M VENTURES (PTY) LTD, in voluntary liquidation.—I, Herbert Arthur Farrow, c/o Pim Whiteley & Close, 10th Floor, The Strand Tower, 66 Strand Street, Cape Town, 8001, do hereby give notice in terms of section 375 (5) (b) of the Companies Act, 1973 of 29/7/80, I was appointed liquidator of A & M Ventures (Pty) Ltd, in a voluntary winding up by the Master of the Supreme Court of South Africa (Cape of Good Hope Provincial Division).—Pim Whiteley & Close, 10th Floor, The Strand Tower, 66 Strand Street, Cape Town, 8001, 15/8/80.

ECONO AGENTS AND DISTRIBUTORS (PTY) LTD, in liquidation (No. C245/80).—Notice is hereby given in terms of section 375 (5) (b) of the Companies Act, No. 61 of 1973, that the undersigned has been appointed liquidator by the Master of the Supreme Court.—c/o H. Nathan Trust (Pty) Ltd, P.O. Box 4205, Cape Town.

GARTHDEAN (PTY) LTD.—Notice is hereby given that the following resolution were passed pursuant to section 349 of the Companies Act, as amended, at a general meeting of shareholders of the Company, held for that purpose at 501 BP Centre, Thibault Square, Cape Town on 15/8/80.

That the Company be wound up voluntary as a members' voluntary winding up.

That George Howells Copeland, be and is hereby appointed liquidator of the Company pursuant to section 360 (1) of the Companies Act, as amended, for the purpose of such winding up, and that his remuneration be fixed and that he be exempted from furnishing securit[illegible] of section 375 of the said Act.—Joshua Cohen, Dire[illegible]

GLENVALE HOUSE (PTY) LTD, in voluntary liquidation.—I, the undersigned, hereby give notice that by certificate dated 31/7/80, I have been appointed liquidator of the above Company by the Master of the Supreme Court.—David Frobisher Waters, P.O. Box 1913, Cape Town, 8000.

AKTES VERLORE DOKUMENTE

Kennis word hiermee gegee ingevolge die Registrasie van Aktes Wet, No. 47 van 1937, dat die volgende applikante voornemens is om aansoek te doen vir 'n gesertifiseerde afskrif van die genoemde dokument(e) en dat alle persone wat teen die uitreiking van sodanige afskrif beswaar maak hiermee versoek word om dit skriftelik in te dien by die Registrateur van Aktes te genoemde plek, binne drie weke (en binne vyf weke in die geval van S.W.A.) na die laaste publikasie van die kennisgewing.

Die inligting word verstrek in die volgorde: (1) Dorpsgebied of distrik, afdeling, county; (2) onderhawige dokument(e) met nommer en datum; (3) gegee deur; (4) ten gunste van (en in gevalle van verbande, die bedrag); (5) ten opsigte van sekere (beskrywing, nommer, ligging, grootte en/of verdere besonderhede); (6) applikant en/of sy agent met adres en datum; (7) besware in te dien by die Registrateur van Aktes te.

DEEDS LOST DOCUMENTS

Notice is hereby given in terms of the Deeds Registry Act, No. 47 of 1937, that the following applicants intend applying for a certified copy of the document(s) named and that all persons having objection to the issue of such copy are hereby requested to lodge the same in writing with the Registrar of Deeds at the place mentioned within three weeks (and within five weeks in the case of S.W.A.) from the last publication of the notice.

The information is given in the following order: (1) Township or district, division, county; (2) document(s) in question with number and date; (3) passed by; (4) in favour of (and in case of bonds, the amount); (5) in respect of certain (description, number, situation, extent and/or further details); (6) applicant and/or his agent with address and date; (7) objections to be lodged with the Registrar of Deeds at.

TRANSVAAL

AMERSFOORT.—(2) Transportakte 29871/54. (3) Boedel wyle Anna Catharina Retief. (4) Thomas John Carbis, gebore op 15/4/1890. (5) Erf 298, geleë in die dorp Amersfoort, Registrasieafdeling HS, Tvl., groot 2 855 vierkante meter. (6) Bekker Brink & Brink, Unitedgebou. Kerkstraat 60, Posbus 170, Ermelo. (7) Pretoria.

BANKJES.—(2) Certificate of Mineral Rights 756/1946, RM, dated 31/12/46. (3)—. (4) Hirsch Hillman, born on 19/5/1884. (5) The full, free and sole right and interest in and to all minerals and metals, precious stones and coal on, in and under Portion 1 of the farm Bankjes 588, Registration Division IR, Tvl. measuring 157,5448 hectares. (6) Edward Nathan & Friedland Inc., 23rd Floor, Saniamsentrum, 206/214 Jeppe Street, Johannesburg, 18/8/80. (7) Pretoria.

BETHAL.—(2) Deed of Transfer 24941/1943, dated 7/10/43. (3) Andries Jacobus van Niekerk, born on 19/3/18. (4) Sarel Johannes Matthee, born on 5/12/1896. (5) Portion 21 of the farm Goedehoop 308, Registration Division IR, Tvl, measuring 50,2085 hectares. (6) Favish & Barrable, First Floor, Trustbank Centre, 26 Rothsay Street, P.O. Box 265, Benoni. (7) Pretoria.

BIRCHLEIGH NORTH EXTENSION 1.—(2) Deed of Transfer T42905/1975, dated 15/12/75. (3) Birchleigh View Development (Pty) Ltd. (4) Francisco Jeronimo dos Reis. (5) Erven 1110, 1111 and 1194, situate in the Township of Birchleigh North Extension 1, Registration Division IR, Tvl. (6) Gerald Horwitz & Partners, Fifth Floor, Century Insurance Buildings, corner of Kruis and Market Streets, Johannesburg. (7) Pretoria.

BRAKPAN.—(2) Deed of Transfer T20295/76, dated 28/9/76. (3) Vivian Angus Redman, born on 1/9/13. (4) Dawid Jacobus Pieterse, born on 4/8/53. (5) Residential Erf 492, in the Township of Brakpan, Registration Division IR, Tvl, measuring 991 square metres. (6) P. J. Cowling, for Trollip Joubert Cowling & Janeke, Attorneys for the Applicant, Harvey Chambers, Prince George Avenue, P.O. Box 38, Brakpan, 1540, 18/8/80. (7) Rand Townships Registrar, Johannesburg.

BRAKPAN.—(2) Mortgage Bond B14970/78, dated 31/8/78. (3) Dawid Jacobus Pieterse, born on 4/8/53. (4) Allied Building Society. (5) Residential Erf 492, in the Township of Brakpan, Registration Division IR, Tvl, measuring 991 square metres. (6) P. J. Cowling, for Trollip Joubert Cowling & Janeke, Attorneys for the Applicant, Harvey Chambers, Prince George Avenue, P.O. Box 38, Brakpan, 1540, 18/8/80. (7) Rand Townships Registrar, Johannesburg.

BRAKPAN.—(2) Deed of Transfer F3557/1970, dated 13/3/70. (3) Egbert de Boer, born on 8/8/1899. (4) A. Adno Investments (Pty) Ltd (No. 69/18300). (5) Certain freehold business lot marked 2038, situate in Springs Road and Hamilton Avenue, in the Township of Brakpan, District of Brakpan, measuring 991 square metres. (6) P. J. Cowling, for Trollip Joubert Cowling & Janeke, Attorneys for the Applicant, Harvey Chambers, Prince George Avenue, P.O. Box 38, Brakpan, 1540, 18/8/80. (7) Rand Townships Registrar, Johannesburg.

DUXBERRY.—(2) Mortgage Bond B28676/1977, dated 2/9/77. (3) Muriel Ann Orbell, born Winn on 15/7/42, married in Malawi to Joseph Robin Orbell, which marriage is governed by the laws of Zimbabwe. (4) The Ryan Nigel Corporation Ltd (No. 70/8764). R30 000. (5) Erf 54, Duxberry Township, Registration Division IR, Tvl, measuring 2 237 square metres, held by Muriel Ann Orbell, born Winn on 15/7/42, married in Malawi to Joseph Robin Orbell, which marriage is governed by the laws of Zimbabwe, under Deed of Transfer 40690/1973, dated 20/11/73. (6) M. W. Jelley, Fluxman Rabinowitz & Partners, 23rd Floor, Carlton Centre, Commissioner Street, Johannesburg, 14/8/80. (7) Pretoria.

ELSPARK.—(2) Mortgage Bond B21405/1975, dated 21/10/75. (3) Jacobus Johannes Claasen, born on 5/3/36. (4) Oceana Leasing Services (Pty) Ltd (No. 70/10375), R10 000. (5) Erf 28, Township of Elspark, Registration Division IR, Tvl, measuring 1 071 square metres. (6) Raphaely-Weiner, Fourth Floor, Nedbank Mall, Commissioner Street, Johannesburg, 2001. (7) Johannesburg.

ENKELDEBOSCH.—(2) Akte van Transport T15983/1964, gedateer 15/5/64. (3) Jacobus Nicolaas Meyer, gebore op 8/1/1883. (4) Barend Jacobus van Dyk, gebore op 14/12/14. (5) (a) Resterende gedeelte van gedeelte van die plaas Enkeldebosch 20, Registrasieafdeling IS, Tvl., groot 184,1544 hektaar. (b) Gedeelte 1 van gedeelte van die plaas Enkeldebosch 20, Registrasieafdeling IS, Tvl., groot 68,5276 hektaar. (6) Van Zyl le Roux & Hurter, Posbus 974, Pretoria. (7) Pretoria.

ERMELO.—(2) Akte van Transport 15215/1962, gedateer 24/7/62. (3)—. (4) Catharina Elizabeth Adendorff, voorheen De Swardt, gebore Prinsloo, op 20/4/18, getroud buite gemeenskap van goedere met Hermanus Johannes Adendorff, kragtens Huweliksvoorwaardeskontrak H. 4087/72, maritale mag uitgesluit. (5) Die resterende gedeelte van Erf 102, gelee in die dorp Ermelo, Registrasieafdeling IT, Tvl., groot 1 428 vierkante meter. (6) Adendorff & Adendorff, Posbus 674, Ermelo, 2350. (7) Pretoria.

FOCHVILLE.—(2) Deed of Transfer T27300/1966, dated 13/9/66. (3)—. (4) Fochville Development Company (Pty) Ltd. (5) Erf 356, situate in the Town of Fochville, Registration Division IQ, Tvl, measuring 495 square metres. (6) Shapiro & Pokroy Inc., Tudor Chambers, Church Square, Pretoria. (7) Pretoria.

FOCHVILLE.—(2) Deed of Transfer T11638/1963, dated 16/5/63. (3)—. (4) Elkin Brown (Pty) Ltd. (5) Erf 364, situate in the Town Fochville, Registration Division IQ, Tvl, measuring 495 square metres. (6) Shapiro & Pokroy Inc., Tudor Chambers, Church Square, Pretoria. (7) Pretoria.

GEORGE.—(2) Transportakte T17378/1974, gedateer 3/6/74. (3) Johannes Stephanus Labuschagne, gebore op 2/4/02. (4) Danie Nel Beleggings (Edms.) Bpk. (No. 73/16641). (5) Plaas George Wellington 795, Registrasieafdeling LR, Tvl., groot 1 877,6708 hektaar. (6) Laubscher, du Buisson & Venter, Posbus 165, Pretoria, 0001. (7) Pretoria.

GERMISTON.—(2) Sectional Mortgage Bond B9855/1975 36/1976 (Unit), dated 5/6/75. (3) Poros Enterprises (Pty) Ltd, R300 000. (4) Natal Building Society (Permanent). (5) (a) Section number 7 as shown and more fully described on Sectional Plan 2/1976, in a building or buildings known as Bracken Villas, of which the floor area, according to the said Sectional Plan, is 78 square metres in extent, and an undivided share in the common property in the land and building or buildings as shown and more fully described on the said Sectional Plan, apportioned to the said section in accordance with the participation quota of the said section. (b) Section 18 as shown and more fully described on Sectional Plan 2/1976, in a building or buildings known as Bracken Villas, of which the floor area, according to the said Sectional Plan, is 91 square metres in extent, and; an undivided share in the common property in the land and building or buildings as shown and more fully described on the said Sectional Plan, apportioned to the said Section in accordance with the participation quota of the said Section. (6) W. E. Vardy, McFarlane & Krouse, 209 Rutland Place, Second Floor, F. H. Odendaal Street, Germiston, 1401, 29/8/80. (7) Rand Townships Registrar, Johannesburg.

GLEN AUSTIN.—(2) Deed of Transfer T39136/1976, dated 28/10/76. (3)—. (4) Hungarian Alliance, incorporated Association not for gain (No. 75/0671). (5) Holding 526, Glen Austin Agricultural Holdings Extension 3, Registration Division IR, Tvl, measuring 2,6936 hectares. (6) Sutherland & Van der Westhuizen Incorporated, Sanlam Centre, Randburg Mall, Randburg, 11/8/80. (7) Pretoria.

HEIDELBERG.—(2) Deed of Transfer 29270/1973, dated 6/9/73. (3)—. (4) Elizabeth Pamela Anne Edwards, born Place on 24/7/18, married out of community of property to Ronald Arthur Edwards. (5) Remaining extent of Portion 51 (a portion of Portion 28) of the farm Heidelberg 249, Registration Division JT, Tvl, measuring 34,0330 hectares. (6) Solomon & Nicolson, Second Floor, N B S Buildings, Pretorius Street, Pretoria. (7) Pretoria.

HENLEY-ON-KLIP.—(2) Deed of Transfer T14049/1974, dated 13/5/74. (3)—. (4) Harold Peter Günther Militz, born on 9/10/21. (5) Lot 282, Township of Henley-on-Klip, Registration Division IR, Tvl, measuring 4 064 square metres. (6) Werksmans, P.O. Box 927, Johannesburg, 2000, 11/8/80. (7) Pretoria.

IRENE.—(2) Cancellation of Mortgage Bond B21259/55, dated 5/8/55. (3) Robert John Boyd Bradley. (4) Annie Cruickshank Johnston, born Anderson, £550 (R1 100), plus £100 (R200). (5) Erf 152, situate in the Township of Irene, Registration Division JR, Tvl, measuring 4 140 square metres. (6) Savage, Jooste & Adams Incorporated, P.O. Box 745, Pretoria. (7) Pretoria.

JOHANNESBURG.—(2) Mortgage Bond B19727/1976, (3) Jacobus Johannes Petrus Pienaar as mortgagor and Isak Petrus Louw as mortgagee. (4)—. (5) 54 Hurst Hill Township, Registration Division IR, Tvl, measuring 495 square metres. (6) A. B. Furman, Attorneys, Suite 419, Locarno House, Loveday Street, Johannesburg, 11/8/80. (7) Johannesburg.

KEEROM.—(2) Transportakte T17377/1974, gedateer 3/6/74. (3) Mokala Beleggings (Edms.) Bpk. (4) Danie Nel Beleggings (Edms.) Bpk. (No. 73/16641). (5) Resterende gedeelte van die plaas Keerom 24, Registrasieafdeling KR, Tvl., groot 1 218,4755 hektaar. (6) Laubscher, Du Buisson & Venter, Posbus 165, Pretoria, 0001. (7) Pretoria.

KLERKSDORP.—(2) Mortgage Bond 15489/1972, dated 5/7/72. (3) Kilossa Farm (Pty) Ltd (No. 57/0705). (4) Nancy Annie Harriet van der Merwe, born Grobler on 13/5/29, R30 000. (5) Erf 747, situate in the Town Klerksdorp, Registration Division IP, Tvl, measuring 248 square metres. (6) Kantor, Du Toit & Coetzee, Third Floor, N B S Buildings, corner of Kerk and Boom Streets, Klerksdorp. (7) Pretoria.

LARRENDALE.—(2) Deed of Transfer F19500/1970, dated 20/11/70. (3)—. (4) Dennis Rumble, born on 12/11/44. (5) Erf 52, in the Township of Larrendale, Registration Division IR, Tvl, measuring 1 784 square metres. (6) A. E. Cook,

Cook & Falconer, Permanent Buildings, 47 Prince's Avenue, Benoni, 11 8 80. (7) Rand Townships Registrar, Johannesburg

MARLBORO.—(2) Deed of Transfer T46687/1967, dated 22/12/67. (3)— (4) Aldo Lucchesi, born on 12/4/42. (5) Erf 851, Marlboro Extension, Registration Division IR, Tvl, measuring 991 square metres. (6) Hammerschalg-Gishen Inc., Applicant's Attorneys, Africa House, corner of Third Street and Fourth Avenue, Springs, 1560, 15/8/80. (7) Pretoria.

MARLBORO.—(2) Deed of Transfer 18443/1967, dated 30/5/67. (3)—(4) Aldo Lucchesi, born on 12 4/42. (5) Erf 792, Marlboro Extension, Registration Division IR, Tvl, measuring 991 square metres (6) Hammerschlag-Gishen Inc., Africa House, corner of Third Street and Fourth Avenue, Springs, 1560, 15/8/80. (7) Pretoria.

MIDDELBURG.—(2) Akte van Transport T29896/1966, gedateer 3/10 66. (3) Ockert Machiel Jansen van Vuuren. (4) Nicolaas Christian Petrus Lombard. (5) Gedeelte 13 van die plaas Hoedspruit 346, Registrasieafdeling JS, Tvl., groot 10,2813 hektaar. (6) S. F. Steyn & Esterhuysen, Markstraat 20b, Posbus 68, Middelburg, Tvl. (7) Pretoria.

NELSPRUIT —(2) Mortgage Bond B16066/1975, dated 30/5/75. (3) Diederick Johannes Jordaan, born on 27/7/39. (4) Alfred Seer Sussens, born on 25/8/23, R26 300. (5) Portion 22 of the farm Highlands 240, Registration Division JU, Tvl, measuring 35,3670 hectares. (6) Rein & Verster, Eighth Floor, Old Mutual Centre, Andries Street, Pretoria, 21/8/80. (7) Pretoria.

NORWOOD.—(2) Deed of Transfer T16991/1974, dated 28/8/74, Mortgage Bond B18640/1974, dated 28/8/74. (3) Philip Louis Silberman. (4) Colonial Investments (Pty) Ltd, R15 000. (5) Portion 2 of Erf 150, Township of Norwood, Registration Division IR, Transvaal, measuring 496 square metres. (6) Raphaely-Weiner, Fourth Floor, Nedbank Mall, Commissioner Street, Johannesburg, 1/8/78. (7) Johannesburg.

NYLSTROOM.—(2) Transportakte T22966/1953, gedateer 13/10/53. (3) A. C. I. Muire, gebore Boshoff op 15/11/32. (4)—. (5) Gedeelte 4 ('n gedeelte van Gedeelte 1) van die plaas Rietfontein 389, Registrasieafdeling KR, Tvl., groot 14,8651 hektaar. (6) Van Rooy Scheepers & Koorts, Prokureurs, Mutualgebou, Potgieterstraat, Posbus 566, Nylstroom. (7) Pretoria.

PRETORIA.—(2) Transportakte T12759/80, gedateer 19/3/80. (3)—. (4) Samuel Nel. (5) Hoewe 86, Willowglen-landbouhoewes, Registrasieafdeling JR, Tvl., groot 2,2124 hektaar. (6) Couzyn, Hertzog & Horak Ingelyf, Posbus 125, Pretoria, 19/8/80. (7) Pretoria.

PRETORIA.—(2) Cancellation of Mortgage Bond B19183/1977, dated 30/5/77. (3) Petrus Willem Smit, born on 28/1/45. (4) Motorama Motors (Pty) Ltd (No. UC10863), R14 795, plus a costs preference of R5 000. (5) Portion 72 (a portion of Portion 1) of the farm Kameelfontein 297, Registration Division JR, Tvl, measuring 22,0346 hectares. (6) Weavind & Werksmans Inc., First Floor, Allied Buildings, 250 Pretorius Street, Pretoria. (7) Pretoria.

PRETORIA NORTH.—(2) No. T44381/73, gedateer 12/12/73. (3) Izak Petrus Albertus Liebenberg. (4) Willem Jacobus Hartzer. (5) Gedeelte 1 van Erf 454, geleë in die dorpsgebied Pretoria North, Registrasieafdeling JR, Tvl., groot 1 276 vierkante meter. (6) Gerhard Botha, Lourens & Kie. Ingelyf, Posbus 2345, Pretoria. (7) Pretoria.

ROOSSENEKAL.—(2) Deed of Transfer T7898/1966, dated 25/3/66. (3)—. (4) Isadore Harold Brozin, born on 13/12/31. (5) Erf 128, Township of Roossenekal, Registration Division JS, Tvl, measuring 277 square roods 112 square feet. (6) Werksmans, P.O. Box 927, Johannesburg. 19/8/80. (7) Pretoria.

SOUTPANSBERG.—(2) Akte van Transport 18699/1972, gedateer 7/7/72. (3) Stadsraad van Louis Trichardt. (4) Ashwin Maganlal Premjee. (5) Sekere Erf 2434, geleë in die dorpsgebied Louis Trichardt-uitbreiding 4, distrik Soutpansberg, groot 449 vierkante meter. (6) Coxwell & Steyn, Prokureurs vir die Applikant, Posbus 52, Louis Trichardt. 12/8/80. (7) Pretoria.

ST ELIENNE.—(2) Transportakte T17376/1974, gedateer 3/6/74. (3) Anna Maria Christina Labuschagne, gebore Badenhorst op 13/7/05, getroud buite gemeenskap van goedere met Johannes Stephanus Labuschagne, met uitsluiting van die maritale mag. (4) Dane Nel Beleggings (Edms.) Bpk. (No. 73/16641). (5) (a) Plaas St. Etienne 798, Registrasieafdeling LR, Tvl., groot 1 886,6631 hektaar. (b) Gedeelte 1 van die plaas Keerom 204, Registrasieafdeling KR, Tvl., groot 844,6232 hektaar. (6) Laubscher, Du Buisson & Venter, Posbus 165, Pretoria, 0001. (7) Pretoria.

TRANSVAAL.—(2) Akte van Transport 5400/1953, gedateer 13/3/53. (3)—. (4) Coenraad Willem Stolz, gebore op 1/7/17, Petrus Ignatius Stolz, gebore op 20/9/18, Gabriel Gerrit Frederik Stolz, gebore op 18/6/20, wyle Herbert Pearson Pretorius, gebore op 13/9/20, Frederik Daniel Jacobus Stoltz, gebore op 22/9 24, Jacoba Hendrika Stolz, gebore op 22/12/26, Daniel Fourie, gebore op 22/9/27, wyle Dirk Johannes Dubber van Galen Stolz, gebore op 25/8/36, Johanna Maria Malherbe, gebore Stoltz op 3/4/37, getroud binne gemeenskap van goedere met Martinus Josephus Malherbe, gebore op 2/1/36, Francina Hendrina Engelbrecht, gebore Stoltz op 4/7/40, getroud binne gemeenskap van goedere met Johannes Jacobus Engelbrecht, en Anna Cornelia Magrieta Bowerman, gebore Stoltz op 1/1/34, getroud binne gemeenskap van goedere met Charles David Bowerman, gebore op 20/7/28. (5) (a) Eenhonderd sewe-en-tagtig tweeduisend drie-honderd twee-en-vyftigste aandeel in Gedeelte 3 van die plaas Elandshoek 536, Registrasieafdeling JT, Tvl., groot 228,0345 hektaar. (b) Elf vier-en-tagtigste aandeel in Gedeelte 7 (gedeelte van Gedeelte 5) van die plaas Schoonwater 374, Registrasieafdeling JT, Tvl., groot 1,7131 hektaar. (c) Elf vier-en-tagtigste aandeel in resterende gedeelte van Gedeelte 5 (gedeelte van Gedeelte 1) van die plaas Schoonwater 374, Registrasieafdeling JT, Tvl., groot as sodanig 304,9254 hektaar. (6) Deneys Reitz, Prokureurs van Aanvraers, Posbus 61334, Marshalltown, 2107, 14/8/80. (7) Pretoria.

TRANSVAAL.—(2) Akte van Transport 10221/1924, gedateer 10/11/24, en Akte van Transport 10215/1924, gedateer 10/11/24. (3) Engela Adriana Krogman, gebore Steenkamp op 7/12/04, weduwee. (4) Land- en Landboubank van Suid-Afrika, R19 600. (5) (1) Resterende gedeelte van die plaas Rietfontein 112, Registrasieafdeling HS, Tvl., groot 849,7325 hektaar. (2) (a) Gedeelte 1 van Gedeelte 1 van die plaas Rietfontein 112, Registrasieafdeling HS, Tvl., groot 41,1135 hektaar. (2) (b) Gedeelte 2 van Gedeelte A van die plaas Rietfontein 112, Registrasieafdeling HS, Tvl., groot 55,6745 hektaar. (6) S. S. Strydom & Kie., Louis Trichardtstraat 68, Posbus 64, Volksrust. (7) Pretoria.

TRICHARDT.—(2) Deed of Transfer T7608/1953, dated 10/4/53. (3)—. (4) Elkin Brown, born on 1/4/17. (5) Erf 60, situate in the Town Trichardt, Registration Division IS, Tvl, measuring 1 487 square metres. (6) Shapiro & Pokroy Inc., Tudor Chambers, Church Square, Pretoria. (7) Pretoria.

VEREENIGING.—(2) Akte van Transport T43677/1979, gedateer 4/12/79. (3) Joseph Jeremia Hayes, gebore op 9/12/53. (4) Marthinus Albertus Deysel, gebore op 11/7/57. (5) Erf 1845, geleë in die dorpsgebied Three Rivers-uitbreiding 2, Registrasieafdeling IQ, Tvl., groot 996 vierkante meter. (6) 21/8/80. (7) Pretoria.

WINDSOR.—(2) No. T33049/1966 (Transfer), dated 28/10/66. (3)—. (4) J. J. Blignaut Properties (Pty) Ltd (No. 66/7394). (5) Erf 734, Windsor R, Registration Division IR, Tvl, measuring 991 square metres. (6) Nupen & Goodman Inc., 2620 Poyntons Buildings, Church Street, Pretoria. (7) Pretoria.

KAAP • CAPE

BELLVILLE.—(2) Deed of Transfer 3891, dated 20/2/76. (3) Jacobus Wynand Theron. (4) Unit Homes (Pty) Ltd. (5) Certain piece of redeemed quitrent land, situate in the Municipality of Bellville, Cape Division, being Erf 3283, Bellville, measuring 742 square metres. (6) Arthur E. Abrahams & Gross, P.O. Box 1661, Cape Town, 8000, 16/8/80. (7) Cape Town.

CALEDON.—(2) Deed of Transfer T2658, dated 10/2/76. (3) Jacobus Francois Andre Kriel, born on 22/7/46. (4) Steynie Johl, born Malherbe on 6/12/16, married out of community of property to Friedrich August Hellmuth Johl (ANC 111/1943). (5) Certain piece of land, situate in the Municipality of Hermanus, Division of Caledon, being Erf 407, Hermanus, measuring 1 115 square metres. (6) T. H. Snitcher Cohen & Snitcher, Applicant's Attorneys, 140 St George's Street, Cape Town, 13/8/80. (7) Cape Town.

CAPE.—(2) Deed of Transfer T1991, dated 2/2/78. (3)—. (4) Robin Albert Bosomworth, born on 16/8/39. (5) Certain piece of land, situate in the Municipality of Cape Town, Cape Division, being Erf 97806, a portion of Erf 48729, Cape Town at Newlands, measuring 262 square metres. (6) Herold, Gie & Broadhead, Permanent Buildings, 8 Darling Street, Cape Town. (7) Cape Town.

CAPE.—(2) Deed of Transfer 6157, dated 13/3/69. (3)—. (4) Werner Friedrich Adolf Götz. (5) Certain piece of land, situate in the Municipality of Fish Hoek, Cape Division, being the remainder of Erf 7112, Fish Hoek, measuring 595 square metres. (6) Prisman & Wilson, Huguenot Chambers, 40 Queen Victoria Street, Cape Town, 8001. (7) Cape Town.

CAPE TOWN.—(2) Deed of Transfer 17930, dated 1/11/54. (3) Omar Mahamood Rawoot, born on 10/1/1897. (4) Thomas Nicholas Potts, born on 10/1/12. (5) The remaining extent of certain piece of land, situate near Athlone in the City of Cape Town, Cape Division, called Lot 24, Township of Swartdam, being remainder Erf 38194, Cape Town at Athlone, measuring 20 508 square feet 1 052 square metres. (6) L. Smith & Co., 1103 Cartwrights Corner House, Adderley Street, Cape Town, 18/8/80. (7) Cape Town.

CAPE TOWN.—(2) Deed of Transfer 18790, dated 2/7/75. (3) The executor in the estate of the late Malcolm Howard Warner. (4) Alice Ellen Warner, born Kent on 22/10/1899, married in England to Kenneth Edward Warner, the marriage being governed by the laws of that country. (5) Certain redeemed quitrent land, situate in the Township of Camps Bay Extension 1, in the City of Cape Town, Cape Division, being Erf 1425, Camp's Bay, measuring 918 square metres. (6) Syfret Godlonton-Fuller Moore Inc., N.B.S. Buildings, Greenmarket Square, Cape Town. (7) Cape Town.

CAPE TOWN.—(2) Deed of Transfer 5373, dated 3/3/76. (3) Sarah Ellen Zive, born Schneider, widow. (4) Bernard Solomon Zive. (5) Certain piece of land, situate in the City of Cape Town, Cape Division, being Erf 87418, Cape Town at Muizenberg, measuring 496 square metres. (6) Arthur E. Abrahams & Gross, 54 Shortmarket Street, Cape Town. (7) Cape Town.

DE AAR.—(2) Transportakte 13087, gedateer 18/5/70. (3) Thomas Francois Burger Erlank, in sy hoedanigheid as bestuurder van Volkskas Bpk., Boedelafdeling, Kaapstad, en as sulks die genomineerde van gesegde Bank as eksekuteur testamentêr, in die boedel van wyle Ellen Maria Eugene du Plessis, gebore Potgieter. (4) Jacobus Barend Potgieter, gebore 8/7/32. (5) Sekere grond, synde Erf 1179, De Aar, geleë in die dorpsgebied Friedlander, in die Munisipaliteit van De Aar, in die administratiewe distrik Phillipstown, groot 714 vierkante meter. (6) Dichmont & Dichmont, Posbus 469, Kaapstad, 12/8/80. (7) Kaapstad.

INDWE.—(2) Deed of Transfer 17487, dated 6/11/53. (3)—. (4) Robert Ivor Hillhouse, born on 19/6/17. (5) (a) Certain piece of extinguished quitrent land, being the remaining extent of Lot 2338, called Koorn Hoek, situate in the Tambookie Location in the Division of Wodehouse, measuring as such 846,3007 hectares. (b) Certain piece of extinguished quitrent land, situate in the Tambookie Location in the Division of Wodehouse, being a place called Annex Lower Koornhoek, a part of the farm Koorn Hoek A, measuring 39,1706 hectares. (c) Certain piece of land, being the place called Bannockburn, portion of the farm Doornkop, situate in the Division of Wodehouse, measuring 245,7448 hectares. (d) Certain piece of extinguished quitrent land, being the place called Annex Bannockburn, a portion of Perseken Plaats, situate in the Division of Wodehouse, measuring 53,6303 hectares. (e) Certain piece of abolished quitrent land, situate in the Tambookie Location in the Division of Wodehouse, being the remaining extent of the place Koorn Hoek A, a portion of the Lot 2338, called Korn Hoek, measuring 430,0333 hectares. (6) E. J. Nurse, S.A. Permanent Buildings, P.O. Box 470, Queenstown. (7) Cape Town.

KAAP.—(2) Verbandakte 13381, gedateer 7/8/69. (3) Ebrahim Kahn, gebore op 23/11/14. (4) Karoo Vleis Unie Bpk., R7 000. (5) Seker stuk grond, geleë te Retreat in die stad Kaapstad, Kaapse Afdeling, synde Erf 82200, Kaapstad te Retreat, groot 9 885 vierkante meter. (6) D. P. de Klerk & Van Gend, Posbus 1857, Kaapstad. (7) Kaapstad.

PINELANDS.—(2) Deed of Transfer 24751, dated 13/8/76. (3)—. (4) Ruby Leila Wells, born Day on 22/6/1891, widow, now deceased. (5) Certain land, situate in the Municipality of Pinelands, Cape Division, being Erf 62, Pinelands, measuring 892 square metres. (6) Van der Spuy & Partners, 18 Lower Burg Street, Cape Town, 13/8/80. (7) Cape Town.

PORT ELIZABETH.—(2) Deed of Transfer 9054, dated 1/7/57. (3)—. (4) Margot Johanna Zinober, born Goldbaum on 1/4/05, widow, Vivienne Philippine Betty Zinober, born on 22/8/38, minor spinster, and Alan Solon Ivor Zinober, born on 22/11/47, minor. (5) (a) One fourteenth share in certain land, situate in the Municipality and Division of Port Elizabeth, being Erf 1066, North End, measuring 39 square roods, 14 square feet. (b) One fourteenth share in certain lot of land, situate in the Municipality of the City of Port Elizabeth, Division of Port Elizabeth, being Erf 1419, Port Elizabeth Central, measuring 7 square roods and 12,3 square feet (c) One fourteenth share in certain lot of land, situate as above being Erf 1420, Port Elizabeth Central, measuring 4 square roods, 19 and $\frac{3}{4}$ square feet (d) One fourteenth share in certain lot of land, situate as above, being remainder Erf 1416, Port Elizabeth Central, measuring 7 square roods, 108 square feet. (e) One fourteenth share in certain piece of land, situate as above, being Erf 1421, Port Elizabeth Central, measuring 5 square roods, 28,08 square feet. (6) Kaplan Loon Solomons & Blumberg, Attorneys for the Applicant, First Floor, Mercator Chambers, 166 Main Street, Port Elizabeth, 15/8/80. (7) Cape Town.

PORT ELIZABETH.—(2) Deed of Transfer 9052, dated 1/7/57. (3)—. (4) Margot Johanna Zinober, born Goldbaum on 1/4/05, widow, Vivienne Philippine Betty Zinober, born on 22/8/38, minor spinster and Alan Solon Ivor Zinober, born on 22/11/47, minor. (5) (a) One half share in certain land, situate in the Municipality and Division of Port Elizabeth, being Erf 1066, North End, measuring 39 square roods, 14 square feet. (b) One half share in certain lot of land, situate in the Municipality of the City of Port Elizabeth, Division of Port Elizabeth, being Erf 1419, Port Elizabeth Central, measuring 7 square roods and 12,3 square feet. (c) One half share in certain lot of land, situate as above, being Erf 1420, Port Elizabeth Central, measuring 4 square roods, 19 and $\frac{3}{4}$ square feet. (d) One half share in certain lot of land, situate as above, being remainder Erf 1416, Port Elizabeth Central, measuring as per remaining extent 7 square roods, 108 square feet. (e) One half share in certain piece of land, situate as above being Erf 1421, Port Elizabeth Central, measuring 5 square roods, 28,08 square feet. (6) Kaplan Loon Solomons & Blumberg, Attorneys for the Applicant, First Floor, Mercator Chambers, 166 Main Street, Port Elizabeth, 15/8/80. (7) Cape Town.

PORT ELIZABETH.—(2) Deed of Transfer 9411, dated 6/9/37. (3) Moonoo Coopoosamy Pillay. (4) Edel Ryan. (5) Certain redeemed quitrent land, situate in the Municipality of the City of Port Elizabeth, Division of Port Elizabeth, without garrison limits marked 4 (now Erf 1093, Port Elizabeth Central), measuring 27 square roods, 84 square feet. (6) Leonard Cohen & Joe Kaplan, Second Floor, Todd Chambers, Todd Street, North End, Port Elizabeth. (7) Cape Town.

PORT ELIZABETH.—(2) Deed of Transfer 16823, dated 14/10/49. (3)—. (4) Elizabeth House Estates (Pty) Ltd. (5) Certain piece of land, situate at St George's Park, upon the Hill, in the Municipality of the City of Port Elizabeth, Division of Port Elizabeth, being Lot 46 of Lots 46 and 47, measuring 2 675 square metres. (6) Brown & Braude, Attorneys for Applicant, 517–519 Main Street, North End, Port Elizabeth, 22/8/80. (7) Cape Town.

PORT ELIZABETH.—(2) Deed of Transfer 14724, dated 23/10/61. (3)—. (4) Willem Johannes Potgieter. (5) Certain redeemed quitrent land situate in the Municipality of Port Elizabeth, Division of Port Elizabeth, being Erf 1899, Newton Park, measuring 714 square metres. (6) Markmans, Applicant's Attorneys, Second Floor, President Centre, 562 Main Street, Port Elizabeth. (7) Cape Town.

VAN RHYNSDORP.—(2) Deed of Transfer 1127, dated 6/2/53. (3) Petrus Jacobus Trytsman, born on 17/11/1897. (4) National Portland Cement Company Ltd. (5) A one half share in certain piece of land, situate in the Division of Van Rhynsdorp, being Portion 1 of the farm Moedverloren 208, measuring 8,1508 hectares. (6) Fairbridge, Arderne & Lawton, Fourth Floor, Main Tower, Cape Town Centre, Cape Town. 18/8/80. (7) Cape Town.

VRYBURG.—(2) Transportakte 414/1961, geregistreer op 23/6/61. (3) Reynaud John David van der Riet, gebore op 10/3/46 en Vincent Warrently van der Riet, gebore op 26/8/49. (4) Nicolaas Francois Aucamp, gebore op 3/4/06. (5) Seker resterende gedeelte van Erf 37, Vryburg, geleë in die Munisipaliteit van Vryburg, afdeling Vryburg, groot 2 086 vierkante meter. (6) Du Plessis Viviers & Kie., Posbus 23, Vryburg, 8600. (7) Vryburg.

NATAL

ALFRED.—(2) Deed of Transfer T9827/1976, dated 11/6/76. (3)—. (4) Jan Willem Johannes Cloete, born on 17/11/35. (5) Lot 286, Township of Oslo Beach (Extension 1), situate in the Marburg Town Board Area and in the Lower South Coast Regional Water Services Area, County of Alfred, Province of Natal, in extent 1 130 square metres. (6) C. C. C. Raulstone & Co., 11 Gallwey Lane, P.O. Box 2315, Pietermaritzburg, 13/8/80. (7) Pietermaritzburg.

CLIFFDALE.—(2) Deed of Transfer 425/1948, dated 28/1/48. (3)—. (4) Lallu Singh, born October on 1906. (5) Lot 153, Township of Cliffdale, situate in the regulated area of Cliffdale, County of Pietermaritzburg, Province of Natal, in extent 4,9153 hectares. (6) Merret & Berkowitz, Attorneys, Notaries & Conveyancers, 10th Floor, Daily News Buildings, 85 Field Street, Durban. 15/8/80. (7) Pietermaritzburg.

DURBAN.—(2) Deed of Transfer 2710/1946, dated 15/4/46. (3)—. (4) Ahuva Wies, born Yekdaloff on 30/7/19, married out of community of property to Alick Abe Wies. (5) Lot 388, Block Stella of the Town Lands of Durban 1737, situate

in the City and County of Durban, Province of Natal and extent 9 508 square feet (883 square metres). (6) Ditz Inc., Durban Club Place, Durban. (7) Pietermaritzburg.

DURBAN.—(2) Cancellation of Mortgage Bond 11590/77, dated 16/9/77. (3) Brian Edward Cawthorne, born on 10/9/42. (4) Goldies Motor Motor Supplies (Pty) Ltd (No. UC27871), R4 000. (5) Subdivision 7 of Julien of the farm Wentworth 860, situate in the City and County of Durban, Province of Natal, in extent 1 107 square metres. (6) Cecil Nathan, Beattie & Co., P.O. Box 68, Pietermaritzburg, 18/8/80. (7) Pietermaritzburg.

GREYTOWN.—(2) Certificate of Registered Title 15857/1973, dated 21/9/73. (3)—. (4) Johanna Catharina van der Westhuizen, born Eksteen on 26/6/18, married out of community of property to Jasper Petrus Cornelius van der Westhuizen, under (Antenuptial Contract Copy 59/1971). (5) Subidivision 4 of Lot 710, Township of Greytown, situate in the Borough of Greytown and County of Umvoti, Province of Natal, in extent 1 354 square metres. (6) Laurie C. Smith, De Broglio Inc., P.O. Box 46, Stanger. (7) Pietermaritzburg.

NEWCASTLE.—(2) Transportakte 5824/1966, gedateer 23/5/66. (3) Johannes Wilhelmus van Niekerk. (4) Margaret Anne Andrew. (5) Onderverdeling 2 van Perseel 772, Newcastle, geleë in die dorpsgebied Newcastle, afdeling Klipvivier, Provinsie Natal, groot 2,0210 hektaar. (6) Landman & Fourie, Posbus 1095, S.A. Perm. Plaza, Newcastle, 2940. (7) Pietermaritzburg.

PIETERMARITZBURG.—(2) Deed of Transfer T2117/1939, dated 2/5/39. (3)— (4) Philemon Gumede, born approximately -/-/04. (5) Subdivision 3 of A of Lot S74 No. 5464, situate in the County of Pietermaritzburg, Province of Natal, in extent 10,0068 acres. (6) Leslie Weinberg & Co., Fifth Floor, Main City Buildings, Longmarket Street, Pietermaritzburg. (7) Pietermaritzburg.

PIETERMARITZBURG. — (2) Deed of Transfer 1348/1967, dated 30/1/67. (3)—. (4) Bernard Peter Denny, born 31/8/34. (5) Subdivision 9 of the farm Arden 14074, situate in the County of Pietermaritzburg, Province of Natal, in extent 28,7719 hectares. (6) Bale Greene & Morcom, Applicant's Attorneys, 28 Chancery Lane, Pietermaritzburg. (7) Pietermaritzburg.

TUGELA MOUTH.—(2) Deed of Grant 85/1962, dated 4/10/62, and registered on 19/10/62. (3) The Republic of South Africa. (4) Thelma Mavis Niven, born Oliver on 21/8/08, married out of community of property to Gordon Edward Chalmers Niven. (5) Lot 29, Township of Tugela Mouth, situate in the Development Area of Tugela Mouth, County of Zululand, Province of Natal, in extent 2 900 square metres. (6) Wynne & Wynne, P.O. Box 1, Eshowe, 3815, 10/7/80. (7) Pietermaritzburg.

ORANJE-VRYSTAAT • ORANGE FREE STATE

EDENBURG.—(2) Mortage Bond B1161/1972, dated 18/1/72. (3) Ellis Green Rabinowitz Investments (Pty) Ltd. (4) Federated Credit Ltd, now Standard Bank Corporate Finance Ltd, R6 689,27. (5) Portion 1 Erf 136, Edenburg, measuring 3 965 square metres. (6) Getz Behr Ogus & Mendel Cohen, P.O. Box 374, Pretoria, 0001. (7) Pretoria.

FRANKFORT.—(2) Transportakte 1294/1967, geregistreer op 31/3/67. (3) Marthinus Christoffel Barnard, gebore op 27/12/07. (4) Jasper Johannes Vermaak, gebore op 15/3/05. (5) (a) Erf 126, geleë in die dorp Tweeling, distrik Frankfort, groot 69 vierkante roede en 64 vierkante voet. (b) Erf 128, geleë in die dorp Tweeling, distrik Frankfort, groot 69 vierkante roede en 64 vierkante voet. (6) Swanepoel & Human, Vanriebeeckstraat, Posbus 11, Tweeling. (7) Bloemfontein.

ORANJE-VRYSTAAT.—(2) Transportakte 1729/1940, geregistreer op 19/6/40. (3)—. (4) Ella Olivia Joubert, gebore Du Plessis, op 2/10/1896. (5) Sekere Bouperseel 115, geleë op die plaas Welteevreden 190, distrik Vredefort, groot 4,2817 hektaar. (6) Symington & De Kok, Posbus 760, Bloemfontein. (7) Bloemfontein.

PARYS.—(2) Sertifikaat van Geregistreerde Titel 3936/1967. (3)—. (4) Deneysville Township (Pty) Ltd. (5) Sekere resterende gedeelte van Erf 1295, geleë in die plaaslike gebied van Vaal Park, distrik Parys, groot 42,3227 hektaar. (6) Naude & Van de Wall, Posbus 260, Bloemfontein. (7) Bloemfontein.

ORDERS VAN DIE HOF • ORDERS OF THE COURT

Transvaalse Provinsiale Afdeling, Pretoria
Transvaal Provincial Division, Pretoria

Case M2019/80.—TEMPEST INTERNATIONAL (PTY) LTD, Applicant, and POWER BUSINESS SUPPLIES (PTY) LTD, c/o Room 411, Apollo Centre, corner of Church and Du Toit Streets, Pretoria, Respondent; 19/8/80, the Court orders:

1. That the above-mentioned Respondent Company be and is hereby placed under provisional winding-up order;
2. That a rule nisi do hereby issue calling upon all persons concerned to appear and show cause, if any, to this Court at 10h00 on 9/9/80, why the Respondent Company should not be placed under final winding-up order;
3. That service of this rule nisi be effected upon the Respondent Company at its registered office, and by publication forthwith once in each of the *Government Gazette* and a daily newspaper.

Case M2153/80.—ECONO DECORATORS (PTY) LTD, having its registered office at Fifth Floor, A.A. House, 395 Schoeman Street, Pretoria, Applicant; 15/8/80, the Court orders:

1. That the above-mentioned Company be and is hereby placed under provisional winding-up order;
2. That a rule nisi do hereby issue calling upon all persons concerned to appear and show cause, if any, to this Court, at 10h00 on 9/9/80, why the Company should not be placed under final winding-up order;
3. That the costs of this application be costs in the liquidation of the Company;
4. That service of this rule nisi be effected upon all known creditors of the Company by certified post, and by publication forthwith once in each of the *Government Gazette*, the *Pretoria News* and the *Hoofstad* newspapers.

Saak M1932/80.—NAJADU BOUERS (EDMS.) BPK., Applikant, en ASTRID LOODGIETERS (EDMS.) BPK., met geregistreerde adres te Malmesburystraat 669, Wingate Park, Pretoria, Respondent; 12/8/80, die Hof gelas:

1. Dat die voormelde Respondent hierby in voorlopige likwidasie geplaas word;
2. Dat 'n bevel nisi hierby uitgereik word wat alle belanghebbendes oproep om redes, indien enige, voor hierdie Hof aan te voer om 10h00 op 9/9/80, waarom die Respondent nie onder finale likwidasie geplaas sal word nie;
3. Dat betekening van hierdie bevel nisi geskied aan die Respondent by sy geregistreerde kantoor, en onverwyld gepubliseer word een maal in elk van die *Staatskoerant* en 'n daaglikse nuusblad.

Saak M1905/80.—WILLIAM THOMAS COLLEN, ANDRE FRANCOIS DU TOIT en ANDRIES JACOBUS BESTER MAREE, Applikante, en TEC DUR WELDING AND TOOL APPLIANCES (EDMS.) BPK., met geregistreerde kantore te Nedbanksentrum 420, Witbank, Respondent; 12/8/80, die Hof gelas:

1. Dat die bogemelde Respondent hierby in voorlopige likwidasie geplaas word;
2. Dat 'n bevel nisi hierby uitgereik word wat alle belanghebbendes oproep om redes, indien enige, voor hierdie Hof aan te voer om 10h00 op 2/9/80, waarom die Respondent nie onder finale likwidasie geplaas sal word nie;
3. Dat betekening van hierdie bevel nisi geskied aan die Respondent by sy geregistreerde kantoor, en onverwyld gepubliseer word een maal in elk van die *Staatskoerant* en 'n daaglikse nuusblad.

Saak M1799/80.—KLAAS ALEXANDER ERASMUS, Applikant, en BURO VIR EKONOMIESE ONTWIKKELINGSHULP (EDMS.) BPK., wat besigheid dryf van Bemarkings- en Besigheidskonsultante met 'n grafiese afdeling wat brosjures en advertensies opstel, met geregistreerde kantore te 20ste Verdieping, SALU-gebou, Schoemanstraat, Pretoria, Respondent; 19/8/80, die Hof gelas:

1. Dat die bogmelde Respondent Maatskappy hierby in voorlopige likwidasie geplaas word;
2. Dat 'n bevel nisi hierby uitgereik word wat alle belanghebbendes oproep om redes, indien enige, voor hierdie Hof aan te voer om 10h00 op 9/9/80, waarom die Respondent Maatskappy nie onder finale likwidasie geplaas sal word nie;

ORDERS VAN DIE HOF (vervolg) • ORDERS OF THE COURT (continued)

3. Dat betekening van hierdie bevel nisi geskied aan die Respondent Maatskappy by sy geregistreerde kantore, en onverwyld gepubliseer word een maal in elk van die *Staatskoerant* en 'n daaglikse nuusblad.

Witwatersrandse Plaaslike Afdeling, Johannesburg
Witwatersrand Local Division, Johannesburg

Case 6469/80.—HYMIE TUCKER FINANCE COMPANY (PTY) LTD, Applicant, and BURDLATH INDUSTRIES (PTY) LTD, carrying on business under the style of Everlastex Coatings Manufacturers Contractors, with its principal place of business at 18 Plantation Road, Eastleigh, Edenvale, Tvl., and having its registered office at 3 University Road, Auckland Park, Johannesburg, Tvl., Respondent; 12/8/80, the Court orders:

1. That the above-mentioned Respondent Company be and is hereby placed under provisional winding-up order in the hands of the Master;
2. That a rule nisi do issue calling upon all persons concerned to appear and to show cause, if any, to this Court, on 9/9/80 at 10h00, why the said Respondent Company should not be placed under final winding-up order;
3. That a copy of this rule nisi be served on the Respondent Company at its registered office and be published forthwith once in the *Government Gazette* and in a Johannesburg daily newspaper.

Case 9668/80.—TRITONE LITHO COMPANY (PTY) LTD, Applicant, and REKATON (PTY) LTD, place of business is or was First Floor, Noswal Hall, corner of Stiemens and Bertha Streets, Braamfontein. Its registered office is at Seventh Floor, Zambesi House, 44 Von Wielligh Street, Johannesburg, Respondent; 12/8/80, the Court orders:

1. That the above-mentioned Respondent Company be and is hereby placed under provisional winding-up order in the hands of the Master;
2. That a rule nisi do issue calling upon all persons concerned to appear and to show cause, if any, to this Court on 9/9/80 at 10h00, why the said Respondent Company should not be placed under final winding-up order;
3. That a copy of this rule nisi be served on the Respondent Company at its registered office and be published forthwith once in the *Government Gazette* and in a Johannesburg daily newspaper.

Case 11790/80.—JOHN CHRISTOPHER ST CLAIR DISSELL, Applicant, and EMBROC FINANCE (PTY) LTD, trading as Hillrand Business Brokers, Third Floor, Hillrand Buildings, 60 Pretoria Street, Hillbrow, Johannesburg, and its registered office at Seventh Floor, 90 Anderson Street, Johannesburg, Respondent; 19/8/80, the Court orders:

1. That the above-mentioned Respondent Company be and is hereby placed under provisional winding-up order in the hands of the Master;
2. That a rule nisi do issue calling upon all persons concerned to appear and to show cause, if any, to this Court on 23/9/80 at 10h00, why the said Respondent Company should not be placed under final winding-up order;
3. That a copy of this rule nisi be served on the Respondent Company at its registered office and be published forthwith once in the *Government Gazette* and in a Johannesburg daily newspaper;
4. That a copy of this rule nisi be served on all known creditors by registered post.

Case 10589/80.—ATID INVESTMENT COMPANY (PTY) LTD, Applicant, and GIZEBO (PTY) LTD, having its registered head office at c/o Scher, Posner & Partners, 13th Floor, Y P F Centre, 66 Smal Street, Johannesburg, Respondent; 19/8/80, the Court orders:

1. That the above-mentioned Respondent Company be and is hereby placed under provisional winding-up order in the hands of the Master;
2. That a rule nisi do issue calling upon all persons concerned to appear and to show cause, if any, to this Court, on 16/9/80 at 10h00, why the said Respondent Company should not be placed under final winding-up order;
3. That a copy of this rule nisi be served on the Respondent Company at its registered office and be published forthwith once in the *Government Gazette* and in a Johannesburg daily newspaper.

Case 11609/80.—RAND SHOPFITTERS, Applicant, and C & N BAKERY (PTY) LTD, having its principal place of business at Hillrand Buildings, corner of Pretorius and Catherine Streets, Hillbrow, Johannesburg, Respondent; 19/8/80, the Court orders:

1. That the above-mentioned Respondent Company be and is hereby placed under provisional winding-up order in the hands of the Master;
2. That a rule nisi do issue calling upon all persons concerned to appear and to show cause, if any, to this Court on 16/9/80 at 10h00, why the said Respondent Company should not be placed under final winding-up order;
3. That a copy of this rule nisi be served on the Respondent Company at its registered office and be published forthwith once in the *Government Gazette* and in a Johannesburg daily newspaper.

GREGORY KNITTING MILLS (PTY) LTD, Applicant; 19/8/80, the Court orders:

1. That a rule nisi do issue calling upon all persons concerned to appear and to show cause, if any, to this Honourable Court at 10h00 on 16/9/80, or so soon thereafter as the matter can be heard why an order should not be granted—

(a) confirming the reduction of the Company's issued share capital in terms of the special resolution passed by the Company on 21/7/80, from R1 247 171 to R24 943,42, and the reduction of the Company's authorised share capital from R1 764 671 to R35 293,42 in each case by reducing the nominal value of each share in the Company's authorised share capital from 50c to 1c and by repaying to the holders of the issued shares the sum of 49c per share;

(b) confirming the cancellation of the Company's share premium account of R164 961 by the repayment of that amount to the shareholders of the Company;

2. That 30/6/80, be and it is hereby determined as the date on which creditors who are entitled to object to the proposed reduction of capital are to be determined and that a list of creditors as at that date be settled as the list required in terms of section 85 (2) of Act 61 of 1973, as amended;
3. That the applicant give notice forthwith by circular letter sent by registered post to each of the creditors of the Company, as at 30/6/80, stating the nature of the debt due to it and the amount which is admitted to be due to it and enclosing a copy of this rule nisi;
4. That an affidavit be filed on or before the return day of this rule showing that the amounts due to all creditors who have not consented to the proposed reduction of capital or are not shown to have been paid have been secured by an appropriation of the amount due in the books of the applicant or in such manner as may be acceptable to the Court;
5. That service of this rule be effected by publication forthwith once in the *Government Gazette* and in *The Star* newspaper.

Case 10571/80.—AAGE BERTRAM FIGENSCHOU, Applicant, and COMAVI (PTY) LTD, the registered office of which Company is situated at Suite 4906, Carlton Centre, Commissioner Street, Johannesburg, Respondent; 12/8/80, the Court orders:

1. That the above-mentioned Respondent Company be and is hereby placed under provisional winding-up order in the hands of the Master;
2. That a rule nisi do issue calling upon all persons concerned to appear and to show cause, if any, to this Court on 9/9/80 at 10h00, why the said Respondent Company should not be placed under final winding-up order;
3. That a copy of this rule nisi be served on the Respondent Company at its registered office and be published forthwith once in the *Government Gazette* and in a Johannesburg daily newspaper.

Case 11117/80.—FRIEDLEIN AND COMPANY (PTY) LTD, Applicant, and SWAZI PINE PRODUCTS (PTY) LTD, having its registered office at 235 Union Centre East, 55 Harrison Street, Johannesburg, and carries on business as furniture exporters at Seventh Floor, Rennie House, Braamfontein, Johannesburg, Respondent; 13/8/80, the Court orders:

1. That the above-mentioned Respondent Company be and is hereby placed under provisional winding-up order in the hands of the Master;

ORDERS VAN DIE HOF (vervolg) • ORDERS OF THE COURT (continued)

2. That a rule nisi do issue calling upon all persons concerned to appear and to show cause, if any, to this Court on 2/9/80 at 10h00, why the said Respondent Company should not be placed under final winding-up order;

3. That a copy of this rule nisi be served on the Respondent Company at its registered office and be published forthwith once in the *Government Gazette* and in a Johannesburg daily newspaper;

4. That the cost of the opposition to this application be costs in the Liquidation.

Case 10182/80—PIONEER READY MIXED CONCRETE (PTY) LTD, Applicant, and BETTENCOURT CONSTRUCTION (PTY) LTD, having its registered office at c/o Robert Taylor, 401 Fourth Floor, 15 Anderson Street, Johannesburg, Respondent; 12/8/80, the Court orders:

1. That the above-mentioned Respondent Company be and is hereby placed under provisional winding-up order in the hands of the Master;

2. That a rule nisi do issue calling upon all persons concerned to appear and to show cause, if any, to this Court on 2/9/80 at 10h00, why the said Respondent Company should not be placed under final winding-up order;

3. That a copy of this rule nisi be served on the Respondent Company at its registered office and be published forthwith once in the *Government Gazette* and in a Johannesburg daily newspaper.

TERSYDESTELLINGS EN AFWYSINGS VAN AANSOEKE

Kennis word hiermee deur die Meesters van die Hooggeregshof van Suid-Afrika, soos vermeld, gegee van die tersydestelling van voorlopige bevele van sekwestrasie/likwidasie en die afwysing van aansoeke.

Die inligting word verstrek in die volgorde: Boedelnommer; die applikant; die verweerder; die datum van uitreiking van die voorlopige bevel; die Afdeling van die Hooggeregshof; die datum van die afwysingsbevel.

SUPERSESSIONS AND DISCHARGE OF PETITIONS

Notice is hereby given by the Masters of the Supreme Court of South Africa, as stated, of the supersession of provisional orders of sequestration/liquidation and the discharge of petitions.

The information is given in the following order: Estate number; the applicant; the respondent; the date of the provisional order granted; the Supreme Court Division; the date of the discharge order.

C210/80—ERNEST DAVID JAMES, in his capacity as Provisional Liquidator of Respondent, Applicant, LIFETEX COATINGS (PTY) LTD, registered office at c/o Coopers & Lybrand, 10th Floor, Shell House, 9 Riebeeck Street, Cape Town, Respondent; 9/5/80, Cape of Good Hope Provincial; 6/8/80.

GEREGTELIKE EN ANDER OPENBARE VERKOPE
SALES IN EXECUTION AND OTHER PUBLIC SALES
GEREGTELIKE VERKOPE • SALES IN EXECUTION

UNIVERSITY OF PORTHARCOURT
Together in Excellence

TRANSVAAL

BRAKPAN.—Case 2431/80. Magistrate's Court, Brakpan: South African Permanent Building Society, Plaintiff, and J. H. V. Zwanepoet, Defendant.

In pursuance of a judgment in the Court of the Magistrate of Brakpan and writ of execution, dated 9/7/80, the property listed hereunder will be sold in execution on Friday, 12/9/80 at 11h00, at the Messenger of the Court's office, c/o the Magistrate's Court, Prince George Avenue, Brakpan, to the highest bidder:

Certain Erf 1137, situate in the Township of Brenthurst Extension 1, Brakpan, Registration Division IR, Tvl, measuring 867 square metres, known as 64 Hosking Street, Brenthurst Extension 1, Brakpan.

No warranty or undertaking is given in relation to the nature of the improvements, which are described as follows:

Main Building: Dwelling-house consisting of two bedrooms, bathroom and changeroom, lounge, dining-room, kitchen.

Outbuildings: Garage and servant's room.

The material conditions of sale are.—1. The sale will be held by public auction and without reserve and will be voetstoots.

2. Immediately after the sale the purchaser shall sign the conditions of sale which can be inspected at the Messenger of the Court's office.

3. The purchaser shall pay all amounts necessary to obtain transfer of the property, including all costs of transfer, transfer duty, rates, taxes, licenses, sanitary fees, interest, etc.

4. The purchase price shall be paid as to 10 per cent thereof or R300, whichever is the greater, on the day of the sale and the unpaid balance, together with interest on the full amount of the Judgment Creditor's claim at the rate of 9,5 per cent per annum to date of payment, within 14 days to be paid or secured by a bank or building society guarantee.

5. The property shall be sold subject to any existing tenancy.

6. Failing compliance with the provisions of the conditions of sale, the purchaser shall forfeit for the benefit of the Execution Creditor the deposit referred to in (4) above, without prejudice to any claim against him for damages.

Brakpan, 2/8/80.

A. B. du Plessis, Attorney for Execution Creditor, for Van der Merwe & Co., Attorneys, 106 Victoria Avenue, Brakpan.

WONDERBOOM.—Saak 12155/77. Landdroshof, Pretoria: Tuckers Land and Development Corporation (Pty) Ltd, Eiser, en Mev. A. F. M. Kuhn, Verweerder.

In uitvoering van 'n vonnis van die Landdroshof, Pretoria, gegee op 30/6/78, en tenuitvoerlegging van 'n lasbrief vir eksekusie uitgereik op 25/7/78, sal 'n geregtelike verkoping gehou word om 10h00 op 12/9/80, voor die Landdroskantoor, Wonderboom, Pretoria, van die ondergemelde eiendom van die Eksekusieskuldenaar op die voorwaardes wat uitgelees sal word deur die Afslaer, synde die Geregsbode, Wonderboom, ten tyde van die verkoping, en welke voorwaardes ondersoek kan word voor die verkoping by die kantore van die Geregsbode, Wonderboom, Pretoria:

Sekere Gedeelte 20 van die plaas Welgevonden 93, JR, Tvl., groot 21,4133 hektaar.

Die volgende besonderhede word verskaf in verband met die verbeterings op die eiendom, alhoewel in hierdie geval niks gewaarborg word nie aangesien die verkoping voetstoots is:

1. Bekend as Gedeelte 20 van die plaas Welgevonden 93.
2. Eenvertrekgebou, steen met sinkdak.
3. Swembad.
4. Een stoor.

Terme van betaling.—Die koopprys sal betaal word teen 'n deposito van 10 persent in kontant by ondertekening van die verkoopvoorwaardes met aanvaarding van 'n bod en die balans uitstaande, tesame met rente tot datum van registrasie van transport, teen 'n koers van 11 persent per jaar, en verseker te word deur 'n bank- of bouvereniging waarborg aan die Geregsbode voorsien te word binne 14 dae na datum van die verkoping.

Die koper sal verantwoordelik wees by ondertekening van die verkoopvoorwaardes, om aan die Geregsbode te betaal, sy kostes van die verkoping sowel as kommissie.

Die koper sal verder verantwoordelik wees, en sal op aanvraag betaal, alle bedrae nodig vir doeleindes van registrasie van transport in sy naam, insluitende transportkostes sowel as seëlregte en agterstallige belastings.

Pretoria, 22/7/80.

Rorich Wolmarans & Luderitz Ingelyf, Eiser se Prokureurs, Agste Verdieping, Thibaultgebou, Pretoriusstraat 225, Pretoria.

BOKSBURG.—Case 6818/74. Magistrate's Court, Benoni: Western Bank Ltd, Plaintiff, and C. C. Post, Defendant.

In pursuance of a judgment in the above Honourable Court, and warrant of execution dated 29/10/74, the following property will be sold in execution by public auction by the Messenger of the Court, Boksburg, on 26/9/80 at 11h15, at the Magistrate's Court, Boksburg, to the highest bidder:

Certain Stand 71, situate in the Township of Jansen Park, Registration Division IR, Tvl, also known as 21 Vickers Road, Jansen Park, Boksburg.

Material conditions of sale.—1. The property will be sold without reserve to the highest bidder and voetstoots.

2. The purchase price shall be paid as to 10 per cent hereof at the time of the sale unless otherwise agreed to by the Plaintiff and the Messenger of the Court, and the unpaid balance, together with interest thereon at the rate of 12 per cent per annum to date of payment, shall be paid or secured by an approved bank or building society guarantee to be furnished within 30 days of the date of the sale.

3. The property will be sold subject to any existing tenancy.

The full conditions of sale, which will be read out by the Messenger of the Court immediately prior to the sale, may be inspected at the offices of the Messenger of the Court, Commissioner Street, Boksburg.

Benoni, 29/7/80.

I. Kramer & Wesemann, Attorneys for Plaintiff, First Floor, Southern Trident House, Cranbourne Avenue, P.O. Box 41, Benoni.

PRETORIA NORTH.—Case 12006/78. Supreme Court, Transvaal Provincial Division: South African Permanent Building Society, Plaintiff, and Adriaan Jacob Adolf Buitendag, Defendant.

In pursuance of a judgment of the above Court and writ of execution, dated 8/5/78, the undermentioned property will be sold in execution on Friday, 12/9/80 at 11h00, at the offices of the Deputy Sheriff, Wonderboom, City Hall, Brits Road, Pretoria North, to the highest bidder:

Certain Portion 1 of Lot 999, situate in the Township of Pretoria North, Registration Division JR, Tvl, measuring 1 276 square metres, held by the Defendant under Deed of Transfer 42284/1965, dated 19/11/65, known as 61 Jack Hindon Street, Pretoria North, Pretoria.

The following improvements are situate on the property, although in this respect nothing is guaranteed:

A single-storey dwelling-house, built of brick under iron roof, with Rhino Ceilings, wall-to-wall carpets and floors with vinyl covering, consisting of a lounge, dining-room, three bedrooms, two bathrooms and a kitchen.

Outbuildings consist of a garage and a servant's room.

The conditions of sale, which will be read immediately prior to the sale, are lying for inspection at the office of the Deputy Sheriff, City Hall, Brits Road, Pretoria North.

Pretoria, 8/8/80.

H. P. Jeffe., a, c/o Findlay & Niemeyer, Plaintiff's Attorneys, 635 Permanent Buildings, Paul Kruger Street, Pretoria.

BRITS.—Saak 1361/79. Landdroshof, Brits: Die Stadsraad van Brits, Eiser, en W. C. White, Verweerder.

Geliewe kennis te neem dat in navolging van 'n vonnis wat op 28/3/80 deur die bogemelde Agbare Hof in hierdie saak verleen is, en 'n daaropvolgende lasbrief vir eksekusie op 4/7/80 op die onderstaande erf geregtelik beslag gelê is in die distrik van die Landdroshof, Brits.

Geliewe ook verder kennis te neem dat Erf 1429, Uitbreiding 10, by wyse van 'n openbare veiling op 18/9/80 om 11h00, verkoop sal word voor die Landdroshof, Brits.

'n Sekere Erf 1429, geleë te Brits-uitbreiding 10, geregistreer kragtens Akte van Transport 3283/1978, gedateer 13/2/78.

Die voorwaardes van verkopings al gedurende kantoorure by die kantoor van die Geregsbode, Murraylaan 43c, Brits, ter insae lê.

Brits, 13/8/80.

R. H. van Onselen, vir Jonker, Van Onselen & V. d Walt, Vanveldenstraat 40, Posbus 1008, Brits.

JOHANNESBURG.—Case 6239/80: United Building Society, Plaintiff, and Remmert van Lingen, Defendant.

In execution of a judgment of the Supreme Court of South Africa (Witwatersrand Local Division) in the above-mentioned suit, a sale without reserve will be held at the offices of the Deputy Sheriff, Delvers Square, corner of Delvers and Kerk Streets, Johannesburg, on Tuesday, 16/9/80 at 11h00, of the undermentioned property of the Defendant on the conditions to be read out by the auctioneer at the time of the sale and which conditions may be inspected at the offices of the Deputy Sheriff, Johannesburg, prior to the sale:

Certain Lot 262 in the Township of Newlands (Johannesburg), Registration Division IQ, Tvl, measuring 495 square metres, held by Remmert van Lingen under Deed of Transfer T1042/1979, dated 29/1/79.

The following information is furnished re the improvements, though in this respect nothing is guaranteed:

Single-storey dwelling under iron roof comprising lounge, three bedrooms, bathroom with w.c., kitchen, pantry, garage, servant's room and toilet.

Terms.—10 per cent of the purchase price and 2½ per cent auctioneer's charges (minimum R20) in cash on the day of the sale, the balance against transfer to be secured by a bank or building society or other acceptable guarantee to be furnished within 14 days from the date of sale.

Routledge-MacCallums, Plaintiff's Attorneys, United Towers, 160 Main Street, Johannesburg.

RANDFONTEIN.—Saak 997/79. Landdroshof, Randfontein: South African Permanent Building Society, Eiser, en Johannes Hendrikus Botes, Verweerder.

Ingevolge uitspraak van die Landdros van Randfontein en lasbrief vir eksekusie met datum 5/2/80, sal die ondervermelde eiendom op 19/9/80 om 14h30, voor die Landdroshof, Pollockstraatingang, Randfontein, aan die hoogste bieder geregtelik verkoop word, naamlik:

Erf 586, Randfontein-dorpsgebied, Registrasieafdeling IQ, Tvl., waarop opgerig is 'n aparte woning van baksteenmure onder sinkdak wat gesê word ses kamers, kombuis, twee badkamers en die gewone buitegeboue te bevat ten opsigte waarvan egter geen waarborg gegee word nie.

Voorwaardes.—R500 kontant op die dag van verkoop en die balans teen registrasie van transport, verseker te wees deur 'n goedgekeurde bank- of bouverenigingwaarborg gelewer te word binne 21 dae. Die koper moet transportkoste, belastings, ens. betaal. Die eiendom word voetstoots verkoop onderhewig aan enige bewoningsreg.

Die volledige voorwaardes van verkoop (wat na die verkoop geteken moet word), mag gedurende kantoorure by die kantoor van die Geregsbode, Parkstraat 40, Randfontein, nagesien word.

Die Eiser is bereid om 'n verband aan 'n goedgekeurde koper toe te staan.

G. H. Wiggill, vir Truter Crous & Wiggill, Eiser se Prokureurs, Jurisgebou, Sutherlandstraat, Posbus 110, Randfontein, 12/8/80.

KRUGERSDORP.—Case 7479/80: Midwest Properties No. 159 (Pty) Ltd, Plaintiff, and Charles van Niekerk, Defendant.

In execution of a judgment of the Supreme Court of South Africa (Witwatersrand Local Division), in the above-mentioned suit, a sale without reserve will be held at the offices of the Deputy Sheriff, First Floor, Minerva Buildings, 65 Ockerse Street, Krugersdorp, on Thursday, 18/9/80 at 10h00, of the undermentioned property of the Defendant on the conditions to be read out by the auctioneer at the time of the sale and which conditions may be inspected at the offices of the Deputy Sheriff, Krugersdorp, prior to the sale:

Certain Erf 159, Township of Chamdor Extension 1, Registration Division IQ, Tvl, measuring 7 705 square metres, known as 46 Fransen Street, Chamdor, District of Krugersdorp.

The following information is furnished re the improvements, though in this respect nothing is guaranteed:

Factory premises and outbuildings.

Terms.—10 per cent of the purchase price and 2½ per cent auctioneer's charges (minimum R20) in cash on the day of the sale, the balance against transfer to be secured by

a bank or building society or other acceptable guarantee to be furnished within 14 days from the date of sale.

Van Jaarsveld, Vickers & Rootenberg, Plaintiff's Attorneys, First Floor, Merlin House, 51 Van Wyk Street, P.O. Box 149, Roodepoort, 29/7/80.

JOHANNESBURG.—Saak 5985/80: Barclays-Nasionale Bank Bpk., Eiser, teen Solsam Investments (Edms.) Bpk., p/a Mnre Horwath, Schnaid, Hurwitz & Vennote, Pleinstraat 51, 19de Verdieping, North City, Johannesburg, Verweerder.

Ter uitwinning van 'n vonnis van die Hooggeregshof van Suid-Afrika (Witwatersrandse Plaaslike Afdeling) in bogemelde saak, sal 'n verkoping met 'n reserweprys van R12 709,77 gehou word ten kantore van die Adjunk-balju, Delvers Square, hoek van Delvers- en Kerkstraat, Johannesburg, op Dinsdag, 16/9/80 om 11h00, van die ondervermelde eiendom van die Verweerder op die voorwaardes wat deur die vendu-afslaer gelees sal word ten tye van die verkoping en welke voorwaardes by die kantore van die Adjunk-balju, Johannesburg, voor die verkoping ter insae sal lê:

Erf 2800, Glenvista-uitbreiding 5, Registrasieafdeling IR, Tvl., groot 1 222 vierkante meter, gehou deur die Verpandgewer onder Titelakte T16645/1976.

Die volgende inligting word verskaf insake verbeteringe, alhoewel geen waarborg in verband daarmee gegee kan word nie:

Terme.—10 persent van die koopprys en 2½ persent vendukoste (minimum R20), in kontant op die dag van die verkoping en die balans teen registrasie van transport. Ten opsigte van die balans moet 'n bank- of bougenootskap- of ander aanneembare waarborg binne 14 dae vanaf datum van verkoping verskaf word.

Smit & Papenfus, Eiser se Prokureur, Agste Verdieping, National Boardgebou, Pritchardstraat 94, Johannesburg, 7/8/80.

MEYERTON.—Saak 603/79. Landdroshof, Vereeniging: Die Stadsraad van Meyerton, Eiser, en Hans Tischhauser, Verweerder.

Ingevolge vonnis van die Landdroshof van Meyerton en lasbrief vir eksekusie, gedateer 18/2/80, sal die volgende eiendomme op Vrydag, 19/9/80 om 10h00, by die kantoor van die Geregsbode, Lochstraat, Meyerton, aan die hoogste bieder verkoop word:

Erf 49, Golf Park, 1 190 vierkante meter; Erf 420, Golf Park, 1 190 vierkante meter; Erf 427, Golf Park, 1 190 vierkante meter; Erf 428, Golf Park, 1 190 vierkante meter; Erf 429, Golf Park, 1 190 vierkante meter; Erf 430, Golf Park, 1 190 vierkante meter; Erf 433, Golf Park, 1 190 vierkante meter; Erf 434, Golf Park, 1 190 vierkante meter; Erf 436, Golf Park, 1 190 vierkante meter; Erf 437, Golf Park, 1 190 vierkante meter; Erf 438, Golf Park, 1 190 vierkante meter; Erf 439, Golf Park, 1 190 vierkante meter; Erf 447, Golf Park, 1 139 vierkante meter; en Erf 499, Golf Park, 1 190 vierkante meter.

(1) Die eiendomme sal voetstoots verkoop word aan die hoogste bieder en sonder reserwe, en die verkoping sal onderhewig wees aan die reëls en regulasies van die Wet op Landdroshowe en die titelaktes.

(2) Die koopprys sal betaalbaar wees as volg:

In kontant onmiddellik na ondertekening van die verkoopvoorwaardes, 10 persent van die koopprys of R200, watter bedrag ookal die grootste is en die balans van die koopprys binne 14 dae daarna in kontant of verseker te word deur die lewering van 'n bevredigende bank- of bouvereniging-waarborg.

(3) Die volle verkoopvoorwaardes sal ter insae lê by die kantoor van die Geregsbode te Lochstraat 6, Meyerton, en sal deur hom uitgelees word by aanvang van verkoping.

(4) Al die eiendomme is onverbeterd.

Meyerton, 5/8/80.

J. N. J. van Vuuren, vir Van Vuuren Gray & Odendaal, Prokureur vir Eiser, Volkskasgebou, Lochstraat, Posbus 208, Meyerton, 1960.

MEYERTON.—Saak 1171/79. Landdroshof, Vereeniging: Stadsraad van Meyerton, Eiser, en Wesdrif Dorpsgebiede (Edms.) Bpk., Verweerder.

Ingevolge vonnis van die Landdroshof van Meyerton en lasbrief vir eksekusie, gedateer 13/2/80, sal die ondervermelde eiendom op Vrydag, 19/9/80 om 10h00, by die kantoor van die Geregsbode, Lochstraat 6, Meyerton, aan die hoogste bieder verkoop word:

Erf 641, geleë in die dorp Meyerton-uitbreiding 3, Registrasieafdeling IR, Tvl., groot 2 552 vierkante meter.

(1) Die eiendom sal voetstoots verkoop word aan die hoogste bieder en sonder reserwe, en die verkoping sal onderhewig wees aan die reëls en regulasies van die Wet op Landdroshowe en die titelaktes.

(2) Die koopprys sal betaalbaar wees as volg:

In kontant onmiddellik na ondertekening van die verkoopvoorwaardes, 10 persent van die koopprys of R200 watter bedrag ookal die grootste is en die balans van die koopprys binne 14 dae daarna in kontant of verseker te word deur die lewering van bevredigende bank- of bouvereniging-waarborg.

(3) Die volle verkoopvoorwaardes sal ter insae lê by die kantoor van die Geregsbode te Lochstraat 6, Meyerton, en sal deur hom uitgelees word by aanvang van verkoping.

(4) Die eiendom is onverbeterd.

Meyerton, 5/8/80.

J. N. J. van Vuuren, vir Van Vuuren Gray & Odendaal, Prokureur vir Eiser, Volkskasgebou, Lochstraat, Posbus 208, Meyerton.

MEYERTON.—Saak 1046/79. Landdroshof, Vereeniging: Stadsraad van Meyerton, Eiser, en D. J. van Tonder, Verweerder.

Ingevolge vonnis van die Landdroshof van Meyerton en lasbrief vir eksekusie gedateer 13/2/80, sal die ondervermelde eiendom op Vrydag, 19/9/80 om 10h00, by die kantoor van die Geregsbode, Lochstraat 6, Meyerton, aan die hoogste bieder verkoop word:

Erf 1, geleë in die dorp Golf Park, Registrasieafdeling IR, Tvl., groot 1 501 vierkante meter.

(1) Die eiendom sal voetstoots verkoop word aan die hoogste bieder en sonder reserwe, en die verkoping sal onderhewig wees aan die reëls en regulasies van die Wet op Landdroshowe en die titelaktes.

(2) Die koopprys sal betaalbaar wees as volg:

In kontant onmiddellik na ondertekening van die verkoopvoorwaardes, 10 persent van die koopprys of R200 watter bedrag ookal die grootste is en die balans van die koopprys binne 14 dae daarna in kontant of verseker te word deur die lewering van 'n bevredigende bank- of bouvereniging-waarborg.

(3) Die volle verkoopvoorwaardes sal ter insae lê by die kantoor van die Geregsbode te Lochstraat 6, Meyerton, en sal deur hom uitgelees word by aanvang van verkoping.

(4) Die eiendom is onverbeterd.

Meyerton, 5/8/80.

J. N. J. van Vuuren, vir Van Vuuren Gray & Odendaal, Prokureur vir Eiser, Volkskasgebou, Lochstraat, Posbus 208, Meyerton.

MEYERTON.—Saak 246/80. Landdroshof, Vereeniging: Stadsraad van Meyerton, Eiser, en Garthmad Investments (Pty) Ltd, Verweerder.

Ingevolge vonnis van die Landdroshof van Meyerton en lasbrief vir eksekusie gedateer 20/6/80, sal die ondervermelde eiendom op Vrydag, 19/9/80 om 10h00, by die kantoor van die Geregsbode, Lochstraat 6, Meyerton, aan die hoogste bieder verkoop word:

Erf 68, geleë in die dorp Noldick, Registrasieafdeling IR, Tvl., groot 1 004 vierkante meter.

(1) Die eiendom sal voetstoots verkoop word aan die hoogste bieder en sonder reserwe, en die verkoping sal onderhewig wees aan die reëls en regulasies van die Wet op Landdroshowe en die titelaktes.

(2) Die koopprys sal betaalbaar wees as volg:

In kontant onmiddellik na ondertekening van die verkoopvoorwaardes, 10 persent van die koopprys of R200 watter bedrag ookal die grootste is en die balans van die koopprys binne 14 dae daarna in kontant of verseker te word deur die lewering van 'n bevredigende bank- of bouvereniging-waarborg.

(3) Die volle verkoopvoorwaardes sal ter insae lê by die kantoor van die Geregsbode te Lochstraat 6, Meyerton, en sal deur hom uitgelees word by aanvang van verkoping

(4) Die eiendom is onverbeterd.

Meyerton, 5/8/80.

J. N. J. van Vuuren, vir Van Vuuren Gray & Odendaal, Prokureur vir Eiser, Volkskasgebou, Lochstraat, Posbus 208, Meyerton.

MEYERTON.—Saak 171/80. Landdroshof Vereeniging: Stadsraad van Meyerton, Eiser en mev. C. L. Doherty, Verweerder.

Ingevolge vonnis van die Landdroshof van Meyerton en lasbrief vir eksekusie gedateer 18/6/80, sal die ondervermelde eiendom op Vrydag, 19/9/80 om 10h00, by die kantoor van die Geregsbode, Lochstraat 6, Meyerton, aan die hoogste bieder verkoop word:

Erf 518, geleë in die dorp Golf Park, Registrasieafdeling IR, Tvl., groot 1 127 vierkante meter.

(1) Die eiendom sal voetstoots verkoop word aan die hoogste bieder en sonder reserwe, en die verkoping sal onderhewig wees aan die reëls en regulasies van die Wet op Landdroshowe en die titelaktes.

(2) Die koopprys sal betaalbaar wees as volg:

In kontant onmiddellik na ondertekening van die verkoopvoorwaardes, 10 persent van die koopprys of R200, watter bedrag ookal die grootste is en die balans van die koopprys binne 14 dae daarna in kontant of verseker te word deur die lewering van 'n bevredigende bank- of bouvereniging-waarborg.

(3) Die volle verkoopvoorwaardes sal ter insae lê by die kantoor van die Geregsbode te Lochstraat 6, Meyerton, en sal deur hom uitgelees word by aanvang van verkoping.

(4) Die eiendom is onverbeterd.

Meyerton, 5/8/80.

J. N. J. van Vuuren, vir Van Vuuren Gray & Odendaal, Prokureur vir Eiser, Volkskasgebou, Lochstraat, Posbus 208, Meyerton.

LYDENBURG.—Case 2341/80. Magistrate's Court, Nelspruit: South African Permanent Building Society, Plaintiff, and Daniël Abraham Louw, Defendant.

In pursuance of a judgment in the Court of the Magistrate of Nelspruit, and a writ of execution dated 24/6/80, the following will be sold in execution on Friday, 26/9/80 at 09h30, in front of the Magistrate's Court, Lydenburg, to the highest bidder:

Portion 3 (a portion of Portion 1) of Erf 154, situate in the Town Lydenburg, Registration Division JT, Tvl, measuring 1 115 square metres, and situate at 11 Potgieter Street, Lydenburg.

Improvements reported (which are not warranted to be correct and are not guaranteed): Dwelling-house with outbuildings.

Conditions of sale.—1. The sale shall, in all respects, be governed by the Magistrates' Courts Act, 1944, as amended, and the rules made thereunder or any amendment thereof or substitution therefor and, subject thereto, the property shall be sold voetstoots to the highest bidder, without reserve.

2. The further conditions of sale are set out in a proposed deed of sale which is open for inspection during normal office hours at the office of the Messenger of the Court, Lydenburg, and at the offices of the undermentioned.

Van Vuuren, Van Rensburg & Partners, Plaintiff's Attorneys, Second Floor, Permanent Buildings, Brown Street, P.O. Box 173, Nelspruit, 28/7/80.

NIGEL.—Saak 28909/78. Landdroshof, Pretoria: Devon Health Committee, Eiser, en Branco Precision Engineering (Pty) Ltd, Verweerder.

Ingevolge 'n vonnis van bogenoemde Agbare Hof teen bogenoemde Verweerder, toegestaan op 6/10/78, en 'n lasbrief vir eksekusie, gedateer 7/11/78, sal die volgende eiendomme op 18/9/80 om 10h00 voor die Landdroshof, Courtlaan, Nigel, in eksekusie, sonder voorbehoud van regte, aan die hoogste bieder verkoop word:

Erwe 52, 349 en 350, Devon.

Daar is geen verbeterings op bogenoemde vakante erwe nie.

Verkoopvoorwaardes.—1. 10 persent van die koopprys sal op die dag van die verkoping betaal moet word en die onbetaalde balans sal betaal of gewaarborg word deur 'n goedgekeurde bank- of bougenootskapwaarborg, binne 14 dae vanaf datum van die verkoping.

2. Die volledige verkoopvoorwaardes sal ter insae lê by die kantoor van die Geregsbode Devon, te Rhodeslaan 37, Dunnottar en sal onmiddellik voor die verkoping deur hom uitgelees word.

Pretoria, 14/8/80

MacRobert De Villiers & Hitge Ing., Prokureurs vir Skuldeiser, 61 Vierde Verdieping, Southern Lifegebou, Pretoriusstraat 233, Pretoria.

PRETORIA.—Saak 12189/78 Landdroshof, Pretoria: Rihana Beleggings (Edms.) Bpk., Eiser, en P. J. Ras, Verweerder.

Ingevolge 'n uitspraak van die Hof van die Landdros van Pretoria en lasbrief tot geregtelike verkoping, gedateer 10/8/78, sal die ondervermelde eiendom op Dinsdag, 16/9/80 om 10h00 by die Landdroskantoor, Pretoriusstraat, Pretoria, geregtelik verkoop word aan die hoogste bieder naamlik:

Sekere Gedeelte 9 van Erf 331, bekend as Jan Coetzeestraat 100, Jan Niemandpark, Pretoria, groot 844 vierkante meter, gehou kragtens Akte van Transport 5686/78.

Verbeterings.—Drie-slaapkamer klinkersteenhuis, met sit-eetkamer, kombuis, badkamer, motorhuis, bediendekamer, alhoewel niks hierin gewaarborg word nie

Voorwaardes.—10 persent van die koopprys in kontant. Die balans koopprys teen datum van registrasie van transport wat verseker moet word aan die Geregsbode deur 'n bevredigende bank- of bougenootskapwaarborg binne sewe dae na datum van koop aan die transportbesorgers. Die eiendom word voetstoots verkoop en onderhewig aan die voorwaardes soos vervat in die huidige of vroeëre titelaktes van gemelde eiendom die Eiser of Geregsbode gee geen uitdruklike of stilswyende waarborge aangaande die toestand van enige verbeterings op die eiendom of van die eiendom self nie.

Die voorwaardes wat onmiddellik voor die verkoping deur die Geregsbode gelees sal word lê by die kantoor van die Geregsbode, Pretoria-Oos, Salisburyhuis, Pretoria, ter insae of by die Eiser se prokureurs.

Pretoria, 5/8/80.

C. J. Naude W. R. Badenhorst & De Jager, Prokureurs vir Eiser, Velrahuis 40, Bureaulaan, Pretoria.

PRETORIA.—Case 11562/77 Supreme Court, Transvaal Provincial Division: South African Permanent Building Society, Plaintiff, and Silvio Ettore Paolo Simoncelli, Defendant.

In pursuance of a judgment of the above Court and writ of execution, dated 14/4/77, the undermentioned property will be sold in execution on Wednesday, 17/9/80, 10h00, at the offices of the Deputy Sheriff, Fifth Floor, Standard General House, 215 Proes Street, Pretoria, to the highest bidder:

Certain Portion 1 of Erf 70, situate in the Township of New Muckleneuk, Registration Division JR, Tvl, measuring 1 311 square metres, held by the Defendant under Deed of Transfer 12723/66, dated 12/5/66, known as 176 Veale Street, New Muckleneuk, Pretoria.

The following improvements are situate on the property, but in this respect nothing is guaranteed:

A dwelling-house built of brick under iron roof, with steel and herculite ceilings, and floors of wood and slasto, consisting of lounge, dining-room, breakfast-room, kitchen, scullery, bathroom, four bedrooms and a front veranda.

The outbuildings consist of three separate buildings, the first of which is built of brick under iron roof, with cement floors, consisting of garage, two servants' rooms, w.c., storeroom, tiled shower and toilet, with veranda.

The second outbuilding is built of brick under iron and asbestos roof, with cement floors and split-pole ceilings, comprising of three offices, store-room and veranda.

The third outbuilding is built of brick under iron roof, with cement floors, and contains two store-rooms. There is also a swimming pool with filter on the property.

The conditions of sale, which will be read immediately prior to the sale, are lying for inspection at the offices of the Deputy Sheriff, Fifth Floor, Standard General House, 215 Proes Street, Pretoria

Pretoria, 19/8/80

H. P. Jefferys, c/o Findlay & Niemeyer, Plaintiff's Attorneys, 335 Permanent Buildings, Paul Kruger Street, P.O. Box 801, Pretoria.

KEMPTON PARK.—Saak 2996/80. Landdroshof, Kempton Park: D. van Hierden, Eiser, en L. W. Bosschaart, Verweerder.

As gevolg van 'n vonnis van die Landdroshof, Kempton Park, en 'n lasbrief gedateer 5/6/80, sal die volgende eiendom verkoop word in eksekusie op 11/9/80 om 11h00, voor die Landdroshof, Monumentweg, Kempton Park:

Erf 337, geleë in die dorpsgebied Rhodesfield, Registrasieafdeling IR, Tvl., groot 1 190 vierkante meter.

Verkoopvoorwaardes.—1. Die gesegde eiendom sal verkoop word sonder voorbehoud, aan die hoogste bieder en die verkoping sal onderhewig wees aan die bepalings van die Landdroshofwet en reels daarvolgens neergelê en die voorwaardes van die akte van transport, asook die verkoopvoorwaardes waarna verwys word in paragraaf 4 hiervan.

2. Die verbeterings op die gemelde eiendom word as volg beskryf maar geen waarborg word in hierdie opsig gegee nie:

Woonhuis met gebruiklike buitegeboue.

3. Die koopprys is betaalbaar as volg:

R2 000 op die verkoping en die balans moet betaal of gewaarborg word met 'n goedgekeurde bank- of bougenootskapwaarborg binne 14 dae vanaf datum van koop.

4. Die volledige verkoopvoorwaardes sal deur die Geregsbode van hierdie Agbare Hof uitgelees word voor die verkoping en lê ook ter insae by sy kantore en by die kantoor van die Eiser se prokureurs.

J. J. Visser, p/a Slabbert & Visser, Eiser se Prokureurs, Derde Verdieping, Bybelhuis, Centrallaan 18, Posbus 47, Kempton Park.

ALBERTON.—Case 1603/80. Magistrate's Court, Alberton: Home Owners Mortgage Exchange (Pty) Ltd, Plaintiff, and P. J. G. Deheyder, Defendant.

In pursuance to a judgment in the Court for the Magistrate of Alberton and a warrant of execution, dated 13/6/80, the property listed hereunder will be sold in execution on Friday, 3/10/80 at 10h00, at 57 Charl Cilliers Avenue, Alberton, to the highest bidder:

Erf 1981, Brackenhurst Extension 2 Township, Registration Division IR, Tvl.

The following improvements are reported to be on the property, but nothing is guaranteed:

Single-storey brick under tile comprising lounge, dining-room, three bedrooms, kitchen, two bathrooms and w.c., and separate shower and w.c. with usual outbuildings.

The purchase price will be payable as to a deposit of 10 per cent in cash and the balance together with interest at 13 per cent per annum until date of registration of transfer within 14 days from date of sale, to be secured by the bank or building society guarantee. The full conditions of sale will be read immediately prior to the sale, and may be inspected at the office of the Messenger of the Court, Alberton.

Alberton, 8/8/80.

Jack Sherman, Attorney for Plaintiff, UBS Buildings, Second Floor, 24 Voortrekker Road, Alberton.

JOHANNESBURG.—Case 55259/78. Magistrate's Court, Johannesburg: City Council of Johannesburg, Plaintiff, and M. D. Gumede (adult male), Defendant.

In pursuance of a judgment in the Court of the Magistrate of Johannesburg and writ of execution dated 25/10/78, the following will be sold in execution on 26/9/80 at 10h00 in front of the Magistrate's Court, Fox Street, Johannesburg, to the highest bidder:

Stand 30, situate in the Township of Race Course, Registration Division IQ, Tvl, measuring 495 square metres, held by Mattheuss Daniel Gumede, under Deed of Transfer T17830/74, dated 10/9/74.

Conditions of sale.—1. The property shall be sold without reserve and to the highest bidder and shall be subject to the terms and conditions of the Magistrates' Courts Act and the rules made thereunder and of the title deeds in so far as these are applicable.

2. The following improvements on the property are reported but noth ng is guaranteed:

A vaca it stand.

3. *Terms.*—The purchaser shall pay 10 per cent of the purchase price in cash to the Messenger of the Court immediately after the sale, and the balance, together with interest thereon at the rate of 12 per cent per annum to date of registration of transfer, shall be paid to the Messenger of the Court within 60 days of the date of sale.

4. *Conditions.*—The full conditions of sale may be inspected at the office of the Messenger of the Court.

R. D. A. Johnson, of Moodie & Robertson, Plaintiff's Attorneys, Eighth Floor, 111 Commissioner Street, Johannesburg.

KAAP • CAPE

KRAAIFONTEIN.—Case 4476/80. Magistrate's Court, Bellville: South African Permanent Building Society, Plaintiff, and Leonard Donald, Defendant.

In the above matter a sale will be held on Wednesday, 17/9/80 at 11h00, at the site of 106 Victoria Road, Kraaifontein, being:

(a) Certain piece of land situate in the Municipality of Kraaifontein, Paarl Division, being Erf 6647, Kraaifontein, situate in Windsor Estate, measuring 744 square metres.

(b) Certain piece of land situate as above, being Erf 6646, Kraaifontein, measuring 744 square metres.

Conditions of sale.—1. The sale is subject to the terms and conditions of the Magistrates' Courts Act, No. 32 of 1944, the property being sold voetstoots and as it stands, and subject to the conditions of the existing title deed.

2. One-tenth of the purchase price shall be paid immediately after the property is declared to be sold and the balance of the purchase price together with interest thereon at the rate of 10 per cent per annum, is to be paid against registration of transfer, which shall be given and taken forthwith after the sale.

3. This property is reserved for the use of members of the White group.

4. The following improvements are on the property (although nothing in this respect is guaranteed):

A single storey brick dwelling under an asbestos roof comprising of a lounge, three bedrooms, kitchen, bathroom, single garage.

5. The complete conditions of sale will be read out at the time of the sale and may be inspected prior thereto at the offices of the Messenger of the Court, Bellville, and at the offices of the undersigned.

Minde Schapiro & Smith, Attorneys for Plaintiff, 49 Durban Road, Bellville.

PORT ELIZABETH.—Case 5317/80. Magistrate's Court, Port Elizabeth: Johanna Catherine Sampson, Plaintiff, and Ayesha Jaylarnie, First Defendant, and Melvin Tesner, Second Defendant.

In pursuance of a judgment granted by the Court of the Magistrate of Port Elizabeth, dated 20/3/80, and a warrant of execution dated 1/7/80, the following property will be sold in execution on 12/9/80 at 14h15, at the front entrance of the New Law Courts, Main Street, North End, Port Elizabeth.

Certain piece of land situate in the Municipality of the City of Port Elizabeth, Division of Port Elizabeth, being Erf 2154, Gelvandale, in Gelvandale Township, measuring 545 square metres, held by the Defendants under Deed of Transfer 30703, dated 18/11/71.

Improvements.—The following improvements are situate on the property, although in this respect nothing is guaranteed:

(a) A single-storey brick dwelling-house under iron roof.
(b) Outbuildings comprising garage, servant's room.

Terms and conditions.—1. Terms:

The purchase price shall be paid as to 10 per cent thereof together with the auctioneer's commission, on the date of the sale, and the unpaid balance together with interest thereon and all other charges as provided for in the conditions of sale, shall be paid or secured by a bank or building society guarantee, acceptable to the Plaintiff's attorneys, within 21 days of the date of sale.

2. *Conditions of sale.*—The full conditions of sale may be inspected prior to the date of sale at the offices of the Messenger of the Court, Port Elizabeth North, 8 Graham Street, North End, Port Elizabeth.

Port Elizabeth, 28/7/80.

Brown & Braude, Plaintiff's Attorneys, Second Floor, Medlaw House, 517/519 Main Street, Port Elizabeth.

Together in Excellence

WELLINGTON.—Saak 386/80. Landdroshof, Wellington: South African Permanent Building Society, Eksekusieskuldeiser, Michael William Hayward, Eksekusieskuldenaar.

In navolging van 'n vonnis van hierdie Agbare Hof, en 'n lasbrief van eksekusie, gedateer 11/6/80, sal die volgende eiendom op 17/9/80, om 10h00 te Landdroshof, Wellington, in eksekusie verkoop word aan die hoogste bod:

Seker eiendomsgrond geleë in die Munisipaliteit van Wellington, afdeling Paarl, synde Erf 4620, Wellington, in Wellingtondorpsgebied, Afdeling 31, groot 704 vierkante meter, gehou deur die Eksekusieskuldenaar ingevolge Transportaste 16856, gedateer 29/6/79, geleë te New Crossstraat 6, Uitsig, Wellington, met verbeteringe, naamlik woonhuis.

Verkoopvoorwaardes.—1. Die veiling is onderworpe aan die voorwaardes en bepalinge van die Wet op Landdroshowe, No. 32 van 1944, soos gewysig. Die eiendom word voetstoots verkoop, onderworpe aan die voorwaardes van die bestaande titelakte. Die hoogste bieder sal die koper wees, onderworpe aan die bepalinge van artikel 66 van bogenoemde Wet.

2. Een tiende van die koopprys moet in kontant of deur middel van 'n bankgewaarborgde tjek deur die koper betaal word onmiddellik nadat die eiendom as verkoop verklaar is. Die balans van die koopprys, tesame met rente daarop bereken teen die heersende bouverenigingkoers, moet teen registrasie van oordrag betaal word, en die koper moet binne 14 dae na die datum van verkoping 'n bank- of bouverenigingwaarborg vir die sodanige balans tesame met rente daarop, voorsien.

3. Die aandag word gevestig op die bepalinge van die Groepsgebiedewet, No. 36 van 1966, soos gewysig, asook die Gemeenskapsontwikkelingswet, No. 3 van 1966, soos gewysig, en dit is die koper se plig om binne 14 dae na die datum van verkoping die nodige bewys of permit te verkry wat sodanige koper in staat sal stel om die eiendom te bekom.

4. Voorts onderworpe aan verdere voorwaardes, wat tydens die veiling voorgelê sal word en wat ter insae lê by die kantoor van die Geregsbode, Wellington, en by die kantore van Gaum-Van Wyk, Hoofstraat 345, Paarl.

Paarl, 30/7/80.

Gaum-Van Wyk, Prokureurs vir Eksekusieskuldeiser, Hoofstraat 345, Paarl.

PORT ELIZABETH.—Case 11121/80, Magistrate's Court, Port Elizabeth: Allied Building Society, Plaintiff, and Maurice van der Merwe, Defendant.

In pursuance of judgment in the Court of the Magistrate at Port Elizabeth, dated 16/6/80, and the warrant of execution dated 18/6/80, the following property will be sold in execution without reserve to the highest bidder on 29/8/80 at 14h15, at the front entrance of the New Law Courts, North End, Port Elizabeth:

Certain freehold land, 59 Kent Road, North End, Port Elizabeth, being Erf 2295, North End, situate in the Municipality and Division of Port Elizabeth, measuring 171 square metres.

The following improvements on the property are reported, though in this respect nothing is guaranteed:

Completed dwelling-house with usual outbuildings.

The full conditions of sale may be inspected prior to the date of the sale at the offices of the Messenger of the Court, Port Elizabeth South.

Port Elizabeth, 4/8/80.

Rushmere Noach & Partners, per R. O. Jefferson, Plaintiff's Attorneys, First Floor, Allied Buildings, 93 Main Street, Port Elizabeth.

PAROW.—Case 6008/80, Magistrate's Court, Bellville: South African Permanent Building Society, Plaintiff, and Albertus Johannes Vivier, Defendant.

In the above matter, a sale will be held on Wednesday, 17/9/80 at 12h00, at the site of 8 Short Street, Glenlilly Estate, Parow, being:

Certain piece of redeemed quitrent land, being Portion 7 of Lots 1a to 9a, of Glenlilly Estate, situate in the Municipality of Parow, Cape Division (now known as Erf 6144, Parow), measuring 529 square metres.

Conditions of sale.—1. The sale is subject to the terms and conditions of the Magistrates' Courts Act, No. 32 of 1944, the property being sold voetstoots and as it stands, and subject to the conditions of the existing title deed.

2. One-tenth of the purchase price shall be paid immediately after the property is declared to be sold and the balance of the purchase price together with interest thereon at the rate of 10 per cent per annum is to be paid against registration of transfer, which shall be given and taken forthwith after the sale.

3. This property is reserved for the use of members of the White group.

4. The following improvements are on the property (although nothing in this respect is guaranteed):

A single-storey brick dwelling under a tiled roof comprising of four rooms, kitchen, bathroom, single garage, servant's room and outside w.c.

5. The complete conditions of sale will be read out at the time of the sale, and may be inspected prior thereto at the offices of the Messenger of the Court, Bellville, and at the offices of the undersigned.

Minde Schapiro & Smith, Attorneys for Plaintiff, 49 Durban Road, Bellville.

MONTAGU.—Saak 147/80. Landdroshof, Worcester: Allied Bouvereniging, Eiser, en Norman Datson, Verweerder.

Kragtens uitspraak van bogenoemde Hof en lasbrief vir eksekusie daarkragtens uitgereik, sal 'n verkoping sonder reserweprys gehou word deur die Geregsbode, Montagu, op 27/9/80 om 10h00, by die hoofingang van die Landdroskantoor, Montagu, van die volgende eiendom:

Seker stuk afgeskafte erfpaggrond, synde Erf 104, Ashton, in Ashtondorpsuitbreiding 2, geleë in die Munisipaliteit van Ashton, afdeling Montagu, groot 1 190 vierkante meter.

Die eiendom is verbeter deur die oprigting van 'n woonhuis maar geen waarborg daaromtrent kan gegee word nie, en die eiendom word in sy geheel voetstoots verkoop.

Terme.—10 persent van die koopprys in kontant op die dag van die verkoping en vir die balans moet 'n bank- of bouverenigingwaarborg binne 14 dae vanaf datum van verkoping aan die Geregsbode verskaf word. Die verkoping is verder onderhewig aan verkoopvoorwaardes wat ter insae by die Geregsbode, Montagu, en die Eiser se prokureurs beskikbaar is.

Muller, Terblanche & Beyers, Eiser se Prokureurs, Kerkstraat 71, Posbus 7, Worcester, 12/8/80.

PAARL.—Case 121/80. Magistrate's Court, Paarl: Allied Building Society, Judgment Creditor, and C. J. Jonker, Judgment Debtor.

In pursuance of a judgment of the above Honourable Court and a warrant of execution dated 29/1/80, the immovable property hereunder will be sold in execution on 24/9/80 at 10h00 at 3 St Augustine Avenue, St Elmo, N. Paarl, Paarl, to the highest bidder:

Certain piece of land situate in the Municipality and Administrative District of Paarl, being Erf 12327, Paarl, measuring 663 square metres, situate at 3 St Augustine Avenue, St Elmo, Noorder Paarl.

Conditions (inter alia) *of sale.*—1. The property will be sold to the highest bidder, subject to the Magistrates' Courts Act, No. 32 of 1944, as amended, and other regulations promulgated thereunder, and subject further to the conditions of title in so far as they may be applicable.

2. The purchaser shall pay 10 per cent of the purchase price in cash to the auctioneer, immediately after the sale, and the balance together with interest thereon at the rate of 10 per cent per annum to date of registration of transfer, within 14 days to be paid or secured by an approved bank or building society guarantee.

3. The purchaser shall pay all costs of transfer and other costs incidental thereto.

4. The remaining conditions of sale lie for inspection at the offices of the Messenger of the Court, Magistrate's Court, Paarl.

Paarl, 29/8/80.

Faure & Faure, Plaintiff's Attorneys, 210 Main Street, P.O. Box 20, Paarl.

QUEENSTOWN.—Case 549/80. Supreme Court, Eastern Cape Division: Standard Credit Corporation Ltd, Applicant, and T. de Kriek (J. de Kriek), Respondent.

Pursuant to a writ of execution dated 29/5/80, the Deputy Sheriff will sell to the highest bidder, at the Magistrate's

University of Pretoria
Together in Excellence

Court, Queenstown, at 10h00, on 18/9/80, the hereinafter-mentioned properties:

1. Certain freehold land situated in the Municipality and Division of Queenstown, being Erf 1750, Queenstown, measuring 1 592 square metres, held as per Deed of Transfer 14847, dated 13/6/79, situated at 11 Chamberlain Street, Queenstown.

2. Certain land situated in the Municipality and Division of Queenstown, being Erf 1269, Queenstown, measuring 1 011 square metres, held as per Deed of Transfer 7801, dated 6/4/77, situated at 8 Komani Street, Queenstown.

The conditions of sale may be inspected at the office of the Deputy Sheriff, Queenstown.

Grahamstown, 5/8/80.

M. W. Randell, for Neville Borman & Botha, Plaintiff's Attorneys, Guardian Buildings, High Street, Grahamstown.

ATHLONE.—Case 15963/79. Magistrate's Court, Cape Town: Western Province Sales (Pty) Ltd, Plaintiff, and M. Y. Begg, Defendant.

In execution of the judgment of the Magistrate's Court, Cape Town, held at The Cape, on 20/12/79, in the above matter, a sale will be held on Monday, 5/9/80 at 10h00 at 56 Olifant Road, Primrose Park, Athlone, of the below-mentioned immovable property which is hereby sold in execution:

Certain piece of land situate in the City of Cape Town, Cape Division, being Erf 40629, Cape Town at Athlone in Athlone Township Extension 8, measuring 496 square metres, held by the Defendant under Deed of Transfer 25467, dated 11/10/78, bonded to and in favour of the Cape of Good Hope Savings Bank under Bond 20756, dated 11/10/78, and comprising a house built of bricks under tiled roof consisting of lounge, five bedrooms, kitchen, two toilets, bathroom, double garage and two store-rooms.

Conditions of sale.—1. The sale is subject to the terms and conditions of the Magistrates' Courts Act, No. 32 of 1944, the property being sold voetstoots and as it stands and subject to the conditions of the existing title deeds. The highest bidder shall be the purchaser, subject to the provisions of section 66 of the above act.

2. One-tenth of the purchase price shall be paid in cash or by means of a bank marked cheque and immediately after the property is declared to be sold and the balance of the purchase price, together with interest thereon at the ruling building society rate to be paid against registration of transfer, and received within 14 days after the date of sale by a bank or building society guarantee.

3. Attention is drawn to the provisions of the Group Areas Act, No 77 of 1957, as amended, and also Act 69 of 1955, as amended, and the onus shall be on the purchaser to obtain the necessary proof or permit enabling such purchaser to acquire the property within 14 days of the date of sale.

And subject to further conditions which will be read out at the time of the sale and which may be inspected at the offices of the Messenger of the Court, Wynberg, who are the auctioneers in this sale.

Watkin & Kaplan, Plaintiff's Attorneys, 508 Fairbairn House, 140 St George's Street, Cape Town.

GRASSY PARK.—Case 1706/80. Supreme Court, Cape of Good Hope Provincial Division: Rahmatwar Muslim Society of Karjie, and Noel George Wood (N.O.), in his capacity as administrator of the estate of the late Arthur Cox Matthews, Plaintiffs, and Lily Johanna Echardt, born Bosch, widow, Defendant.

Pursuant of a judgment in the above Honourable Court on 5/3/80, and writ of execution of 8/7/80, the following will be sold in execution on 18/9/80 at Rexton, Perth Road, Grassy Park, Cape Province, at 11h00 to the highest bidder:

Certain piece of land situate in the Local Area of Grassy Park, Cape Division, being Erf 1609, Grassy Park at Grassy Park, measuring 510 square metres, held under and by virtue of Deed of Transfer 34767, dated 15/10/74.

(1) The property shall be sold to the highest bidder and shall be subject to the terms and conditions of sale in execution filed of record in the office of the Deputy Sheriff, Wynberg, Cape Province.

(2) The property is sold subject to the title deed and diagram appertaining to the property and to any servitude and conditions contained in the title deed.

(3) The purchase price shall be paid as to a deposit of 10 per cent of the purchase price in cash on the date of sale and the unpaid balance against transfer to be secured by a bank or building society guarantee to be approved by the Plaintiffs' attorneys and to be furnished to the Deputy Sheriff within 21 days of the date of sale.

(4) The full conditions of sale may be inspected at the office of the Deputy Sheriff, 106 Maynard House, Maynard Road, Wynberg, Cape Province.

Ince & Wood, Plaintiffs' Attorneys, 14th Floor, Reserve Bank Buildings, 30 Hout Street, Cape Town.

KRAAIFONTEIN.—Case 14624/79. Supreme Court, Cape of Good Hope Provincial Division: Electroparts (Pty) Ltd, Plaintiff, and Alexander Francis Third, First Defendant, and John Nothnagel, Second Defendant.

In execution of a judgment in the Supreme Court of South Africa (Cape of Good Hope Provincial Division), in the above-mentioned matter, a sale in execution of the undermentioned property will be held on Wednesday, 17/9/08 at 10h30, at 10 Balfour Street Kraaifontein, to the highest bidder, subject to the conditions as hereinafter set out and subject to the further conditions to be read out by the auctioneer at the sale:

Certain piece of land situate in Scottville Estate in the Municipality of Kraaifontein, Administrative District of Paarl, being Erf 5322, a portion of Erf 448, Kraaifontein, measuring 496 square metres, held by the above-mentioned First Defendant under Deed of Transfer 2544, dated 4/2/70.

The following information is tendered without any guarantee:

This property is situated at Kraaifontein, comprising of a private dwelling.

Conditions of payment.—10 per cent of the purchase price of the said property in cash is payable on the day of the sale and the balance of the purchase price against registration of transfer. The purchaser shall within 14 days of the date of sale furnish the Plaintiff with a guarantee to the satisfaction of the Plaintiff's attorneys for the due payment of the balance of the purchase price, interest and transfer costs and the due fulfilment of all the purchaser's obligations under the conditions of sale.

The purchaser shall pay the auctioneer's commission to the Deputy Sheriff immediately after the sale.

Conditions of sale.—The further conditions of sale may be inspected at the offices of the Deputy Sheriff of Bellville at Bellraye Arcade, 39 Durban Road, Bellville.

Cape Town, 11/8/80.

J. H. Katz, for Miller Gruss Katz & Traub, Plaintiff's Attorneys, 2618 Trust Bank Centre, Heerengracht, Cape Town.

UITENHAGE.—Case 1295/80. Magistrate's Court, Uitenhage: E. P. Timbers (Pty) Ltd, Plaintiff, and P. J. van Rooyen (Petrus Jacobus), Defendant.

In pursuance of a judgment in the Court of the Magistrate of Uitenhage, dated 26/3/80, the Messenger of the Court will sell at the front entrance of the Magistrate's Court House, Uitenhage, at 15h00 on Thursday, 25/9/80 a brick dwelling-house situate at 26 Langenhoven Street, Uitenhage, on Erf 5796, in the Municipality and Division of Uitenhage, measuring 1 264 square metres.

Material conditions.—1. Price to be paid in cash or suitably guaranteed;

2. occupation by arrangement;

3. full conditions may be inspected at Messenger's office.

Uitenhage, 18/8/80.

Davel, Hamilton & Co., Attorneys for Plaintiff, Ground Floor, S.A. Permanent Centre, Republic Square, Uitenhage.

NATAL

STANGER.—Case 11711/80. Supreme Court, Durban and Coast Local Division: South African Permanent Building Society, Execution Creditor, and Pooranlall Harisunker, Execution Debtor.

In pursuance of a judgment in the Supreme Court of South Africa, Durban and Coast Local Division, dated 22/5/80 and a writ of execution issued thereafter, the immovable

property lifted hereunder will be sold in execution on 12/9/80 at 10h00, at the front entrance to the Magistrate's Court Buildings, Stanger, to the highest bidder:

Lot 1761, Stanger (Extension 19), situate in the Borough of Stanger, County of Victoria, Province of Natal, in extent 1 000 square metres.

Postal address.—Lot 1761, being a dwelling at Kew Road, Stanger.

Improvements (but nothing is guaranteed in respect thereof): Brick and tile dwelling comprising three bedrooms, kitchen, toilet, lounge dining-room, bathroom.

1. The sale shall be subject to the terms and conditions of the Supreme Courts Act and the rules made thereunder.
2. No bid will be accepted by or on behalf of a person who is not a member of the Indian group and the purchaser (other than the Execution Creditor), shall pay a deposit of 10 per cent of the purchase price in cash at the time of the sale.
3. The balance of the purchase price is payable against transfer to be secured by a bank or building society guarantee approved by the Execution Creditor's attorneys and to be furnished within 14 days after the date of sale.
4. The purchaser shall be liable for the payment of interest at the rate of 9,5 per cent per annum to the Execution Creditor from date of sale to date of registration of transfer.
5. Transfer shall be effected by the attorneys for the Execution Creditor and the purchaser shall pay all transfer costs, including arrear and current rates, sewerage connection fees (if any), taxes and other charges necessary to effect transfer on request by the said attorneys.
6. The full conditions of sale may be inspected at the offices of the Deputy Sheriff, 22 Jackson Street, Stanger, and interested parties are asked to contact the Execution Creditor who may be prepared to grant loan facilities to an approved purchaser.

Durban, 5/8/80.

Clemmans & Johnston Inc., Execution Creditor's Attorneys, 201 Permanent Buildings, 343 Smith Street, Durban.

STANGER.—Case 11712/80. Supreme Court, Durban and Coast Local Division: South African Permanent Building Society, Execution Creditor, and Sivanathan Covenden, Execution Debtor.

In pursuance of a judgment in the Supreme Court of South Africa, Durban and Coast Local Division, dated 22/5/80 and a writ of execution issued thereafter, the immovable property listed hereunder will be sold in execution on 12/9/80 at 10h00, at the entrance of the Magistrate's Court Buildings, Stanger, to the highest bidder:

Lot 1512, Stanger (Extension 19), situate in the Borough of Stanger, County of Victoria, Province of Natal, in extent 757 square metres.

Postal address.—50 Tulip Road, Stanger.

Improvements (but nothing is guaranteed in respect thereof): Brick and tile dwelling comprising three bedrooms, kitchen, lounge, toilet and bathroom.

1. The sale shall be subject to the terms and conditions of the Supreme Courts Act and the rules made thereunder.
2. No bid will be accepted by or on behalf of a person who is not a member of the Indian group and the purchaser (other than the Execution Creditor) shall pay a deposit of 10 per cent of the purchase price in cash at the time of the sale.
3. The balance of the purchase price is payable against transfer to be secured by a bank or building society guarantee approved by the Execution Creditor's attorneys and to be furnished within 14 days after the date of sale.
4. The purchaser shall be liable for the payment of interest at the rate of 9,75 per cent per annum to the Execution Creditor from date of sale to date of registration of transfer.
5. Transfer shall be effected by the attorneys for the Execution Creditor and the purchaser shall pay all transfer costs, including arrear and current rates, sewerage connection fees (if any), taxes and other charges necessary to effect transfer on request by the said attorneys.
6. The full conditions of sale may be inspected at the offices of the Deputy Sheriff, 22 Jackson Street, Stanger, and interested parties are asked to contact the Execution Creditor who may be prepared to grant loan facilities to an approved purchaser.

Durban, 4/8/80.

Clemmans & Johnston Inc., Execution Creditor's Attorneys, 201 Permanent Buildings, 343 Smith Street, Durban.

PIETERMARITZBURG. — Case 2424/80. Magistrate's Court, Pietermaritzburg: Collector of Rates and City Treasurer, Plaintiff, and Ebrahim Holdings (Pty) Ltd, Defendant.

In pursuance of a judgment in the Court of the Magistrate of Pietermaritzburg and a warrant of execution dated 21/3/80, the immovable property listed hereunder will be sold in execution on 29/9/80 at 10h00, on the steps of the Magistrate's Court, Commercial Road, Pietermaritzburg, to the highest bidder:

Subdivision 3 of Lot 62, Church Street, situate in the City and County of Pietermaritzburg, Province of Natal, in extent 723 square metres.

The said property is improved land with a shopping and flats complex and while this information is given in good faith, no guarantees are given.

The said property is known as 539 Church Street, Pietermaritzburg, and is occupied by members of the Indian group.

Terms.—10 per cent deposit in cash on the date of sale, balance against transfer, secured by an approved bank or building society guarantee.

Conditions of sale may be inspected during ordinary business hours at the office of the Messenger of the Court, Pietermaritzburg, Natal.

Pietermaritzburg, 8/8/80.

Mason Buchan & Co., Plaintiff's Attorneys, Eighth Floor, NBS City Centre, Church Street, Pietermaritzburg.

PORT SHEPSTONE.—Case 1306/80. Magistrate's Court, Port Shepstone: In the ex parte application of The Collector of Rates for the Bendigo Town Board, Applicant, and estate S. N. Naidoo, Respondent.

In pursuance of an order of the above Court, granted on 22/7/80, in terms of section 172 (10) of the Local Authorities Ordinance, No. 21 of 1974, the undermentioned property will be sold by public auction to the highest bidder by the Messenger of the Court, Port Shepstone, in front of the Magistrate's Court, Port Shepstone, at 10h00 on Friday, 19/9/80, namely:

Lot 8, Sea Park, in the Bendigo Town Board Area.

The conditions of sale will be read out immediately prior to the sale or may be inspected at the office of the Messenger of the Court, Port Shepstone.

Kent & Kent, Attorneys for The Collector of Rates, 1-5 Standard Bank Buildings, Marine Drive, P.O. Box 205, Margate.

PORT SHEPSTONE.—Case 1307/80. Magistrate's Court, Port Shepstone: In the ex parte application of The Collector of Rates for the Bendigo Town Board, Applicant, and Mrs A. L. Wilkes, Respondent.

In pursuance of an order of the above Court, granted on 22/7/80, in terms of section 172 (10) of the Local Authorities Ordinance, No. 25 of 1974, the undermentioned property will be sold by public auction to the highest bidder by the Messenger of the Court, Port Shepstone, in front of the Magistrate's Court, Port Shepstone, at 10h00 on Friday, 19/9/80, namely:

Lot 893, Southport, in the Bendigo Town Board Area.

The conditions of sale will be read out immediately prior to the sale or may be inspected at the office of the Messenger of the Court, Port Shepstone.

Kent & Kent, Attorneys for the Collector of Rates, 1-5 Standard Bank Buildings, Marine Drive, P.O. Box 205, Margate.

PORT SHEPSTONE.—Case 1304/80. Magistrate's Court, Port Shepstone: In the ex parte application of The Collector of Rates for the Bendigo Town Board, Applicant, and estate S. N. Naidoo, Respondent.

In pursuance of an order of the above Court, granted on 22/7/80, in terms of section 172 (10) of the Local Authorities Ordinance, No. 25 of 1974, the undermentioned property will be sold by public auction to the highest bidder by the

Messenger of the Court, Port Shepstone, in front of the Magistrate's Court, Port Shepstone, at 10h00 on Friday, 19/9/80, namely:

Lot, 15, Sea Park, in the Bendigo Town Board Area.

The conditions of sale will be read out immediately prior to the sale or may be inspected at the office of the Messenger of the Court, Port Shepstone.

Kent & Kent, Attorneys for The Collector of Rates, 1–5 Standard Bank Buildings, Marine Drive, P.O. Box 205, Margate.

PORT SHEPSTONE.—Case 1305/80. Magistrate's Court, Port Shepstone: In the ex parte application of The Collector of Rates for the Bendigo Town Board, Applicant, and estate S. N. Naidoo, Respondent.

In pursuance of an order of the above Court, granted on 22/7/80, in terms of section 172 (10) of the Local Authorities Ordinance, No. 25 of 1974, the undermentioned property will be sold by public auction to the highest bidder by the Messenger of the Court, Port Shepstone, in front of the Magistrate's Court, Port Shepstone, at 10h00 on Friday, 19/9/80, namely:

Lot 9, Sea Park, in the Bendigo Town Board Area.

The conditions of sale will be read out immediately prior to the sale or may be inspected at the office of the Messenger of the Court, Port Shepstone.

Kent & Kent, Attorneys for The Collector of Rates, 1–5 Standard Bank Buildings, Marine Drive, P.O. Box 205, Margate.

MTUNZINI.—Case 11399/80. Supreme Court, Durban and Coast Local Division: Mafeking Creamery Ltd, Plaintiff, and J. P. Retief, Defendant.

In pursuance of judgment in the Durban Supreme Court and warrant of execution dated 14/5/80, the goods listed hereunder will be sold in execution on Friday, 5/9/80 at 10h00 at the office of the Deputy Sheriff, 16 Hulley Avenue, Mtunzini, for cash to the highest bidder, purchaser taking all risks:

Inventory.—Camping trailer, Super S. meat saw, mist sprayer (Solo), seed planter, workbench, Wolf electric drill, AEC angle grinder, three tool boxes with assorted tools and four steel lockers.

Deputy Shriff, P.O. Box 50, Mtunzini, 3867.

DURBAN.—Case 41895/79. Magistrate's Court, Durban: Provincial Building Society of South Africa, Plaintiff, and Shobha, First Defendant, and Vinesh Rajkumar Ramdass, Second Defendant.

In pursuance of a judgment in the Court of the Magistrate of Durban, dated 6/2/80, and a writ of execution dated 8/5/80, the following property will be sold in execution on 18/9/80 at 10h00 at the front of the Magistrate's Court, Somtseu Road, Durban, to the highest bidder:

Subdivision 1864 (of 1212) of the farm Zeekoe Vallei 787, situate in the City of Durban, County of Victoria, Province of Natal, in extent 465 square metres, held by the Second Defendant under Deed of Transfer T10216/1979, dated 28/6/79.

Postal address.—95 Mypark Drive, Parklock.

Improvements.—Brick under tile dwelling, comprising three bedrooms, bathroom, separate toilet, kitchen, lounge/dining-room, garage and veranda.

Nothing is guaranteed in these respects.

1. The property shall be sold without reserve and to the highest bidder and shall be subject to the terms and conditions of the Magistrates' Courts Act and the rules made thereunder and of the title deeds, in so far as these are applicable.

2. The purchaser shall pay 10 per cent of the purchase price in cash on the day of the sale and the balance shall be paid or secured by a satisfactory bank or building society guarantee, to be approved by the Plaintiff's attorneys, to be furnished to the Court Messenger, Durban North, within 14 days of the date of sale.

3. Attention of the prospective purchasers is directed to the provisions of the Group Areas Act.

4. Transfer shall be effected by the attorneys for the Plaintiff and the purchaser shall pay all transfer dues, including transfer duty, current rates, taxes and other charges necessary to effect transfer upon request by the said attorneys.

The full conditions of sale may be inspected at the office of the Messenger of the Court, Durban North, First Floor, 17/19 Mona Road, Durban.

Durban, 31/7/80.

Berkowitz Kirkel Cohen Incorporated, Plaintiff's Attorneys, 15th Floor, Durban Bay House, 333 Smith Street, Durban.

DURBAN.—Case 11571/80. Magistrate's Court, Durban: United Building Society, Plaintiff, and Frans Lodewyk Conradie Munnik, Defendant.

In pursuance of a judgment granted on 29/4/80 in the Court of the Magistrate, Durban, and under a writ of execution issued thereafter, the immovable property listed hereunder will be sold in execution on 11/9/80 at 10h00, in front of the Magistrate's Court, Somtseu Road, Durban, to the highest bidder:

A certain piece of land being Subdivision 2102 of the farm Mobeni 13538, situate in the City and County of Durban, Province of Natal, in extent 616 square metres.

Postal address.—8 Pelham Road, Woodlands, Durban.

Improvements.—One brick under tile dwelling, comprising lounge, dining-room, kitchen, three bedrooms, to let and bathroom. Outbuildings: Brick under tile, servants' quarters, toilet and shower.

Nothing is guaranteed in these respects.

Material conditions.—1. The sale shall be subject to the terms and conditions of the Magistrates' Courts Act and the rules made thereunder.

2. The purchaser shall pay a deposit of 10 per cent of the purchase price in cash at the time of the sale, the balance against transfer to be secured by a bank or building society guarantee to be approved by the Plaintiff's attorneys to be furnished to the Court Messenger within 7 days after the date of sale.

3. The attention of all prospective purchasers is directed to the provisions of the Group Areas Act.

The full conditions may be inspected at the officec of the Messenger of the Court, Durban South, or at our offices.

G. P. Browne, for Browne Brodie & Co., Plaintiff's Attorneys, 12th Floor, United Buildings, 291 Smith Street, Durban.

VERULAM.—Case 3046/78. Magistrate's Court, Inanda: United Building Society, Plaintiff, and Barend Jacobus Johannes Muller, Defendant.

In pursuance of a judgment granted on 11/1/79, in the Court of the Magistrate, Verulam, and under a writ of execution issued thereafter, the immovable property listed hereunder will be sold in execution on 12/9/80 at 10h00, in front of the Magistrate's Court, Verulam, to the highest bidder:

A certain piece of land being Remainder of Lot 105, Glen Anil Township, situate in the Development Area of Glen Anil, County of Victoria, Province of Natal, in extent 1 062 square metres.

Postal address.—Highdale Road, Glen Anil.

Improvements.—Vacant land.

Nothing is guaranteed in these respects.

Material conditions.—1. The sale shall be subject to the terms and conditions of the Magistrates' Courts Act and the rules made thereunder.

2. The purchaser shall pay a deposit of 10 per cent of the purchase price in cash at the time of the sale, the balance against transfer to be secured by a bank or building society guarantee to be approved by the Plaintiff's attorneys to be furnished to the Court Messenger within seven days after the date of sale.

3. The attention of all prospective purchasers is directed to the provisions of the Group Areas Act.

The full conditions may be inspected at the offices of the Messenger of the Court, Verulam, or at our offices.

G. P. Browne, for Browne Brodie & Co., Plaintiff's Attorneys, c/o Rodney Rindel, 52 Moss Street, Verulam.

PORT SHEPSTONE.—Case 12420/80. Supreme Court, Durban and Coast Local Division. Umzimkulu Sugar Company Ltd, Plaintiff, and Alicedale Investment (Pty) Ltd, Defendant

In execution of a judgment of the Supreme Court of South Africa (Durban and Coast Local Division), in the abovementioned action, a sale with a reserve price of R45 000 will be held by the Deputy Sheriff of Port Shepstone at the Magistrate's Court, Port Shepstone, on Friday, 19/9/80 at 10h00 of the undermentioned properties of the Defendant (which properties shall be sold as a single entity) on the conditions to be read out by the auctioneer at the time of the sale:

Remainder of Lot 28, No. 4940, situate in the Township of Marburg and in the Lower South Coast Regional Water Services Area, County of Alfred, Province of Natal, in extent 6,3873 hectares;

Lot 27, No. 5509, situate in the Township of Marburg and in the Lower South Coast Regional Water Services Area, County of Alfred, Province of Natal, in extent 17,9124 hectares;

Subdivision 1 of Lot 29, No. 4941, situate in the Township of Marburg and in the Lower South Coast Regional Water Services Area, County of Alfred, Province of Natal, in extent 11,4216 hectares.

The above-mentioned properties are situated on the Oscar Borcherds (Main Sugar Mill Road), Marburg.

The following information is furnished regarding the properties, though in this respect, nothing is guaranteed:

The properties to be sold are vacant stands with no improvements. The properties are also unoccupied.

Terms.—10 per cent of the purchase price and 2½ per cent auctioneer's commission of the purchase price (with a minimum of R20) in cash on the day of the sale, the balance against transfer to be secured by a bank or building society guarantee to be furnished to the Deputy Sheriff, Port Shepstone, within 21 days from the date of the sale.

The full conditions of sale may be inspected at the offices of the Deputy Sheriff, Port Shepstone.

Durban, 19/8/80.

DURBAN.—Case 31671/77. Magistrate's Court, Durban: Under Finance (Pty) Ltd, Plaintiff, and Sivanandhan Chetty, Defendant.

In pursuance of a judgment of the Magistrate for the District of Durban and writ of execution dated 5/8/77, the following immovable property will be sold in execution by the Messenger of the Court, Chatsworth, at the front entrance to the Magistrate's Court Buildings, Chatsworth, at 10h00 on Tuesday, 30/9/80, namely:

Lot 1015, Silverglen Township, situate in the City and County of Durban, Province of Natal, in extent 1 034 square metres.

Improvements.—Brick under tile roof dwelling, comprising of three bedrooms, kitchen, toilet, bathroom, lounge and dining-room.

Outbuilding: Double garage, toilet, two rooms, kitchen.

Street address.—56 Floradale Road, Silverglen.

Material conditions.—1. This sale shall be subject to the provisions of the Magistrates' Courts Act (Act 32 of 1944, as amended), and the rules made thereunder.

2. The purchase price shall be paid by means of a deposit of 10 per cent thereof in cash immediately on the property being knocked down to the purchaser and the balance shall be paid or secured within 14 days after the date of sale.

3. The purchaser shall pay all auctioneer's charges on the day of sale direct to the Messenger of Court.

4. The property is sold as it stands and subject to any servitudes or conditions of title that may be registered against the property.

5. The full conditions of sale may be inspected at the offices of the Plaintiff's/Judgment Creditor's attorneys hereunder or at the offices of the Messenger of Court, Chatsworth, 12 Oak Avenue, Kharwastan.

Durban, 19/8/80.

Helman & Partners, Plaintiff's Attorneys, 16th Floor, Nedbank Centre, Durban Club Place, Durban.

DURBAN.—Case 22015/80. Magistrate's Court, Durban: Allied Building Society, Plaintiff, and Rajkumar Mungal, Defendant.

In pursuance of a judgment granted on 15/7/80 in the Court of the Magistrate, Durban, and under a writ of execution issued thereafter, the immovable property listed hereunder shall be sold in execution to the highest bidder on 18/9/80 at 10h00 in front of the Magistrate's Court, Sometseu Road entrance, Durban:

Subdivision 11 of 01 of the farm Klein Zeekoe Vallei 803, situate in the City and County of Durban, Province of Natal, in extent 1 230 square metres.

Postal address.—125 Morewood Road, Clare Estate, Durban.

The property consists of a brick under tile main building comprising of lounge, kitchen, two bedrooms, bathroom, toilet with municipal water and electricity and an extension to the main building (still to be completed), comprising of a double-storey brick under tile.

Upstairs: Kitchen, two lounges, two bedrooms, bedroom/bathroom, toilet (combined), bathroom, toilet, two balconies, dome in the centre.

Downstairs: Two bedrooms, two lounges, two bathrooms, two toilets, two kitchens and entrance with stairs leading upstairs.

1. The sale shall be subject to the terms and conditions of the Magistrates' Courts Act and the rules made thereunder.

2. (a) The purchaser shall pay a deposit of 10 per cent of the purchase price and the auctioneer's commission in cash immediately after the sale and the balance against transfer to be secured by a bank or building society guarantee to be furnished to the Messenger of the Court within 14 days after the sale to be approved by the Plaintiff's attorneys.

(b) The purchaser shall be liable for payment of interest at the rate of 11 per cent per annum to the Plaintiff on the respective amount of the awared in the plan of distribution from the date of sale to date of transfer.

3. Inasmuch as the Defendant is a member of the Indian group, no bids will be accepted by or on behalf of a person who is not a member of such group, unless such person exhibits to the auctioneer at the sale a permit from the Minister concerned authorising him to acquire such property which is in a proclaimed Indian Area.

4. Transfer shall be effected by the attorneys for the Plaintiff and the purchaser shall pay all transfer dues, including transfer costs, transfer duty, current rates and other necessary charges to effect transfer upon request by the said attorneys.

The full conditions of sale may be inspected at the offices of the Messenger of the Court, Durban North, First Floor, 17 Mona Road, Durban.

Durban, 1/8/80.

Romer Robinson & Catterall, Plaintiff's Attorneys, Seventh Floor, Allied Buildings, Gardiner Street, Durban.

NEWCASTLE.—Cases 2246/80, 2677/80, 1945/80, 2245/80, 1950/80 and 2678/80. Magistrate's Court, Newcastle: A.P.A. Distributors (Pty) Ltd, A.P.A. Distributors (Pty) Ltd, A.P.A. Distributors (Pty) Ltd, Kew Engineering (Pty) Ltd, Kew Engineering (Pty) Ltd and Kew Engineering (Pty) Ltd, Plaintiffs, versus Pleton (Pty) Ltd, First Defendant, and J. H. van Staden, Second Defendant.

In pursuance of a judgment issued on 30/5/80, 24/6/80, 4/8/80, 30/n5/80, 24/6/80 and 4/8/80 and warrant of executions, dated 4/8/80, 24/6/80, 30/5/80, 24/6/80, 4/8/80 and 30/5/80, the undermentioned properties will be sold in execution on 15/9/80 at 10h00 at the Magistrate's Court, Newcastle:

(1) Subdivision 18 (of 3) of the farm Samaons Klip 3312, situate in the District of Klip River, Province of Natal, in extent 24,4926 hectares.

(2) Lot 2903, Newcastle Township (Extension 7), siutate in the Borough of Newcastle, County of Klip River, Province of Natal, in extent 1 196 square metres.

(3) Onderverdeling 5 (van 1) van die plaas Harte Rivier 3324, distrik Kliprivier, provinsie Natal, groot 84,11110 hektaar.

(4) Lot 3995, Newcastle (Extension 22), situate in the Borough of Newcastle, County of Klip River, Province of Natal, in extent 2 680 square metres.

These properties are improved.

The conditions of sale may be inspected at the offices of the Messenger of Court, Newcastle, as from date of publication hereof.

Newcastle, 25/8/80.

E. C. Butler, for De Jager, Butler & Steyn, Allied Buildings, 50 Scott Street, Newcastle.

ORANJE-VRYSTAAT • ORANGE FREE STATE

WESSELSBRON.—Case 197/80. Magistrate's Court, Wesselsbron: Standard Building Society, Plaintiff, and I. J. van Antwerpen, Defendant.

In the execution of a judgment of the Magistrate's Court for the District of Wesselsbron, held at Wesselsbron in the above suit, a sale without reserve will be held at the premises, namely 66 President Steyn Street, Wesselsbron, on Friday, 19/9/80 at 11h00, on conditions to be read by the auctioneer at the time of the sale, of the following property of the Defendant, to wit:

Certain Erf 630, situated in Extension 4 in the Town and District of Wesselsbron, better known as 66 President Steyn Street, Wesselsbron, measuring 1 409 square metres.

The following information is furnished, but in this respect nothing is guaranteed:

Three bedrooms, bathroom, toilet, kitchen, scullery, lounge, dining-room and entrance hall, garage, store-room and outside toilet.

Terms.—The purchaser shall pay 10 per cent of the purchase price in cash immediately after the sale into the hands of the Messenger, the balance to be secured by a bank or building society guarantee within 14 days after the sale;

Conditions.—The conditions of sale may be inspected at the Messenger's office during office hours.

P. D. Yazbek, of Lovius Block Meltz Steyn & Yazbek, Second Floor, Colonial Mutual Buildings, 53 Maitland Street, Bloemfontein.

JACOBSDAL.—Hooggeregshof, Oranje-Vrystaatse Provinsiale Afdeling: Andries Jacobus Wagner, Eiser, en Martha Louisa Viljoen, Verweerderes.

Ten uitvoering van 'n vonnis van die Hooggeregshof van Suid-Afrika (Oranje-Vrystaatse Provinsiale Afdeling), sal 'n verkoping sonder voorbehoud van die volgende eiendom van bogenoemde Verweerderes plaasvind voor die Landdroskantoor, Jacobsdal, om 10h00 op Vrydag, 12/9/80, naamlik:

Sekere droë Erf 118, geleë in die distrik Jacobsdal, te hoek van Hoop- en Piet Retiefstraat, groot 1 606 vierkante meter.

Die volgende inligting word verstrek maar in hierdie opsig word niks gewaarborg nie: Verbeterings bestaan uit:

Drie-slaapkamerwoning, enkel garage, buitegeboue.

Terme.—Die koper sal 10 persent van die koopsom in kontant aan die Adjunk-balju betaal onmiddellik na die verkoping. Die balans moet verseker word deur 'n bank- of bougenootskapwaarborg wat binne 14 dae na die datum van verkoping aan die Adjunk-balju gelewer moet word. Indien die eiendom deur die eerste verbandhouer gekoop word, hoef die 10 persent kontantbetaling nie gemaak te word nie.

Voorwaardes.—Die verkoopvoorwaardes is ter insae in my kantoor te Safari Kafee, Andries Pretoriusstraat, Jacobsdal, gedurende kantoorure.—Ad hoc Adjunk-balju vir die distrik Jacobsdal, Safari Kafee, Andries Pretoriusstraat, Jacobsdal.

D. J. Nortier, p/a Naude & Van de Wall, Eiser se Prokureurs, Trustfonteingebou, Posbus 153, Bloemfontein.

BLOEMFONTEIN.—Saak 8217/80. Landdroshof, Bloemfontein: Die Stadsraad van die Munisipaliteit van Bloemfontein, Eiser, en J. A. C. Fourie, Verweerder.

Ingevolge 'n uitspraak in die Hof van die Landdros van Bloemfontein, en 'n lasbrief vir geregtelike verkoping gedateer 29/7/80, sal die volgende eiendom op Vrydag, 26/9/80 om 10h00, by die Peetlaaningang van die Landdroshof, Bloemfontein, aan die hoogste bieder geregtelik verkoop word:

Sekere Erf 21391, geleë in die stad en distrik Bloemfontein, groot 1 276 vierkante meter, gehou kragtens Transportakte 6414/79, geregistreer op 1/8/79 (Perseeladres, Ryno Kriellaan 84, Universitas, Bloemfontein).

Die volgende verbeterings is aangebring maar niks word gewaarborg nie:

Woonhuis bestaande uit drie slaapkamers, sitkamer eetkamer, kombuis twee badkamers, toilet.

Buitegeboue.—Enkelmotorhuis en bediendetoilet.

Die verkoopvoorwaardes lê ter insae by die kantoor van die Geregsbode, Saambougebou, Aliwalstraat 219–220, Bloemfontein.

Bloemfontein, 19/8/80.

D. W. Morrison, p/a Naude & Naude, Van de Wall & Vennote, Prokureur vir Eiser, Derde Verdieping, Trustfonteingebou, Posbus 260, St. Andrewstraat 151, Bloemfontein.

THEUNISSEN.—Saak 60/1980. Hooggeregshof Oranje-Vrystaatse Provinsiale Afdeling: Andries du Plooy, Eiser, en Willem Lodewyk Pretorius, Verweerder.

Ter uitvoering van 'n uitspraak van die Hooggeregshof van Suid-Afrika (Oranje-Vrystaatse Provinsiale Afdeling), sal die ondervermelde onroerende eiendom geregtelik verkoop word op Vrydag, 19/9/80 om 10h00, deur die Adjunk-balju, voor sy kantoor te Vanheerdenstraat 45, Theunissen.

Sekere plaas School Site 386, 'n gedeelte van die plaas Bella Vista 522, geleë in die administratiewe distrik Theunissen, groot 2,5182 hektaar.

Die volledige verkoopvoorwaardes lê ter insae in die kantoor van die Adjunk-balju, Theunissen.

Theunissen, 11/8/80.

F. B. Coetzer, Adjunk-balju, Theunissendistrik, Vanheerdenstraat 45, Posbus 170, Theunissen.

THEUNISSEN.—Case 60/1980. Supreme Court, Orange Free State Provincial Division: Andries du Plooy, Plaintiff, and Willem Lodewyk Pretorius, Defendant.

In execution of a judgment of the Supreme Court of South Africa (Orange Free State Provincial Division), the undermentioned immovable property will be sold in execution of Friday, 10h00, 19/9/80, by the Deputy Sheriff, in front of the office, 45 Van Heerden Street, Theunissen.

Certain farm School Site 386, a portion of the farm Bella Vista 522, situated in the Administrative District of Theunissen, measuring 2,5182 hectares.

The full conditions of sale may be inspected at the office of the Deputy-Sheriff, Theunissen.

Theunissen, 11/8/80.

F. B. Coetzer, Deputy Sheriff, 45 Van Heerden Street, P.O. Box 170, Theunissen.

OPENBARE VEILINGS, VERKOPE EN TENDERS • PUBLIC AUCTIONS, SALES AND TENDERS

TRANSVAAL

A. O. MULDER AGENTSKAPPE • Behoorlik daartoe gelas deur die kurator in die insolvente boedel van C. G. Knoetze (No. T750/80), sal ons per publieke veiling verkoop die ondergemelde goedere as volg:

Datum.—Saterdag, 20/9/80.

Tyd.—10h00.

Plek.—Plaas Sterkstroom, Pk. Nylstroom. (Ry vanaf Nylstroom met die Kranskoppad en draai regs met Maroelasfonteinpad dan vir ongeveer 3 km op regterhand.)

Goedere.—Kragopwekker op driepunt gemonteer, pulley op ysterstaander gemonteer, staalkosbak, ou stukkende kruiwa, sewe staalvensters, vier staaldeurkosyne, staalstaander, Deutz Model D5505-trekker (kleur groen, geen registrasienommer), Enjinnommer PAL 812 Tipe 61FM 4609388, oliedrom met ghriespomp, houtleer, groenteplanter, 3-lid-zig-sag-eg, twee lengtes dik staalpype, ou ses-ryplanter, staaldriepoot, Vetsak-vyf-rygrondbreker, drie-voorskaarploeg (kleur groen), twee-ry Vetsakplanter, vierskaarploeg, massakoringbak, 11-rydubbeldisc en 'n staaltrollie.

Voorwaardes.—1. Slegs kontant of bankgewaarborgde tjek sal as betaling aanvaar word en betaling vir goedere gekoop moet geskied onmiddellik na afloop van veiling.

2. Verkoopbelasting bereken teen 4 persent op die koopprys sal bygetel word.

Navrae by A. O. Mulder, Rentmeestergebou, Potgieterstraat 88, Nylstroom.

UNITED AUCTIONEERING CO.'S SALES • Forty Stands Fourways (Pty) Ltd (in liqu.) (No. T216/78).—Duly instructed by the joint liquidators in the above matter, we will sell by public auction at our mart, 109 Pritchard Street (off Troye Street), Johannesburg, on Monday, 15/9/80 at 11h00, the following:

Seven vacant stands situate in Fourways, Sandton

Stand No.	Address	Measurements
		m²
213.....	Albatros Drive and Robin Road.....	1 501
231.....	Robin Drive.....	1 513
232.....	Robin Drive.....	1 513
233.....	Robin Drive.....	1 513
236.....	Albatros Drive.....	1 500
237.....	Albatros Drive.....	1 500
268.....	Fisant Avenue.....	1 500

The above stands are all situate in a prestige and well-built up township.

For further particulars and viewing please apply to the auctioneers.

Bonds available to approved purchasers.

Sale takes place at our mart, 109 Pritchard Street (off Troye Street), Johannesburg, on Monday, 15/9/80 at 11h00.

United Auctioneering Company, Auctioneers and Stock Liquidators, 109 Pritchard Street, Johannesburg.

KAAP • CAPE

SYFRETS TRUST • Insolvente boedel van John Carey Slater (No. C443/79): Openbare veiling van plaasciendom, geleë te Sandkraal en verskeie plaasimplemente en gereedskap.

Die ondergenoemde afslaers, behoorlik daartoe gelas, sal die volgende plaasciendom per openbare veiling te koop aanbied op Woensdag, 3/9/80, stiptelik om 10h00, op die plek synde die plaas Sandkraal, distrik George:

Sekere stuk grond geleë in die Afdeling van George, synde die restant van Gedeelte 16 ('n gedeelte van Gedeelte 5) van die plaas Sandkraal 197, groot 65,1928 hektaar, tesame met die volgende items as 'n lopende besigheid:

26 aluminiumbesproeiingspype met sproeiers hoofbesproeiingspyplyn vanaf die rivier met kragtige turbine en 'n Lister-kragopwekker.

Verbeterings.—Gerieflike drieslaapkamersteenhuis, 40 hektaar vrugbare ploeggrond, 16 kampe, almal omhein met geskikte en betroubare watervoorsiening, heinings almal in 'n redelike toestand, sementdam en mediumgrootte gronddam, drie plaaswerkerhuisies, twee groot hoenderbatterye wat 4 000 hoenders huisves en twee groot skure.

Eiendom het goeie see- en berguitsig.

Die volgende roerende goedere sal ook te koop aangebied word.

Moba-eiergradeerder, Stihl-kettingsaag, Lister-kragopwekker, Massey Ferguson-skop, Massey Ferguson-drieskaarskottelploeg, twee 50 meter plastiese tonnels, elektriese boor en slypsteen, sinkplate, Stihl-insektesproeier, twee koeie, verskalf, eiermandjies, eierwasmasjien, meubels en allerlei plaasgereedskap.

Afslaersnotas.—1. Verkoopvoorwaardes: Eiendom word voetstoots verkoop, soos dit staan, en sonder enige waarborge. Die volledige verkoopvoorwaardes is beskikbaar by die afslaers.

2. Betaling: 10 persent van die koopsom en afslaerskommissie in kontant op datum van die veiling, die balans teen transport verseker te word deur 'n aanvaarbare waarborg wat gelewer moet word binne 14 dae nadat die verkoping deur die kurator goedgekeur is.

3. Besigtiging kan met die afslaers gereël word.

Vir nadere besonderhede van veiling, raadpleeg die afslaers. —F. W. Gericke, Sentragebou, George; en/of Muller, Harris & Van Vuuren, Barclays Bankgebou, George.

A. M. Rennie, Kurator, Syfrets Trust, Posbus 260, Kaapstad.

NATAL

DALES BROS AUCTIONS • Duly instructed by the liquidator of Lawrades Investments (Pty) Ltd (No. N229/79), we will sell by public auction on site 22, 24 Highdale Road, Glen Anil Township, North Coast, Natal, on Thursday, 18/9/80 at 11h00:

Seven vacant prestige sites, situated at 22 and 24 Highdale Road, 11, 13, 16 and 18 Mopani Road and 9 Umsenga Close, Glen Anil Township.

The sales are subject to confirmation by the liquidator by or before 25/9/80, and for full conditions of sale, kindly contact the auctioneers.—Dales Bros, Estate Agents (Pty) Ltd, Pinetown.

STOCK OWNERS AGENCIES (PTY) LTD • Corridor Agencies (Pty) Ltd (in liqu.) (No. N178/80).—We will sell by public auction, on Thursday 11/9/80, at 10h30, behind Spiro's Café, Theatre Lane, Harding, the following:

18 x 70 kg maize, 40 x 500 gr salt, 100 x 50 kg salt, mesh wire, Lactogen, soap powders, tea, soaps, pots, tinned meats and fruit, golden syrup, tobacco, soups, potato pockets, office furniture, stove, deepfreeze etc.

Further particulars from the auctioneers.—Stock Owners Agencies (Pty) Ltd, Kokstad.

ORANJE-VRYSTAAT • ORANGE FREE STATE

ELLENBERGER & KAHTS • Insolvente veiling van erf. —Opgedra deur die kurator in die insolvente boedel van Denis Schumann (No. B23/80), sal die ondergemelde eiendom per openbare veiling verkoop word te Melpomenestraat 7, Bayswater, Bloemfontein, op Saterdag, 6/9/80 om 10h00:

Die eiendom is sekere Erf 16949, groot 1 767 vierkante meter en bekend as Melpomenestraat 7, Bayswater, Bloemfontein, welke eiendom geheel en al onverbeter is.

Verkry nadere besonderhede intussen van die kurator.—L. D. Y. Booysen, Van Claude Reid, Haylett, Davidson & Marais; en/of Ellenberger & Kahts, Afslaers, Bloemfontein.

Koop Nasionale Spaarsertifikate

Buy National Savings Certificates

NAAMSVERANDERING • CHANGE OF NAME

WET OP VREEMDELINGE, 1937

Die onderstaande kennisgewings van voorneme om by die Staatspresident aansoek te doen om 'n ander van aan te neem, word ingevolge artikel 9 van Wet 1 van 1937 vir algemene inligting gepubliseer. Enigeen wat daarteen beswaar het dat die genoemde van aangeneem word, moet sy/haar beswaar met vermelding van redes daarvan so gou moontlik skriftelik by die Landdros genoem in die betrokke kennisgewing, indien.

Die inligting word, waar van toepassing, verstrek in die volgorde: (1) Applikant(e) se volle name en van, en of minderjarige(s); (2) woonadres; (3) besigheid of beroep; (4) indien 'n aansoek ten opsigte van kinders onder 10 jaar, die naam (name); (5) die van wat aangeneem word; (6) die redes daarvoor; (7) die naam (name) voorheen gedra indien anders as onder (1) of (4), respektiewelik; (8) die name van vrou en kinders indien by die aansoek ingesluit; (9) bygestaan, indien so, deur; besware in te dien by die Landdros te.

THE ALIENS ACT, 1937

The undermentioned notices of intention to apply to the State President to assume a different surname are published in terms of section 9 of Act Act 1 of 1937. Any person who objects to the assumption of the said surname should lodge his/her objection, in writing, stating full reasons therefor, to the Magistrate mentioned in the relevant notice.

The information, where applicable, is given in the following order: (1) Full names and surname of applicant(s), and whether minor(s); (2) residential address; (3) business carried on, or occupation; (4) if an application in respect of children under 10 years, the name(s); (5) the surname to be assumed; (6) the reasons therefor; (7) the name(s) previously borne, if other than under (1) or (4), respectively; (8) the names of wife and children, if included in the application; (9) assisted, if so, by; objections to be lodged with the Magistrate of.

TRANSVAAL

BROWN, Allen Rodney Woodcroft. (2) 1 Jes Court Tornado Crescent, Georginia. Roodepoort. (3)—. (4)—. (5) Woodcroft-Brown. (6) Over the years my friends and associates have combined my last Christian name with my surname, Brown, with the result that as I reached maturity much confusion arose, as many people believe that my surname is Woodcroft-Brown. It is to avoid such confusion that my application is made. (7)—. (8) Rosalyn Heather. (9) Roodepoort.

15-22-29-5

BRUMMER, Kathleen Margaret, gebore Gates. (2) Badenhorstlaan 13, Elsburg, Tvl. (3)—. (4)—. (5) Da Silva. (6) Sedert September 1968 woon ek en Jose Pedro da Silva saam as man en vrou en ek het ook 'n kind van hom en verlang dat ek self en my dogter Kathleen Brummer voortaan as Da Silva sal bekend staan. (7)—. (8) Vrou, Kathleen Brummer. (9) Germiston.

15-22-29-5

ESTERHUIZEN, Jennifer Elizabeth. (2) 14 South Gate, Ring Road, Crown Gardens, Johannesburg. (3) Secretary, Steeledale Systems (Pty) Ltd, 8a Steele Street, Steeledale, Johannesburg. (4) Louis Darren Steyn, minor son. (5) Esterhuizen. (6) Father has left common home, has no intention to return, no interest in the child, and does not pay support. (7)—. (8)—. (9) Johannesburg.

22-29-5-12

GENTHE, Ursula. (2) 6 Berrals Flats, 369 Du Toit Street, Pretoria. (3) Conveyancing Clerk at Savage, Jooste & Adams, 210 Permanent Buildings, Paul Kruger Street, Pretoria. (4) Oliver Ackermann. (5) Genthe. (6) The child was inadvertantly registered under the surname Ackermann at birth, and as he lives with me and is my son I would like him to assume my surname. (7)—. (8)—. (9) Pretoria.

29-5-12-19

MARTIN, Raymond Jomes Matthew Ernest. (2) Dunbarstraat 55a, Bellevue, Johannesburg, 2198. (3) 'n Elektrisiën in diens van die Departement Pos en Telekommunikasie in Yeoville, Johannesburg. (4)—. (5) Martini. (6) Ek is vanaf geboorte bekend as Martini, en is as sulks geregistreer by verskeie regerings en Quasi-Regerings Departemente. (7)—. (8) Vrou, Debra Susan Martin, gebore Dean, en minderjarige kind Jayson Raymond. (9) Johannesburg.

15-22-29-5

SMITH, Patricia, born Newbould. (2) 103 Cherere Flats, 62 Devenish Street, Sunnyside, Pretoria. (3) Draughtswoman. (4)—. (5) McCarthy. (6) I am divorced and do not wish to bear my married name, my relationship with my late father was not happy and I prefer to adopt the maiden name of my mother. (7) Newbould. (8)—. (9) Pretoria.

29-5-12-19

STONELEY, Sheena. (2) 8 Dukes Avenue, Windsor Park, 2195. (3) Housewife. (4) Jacqueline Craxton, minor daughter. (5) Stoneley. (6) I, Sheena, have re-married and I wish my daughter to bear the same surname as myself and that of her baby step-sister. (7)—. (8)—. (9)—.

8-15-22-29

WINGATE-PEARSE, Karen Fern. (2) 8 Acacia Park, 26 Acacia Road, Northcliff Extension 2. (3) Credit controller. (4) Allan Leo, minor son. (5) Carley-West. (6) Due to my emment marriage to his future father in order that he will not feel left out or different. (7) Reynolds, (8)—. (9) Johannesburg.

22-29-5-12

ZULUCOPULOS, Edward. (2) 13 Eleanor Street, Troyville, Johannesburg, 2094. (3) A printer at Picardy Stationers (Pty) Ltd, Third Floor, Pilot House, corner of Marshall and Hubert Streets, Westgate, Johannesburg. (4)—. (5) Koplis. (6) My name is lengthy and difficult to pronounce and is invariable shortened to Zulu which is a cause for embarrassment particularly to my wife and minor daughter or to Copulos which is often mispelt and is a cause of considerable confusion. (7)— (8) Wife, Marisa Zulucopulos, born Basson, and minor child Natasha Zulucopulos. (9) Johannesburg.

22-29-5-12

KAAP • CAPE

WEIGHT, Jacqueline, minor child. (2) 36 Bay Road, Mouille Point, Cape Town. (3)—. (4)—. (5) Freeling. (6) My parents were divorced when I was very young and my mother remarried Graham Freeling in 1972. Since that time I have always been known by the surname Freeling and accordingly wish to adopt this surname. (7)—. (8)—. (9) N. Weight, father; Cape Town.

15-22-29-5

NATAL

BOTES, Paul Edward, 'n minderjarige. (2) Pattersonstraat 90, Newcastle. (3)—. (4)—. (5) Breytenbach. (6) Ek is algemeen bekend onder die van Breytenbach. My moeder was met 'n ene Breytenbach getroud, wie in 1977 oorlede is, en albei my susters se vanne is Breytenbach. (7)—. (8)—. (9) Moeder, Magdalena Maryna Jacoba Scheepers, voorheen Breytenbach, voorheen Botes, gebore Myburgh; Newcastle.

29-5-12-19

HADEBE, Patrick Mvimbi. (2) Gobandlovu, Area of Induna, Joseph Dube, in the ward of Chief Ndesheni Dube, in the District of Mtunzini. (3) Employed as welder at Huletts Sugar Mill in Felixton. (4)—. (5) Nyamazane. (6) This is my proper surname as my father's surname was Nyamazane and not Hadebe. The latter surname belongs to my mother and I have been known by the surname of Nyamazane for some time. (7)—. (8)—. (9) Mtunzini.

22-29-5-12

SLAGTERSKENNISGEWINGS • BUTCHERS' NOTICES

RAAD VAN BEHEER OOR DIE VEE- EN VLEISNYWERHEDE

Enige persoon wat beswaar het teen die oprigting, oordrag of verskuiwing van die vermelde besigheid of die kansellasie van 'n registrasie kan sy beswaar indien in die vorm van 'n eedsverklaring, in drievoud, by die Raad se kantoor soos in die kennisgewing aangedui en binne die tydperk soos vermeld.

Die inligting word, waar van toepassing, verstrek in die volgorde: (1) Dorpsgebied of distrik, afdeling, county; (2) applikant; (3) aard van aansoek (nuwe registrasie, oordrag, verskuiwing) en aard van besigheid; (4) besonderhede van perseel of plek (beskrywing, nommer, ligging en/of adres); (5) kansellasie van 'n registrasie (die perseel, indien anders as voorgaande, of wat laat vaar word vir verskuiwing) en/of nagesoek deur wie (volle naam); (6) besware aan en tydperk waarbinne.

LIVESTOCK AND MEAT INDUSTRIES CONTROL BOARD

Any person who has any objection against the establishment, transfer or removal of the business mentioned or the cancellation of a registration, may lodge such objection in the form of an affidavit, in triplicate, with the Board's office as indicated and within the period stated.

The information, where applicable, is given in the following order : (1) Township or district, division, country; (2) applicant; (3) kind of application (new registration, transfer, removal) and kind of business; (4) details of premises or place (description, number, situation and/or address); (5) cancellation of a registration (the premises, if other than the preceding, or quitted for removal) and/or by whom (full name); (6) objections to, and period within which.

TRANSVAAL

GERMISTON.—(2) Clive John Derby-Lewis. (3) Transfer of ownership, retail butcher. (4) Shop 9, Stands 11 and 13, Dowerglen Shopping Centre, 99 Linksfield Road, Dowerglen, Edenvale. (5) Clive Edwin Tredoux. (6) Branch Manager, P.O. Box 4357, Johannesburg, 14 days.

GROBLERSDAL.—(2) Andries Diederik Olivier. (3) Verskuiwing van perseel, kleinhandelslagter. (4) Voortrekkerweg 22a, Groblersdal. (5) Slaghuisperseel, Kameelkop, distrik Groblersdal. (6) Hoofbestuurder, Posbus 1357, Pretoria, 14 dae.

HEBRON.—(2) Keneth Lekau Mokoene. (3) New application, retail butcher. (4) Oskraal, distrik Odi. (5)—. (6) General Manager, P.O. Box 1357, Pretoria, 30 days.

JOHANNESBURG.—(2) Joseph Simon Magua, trustee van die ter stigte maatskappy, The Meat Place (Pty) Ltd. (3) Oordrag van eiendomsreg, kleinhandelslagter. (4) Erf 867, Broadwaystraat 91, Bezuidenhout Vallei, Johannesburg. (5) John Martin Gruff. (6) Takbestuurder, Posbus 4357, Johannesburg, 14 dae.

JOHANNESBURG.—(2) David Henry William Potter. (3) New application, transfer of ownership, retail butcher. (4) Joma Goodwill Meat Market, 236 Johannesburg Road, La Rochelle. (5)—. (6) Branch Manager, P.O. Box 4357, Johannesburg, 14 days.

LEANDRA.—(2) Lourens Jacobus Abraham Basson. (3) Verskuiwing van perseel, kleinhandelslagter. (4) Erf 239, Nordastraat 17, Leandra. (5) Gedeelte 5 van Erf 239, Nordastraat, Leslie. (6) Hoofbestuurder, Posbus 1357, Pretoria, 14 dae.

RUSTENBURG.—(2) Johannes Machiel Steynfaardt. (3) Nuwe aansoek, groothandelslagter. (4) Driewiel Vleismark, Klapperstraat 280, Protea Park, Rustenburg, Tvl. (5)—. (6) Hoofbestuurder, Posbus 1357, Pretoria, 30 dae.

SPRINGS.—(2) Costas Theordorou Hadjiconstantas. (3) Transfer of premises, retail butcher. (4) Stand 745 and 765, Casseldale, Springs, 131 Clydesdale Road, Casseldale, Springs. (5) Stand 765, 133 Clydesdale Road, Casseldale, Springs. (6) Branch Manager, P.O. Box 4357, Johannesburg, 14 days.

WARMBAD.—(2) Johannes Lodewyk Steenekamp. (3) Oordrag van eiendomsreg, kleinhandelslagter. (4) Plaas Rietfontein 536, KQ, distrik Warmbad, Tvl. (5) Josephus Fourie. (6) Hoofbestuurder, Posbus 1357, Pretoria, 14 dae.

WESTDENE.—(2) Potgieter & Roodt (Edms.) Bpk., handeldrywend as Onse Slaghuis. (Direkteure: Sarel Gerhardu Smit en Hendrina Carlena Smit.) (3) Nuwe aansoek, groothandelslagter. (4) Thorntonweg 20, Westdene, Johannesburg. (5)—. (6) Takbestuurder, Posbus 4357, Johannesburg, 30 dae.

KAAP • CAPE

BRITSTOWN.—(2) Britstown Ko-operatiewe Vleis Maatskappy Bpk. (3) Verskuiwing van perseel, kleinhandelslagter. (4) Markstraat 19, Britstown, Perseel 89 en 494. (5) Breëstraat 5a, Britstown, Perseel 65. (6) Hoofbestuurder, Posbus 1357, Pretoria, 14 dae.

KEI MOUTH.—(2) Johannes Magiel Botes, trading as Kei Self Service. (3) Nuwe aansoek, kleinhandelslagter (voorafverpakte vleis). (4) Main Road 60, Kei Mouth, Standplaas 638, munisipaliteit Kei Mouth, K.P. (5)—. (6) Hoofbestuurder, Posbus 1357, Pretoria, 30 dae.

OBSERVATORY.—(2) Thirty Five Cents Butcheries (Pty) Ltd. (3) Transfer of ownership, retail butcher. (4) 331 Lower Main Road, Observatory. (5) Observatory Meat Market (Pty) Ltd. (6) Branch Manager, P.O. Box 96, Maitland, 14 days.

PANORAMA.—(2) John Alexander Brodie. (3) Oordrag van eiendomsreg, kleinhandelslagter. (4) Panorama Butchery, Persele 2179 tot 2183, Haydnstraat, Kaapzight, Parow. (5) Joseph Johannes Dauth. (6) Takbestuurder, Posbus 96, Maitland, 14 dae.

WYNBERG.—(2) B. Z. Arendse & Kie. (Edms.) Bpk. (3) Oordrag van eiendomsreg, kleinhandelslagter. (4) Slaghuisperseel te Winkel 4, Fairways Besigheidsentrum, hoek van Unionweg en Vierde Laan, Fairways, Wynberg. (5) George Turner. (6) Takbestuurder, Posbus 96, Maitland, 7405, 14 dae.

WYNBERG.—(2) Samuel Johnston en Mev. Una Johnston. (3) Oordrag van eiendomsreg, kleinhandelslagter. (4) Slaghuis, Hoofweg 15, Diepriver, Kaapstad. (5) Gerhard Muller. (6) Takbestuurder, Posbus 96, Maitland, 7405, 14 dae.

NATAL

DURBAN.—(2) Gonaseelan Naicker. (3) Transfer of ownership, retail butcher. (4) 455c Penguin Street, Kharwastan, Durban (double-storey building). (5) Pulsen Singh. (6) Branch Manager, P.O. Box 2246, Durban, 14 days.

PIETERMARITZBURG.—(2) Mahomed Suleman Jasat. (3) New application, retail butcher. (4) Remainder A of Lot 37, Township of Pietermaritzburg; 376 Berg Street, Pietermaritzburg. (5)—. (6) Branch Manager, P.O. Box 512, Pietermaritzburg, 30 days.

RAMSGATE.—(2) William Laurence Rush and Edmund Norman Atkinson. (3) Transfer of ownership, retail butcher. (4) Shop 3, Lot 624, National Marine Drive, Ramsgate. (5) Duro Gayo Primic. (6) General Manager, P.O. Box 1357, Pretoria, 14 days.

UTRECHT.—(2) Christiaan Bouwer Claassen. (3) Nuwe aansoek, kleinhandelslagter. (4) Restant van Onderverdeling 12 van die plaas Roodekoppe 119, distrik Utrecht, Natal. Posadres: Posbus 1, Kingsley, 3002. (5)—. (6) Hoofbestuurder, Posbus 1357, Pretoria, 30 dae.

ORANJE-VRYSTAAT • ORANGE FREE STATE

BOTHAVILLE.—(2) Wildrik (Edms.) Bpk. (Direkteure: Cornelis Johannes Labuschagne en Tjaard Petrus Olivier). (3) Oordrag van eiendomsreg, kleinhandelslagter, vervaardiger van fabrieksvleisprodukte. (4) Erf 217, Fonteinstraat 29, Bothaville, O.V.S. (5)—. (6) Hoofbestuurder, Posbus 1357, Pretoria, 14 dae.

HEILBRON.—(2) Jan Christoffel Marais. (3) Nuwe aansoek, kleinhandelslagter. (4) Algemene besigheidsgebied op hoofdeurgaan van dorp vanaf Witwatersrand na Kwa-Kwa en Lesotho. (5)—. (6) Hoofbestuurder, Posbus 1357, Pretoria, 30 dae.

WELKOM.—(2) Joylands Butcheries (Pty) Ltd. (3) Oordrag van eiendomsreg, kleinhandelslagter. (4) Erf 32, Lindsayweg 26b, Rheederspark, Welkom. (5) Lindsay Road Butchery (Pty) Ltd. (6) Hoofbestuurder, Posbus 1357, Pretoria, 14 dae.

WELKOM.—(2) Joylands Butcheries (Pty) Ltd. (3) Oordrag van eiendomsreg, kleinhandelslagter. (4) Erf 4802, Potgieterstraat 8a, Dagbreek, Welkom. (5) Elkemans Butchery (Pty) Ltd. (6) Hoofbestuurder, Posbus 1357, Pretoria, 14 dae.

SLUMOPRUIMINGSHOF-KENNISGEWINGS
SLUM CLEARANCE COURT NOTICES

DIE SLUMSWET, 1979 • THE SLUMS ACT, 1979

Kennisgewing geskied ingevolge artikels 8 (1), 8 (2) en 20 (5) (c) van die Wet respektiewelik, van verklarings van persele tot slums, van lasgewings met betrekking daarop of van opheffing van verklarings, soos uitgevaardig deur Slumopruimingshowe ooreenkomstig die bepalings van die Slumswet, 1979 (Wet 76 van 1979).

Die inligting word, waar van toepassing, verstrek in die volgorde: (1) Slumopruimingshof of plaaslike bestuursdistrik; (2) verklaring en/of lasgewings, of opheffing van verklaring; (3) datum van verklaring of opheffing; (4) beskrywing van perseel of persele; (5) ligging van perseel of persele.

Notice is given in terms of sections 8 (1), 8 (2) and 20 (5) (c) of the Act respectively, of declarations of premises to be slums, of directions related thereto or of rescissions of declarations as issued by Slum Clearance Courts in terms of the provisions of the Slums Act, 1979 (Act 76 of 1979).

The information, where applicable, is given in the following order: (1) Slum Clearance Court or local authority district; (2) declaration and/or directions, or rescission of declaration; (3) date of declaration or rescission; (4) description of premises; (5) location of premises.

ORANJE-VRYSTAAT • ORANGE FREE STATE

BLOEMFONTEIN.—(2) Verklaring tot 'n slum, lasgewings: Sloop onmiddellik. (3) Erwe 46, 47, Gedeeltes M48 en 64, Reddersburg. (4) 11/6/80. (5)—.

BLOEMFONTEIN.—(2) Declaration as a slum, directions: Demolish immediately. (3) Erven 46 and 47, Portions M48 and 64, Reddersburg. (4) 11/6/80. (5)—.

BLOEMFONTEIN.—(2) Verklaring tot 'n slum, lasgewings: (a) Sloop buitegeboue onmiddellik; (o) herstel hoofgebou voor of op 31/12/80. (3) Erwe 1/27 en RE/27, Reddersburg. (4) 11/6/80. (5)—.

BLOEMFONTEIN.—(2) Declaration as a slum, directions: (a) Demolish outbuildings immediately; (b) repair main buildings on or before 31/12/80. (3) Erven 1/27 and RE/27, Reddersburg. (4) 11/6/80. (5)—.

ALGEMEEN • GENERAL

TRANSVAAL

ELEKTRISITEITSVOORSIENINGSKOMMISSIE • Opgawe van tariewe vir 1980 [afgekondig ingevolge artikel 29 (3) van die Elektrisiteitswet, 1958]:

GRENSONDERNEMING

Die standaardtariewe is soos hieronder uiteengesit. Hierdie tariewe is met ingang van Julie 1980 onderworpe aan 'n toeslag van 7,5 persent.

Tarief (A): *Groot kraggebruikers*

Vir 'n toevoer aan 'n verbruiker wie se aangemelde maksimum aanvraag 25 kilovoltampère of meer van 'n driefasige wisselstroom is teen 'n frekwensie van 50 hertz en 'n ooreengekome spanning wat in die omgewing beskikbaar is, word die volgende gevorder:

(a) 'n Diensgeld van R20 per maand welke gelde betaal moet word of enige elektrisiteit gebruik word of nie;

(b) 'n aanvraaggeld vir elke kilovoltampère van die maksimum aanvraag wat in die maand voorsien is, teen die koers van—

(i) R8,80 wanneer die toevoer gelewer word teen 'n nominale spanning bo 380/220 volt; of

(ii) R9,05 wanneer die toevoer gelewer word teen die nominale spanning van 380 volt tussen fases en 220 volt tussen fase en neutraal;

(c) 'n energieprys teen die koers van 0,74c per kWh-elektrisiteit gedurende die maand voorsien: Met dien verstande dat die genoemde kWh-koers, gebaseer op die koste van steenkool wat by die kragstasies van die Sentrale Kragontwikkelingsonderneming verbruik is, met uitsondering van die kragstasies in (B), (C) en (D) van die Tweede Bylae by die Permit van die Sentrale Kragontwikkelingsonderneming genoem, synde R5 per metrieke ton, van tyd tot tyd op die volgende wyse aangepas word:

Die koste van steenkool, uitgedruk as 'n gemiddelde koste per metrieke ton van die steenkool by genoemde kragstasies verbruik, moet vasgestel word vir elke kwartaal tot aan die einde van Maart, Junie, September en Desember, en indien die verskil tussen die koste van steenkool vir die kwartaal wat pas verstreke is en die basiese koste van R5 minder as 3,5c is, is die kWh-tarief wat gedurende die volgende kwartaal gehef moet word die genoemde koers van 0,74c maar indien die genoemde koste van steenkool met 3,5c of meer van die basiese koste verskil, is die kWh-koers wat gedurende die volgende kwartaal gehef moet word die genoemde koers van 0,74c per kWh, vermeerder of verminder met 0,002c vir elke volledige vermeerdering of vermindering van 3,5c in die genoemde koste van steenkool bokant of onderkant die basiese koste;

(d) die netto bedrag wat ingvolge paragrawe (a), (b) en (c) hiervan bepaal is, is onderworpe aan die algemene korting of algemene toeslag wat op die tydstip heers.

Tarief (B): *Klein kraggebruikers*

Vir 'n elektrisiteitstoevoer waarvan die maandelikse maksimum aanvraag selde 75 kVA en nooit 100 kVA oorskry nie, beskikbaar gestel teen 'n nominale spanning van 380 volt tussen fases en 220 volt tussen fase en neutraal, met uitsondering van toevoere ingevolge Tarief (C) gelewer, is daar—

(a) 'n diensgeld vir elke toevoerpunt van R8 per maand wat betaal moet word of elektrisiteit geneem word of nie;

(b) ten opsigte van elke toevoerpunt, 'n kWh-geld vir 500 kWh van die maandelikse verbruik, of die maandelikse verbruik, watter getal ook al die laagste is, teen 'n tarief van 5,4c per kWh;

(c) 'n kWh-geld teen 'n tarief van 2,7c per kWh vir kWh geneem bo en behalwe die kWh wat in (b) hierbo genoem word:

Met dien verstande dat die kWh-koers van 5,4c en 2,7c per kWh, gebaseer op die koste van steenkool by die kragstasies van die Sentrale Kragontwikkelingsonderneming verbruik, met uitsondering van die kragstasies in (B), (C) en (D) van die Tweede Bylae by die Permit van die Sentrale Kragontwikkelingsonderneming genoem, synde R5 per metrieke ton, van tyd tot tyd op die volgende wyse aangepas moet word:

Die koste van steenkool, uitgedruk as 'n gemiddelde koste per metrieke ton van die steenkool wat by genoemde kragstasies verbruik is, moet vasgestel word vir elke kwartaal tot aan die einde van Maart, Junie, September en Desember, en indien die verskil tussen die koste van steenkool vir die pas verstreke kwartaal en die basiese koste van R5 minder is as 17,5c is die kWh-tarief wat in die volgende kwartaal toegepas moet word genoemde tariewe van 5,4c en 2,7c maar indien die genoemde koste van steenkool met 17,5c of meer van die basiese koste verskil, is die kWh-tarief wat in die volgende kwartaal toegepas moet word die genoemde tariewe van 5,4c en 2,7c per kWh, vermeerder of verminder met 0,01c vir elke volledige vermeerdering of vermindering van 17,5c in die genoemde koste van steenkool bokant of onderkant die basiese koste:

(d) die netto bedrag ooreenkomstig paragrawe (a), (b) en (c) hiervan bepaal, is onderworpe aan die algemene korting of algemene toeslag wat op die tydstip heers.

Tarief (C): *Stedelike huishoudelike verbruikers*

Vir 'n elektrisiteitstoevoer vir huishoudelike doeleindes vir 'n private woning of blok woonstelle, binne 'n wettig gestigde dorp of binne 'n gebied wat deur die Lisensiehouer as soortgelyk aan 'n wettig gestigde dorp geag word, is daar—

(a) 'n diensgeld van R4 per maand ten opsigte van elke toevoerpunt;

(b) 'n heffing vir 300 kWh van die maandelikse verbruik, of die maandelikse verbruik, watter getal ook al die laagste is, teen 'n tarief van 5,4c per kWh: Met dien

LUMINE TUO BIMUS LUMEN
University of Fort Hare
Together in Excellence

verstanne dat, vir 'n toevoer aan 'n blok woonstelle, hierdie heffing bereken word op die grondslag van 300 kWh of die gemiddelde maandelikse verbruik per wooneenheid;

(c) 'n kWh-geld teen 'n tarief van 2,7c per kWh vir kWh geneem bo en behalwe die kWh in (b) hierbo vermeld:

Met dien verstande dat die kWh-tariewe van 5,4c en 2,7c per kWh, gebaseer op die koste van steenkool by die kragstasies van die Sentrale Kragontwikkelingsonderneming verbruik, met uitsondering van die kragstasies in (B), (C) en (D) van die Tweede Bylae by die Permit van die Sentrale Kragontwikkelingsonderneming genoem, synde R5 per metrieke ton, van tyd tot tyd aangepas word op die wyse in paragraaf (c) van Tarief (B) uiteengesit;

(d) die netto bedrag ooreenkomstig paragrawe (a), (b) en (c) hiervan bepaal is onderworpe aan die algemene korting en algemene toeslag wat op die tydstip heers.

Straatverligting

Waar die Lisensiehouer elektrisiteit voorsien vir straatverligting of soortgelyke openbare verligting en dit in stand hou, word die bedrag vir sodanige elektrisiteit en diens by 'n spesiale ooreenkoms tussen die Lisensiehouer en die verbruiker vasgestel.

Bogenoemde bedrae word, ooreenkomstig die bepalinge van artikel 29 van die Wet, verander om te voldoen aan spesiale omstandighede wat van toepassing is op die voorsiening van elektrisiteit aan sekere verbruikers en in sekere gebiede.

OOS-KAAPLANDSE ONDERNEMING

Die standaardtariewe is soos hieronder uiteengesit. Hierdie tariewe is met ingang van Julie 1980 onderworpe aan 'n toeslag van 55 persent.

Tarief (A): *Groot kraggebruikers*

Vir 'n toevoer aan 'n verbruiker wie se aangemelde maksimum aanvraag 25 kilovoltampère of meer van 'n driefasige wisselstroom is teen 'n frekwensie van 50 hertz en 'n ooreengekome spanning wat in die omgewing beskikbaar is, word die volgende gevorder:

(a) 'n Diensgeld van R20 per maand welke gelde betaal moet word of enige elektrisiteit gebruik word of nie;

(b) 'n aanvraaggeld vir elke kilovoltampère van die maksimum aanvraag wat in die maand voorsien is, teen die koers van—

(i) R4,40 wanneer die toevoer gelewer word teen 'n nominale spanning bo 380/220 volt; of

(ii) R4,65 wanneer die toevoer gelewer word teen die nominale spanning van 380 volt tussen fases van 220 volt tussen fase en neutraal;

(c) 'n energieprys teen die koers van 0,67c per kWh gedurende die maand voorsien: Met dien verstande dat die genoemde kWh-koers, gebaseer op die koste van steenkool wat by die kragstasies van die Sentrale Kragontwikkelingsonderneming verbruik is, met uitsondering van die kragstasies in (B), (C) en (D) van die Tweede Bylae by die Permit van die Sentrale Kragontwikkelingsonderneming genoem, synde R5 per metrieke ton, van tyd tot tyd op die volgende wyse aangepas word:

Die koste van steenkool, uitgedruk as 'n gemiddelde koste per metrieke ton van die steenkool by genoemde kragstasies verbruik, moet vasgestel word vir elke kwartaal tot aan die einde van Maart, Junie, September en Desember, en indien die verskil tussen die koste van steenkool vir die kwartaal wat pas verstreke is en die basiese koste van R5 minder as 3,5c is, is die kWh-tarief wat gedurende die volgende kwartaal gehef moet word die genoemde koers van 0,67c; maar indien die genoemde koste van steenkool met 3,5c of meer van die basiese koste verskil, is die kWh-koers wat gedurende die volgende kwartaal gehef moet word die genoemde koers van 0,67c per kWh, vermeerder of verminder met 0,002c vir elke volledige vermeerdering of vermindering van 3,5c in die genoemde koste van steenkool bokant of onderkant die basiese koste;

(d) die netto bedrag wat ooreenkomstig paragrawe (a), (b) en (c) hiervan bepaal is, is onderworpe aan die algemene korting of algemene toeslag wat op die tydstip heers.

Tarief (B): *Klein kraggebruikers*

Vir 'n elektrisiteitstoevoer waarvan die maandelikse maksimum aanvraag selde 75 kVA en nooit 100 kVA oorskry nie, beskikbaar gestel teen 'n nominale spanning van 380 volt tussen fases en 220 volt tussen fase en neutraal, met uitsondering van toevoere ingevolge Tarief (C) gelewer, is daar—

(a) 'n diensgeld vir elke toevoerpunt van R8 per maand wat betaal moet word of elektrisiteit geneem word of nie;

(b) ten opsigte van elke toevoerpunt, 'n kWh-geld vir 500 kWh van die maandelikse verbruik, of die maandelikse verbruik, watter getal ook al die laagste is, teen 'n tarief van 5,4c per kWh;

(c) 'n kWh-geld teen 'n tarief van 2,7c per kWh vir kWh geneem bo en behalwe die kWh wat in (b) hierbo genoem word:

Met dien verstande dat die kWh-koers van 5,4c en 2,7c gebaseer op die koste van steenkool by die kragstasies van die Sentrale Kragontwikkelingsonderneming verbruik, met uitsondering van die kragstasies in (B), (C) en (D) van die Tweede Bylae by die Permit van die Sentrale Kragontwikkelingsonderneming genoem, synde R5 per metrieke ton, van tyd tot tyd op die volgende wyse aangepas met word:

Die koste van steenkool, uitgedruk as 'n gemiddelde koste per metrieke ton van die steenkool wat by genoemde kragstasies verbruik is, moet vasgestel word vir elke kwartaal tot aan die einde van Maart, Junie, September en Desember, en indien die verskil tussen die koste van steenkool vir die pas verstreke kwartaal en die basiese koste van R5 minder is as 17,5c, is die kWh-tarief wat in die volgende kwartaal toegepas moet word genoemde tariewe van 5,4c en 2,7c; maar indien die genoemde koste van steenkool met 17,5c of meer van die basiese koste verskil, is die kWh-tarief wat in die volgende kwartaal toegepas moet word die genoemde tariewe van 5,4c en 2,7c per kWh, vermeerder of verminder met 0,01c vir elke volledige vermeerdering of vermindering van 17,5c in die genoemde koste van steenkool bokant of onderkant die basiese koste;

(d) die netto bedrag ooreenkomstig paragrawe (a), (b) en (c) hiervan bepaal, is onderworpe aan die algemene korting of algemene toeslag wat op die tydstip heers.

Tarief (C): *Stedelike huishoudelike verbruikers*

Vir 'n elektrisiteitstoevoer vir huishoudelike doeleindes vir 'n private woning of blok woonstelle, binne 'n wettig gestigde dorp of binne 'n gebied wat deur die Lisensiehouer as soortgelyk aan 'n wettig gestigde dorp geag word, is daar—

(a) 'n diensgeld van R4 per maand ten opsigte van elke toevoerpunt;

(b) 'n heffing vir 300 kWh van die maandelikse verbruik, of die maandelikse verbruik, watter getal ook al die laagste is, teen 'n tarief van 5,4c per kWh: Met dien verstande dat, vir 'n toevoer aan 'n blok woonstelle, hierdie heffing bereken word op die grondslag van 300 kWh of die gemiddelde maandelikse verbruik per wooneenheid;

(c) 'n kWh-geld teen 'n tarief van 2,7c per kWh vir kWh geneem bo en behalwe die kWh in (b) hierbo vermeld:

Met dien verstande dat die kWh-tariewe van 5,4c en 2,7c per kWh, gebaseer op die koste van steenkool by die kragstasies van die Sentrale Kragontwikkelingsonderneming verbruik, met uitsondering van die kragstasies in (B), (C) en (D) van die Tweede Bylae by die Permit van die Sentrale Kragontwikkelingsonderneming genoem synde R5 per metrieke ton, van tyd tot tyd aangepas word op die wyse in paragraaf (c) van Tarief (B) uiteengesit;

(d) die netto bedrag bepaal ooreenkomstig paragrawe (a), (b) en (c) hiervan bepaal, is onderworpe aan die algemene korting of algemene toeslag wat op die tydstip heers.

Straatverligting

Waar die Lisensiehouer elektrisiteit voorsien vir straatverligting of soortgelyke openbare verligting en dit in stand hou, word die bedrag vir sodanige toevoer en diens by spesiale ooreenkoms tussen die Lisensiehouer en die verbruiker vasgestel.

Bogenoemde bedrae word, ooreenkomstig die bepalinge van artikel 29 van die Wet, verander om te voldoen aan spesiale omstandighede wat van toepassing is op die voorsiening van elektrisiteit aan sekere verbruikers en in sekere gebiede.

NOORD-KAAPLANDSE ONDERNEMING

Die standaardtariewe is soos hieronder uiteengesit. Hierdie tariewe is met ingang van Julie 1980 onderworpe aan 'n toeslag van 125 persent.

Tarief (A): *Grootkraggebruikers*

Vir 'n driefasige wisselstroomtoevoer aan verbruikers wie se aangemelde maksimum aanvraag 25 kilovoltampère of meer is, teen 'n frekwensie van 50 hertz en by 'n nominale spanning van 11 000 volt tussen fases, word die volgende gevorder:

(a) 'n Diensgeld van R7,30 per maand; plus

(b) 'n aanvraagprys van R2,30 vir elke kilovoltampère van die maksimum aanvraag wat in die maand voorsien is; plus

(c) 'n energieprys teen die koers van 0,275c per kilowatt uur (kWh) in die maand gelewer: Met dien verstande dat aangesien vermelde koers daarop gebaseer is dat die koste van steenkool wat by die kragstasies van die Sentrale Kragontwikkelingsonderneming verbruik word, met uitsondering van die kragstasies wat in (B) en (C) van die Tweede Bylae by die Permit van die Sentrale Kragontwikkelingsonderneming genoem word, R1,75 per metrieke ton is, dit van tyd tot tyd op die volgende wyse aangepas word:

Die koste van steenkool, uitgedruk as die gemiddelde koste per metrieke ton wat by genoemde kragstasies verbruik word, moet vir elke tydperk van drie maande tot aan die einde van Maart, Junie, September en Desember bepaal word en indien die verskil tussen die koste van steenkool vir die pas afgelope tydperk van drie maande en genoemde basiese prys van R1,75 minder is as 3,5c is die kWh-koers wat in die daaropvolgende drie maande toegepas moet word genoemde koers van 0,275c; maar indien genoemde steenkoolkoste met 3,5c of meer van die basiese koste verskil, dan is die kWh-koers wat in die daaropvolgende tydperk van drie maande toegepas moet word, genoemde koers van 0,275c per kWh, plus of min 0,002c vir elke volledige vermeerdering of vermindering van 3,5c van genoemde steenkoolkoste bo of onder die basiese koste

Tarief (B): Kleinkraggebruikers

Vir 'n toevoer waarvan die maksimum aanvraag selde meer as 50 kVA en nooit meer as 75 kVA is nie, en wat beskikbaar gestel word by a nominale spanning van 380 volt tussen fases en 220 volt tussen fase en neutraal, vir gebruik as beweegkrag vir of vir verwarming of vir elektrochemiese prosesse, word die volgende gevorder:

(a) 'n Diensgeld van R1,25 per maand; hierdie bedrag moet betaal word, ongeag daarvan of elektrisiteit verbruik word of nie; plus

(b) 'n aanvraagprys van 30c vir elke volle ampère van die maksimum aanvraag wat in die maand gelewer is: Met dien verstande egter dat die verbruiker minstens die minimum bedrag vir die meterinstallasie wat op daardie tydstip vir sy toevoer geïnstalleer is, moet betaal, naamlik:

Meterinstallasie vir die meet van 'n maksimum aanvraag	*Minimum bedrag*
	R
Van minder as 17 ampère	0,90
Van 17 tot 24 ampère	1,20
Van 25 tot 33 ampère	1,80
Van 34 tot 49 ampère	2,70
Van 50 tot 66 ampère	3,60
Van 67 tot 99 ampère	5,40
Van 100 tot 132 ampère	7,20
Van 133 tot 198 ampère	10,80
Van 199 tot 297 ampère	16,20
Van meer as 297 ampère	21,60

(c) 'n energieprys teen die koers van 0,83c per kWh in die maand gelewer: Met dien verstande dat aangesien vermelde koers daarop gebaseer is dat die koste van steenkool wat by die kragstasies van die Sentrale Kragontwikkelingsonderneming verbruik word, met uitsondering van die kragstasies wat in (B) en (C) van die Tweede Bylae by die Permit van die Sentrale Kragontwikkelingsonderneming genoem word, R1,75 per metrieke ton is, dit van tyd tot tyd op die volgende wyse aangepas word:

Die koste van steenkool, uitgedruk as die gemiddelde koste per metrieke ton wat by genoemde kragstasies verbruik word, moet vir elke tydperk van drie maande tot aan die einde van Maart, Junie, September en Desember bepaal word en indien die verskil tussen die koste van steenkool vir die pas afgelope tydperk van drie maande en genoemde basiese prys van R1,75 minder is as 17,5c, is die kWh-koers wat in die daaropvolgende drie maande toegepas moet word genoemde koers van 0,83c; maar indien genoemde steenkoolkoste met 17,5c of meer van die basiese koste verskil, dan is die kWh-koers wat in die daaropvolgende tydperk van drie maande toegepas moet word, genoemde koers van 0,83c per kWh plus of min 0,01c vir elke volledige vermeerdering of vermindering van 17,5c van genoemde steenkoolkoste bo of onder die basiese koste

Met dien verstande dat waar krag ingevolge hierdie tarief aan 'n verbruiker gelewer word, enige toevoer wat die verbruiker vir verligtings- en ander doeleindes in Tarief (C) van hierdie Bylae vermeld, op die perseel neem, by die toevoer ingevolge hierdie tarief ingesluit kan word.

Tarief (C): Huishoudelike gebruikers

Vir 'n toevoer aan private woonhuise en ander persele ten opsigte waarvan daar 'n "kameraanslag" gemaak is of gemaak kan word:

Alternatief (i).—Uniforme tarief:

(a) 'n Diensgeld van 55c per maand; hierdie bedrag moet betaal word, ongeag daarvan of elektrisiteit verbruik word of nie; plus

(b) 'n prys van 10c per kWh in die maand voorsien, met dien verstande dat 'n minimum bedrag van 85c per maand gevorder word, ongeag daarvan of elektrisiteit verbruik word of nie.

Alternatief (ii).—Kamertarief:

(a) 'n Diensgeld van 55c per maand; hierdie bedrag moet betaal word, ongeag daarvan of elektrisiteit verbruik word of nie; plus

(b) 'n bedrag van 42,5c per kamer per maand; hierdie bedrag of 85c per maand, watter een ook al die meeste is, word gevorder ongeag daarvan of elektrisiteit verbruik word of nie; plus

(c) 'n energieprys teen die koers van 0,83c per kWh gedurende die maand gelewer: Met dien verstande dat gemelde kWh-prys, aangesien dit daarop gebaseer is dat die koste van steenkool wat by die kragstasies van die Sentrale Kragontwikkelingsonderneming verbruik word, met uitsondering van die kragstasies wat in (B) en (C) van die Tweede Bylae tot die Permit van die Sentrale Kragontwikkelingsonderneming genoem word, R1,75 per metrieke ton, van tyd tot tyd op die wyse in paragraaf (c) van Tarief (B) uiteengesit, aangepas sal word:

Met dien verstande dat, indien die begin- of die beëindigingsdatum van enige toevoer sodanig is dat die toevoer slegs vir 'n gedeelte van 'n maand beskikbaar is, die bedrae wat ingevolge paragrawe (a) en (b) van Tarief (A), (a) en (b) van Tarief (B) en (a) van alternatief (i) van Tarief (C) en (a) en (b) van alternatief (ii) van Tarief (C) betaalbaar is, en die minimum bedrae in die tariewe uiteengesit, bereken moet word op 'n pro rata-grondslag vir die gedeelte van 'n maand van 30 dae waarin die toevoer beskikbaar is.

Straatverligting

Waar die Lisensiehouer elektrisiteit voorsien vir straatverligting of soortgelyke openbare verligting en dit in stand hou, word die bedrag vir sodanige elektrisiteit en diens by 'n spesiale ooreenkoms tussen die Lisensiehouer en die verbruiker vasgestel.

Bogenoemde pryse word, ooreenkomstig die bepalinge van artikel 29 van die Wet, verander om te voldoen aan spesiale omstandighede wat van toepassing is op die voorsiening van elektrisiteit aan sekere verbruikers.

WES-KAAPLANDSE ONDERNEMING

Die standaardtariewe is soos hieronder uiteengesit. Hierdie tariewe is met ingang van Julie 1980 onderworpe aan 'n toeslag van 12,5 persent.

Tarief (A): Groot kraggebruikers

Vir 'n toevoer aan 'n verbruiker wie se aangemelde maksimum aanvraag 25 kilovoltampère of meer van 'n driefasige wisselstroom is teen 'n frekwensie van 50 hertz en 'n ooreengekome spanning wat in die omgewing beskikbaar is, word die volgende gevorder:

(a) 'n Diensgeld van R20 per maand welke geld betaal moet word of enige elektrisiteit gebruik word of nie;

(b) 'n aanvraaggeld vir elke kilovoltampère van die maksimum aanvraag wat in die maand voorsien is, teen die koers van—

(i) R5,60 wanneer die toevoer gelewer word teen 'n nominale spanning bo 380/220 volt; of

(ii) R5,80 wanneer die toevoer gelewer word teen die nominale spanning van 380 volt tussen fases en 220 volt tussen fase en neutraal;

(c) 'n energieprys teen die koers van 0,74c per kWh gedurende die maand voorsien: Met dien verstande dat die genoemde kWh-koers, gebaseer op die koste van steenkool wat by die kragstasies van die Sentrale Kragontwikkelingsonderneming verbruik is, met uitsondering van die kragstasies in (B), (C) en (D) van die Tweede Bylae by die Permit van die Sentrale Kragontwikkelingsonderneming genoem, synde R5 per metrieke ton, van tyd tot tyd op die volgende wyse aangepas word:

Die koste van steenkool, uitgedruk as 'n gemiddelde koste per metrieke ton van die steenkool by genoemde kragstasies verbruik, moet vasgestel word vir elke kwartaal tot aan die

einde van Maart, Junie, September en Desember, en indien die verskil tussen die koste van steenkool vir die kwartaal wat pas verstreke is en die basiese koste van R5 minder as 3,5c is, is die kWh-tarief wat gedurende die volgende kwartaal gehef moet word die genoemde koers van 0,74c; maar indien die genoemde koste van steenkool met 3,5c of meer van die basiese koste verskil, is die kWh-koers wat gedurende die volgende kwartaal gehef moet word die genoemde koers van 0,74c per kWh, vermeerder of verminder met 0,002c vir elke volledige vermeerdering of vermindering van 3,5c in die genoemde koste van steenkool bokant of onderkant die basiese koste;

(d) die netto bedrag ingevolge paragrawe (a), (b) en (c) hiervan bepaal, is onderworpe aan die algemene korting of algemene toeslag wat op die tydstip heers.

Tarief (B): *Klein kraggebruikers*

Vir 'n elektrisiteitstoevoer waarvan die maandelikse maksimum aanvraag selde 75 kVA en nooit 100 kVA oorskry nie, beskikbaar gestel teen 'n nominale spanning van 380 volt tussen fases en 220 volt tussen fase en neutraal, met uitsondering van toevoere ingevolge Tarief (C) gelewer, is daar—

(a) 'n diensgeld vir elke toevoerpunt van R8 per maand wat betaal moet word of elektrisiteit geneem word of nie;

(b) ten opsigte van elke toevoerpunt, 'n kWh-geld vir 500 kWh van die maandelikse verbruik, of die maandelikse verbruik, watter getal ook al die laagste is, teen 'n tarief van 5,4c per kWh;

(c) 'n kWh-geld teen 'n tarief van 2,7c per kWh vir kWh geneem bo en behalwe die kWh wat in (b) hierbo genoem word:

Met dien verstande dat die kWh-koers van 5,4c en 2,7c gebaseer op die koste van steenkool by die kragstasies van die Sentrale Kragontwikkelingsonderneming verbruik, met uitsondering van die kragstasies in (B), (C) en (D) van die Tweede Bylae by die Permit van die Sentrale Kragontwikkelingsonderneming genoem, synde R5 per metrieke ton, van tyd tot tyd op die volgende wyse aangepas moet word

Die koste van steenkool, uitgedruk as 'n gemiddelde koste per metrieke ton van die steenkool wat by genoemde kragstasies verbruik is, moet vasgestel word vir elke kwartaal tot aan die einde van Maart, Junie, September en Desember, en indien die verskil tussen die koste van steenkool vir die pas verstreke kwartaal en die basiese koste van R5 minder is as 17,5c, is die kWh-tarief wat in die volgende kwartaal toegepas moet word genoemde tariewe van 5,4c en 2,7c; maar indien die genoemde koste van steenkool met 17,5c of meer van die basiese koste verskil, is die kWh-tarief wat in die volgende kwartaal toegepas moet word die genoemde tariewe van 5,4c en 2,7c per kWh, vermeerder of verminder met 0,01c vir elke volledige vermeerdering of vermindering van 17,5c in die genoemde koste van steenkool bokant of onderkant die basiese koste;

(d) die netto bedrag bepaal ingevolge paragrawe (a), (b) en (c) hiervan is onderworpe aan die algemene korting of algemene toeslag wat op die tydstip heers.

Tarief (C): *Stedelike huishoudelike verbruikers*

Vir 'n elektrisiteitstoevoer vir huishoudelike doeleindes vir 'n private woning of blok woonstelle, binne 'n wettig gestigde dorp of binne 'n gebied wat deur die Lisensiehouer as soortgelyk aan 'n wettig gestigde dorp geag word, is daar—

(a) 'n diensgeld van R2,65 per maand ten opsigte van elke toevoerpunt;

(b) 'n heffing vir 300 kWh van die maandelikse verbruik, of die maandelikse verbruik, watter getal ook al die laagste is, teen 'n tarief van 4,65c per kWh: Met dien verstande dat, vir 'n toevoer aan 'n blok woonstelle, hierdie heffing bereken word op die grondslag van 300 kWh of die gemiddelde maandelikse verbruik per wooneenheid:

(c) 'n kWh-geld teen 'n tarief van 2,7c per kWh vir kWh geneem bo en behalwe die kWh in (b) hierbo vermeld:

Met dien verstande dat die kWh tariewe van 4,65c en 2,7c per kWh, gebaseer op die koste van steenkool by die kragstasies van die Sentrale Kragontwikkelingsonderneming verbruik, met uitsondering van die kragstasies in (B), (C) en (D) van die Tweede Bylae by die Permit van die Sentrale Kragontwikkelingsonderneming genoem, synde R5 per metrieke ton, van tyd tot tyd aangepas word op die wyse in paragraaf (c) van Tarief (B) uiteengesit:

(d) die netto bedrag ingevolge paragrawe (a), (b) en (c) hiervan bepaal, is onderworpe aan die algemene korting of algemene toeslag wat op die tydstip heers.

Straatverligting

Waar die Lisensiehouer elektrisiteit vir straatverligting of soortgelyke openbare verligting voorsien en dit in stand hou, word die bedrag vir sodanige elektrisiteit en diens by 'n spesiale ooreenkoms tussen die Lisensiehouer en die verbruiker vasgestel.

Bogenoemde bedrae word, ooreenkomstig die bepalinge van artikel 29 van die Wet, verander om te voldoen aan spesiale omstandighede wat van toepassing is op die voorsiening van elektrisiteit aan sekere verbruikers.

ORANJERIVIERONDERNEMING

Die standaardtariewe is soos hieronder uiteengesit. Hierdie tariewe is met ingang van Julie 1980 onderworpe aan 'n toeslag van 55 persent.

Tarief (A): *Groot kraggebruikers*

Vir 'n toevoer aan 'n verbruiker wie se aangemelde maksimum aanvraag 25 kilovoltampère of meer van 'n driefasige wisselstroom is teen 'n frekwensie van 50 hertz en 'n ooreengekome spanning wat in die omgewing beskikbaar is, word die volgende gevorder:

(a) 'n Diensgeld van R20 per maand welke geldo betaal moet word of enige elektrisiteit gebruik word of nie;

(b) 'n aanvraaggeld vir elke kilovoltampère van die maksimum aanvraag wat in die maand voorsien is, teen die koers van—

(i) R4,40 wanneer die toevoer gelewer word teen 'n nominale spanning bo 380/220 volt; of

(ii) R4,65 wanneer die toevoer gelewer word teen die nominale spanning van 380 volt tussen fases en 220 volt tussen fase en neutraal;

(c) 'n energieprys teen die koers van 0,67c per kWh-elektrisiteit gedurende die maand voorsien: Met dien verstande dat die genoemde kWh-koers, gebaseer op die koste van steenkool wat by die kragstasies van die Sentrale Kragontwikkelingsonderneming verbruik is, met uitsondering van die kragstasies in (B), (C) en (D) van die Tweede Bylae by die Permit van die Sentrale Kragontwikkelingsonderneming genoem, synde R5 per metrieke ton, van tyd tot tyd op die volgende wyse aangepas word:

Die koste van steenkool, uitgedruk as 'n gemiddelde koste per metrieke ton van die steenkool by genoemde kragstasies verbruik, moet vasgestel word vir elke kwartaal tot aan die einde van Maart, Junie, September en Desember, en indien die verskil tussen die koste van steenkool vir die kwartaal wat pas verstreke is en die basiese koste van R5 minder as 3,5c, is, is die kWh-tarief wat gedurende die volgende kwartaal gehef moet word die genoemde koers van 0,67c; maar indien die genoemde koste van steenkool met 3,5c of meer van die basiese koste verskil, is die kWh-koers wat gedurende die volgende kwartaal gehef moet word die genoemde koers van 0,67c per kWh, vermeerder of verminder met 0,002c vir elke volledige vermeerdering of vermindering van 3,5c in die genoemde koste van steenkool bokant of onderkant die basiese koste.

(d) die netto bedrag wat ooreenkomstig paragrawe (a), (b) en (c) hiervan bepaal word, is onderworpe aan die algemene korting of algemene toeslag wat op die tydstip heers.

Tarief (B) *Klein kraggebruikers*

Vir 'n elektrisiteitstoevoer waarvan die maandelikse maksimum aanvraag selde 75 kVA en nooit 100 kVA oorskry nie, beskikbaar gestel teen 'n nominale spanning van 380 volt tussen fases en 220 volt tussen fase en neutraal, met uitsondering van toevoere ingevolge Tarief (C) gelewer, is daar—

(a) 'n diensgeld vir elke toevoerpunt van R8 per maand wat betaal moet word of elektrisiteit geneem word of nie;

(b) ten opsigte van elke toevoerpunt, 'n kWh-geld vir 500 kWh van die maandelikse verbruik, of die maandelikse verbruik, watter getal ook al die laagste is, teen 'n tarief van 5,4c per kWh:

(c) 'n kWh-geld teen 'n tarief van 2,7c per kWh vir kWh geneem bo en behalwe die kWh wat in (b) hierbo genoem word:

Met dien verstande dat die kWh-koerse van 5,4c en 2,7c, gebaseer op die koste van steenkool by die kragstasies van die Sentrale Kragontwikkelingsonderneming verbruik, met uitsondering van die kragstasies in (B), (C) en (D) van die Tweede Bylae by die Permit van die Sentrale Kragontwikkelingsonderneming genoem, synde R5 per metrieke ton, van tyd tot tyd op die volgende wyse aangepas moet word

Die koste van steenkool, uitgedruk as 'n gemiddelde koste per metrieke ton van die steenkool wat by genoemde kragstasies verbruik is, moet vasgestel word vir elke kwartaal tot aan die einde van Maart, Junie, September en

CONT

University of Fort Hare
Together in Excellence

Desember, en indien die verskil tussen die koste van steenkool vir die pas verstreke kwartaal en die basiese koste van R5 minder is as 17,5c, is die kWh-tarief wat in die volgende kwartaal toegepas moet word genoemde tarief van 5,4c en 2,7c; maar indien die genoemde koste van steenkool met 17,5c of meer van die basiese koste verskil, is die kWh-tarief wat in die volgende kwartaal toegepas moet word die genoemde tariewe van 5,4c en 2,7c per kWh, vermeerder of verminder met 0,01c vir elke volledige vermeerdering of vermindering van 17,5c in die genoemde koste van steenkool bokant of onderkant die basiese koste;

(d) die netto bedrag ooreenkomstig paragrawe (a), (b) en (c) hiervan bepaal, is onderworpe aan die algemene korting of algemene toeslag wat op die tydstip heers.

Tarief (C): *Stedelike huishoudelike verbruikers*

Vir 'n elektrisiteitstoevoer vir huishoudelike doeleindes vir 'n private woning of blok woonstelle, binne 'n wettig gestigde dorp of binne 'n gebied wat deur die Lisensiehouer as soortgelyk aan 'n wettig gestigde dorp geag word, is daar—

(a) 'n diensgeld van R4 per maand ten opsigte van elke toevoerpunt;

(b) 'n heffing vir 300 kWh van die maandelikse verbruik, of die maandelikse verbruik, watter getal ook al die laagste is, teen 'n tarief van 5,4c per kWh; met dien verstande dat, vir 'n toevoer aan 'n blok woonstelle, hierdie heffing bereken word op die grondslag van 300 kWh of die gemiddelde maandelikse verbruik per wooneenheid;

(c) 'n kWh-geld teen 'n tarief van 2,7c per kWh geneem bo en behalwe die kWh in (b) hierbo vermeld:

Met dien verstande dat die kWh-tariewe van 5,4c en 2,7c per kWh, gebaseer op die koste van steenkool by die kragstasies van die Sentrale Kragontwikkelingsonderneming verbruik, met uitsondering van die kragstasies in (B), (C) en (D) van die Tweede Bylae by die Permit van die Sentrale Kragontwikkelingsonderneming genoem, synde R5 per metrieke ton, van tyd tot tyd aangepas word op die wyse in paragraaf (c) van Tarief (B) uiteengesit;

(d) die netto bedrag ooreenkomstig paragrawe (a), (b) en (c) hiervan bepaal, is onderworpe aan die algemene korting of algemene toeslag wat op die tydstip heers.

Straatverligting

Waar die Lisensiehouer elektrisiteit vir enige straatverligting of soortgelyke openbare verligting verskaf en dit in stand hou, word die bedrag vir sodanige elektrisiteit en diens by 'n spesiale ooreenkoms tussen die Lisensiehouer en die verbruiker vasgestel.

Bogenoemde bedrae verskil ingevolge die bepalinge van artikel 29 van die Wet om te voldoen aan spesiale omstandighede wat op die voorsiening van elektrisiteit aan sekere verbruikers van toepassing is.

NATALSE ONDERNEMING

Die standaardtariewe is soos hieronder uiteengesit. Met ingang van Julie 1980 word daar geen algemene korting of algemene toeslag gehef nie.

Tarief (A): *Groot kraggebruikers*

Vir 'n toevoer aan 'n verbruiker wie se aangemelde maksimum aanvraag 25 kilovoltampère of meer van 'n driefasige wisselstroom is teen 'n frekwensie van 50 hertz en 'n ooreengekome spanning wat in die omgewing beskikbaar is, word die volgende gevorder:

(a) 'n Diensgeld van R20 per maand welke gelde betaal moet word of enige elektrisiteit gebruik word of nie;

(b) 'n aanvraaggeld vir elke kilovoltampère van die maksimum aanvraag wat in die maand voorsien is, teen die koers van—

(i) R5,25 wanneer die toevoer gelewer word teen 'n nominale spanning van 132 000 volt tussen fases;

(ii) R5,50 wanneer die toevoer gelewer word teen 'n nominale spanning tussen fases onder 132 000 volt maar bo 380 volt; of

(iii) R5,65 wanneer die toevoer gelewer word teen die nominale spanning van 380 volt tussen fases en 220 volt tussen fase en neutraal;

(c) 'n energieprys teen die koers van 0,67c per kWh gedurende die maand voorsien: Met dien verstande dat die genoemde kWh-koers, gebaseer op die koste van steenkool wat by die kragstasies van die Sentrale Kragontwikkelingsonderneming verbruik is, met uitsondering van die kragstasies in (B), (C) en (D) van die Tweede Bylae by die Permit van die Sentrale Kragontwikkelingsonderneming genoem, synde R5 per metrieke ton, van tyd tot tyd op die volgende wyse aangepas word:

Die koste van steenkool, uitgedruk as 'n gemiddelde koste per metrieke ton van die steenkool by genoemde kragstasies verbruik, moet vasgestel word vir elke kwartaal tot aan die einde van Maart, Junie, September en Desember, en indien die verskil tussen die koste van steenkool vir die kwartaal wat pas verstreke is en die basiese koste van R5 minder as 3,5c is, is die kWh-tarief wat gedurende die volgende kwartaal gehef moet word die genoemde koers van 0,67c; maar indien die genoemde koste van steenkool met 3,5c of meer van die basiese koste verskil, is die kWh-hoers wat gedurende die volgende kwartaal gehef moet word die genoemde koers van 0,67c per kWh, vermeerder of verminder met 0,002c vir elke volledige vermeerdering of vermindering van 3,5c in die genoemde koste van steenkool bokant of onderkant die basiese koste;

(d) die netto bedrag ooreenkomstig paragrawe (a), (b) en (c) hiervan bepaal, is onderworpe aan die algemene korting of algemene toeslag wat op die tydstip heers.

Tarief (B): *Klein kraggebruikers*

Vir 'n elektrisiteitstoevoer waarvan die maandelikse maksimum aanvraag selde 75 kVA en nooit 100 kVA oorskry nie, beskikbaar gestel teen 'n nominale spanning van 380 volt tussen fases en 220 volt tussen fase en neutraal, met uitsondering van toevoere ingevolge Tarief (C) gelewer, is daar—

(a) 'n diensgeld vir elke toevoerpunt van R8 per maand wat betaal moet word of elektrisiteit geneem word of nie;

(b) ten opsigte van elke toevoerpunt, 'n kWh-geld vir 500 kWh van die maandelikse verbruik, of die maandelikse verbruik, watter getal ook al die laagste is, teen 'n tarief van 4,3c per kWh;

(c) 'n kWh-geld teen 'n tarief van 2,15c per kWh vir kWh geneem bo en behalwe die kWh wat in (b) hierbo genoem word:

Met dien verstande dat die kWh-koerse van 4,3c en 2,15c per kWh, gebaseer op die koste van steenkool by die kragstasies van die Sentrale Kragontwikkelingsonderneming verbruik, met uitsondering van die kragstasies in (B), (C) en (D) van die Tweede Bylae by die Permit van die Sentrale Kragontwikkelingsonderneming genoem, synde R5 per metrieke ton, van tyd tot tyd op die volgende wyse aangepas moet word:

Die koste van steenkool, uitgedruk as 'n gemiddelde koste per metrieke ton van die steenkool wat by genoemde kragstasies verbruik is, moet vasgestel word vir elke kwartaal tot aan die einde van Maart, Junie, September en Desember, en indien die verskil tussen die koste van steenkool vir die pas verstreke kwartaal en die basiese koste van R5 minder is as 17,5c, is die kWh-tarief wat in die volgende kwartaal toegepas moet word genoemde tariewe van 4,3c en 2,15c; maar indien die genoemde koste van steenkool met 17,5c of meer van die basiese koste verskil, is die kWh-tarief wat in die volgende kwartaal toegepas moet word die genoemde tariewe van 4,3c en 2,15c per kWh, vermeerder of verminder met 0,01c vir elke volledige vermeerdering of vermindering van 17,5c in die genoemde koste van steenkool bokant of onderkant die basiese koste;

(d) die netto bedrag ingevolge paragraaf (a) hiervan bepaal, is onderworpe aan die algemene korting of algemene toeslag wat op die tydstip heers.

Tarief (C): *Stedelike huishoudelike verbruikers*

Vir 'n elektrisiteitstoevoer vir huishoudelike doeleindes vir 'n private woning of blok woonstelle, binne 'n wettig gestigde dorp of binne 'n gebied wat deur die Lisensiehouer as soortgelyk aan 'n wettig gestigde dorp geag word, is daar—

(a) 'n diensgeld van R4 per maand ten opsigte van elke toevoerpunt;

(b) 'n heffing van 300 kWh van die maandelikse verbruik, of die maandelikse verbruik, watter getal ook al die laagste is, teen 'n tarief van 4,3c per kWh: Met dien verstande dat, vir 'n toevoer aan 'n blok woonstelle, hierdie heffing bereken word op die grondslag van 300 kWh of die gemiddelde maandelikse verbruik per wooneenheid;

(c) 'n kWh-geld teen 'n tarief van 2,15c per kWh vir kWh geneem bo en behalwe die kWh in (b) hierbo vermeld:

Met dien verstande dat die kWh tariewe van 4,3c en 2,15c per kWh, gebaseer op die koste van steenkool by die kragstasies van die Sentrale Kragontwikkelingsonderneming

verbruik, met uitsondering van die kragstasies in (B), (C) en (D) van die Tweede Bylae by die Permit van die Sentrale Kragontwikkelingsonderneming genoem, synde R5 per metrieke ton, van tyd tot tyd aangepas word op die wyse in paragraaf (c) van Tarief (B) uiteengesit;

(d) die netto bedrag ooreenkomstig paragrawe (a), (b) en (c) hiervan bepaal, is onderworpe aan die algemene korting of algemene toeslag wat op die tydstip heers.

Straatverligting

Waar die Lisensiehouer elektrisiteit vir straatverligting of soortgelyke openbare verligting verskaf en dit in stand hou, word die bedrag vir sodanige elektrisiteit en diens by 'n spesiale ooreenkoms tussen die Lisensiehouer en die verbruiker vasgestel.

Bogenoemde prys verskil ingevolge die bepalings van artikel 29 van die Wet om te voldoen aan spesiale omstandighede wat op die voorsiening van elektrisiteit aan sekere verbruikers van toepassing is.

OOS-TRANSVAALSE ONDERNEMING

Die standaardtariewe is soos hieronder uiteengesit. Hierdie tariewe is met ingang van Julie 1980 onderworpe aan 'n korting van 10 persent.

Tarief (A): *Groot kragverbruikers*

Vir 'n toevoer aan 'n verbruiker wie se aangemelde maksimum aanvraag 25 kilovoltampère of meer van 'n driefasige wisselstroom is teen 'n frekwensie van 50 hertz en 'n ooreengekome spanning wat in die omgewing beskikbaar is met dien verstande dat—

(a) 'n afsonderlike ooreenkoms aangegaan moet word vir elke afsonderlike myn, werke of installasie van die verbruiker;

(b) instemming om die toevoer by meer as een toevoerpunt te verskaf, of om dit onder meer as een spanning by die toevoerpunt te verskaf, in elke geval by die Lisensiehouer sal berus.

Die tarief behels—

(a) 'n basiese vordering van R25 per maand welke gelde betaal moet word of enige elektrisiteit gebruik word of nie;

(b) aanvraaggeld teen onderstaande koers vir elke kilovoltampère van die maksimum gelyktydige aanvraag waarin daar gedurende die maand voorsien is by al die toevoerpunte waarop daar kragtens die kontrak ooreengekom is:

(i) R5,75 wanneer die toevoer gelewer word teen 'n nominale spanning bo 380/220 volt; of

(ii) R5,90 wanneer die toevoer gelewer word teen die nominale spanning van 380 volt tussen fases en 220 volt tussen fase en neutraal;

(c) 'n kWh-prys teen die koers van 0,95c per kWh-elektrisiteit gedurende die maand voorsien: Met dien verstande dat die genoemde kWh-koers, gebaseer op die gemiddelde koste van steenkool wat by die kragstasies van die Sentrale Kragontwikkelingsonderneming verbruik is, met uitsondering van die kragstasies in (B), (C) en (D) van die Tweede Bylae by die Permit van die Sentrale Kragontwikkelingsonderneming genoem, synde R8 per metrieke ton, van tyd tot tyd op die volgende wyse aangepas word:

Die koste van steenkool, uitgedruk as 'n gemiddelde koste per metrieke ton van die steenkool by genoemde kragstasies verbruik, moet vasgestel word vir elke kwartaal tot aan die einde van Maart, Junie, September en Desember, en indien die verskil tussen die gemiddelde koste van steenkool vir die kwartaal wat pas verstreke is en die basiese koste van R8 minder as 3,5c is, is die kWh-tarief wat gedurende die volgende kwartaal gehef moet word die genoemde koers van 0,95c; maar indien die genoemde gemiddelde koste van steenkool met 3,5c of meer van die basiese koste verskil, is die kWh-koers wat gedurende die volgende kwartaal gehef moet word die genoemde koers van 0,95c per kWh, vermeerder of verminder met 0,002c vir elke volledige vermeerdering of vermindering van 3,5c in die genoemde koste van steenkool bokant of onderkant die basiese koste.

Om rekening te hou met die uitwerking van die algemene korting of algemene toeslag wat van toepassing is in die gebied waarop hierdie lisensie betrekking het, moet die vermeerdering of vermindering wat soos hierbo bereken is, gewysig word deur dit te vermenigvuldig met die faktor

$$\frac{1}{1+\frac{\text{algemene toeslag}}{100}}$$

indien 'n algemene toeslag van krag is, of met die faktor

$$\frac{1}{1-\frac{\text{algemene korting}}{100}}$$

indien 'n algemene korting op die tydstip geld;

(d) ten opsigte van elke elektrisiteitstoevoer wat by meer as een toevoerpunt aan die verbruiker verskaf word, is daar 'n bykomende vordering wat bereken word op die verskil tussen die som van die nie-gelyktydige maksimum aanvrae, gedurende die maand by elke toevoerpunt gemeet, en die maksimum gelyktydige aanvraag, waarna daar in paragraaf (b) hiervan verwys word, teen die koers van R1 per maand per kilovoltampère;

(e) die netto bedrag ingevolge paragraaf (a), (b) en (c) hiervan vasgestel, is onderworpe aan die algemene afslag of die algemene toeslag wat op daardie tydstip van toepassing is.

Tarief (B): *Klein kraggebruikers*

Vir 'n elektrisiteitstoevoer waarvan die maandelikse maksimum aanvraag nooit 100 kVA oorskry nie, beskikbaar gestel teen 'n nominale spanning van 380 volt tussen fases en 220 volt tussen fase en neutraal, met uitsondering van toevoere ingevolge Tarief (C) gelewer, is daar—

(a) 'n basiese vordering vir elke toevoerpunt van R10 per maand wat betaal moet word of elektrisiteit geneem word of nie;

(b) ten opsigte van elke toevoerpunt, 'n kWh-geld vir 500 kWh van die maandelikse verbruik, of die maandelikse verbruik, watter getal ook al die laagste is, teen 'n tarief van 4,9c per kWh;

(c) 'n kWh-geld teen 'n tarief van 2,9c per kWh vir kWh geneem bo en behalwe die kWh wat in (b) hierbo genoem word: Met dien verstande dat die kWh-koers van 4,9c en 2,9c per kWh, gebaseer op die gemiddelde koste van steenkool by die kragstasies van die Sentrale Kragontwikkelingsonderneming verbruik, met uitsondering van die kragstasies in (B), (C) en (D) van die Tweede Bylae by die Permit van die Sentrale Kragontwikkelingsonderneming genoem, synde R8 per metrieke ton, van tyd tot tyd op die volgende wyse aangepas moet word:

Die koste van steenkool, uitgedruk as 'n gemiddelde koste per metrieke ton van die steenkool wat by genoemde kragstasies verbruik is, moet vasgestel word vir elke kwartaal tot aan die einde van Maart, Junie, September en Desember, en indien die verskil tussen die gemiddelde koste van steenkool vir die pas verstreke kwartaal en die basiese koste van R8 minder is as 17,5c, is die kWh-tarief wat in die volgende kwartaal toegepas moet word die genoemde tarief van 4,9c en 2,9c; maar indien die genoemde koste van steenkool met 17,5c of meer van die basiese koste verskil, is die kWh-tarief wat in die volgende kwartaal toegepas moet word die genoemde tarief van 4,9c en 2,9c per kWh, vermeerder of verminder met 0,01c vir elke volledige vermeerdering of vermindering van 17,5c in die genoemde koste van steenkool bokant of onderkant die basiese koste.

Om rekening te hou met die uitwerking van die algemene korting of algemene toeslag wat van toepassing is in die gebied waarop hierdie lisensie betrekking het, moet die vermeerdering of vermindering wat soos hierbo bereken is, gewysig word deur dit te vermenigvuldig met die faktor

$$\frac{1}{1+\frac{\text{algemene toeslag}}{100}}$$

indien 'n algemene toeslag van krag is, of met die faktor

$$\frac{1}{1-\frac{\text{algemene korting}}{100}}$$

indien 'n algemene korting op die tydstip geld;

(d) die netto bedrag ingevolge paragraaf (a), (b) en (c) hiervan vasgestel, is onderworpe aan die algemene afslag of die algemene toeslag wat op daardie tydstip van toepassing is.

Tarief (C): *Stedelike huishoudelike verbruikers*

Vir 'n elektrisiteitstoevoer vir huishoudelike doeleindes vir 'n private woning of 'n blok woonstelle, of vir 'n kerk, saal, ouetehuis of perseel van dergelike aard, binne 'n wettige dorp of binne 'n gebied wat deur die Lisensiehouer as soortgelyk aan 'n wettige dorp beskou word, is daar—

(a) 'n basiese vordering van R5 per maand ten opsigte van elke toevoerpunt;

(b) 'n heffing vir 300 kWh van die maandelikse verbruik, of die maandelikse verbruik, watter getal ook al die laagste is, teen 'n tarief van 4,9c per kWh: Met dien verstande dat, vir 'n toevoer aan 'n blok woonstelle, hierdie heffing bereken word op die grondslag van 300 kWh of die gemiddelde maandelikse verbruik per wooneenheid;

(c) 'n kWh-geld teen 'n tarief van 2,9c per kWh vir kWh geneem bo en behalwe die kWh in (b) hierbo vermeld: Met dien verstande dat die kWh-tarief van 4,9c en 2,9c per kWh gebaseer op die gemiddelde koste van steenkool by die kragstasies van die Sentrale Kragontwikkelingsonderneming verbruik, met uitsondering van die kragstasies in (B), (C) en (D) van die Tweede Bylae by die Permit van die Sentrale Kragontwikkelingsonderneming genoem, synde R8 per metrieke ton, van tyd tot tyd aangepas word op die wyse in paragraaf (c) van Tarief (B) uiteengesit;

(d) die netto bedrag ingevolge paragraaf (a), (b) en (c) hiervan vasgestel, is onderworpe aan die algemene afslag of die algemene toeslag wat op daardie tydstip van toepassing is.

Straatverligting

Waar die Lisensiehouer elektrisiteit voorsien vir straatverligting of soortgelyke openbare verligting en dit in stand hou, word die bedrag vir sodanige elektrisiteit en diens by 'n spesiale ooreenkoms tussen die Lisensiehouer en die verbruiker vasgestel.

Bogenoemde bedrae word, ooreenkomstig die bepalinge van artikel 29 van die Wet, verander om te voldoen aan spesiale omstandighede wat van toepassing is op die voorsiening van elektrisiteit aan sekere verbruikers en in sekere gebiede.

RANDSE EN ORANJE-VRYSTAATSE ONDERNEMING

Tarief (A): *Groot kraggebruikers*

Vir elektrisiteit wat ingevolge 'n enkele kontrak voorsien of beskikbaar gestel word aan 'n verbruiker wie se aangemelde maksimum aanvraag 25 kilowatt of meer is, van driefasewisselstroom teen 'n frekwensie van 50 hertz en teen 'n ooreengekome spanning wat in die omgewing beskikbaar is, met dien verstande dat—

(i) afsonderlike ooreenkomste aangegaan word ten opsigte van elke afsonderlike myn of werkplek of installasie van die verbruiker;

(ii) instemming om die toevoer by meer as een toevoerpunt of teen meer as een spanning by die toevoerpunt te voorsien, berus in elke geval by die goeddunke van die Lisensiehouer.

(a) Die tarief bestaan uit—

(i) 'n basiese vordering van R25 per maand welke vordering betaalbaar is of elektrisiteit geneem word of nie;

(ii) 'n aanvraaggeld teen die koers van R7 per maand per kilowatt van die maksimum gelyktydige aanvraag gedurende die maand voorsien by alle toevoerpunte waarop ingevolge die kontrak ooreengekom is;

(iii) 'n energieprys teen die koers van 1,05c per kWh-elektrisiteit gedurende die maand voorsien:

Met dien verstande dat die genoemde kWh-koers, gebaseer op die gemiddelde koste van steenkool wat by die kragstasies van die Sentrale Kragontwikkelingsonderneming verbruik is, met uitsondering van die kragstasies in (B), (C) en (D) van die Tweede Bylae by die Permit van die Sentrale Kragontwikkelingsonderneming genoem, synde R8 per metrieke ton, van tyd tot tyd op die volgende wyse aangepas word:

Die koste van steenkool, uitgedruk as 'n gemiddelde koste per metrieke ton van die steenkool by genoemde kragstasies verbruik, moet vasgestel word vir elke kwartaal tot aan die einde van Maart, Junie, September en Desember, en indien die verskil tussen die gemiddelde koste van steenkool vir die kwartaal wat pas verstreke is en die basiese koste van R8 minder as 3,5c is, is die kWh-tarief wat gedurende die volgende kwartaal gehef moet word die genoemde koers van 1,05c; maar indien die genoemde gemiddelde koste van steenkool met 3,5c of meer van die basiese koste verskil, is die kWh-koers wat gedurende die volgende kwartaal gehef moet word die genoemde koers van 1,05c per kWh vermeerder of verminder met 0,0022c vir elke volledige vermeerdering of vermindering van 3,5c in die genoemde koste van steenkool bokant of onderkant die basiese koste.

Om rekening te hou met die uitwerking van die algemene korting of algemene toeslag wat van toepassing is in die gebied waarop die Randse lisensie betrekking het, moet die vermeerdering of vermindering wat soos hierbo bereken is, gewysig word deur dit te vermenigvuldig met die faktor

$$\frac{1}{1+\frac{\text{algemene toeslag}}{100}}$$

indien 'n algemene toeslag van krag is, of met die faktor

$$\frac{1}{1-\frac{\text{algemene korting}}{100}}$$

indien 'n algemene korting op die tydstip geld.

(b) Die totaal vir die maand van die diensgeld, aanvraaggeld en energieprys soos voornoem, is onderworpe aan 'n afslag van 10 persent van die bedrag, indien van toepassing, waarmee die genoemde totaal R1 500 oorskry.

(c) Ten opsigte van elke elektrisiteitstoevoer wat by meer as een toevoerpunt aan die verbruiker voorsien word, is daar 'n bykomende heffing bereken volgens die verskil tussen die som van die nie-gelyktydige maksimum aanvrae gedurende die maand by elke toevoerpunt geneem, en die maksimum gelyktydige aanvraag in paragraaf (a) (ii) hiervan vermeld, teen 'n tarief van R1,10 per maand per kilowatt.

(d) Die som van die netto bedrag ingevolge paragraaf (b) bereken en die bykomende heffing ingevolge paragraaf (c) hiervan, is onderworpe aan die algemene afslag of algemene toeslag wat op daardie tydstip van toepassing is. Met ingang van Julie 1980 is daar 'n algemene korting van 8 persent in die Gevestigde Gebied en 'n algemene toeslag van 5 persent in die Uitbreidingsgebied.

(e) Die standaardpryse wat die Lisensiehouer moet vra, is dit wat hierin vermeld word, maar dit is aan die voorbehoud onderworpe dat by die vasstelling van die voorwaardes van kragvoorsiening aan verbruikers die voorbehoud by artikel 29 (1) en subartikel (3) van artikel 30 van die Wet of enige herverordening of wysiging daarvan in ag geneem is.

In alle gevalle waar genoemde voorbehoud of genoemde subartikel van toepassing is op 'n verbruiker wat ingevolge hierdie tarief voorsien word op grond van die feit dat die koste van uitbreiding- of transmissie- en/of distribusiestelsels wat nodig is vir die oorbring en lewering van elektrisiteit aan die verbruikers abnormaal hoog sal wees in verhouding tot die hoeveelheid elektrisiteit wat aanvanklik deur sodanige verbruikers benodig word, moet die voorwaardes van kragvoorsiening aan genoemde verbruikers bepaal word met inagneming van die voorwaardes dat die minimum inkomste wat genoemde verbruikers aan die Lisensiehouer moet betaal sodanig moet wees dat dit die volgende dek:

(i) Die koste in verband met die kapitaaluitgawes wan aangegaan is om die transmissie- en/of distribusie-stelsels vir die oorbring of lewering van elektrisiteit aan genoemde verbruikers uit te brei en 'n toeslag wat na die mening van die Lisensiehouer redelik is om die bykomende koste te dek wat deur hom aangegaan is om sodanige uitbreidings te bedryf en in stand te hou; en

(ii) 'n vordering vir die elektrisiteit aan genoemde verbruikers gelewer wat maandeliks bereken word teen die tarief van 1,31 sent per kWh plus die aanpassing (as daar is) wat gedurende die maand van toepassing is op die skommeling in die steenkoolprys wat ooreenkomstig subklousule (a) (iii) van hierdie tarief vasgestel word.

Die vordering ingevolge (e) (ii) is onderworpe aan die algemene afslag of algemene toeslag wat op die tydstip geld.

Tarief (B): *Klein kraggebruikers*

Vir 'n elektrisiteitstoevoer waarvan die maandelikse maksimum aanvraag nie 100 kW oorskry nie, en wat beskikbaar gestel word teen 'n nominale spanning van 380 volt tussen

fases en 220 volt tussen fase en neutraal, of soos anders ooreengekom, behalwe toevoere wat ingevolge Tarief (C) gelewer word—

(a) is daar—

(i) 'n basiese vordering van R12 per maand ten opsigte van elke toevoerpunt, welke vordering betaalbaar is of elektrisiteit geneem word of nie;

(ii) ten opsigte van elke toevoerpunt, 'n kWh-geld vir 500 kWh van die maandelikse verbruik, of die maandelikse verbruik, watter getal ook al die laagste is, teen 'n tarief van 5,3c per kWh;

(iii) 'n energieprys teen 'n tarief van 2,9c per kWh vir kWh geneem bo en behalwe die kWh wat in (ii) hierbo genoem word:

Met dien verstande dat die kWh-koers van 5,3c en 2,9c per kWh, gebaseer op die gemiddelde koste van steenkool by die kragstasies van die Sentrale Kragontwikkelingsonderneming verbruik, met uitsondering van die kragstasies in (B), (C) en (D) van die Tweede Bylae by die Permit van die Sentrale Kragontwikkelingsonderneming genoem synde R8 per metrieke ton, van tyd tot tyd op die volgende wyse aangepas moet word:

Die koste van steenkool, uitgedruk as 'n gemiddelde koste per metrieke ton van die steenkool wat by genoemde kragstasies verbruik is, moet vasgestel word vir elke kwartaal tot aan die einde van Maart, Junie, September en Desember, en indien die verskil tussen die genoemde koste van steenkool vir die pas verstreke kwartaal en die basiese koste van R8 minder is as 17,5c, is die kWh-tarief wat in die volgende kwartaal toegepas moet word genoemde tarief van 5,3c en 2,9c; maar indien die genoemde koste van steenkool met 17,5c of meer van die basiese koste verskil, is die kWh-tarief wat in die volgende kwartaal toegepas moet word die genoemde tarief van 5,3c en 2,9c per kWh, vermeerder of verminder met 0,01c vir elke volledige vermeerdering of vermindering van 17,5c in die genoemde koste van steenkool bokant of onderkant die basiese koste.

Om rekening te hou met die uitwerking van die algemene korting of algemene toeslag wat van toepassing is in die gebied waarop die Randse lisensie betrekking het, moet die vermeerdering of vermindering wat soos hierbo bereken is, gewysig word deur dit te vermenigvuldig met die faktor

$$\frac{1}{1+\frac{\text{algemene toeslag}}{100}}$$

indien 'n algemene toeslag van krag is, of met die faktor

$$\frac{1}{1-\frac{\text{algemene korting}}{100}}$$

indien 'n algemene korting op die tydstip geld;

(b) die netto bedrag ingevolge paragraaf (a) hiervan vasgestel, is onderworpe aan die algemene afslag of die algemene toeslag wat op daardie tydstip van toepassing is. Met ingang van 1 Junie 1980 is die algemene korting 8 persent.

Tarief (C): *Stedelike huishoudelike verbruikers*

Vir 'n elektrisiteitstoevoer vir huishoudelike doeleindes vir 'n private woning of 'n blok woonstelle, of vir 'n kerk, saal, ouetehuis of perseel van dergelike aard, binne 'n wettige dorp of binne 'n gebied wat deur die Lisensiehouer as soortgelyk aan 'n wettige dorp beskou word—

(a) is daar—

(i) 'n basiese vordering van R6 per maand ten opsigte van elke toevoerpunt, welke vordering betaalbaar is of elektrisiteit geneem word of nie;

(ii) 'n heffing vir 300 kWh van die maandelikse verbruik, of die maandelikse verbruik, watter getal ook al die laagste is, teen 'n tarief van 5,3c per kWh: Met dien verstande dat, vir 'n toevoer aan 'n blok woonstelle, hierdie heffing bereken word op die grondslag van 300 kWh of die gemiddelde maandelikse verbruik per wooneenheid;

(iii) 'n energieprys teen 'n tarief van 2,9c per kWh vir kWh geneem bo en behalwe die kWh in (ii) hierbo vermeld: Met dien verstande dat die kWh-tarief van 5,3c en 2,9c per kWh, gebaseer op die gemiddelde koste van steenkool by die kragstasies van die Sentrale Kragontwikkelingsonderneming verbruik, met uitsondering van die kragstasies in (B), (C) en (D) van die Tweede Bylae by die Permit van die Sentrale Kragontwikkelingsonderneming genoem, synde R8 per metrieke ton, van tyd tot tyd aangepas word op die wyse in paragraaf (a) (iii) van Tarief (B) uiteengesit;

(b) die netto bedrag ingevolge paragraaf (a) hiervan vasgestel, is onderworpe aan die algemene afslag of die algemene toeslag wat op daardie tydstip van toepassing is. Met ingang van 1 Julie 1980 is die algemene korting 8 persent.

Straatverligting

Waar die Lisensiehouer elektrisiteit voorsien vir straatverligting of soortgelyke openbare verligting en dit in stand hou, word die bedrag vir sodanige elektrisiteit en diens by 'n spesiale ooreenkoms tussen die Lisensiehouer en die verbruiker vasgestel.

Bogenoemde bedrae word, ooreenkomstig die bepalinge van artikel 29 van die Wet, verander om te voldoen aan spesiale omstandighede wat van toepassing is, op die voorsiening van elektrisiteit aan sekere verbruikers en in sekere gebiede.

ELECTRICITY SUPPLY COMMISSION • Statement of charges for 1980 [published in terms of section 29 (3) of the Electricity Act, 1958]:

BORDER UNDERTAKING

The standard tariffs are as set out hereunder. These tariffs are with effect from July 1980 subject to a surcharge of 7,5 per cent.

Tariff (A): *Large power users*

For a supply to a consumer whose notified maximum demand is 25 kilovolt amperes or over of three phase alternating current at a frequency of 50 hertz and an agreed voltage which is available in the vicinity, there shall be—

(a) a service charge of R20 per month, which charge shall be payable whether any electricity is taken or not;

(b) a demand charge for each kilovolt ampere of the maximum demand supplied in the month at the rate of—

(i) R8,80 when the supply is furnished at a nominal voltage above 380/220 volts; or

(ii) R9,05 when the supply is furnished at the nominal voltage of 380 volts between phases and 220 volts between phase and neutral;

(c) an energy charge at the rate of 0,74c per kilowatthour (kWh) supplied in the month: Provided that the said kWh rate having been based upon the cost of coal consumed at the power stations of the Central Generating Undertaking, excluding the power stations named in (B), (C) and (D) of the Second Schedule of the Permit of the Central Generating Undertaking, being R5 per metric ton, shall be adjusted from time to time in the following manner:

The cost of coal expressed as an average cost per metric ton of the coal consumed at the said power stations shall be ascertained for each three-monthly period to the end of March, June, September and December, and if the difference in the cost of coal for the three-monthly period immediately past and the said basic cost of R5 is less than 3,5c, the kWh rate to be applied in the succeeding three-montly period shall be the said rate of 0,74c; but if the said cost of coal differs from the basic cost by 3,5c or more, then the kWh rate to be applied in the succeeding three-monthly period shall be the said rate of 0,74c per kWh increased or decreased by 0,002c for each complete increase or decrease of 3,5c in the said cost of coal above or below the basic cost;

(d) the nett amount determined under paragraphs (a), (b) and (c) hereof shall be subject to the general discount or general surcharge ruling at the time.

Tariff (B): *Small power users*

For a supply to a consumer whose maximum demand rarely exceeds 75 kVA and at no time exceeds 100 kVA, made available at a nominal voltage of 380 volts between phases and 220 volts between phase and neutral, excepting supplies provided under Tariff (C), there shall be—

(a) a service charge for each point of supply of R8 per month, which charge shall be payable whether electricity is taken or not;

(b) in respect of each point of supply, a kWh charge for 500 kWh of the monthly consumption, or the monthly consumption, whichever is the lesser number, at the rate of 5,4c per kWh;

(c) an energy charge at the rate of 2,7c per kWh for kWh taken in excess of the kWh referred to in (b) above:

Provided that the kWh rates of 5,4c and 2,7c having been based upon the cost of coal consumed at the power stations of the Central Generating Undertaking, excluding the power stations named in (B), (C) and (D) of the Second Schedule of the Permit of the Central Generating Undertaking, being R5 per metric ton, shall be adjusted from time to time in the following manner:

The cost of coal expressed as an average cost per metric ton of the coal consumed at the said power stations shall be ascertained for each quarter to the end of March, June, September and December, and if the difference in the cost of coal for the quarter immediately past and the basic cost of R5 is less than 17,5c, the kWh rate to be applied in the succeeding quarter shall be the said rates of 5,4c and 2,7c; but if the said cost of coal differs from the basic cost by 17,5c or more, then the kWh rate to be applied in the succeeding quarter shall be the said rates of 5,4c and 2,7c; but if the said cost of coal differs from the basic cost by 17,5c or more, then the kWh rate to be applied in the succeeding quarter shall be the said rates of 5,4c and 2,7c per kWh each increased or decreased by 0,01c for each complete increase or decrease of 17,5c in the said cost of coal above or below the basic cost;

(d) the nett amount determined under paragraphs (a), (b) and (c) hereof shall be subject to the general discount or general surcharge ruling at the time.

Tariff (C): *Urban Domestic Consumers*

For a supply of electricity for domestic purposes for a private house or a block of flats, within a legally constituted township or within an area considered by the Licencee to be similar to a legally constituted township, there shall be—

(a) a service charge of R4 per month in respect of each point of supply;

(b) a charge for 300 kWh of the montly consumption, or the montly consumption, whichever is the lesser number, at the rate of 5,4c per kWh: Provided that, for a supply to a block of flats, this charge shall be calculated on 300 kWh or the average monthly consumption per dwelling unit;

(c) an energy charge at the rate of 2,7c per kWh for kWh taken in excess of the kWh referred to in (b) above: Provided that the kWh rates of 5,4c and 2,7c per kWh having been based upon the cost of coal consumed at the power stations of the Central Generating Undertaking, excluding the power stations named in (B), (C) and (D) of the Second Schedule of the Permit of the Central Generating Undertaking, being R5 per metric ton, shall be adjusted from time to time in the manner set out in paragraph (c) of Tariff (B);

(d) the nett amount determined under paragraphs (a), (b) and (c) hereot shall be subject to the general discount or general surcharge ruling at the time.

Street lighting

Where the Lincensee provides a supply for, and maintains, any street lighting or similar public lighting, the charge for such supply and service shall be fixed by special arrangements between the Licnesee and the consumer.

The above charges are varied in accordance with the provisions of section 29 of the Act to meet special circumstances applicable to the supply of electricity to certain consumers and in certain areas.

CAPE EASTERN UNDERTAKING

The standard tariffs are as set out hereunder. These tariffs are with effect from July 1980 subject to a surcharge of 55 per cent.

Tariff (A): *Large power users*

For a supply to a consumer whose notified maximum demand is 25 kilovolt amperes or over of three phase alternating current at a frequency of 50 hertz and an agreed voltage which is available in the vicinity, there shall be—

(a) a service charge of R20 per month, which charge shall be payable whether any electricity is taken or not;

(b) a demand charge for each kilovolt ampere of the maximum demand supplied in the month at the rate of—

(i) R4,40 when the supply is furnished at the nominal voltage above 380/220 volts; or

(ii) R4,65 when the supply is furnished at the nominal voltage of 380 volts between phases and 220 volts between phase and neutral;

(c) an energy charge at the rate of 0,67c per kilowatt hour (kWh) supplied in the month: Provided that the said kWh rate having been based upon the cost of coal consumed at the power stations of the Central Generating Undertaking, excluding the power stations named in (B), (C) and (D) of the Second Schedule of the Permit of the Central Generating Undertaking, being R5 per metric ton, shall be adjusted from time to time in the following manner:

The cost of coal expressed as an average cost per metric ton of the coal consumed at the said power stations shall be ascertained for each three-monthly period to the end of March, June, September and December, and if the difference in the cost of coal for the three-monthly period immediately past and the said basic cost of R5 is less than 3,5c, the kWh rate to be applied in the succeeding three-monthly period shall be the said rate of 0,67c; but if the said cost of coal differs from the basic cost by 3,5c or more, then the kWh rate to be applied in the succeeding three-monthly period shall be the said rate of 0,67c per kWh increased or decreased by 0,002c for each complete increase or decrease of 3,5c in the said cost of coal above or below the basic cost;

(d) the nett amount determined under paragraphs (a), (b) and (c) hereof shall be subject to the general discount or general surcharge ruling at the time.

Tariff (B): *Small power users*

For a supply to a consumer whose maximum demand rarely exceeds 75 kVA and at no time exceeds 100 kVA, made available at a nominal voltage of 380 volts between phases and 220 volts between phase and neutral, excepting supplies provided under Tariff (C), there shall be—

(a) a service charge for each point of supply of R8 per month, which charge shall be payable whether electricity is taken or not;

(b) in respect of each point of supply, a kWh charge for 500 kWh of the monthly consumption, or the monthly consumption, whichever is the lesser number, at the rate of 5,4c per kWh;

(c) an energy charge at the rate of 2,7c kWh for kWh taken in excess of the kWh referred to in (b) above

(b) in respect of each point of supply, a kWh charge for 500 kWh of the monthly consumption, or the monthly consumption, whichever is the lesser number, at the rate of 5,4c per kWh;

(c) an energy charge at the rate of 2,7c per kWh for kWh taken in excess of the kWh referred to in (b) above:

Provided that the kWh rates of 5,4c and 2,7c having been based upon the cost of coal consumed at the power stations of the Central Generating Undertaking, excluding the power stations named in (B), (C) and (D) of the Second Schedule of the Permit of the Central Generating Undertaking, being R5 per metric ton, shall be adjusted from time to time in the following manner:

The cost of coal expressed as an average cost per metric ton of the coal consumed at the said power stations shall be ascertained for each quarter to the end of March, June, September and December, and if the difference in the cost of coal for the quarter immediately past and the basic cost of R5 is less than 17,5c, the kWh rate to be applied in the succeeding quarter shall be the said rates of 5,4c and 2,7c; but if the said cost of coal differs from the basic cost by 17,5c or more, then the kWh rate to be applied in the succeeding quarter shall be the said rates of 5.4c and 2.7c per kWh each increased or decreased by 0,01c for each complete increase or decrease of 17,5c in the said cost of coal above or below the basic cost;

(d) the nett amount determined under paragraphs (a), (b) and (c) hereof shall be subject to the general discount or general surcharge ruling at the time.

Tariff (C): *Urban domestic consumers*

For a supply of electricity for domestic purposes for a private house or a block of flats, within a legally constituted township or within an area considered by the Licensee to be similar to a legally constituted township, there shall be—

(a) a service charge of R4 per month in respect of each point of supply;

(b) a charge for 300 kWh of the monthly consumption, or the monthly consumption, whichever is the lesser number, at the rate of 5.4c per kWh: Provided that, for a supply to a block of flats, this charge shall be calculated on 300 kWh or the average monthly consumption per dwelling unit;

(c) an energy charge at the rate of 2.7c per kWh for kWh taken in excess of the kWh referred to in (b) above:

Provided that the kWh rates of 5.4c and 2,7c per kWh having been based upon the cost of coal consumed at the power stations of the Central Generating Undertaking,

excluding the power stations named in (B), (C) and (D) of the Second Schedule of the Permit of the Central Generating Undertaking, being R5 per metric ton, shall be adjusted from time to time in the manner set out in paragraph (c) of Tariff (B):

(d) the nett amount determined under paragraphs (a), (b) and (c) hereof shall be subject to the general discount or general surcharge ruling at the time.

Street lighting

Where the Licensee provides a supply for, and maintains, any street lighting or similar public lighting, the charge for such supply and service shall be by special arrangement between the Licensee and the consumer.

The above charges are varied in accordance with the provisions of section 29 of the Act to meet special circumstances applicable to the supply of electricity to certain consumers and in certain areas.

CAPE NORTHERN UNDERTAKING

The standard tariffs are as set out hereunder. These tariffs are with effect from July 1980 subject to a surcharge of 125 per cent.

Tariff (A): *Large power users*

For a supply to consumers whose notified maximum demand is 25 kilovolt amperes or over, of three-phase alternating current at a frequency of 50 hertz and a nominal voltage of 11 000 volts between phases, there shall be—

(a) a service charge of R7,30 per month; plus

(b) a demand charge at the rate of R2,30 for each kilovolt ampere of the maximum demand supplied in the month; plus

(c) an energy charge at the rate of 0,275c per kilowatt hour (kWh) supplied in the month: Provided that the said kWh rate having been based upon the cost of coal consumed at the power stations of the Central Generating Undertaking, excluding the power stations named in (B) and (C) of the Second Schedule of the Permit of the Central Generating Undertaking, being R1,75 per metric ton shall be adjusted from time to time in the following manner:

The cost of coal expressed as an average cost per metric ton of the coal consumed at the said power stations shall be ascertained for each three-monthly period to the end of March, June, September and December, and if the difference in the cost of coal for the three-monthly period immediately past and the said basic cost of R1,75 is less than 3,5 cents, the kWh rate to be applied in the succeeding three-monthly period shall be the said rate of 0,275c; but if the said cost of coal differs from the basic cost by 3,5 cents or more, then the kWh rate to be applied in the succeeding three-monthly period shall be the said rate of 0,275c per kWh increased or decreased by 0,002c for each complete increase or decrease of 3,5c in the said cost of coal above or below the basic cost.

Tariff (B): Small power users

For a supply, the maximum demand rarely exceeding 50 kVA and at no time exceeding 75 kVA, made available at a nominal voltage of 380 volts between phases and 220 volts between phase and neutral, for use as motive power or for heating or for electro-chemical processes, there shall be—

(a) a service charge of R1,25 per month, which charge shall be payable whether electricity is taken or not; plus

(b) a demand charge at the rate of 30c for each complete ampere of the maximum demand supplied in the month: Provided however, that the consumer shall pay not less than the minimum charge for the metering installation installed at the time for his supply, that is—

Metering installation to measure a maximum demand of	*Minimum charge*
	R
Less than 17 amperes	0,90
From 17 to 24 amperes	1,20
From 25 to 33 amperes	1,80
From 34 to 49 amperes	2,70
From 50 to 66 amperes	3,60
From 67 to 99 amperes	5,40
From 100 to 132 amperes	7,20
From 133 to 198 amperes	10,80
From 199 to 297 amperes	16,20
Over 297 amperes	21,60;

plus

(c) an energy charge at the rate of 0,83c per kilowatt hour supplied in the month: Provided that the said kWh rate having been based upon the cost of coal consumed at the power stations of the Central Generating Undertaking, excluding the power stations named in (B) and (C) of the Second Schedule of the Permit of the Central Generating Undertaking, being R1,75 per metric ton, shall be adjusted from time to time in the following manner:

The cost of coal expressed as an average cost per metric ton of the coal consumed at the said power stations shall be ascertained for each three-monthly period to the end of March, June, September and December, and if the difference in the cost of coal for the three-monthly period immediately past and the said basic cost of R1,75 is less than 17,5c, the kWh rate to be applied in the succeeding three-monthly period shall be the said rate of 0,83c, but if the said cost of coal differs from the basic cost by 17,5c or more, than the kWh rate to be appleid in the succeeding three-monthly period shall be the said rate of 0,83c per kWh increased or decreased by 0,01c for each complete increase or decrease of 17,5c in the said cost of coal above or below the basic cost:

Provided that, where a consumer is supplied under this tariff, any supply taken by the consumer on the premises for lighting and other purposes referred to in Tariff (C) of this Schedule may be included in the supply under this tariff.

Tariff (C): *Domestic users*

For a supply to private residences, and other premises in respect of which a "room" assessment has been or maybe made:

Alternative (i).—*Flat rate tariff:*

(a) A service charge of 55c per month, which charge shall be payable whether electricity is taken or not; plus

(b) a charge of 10c per kWh supplied in the month, subject to a minimum payment of 85c per month whether electricity is taken or not.

Alternative (ii).—*Room rate tariff*

(a) A service charge of 55c per month, which charge shall be payable whether electricity is taken or not; plus

(b) a charge of 42½c per room per month, which charge or 85c per month, whichever is the greater shall be payable whether electricity is taken or not; plus

(c) an energy charge at the rate of 0,83c per kWh supplied in the month: Provided that the said kWh rate having been based upon the cost of coal consumed at the power stations of the Central Generating Undertaking, excluding the power stations named in (B) and (C) of the Second Schedule of the Permit of the Central Generating Undertaking, being R1,75 per metric ton, shall be adjusted from time to time in the manner set out in the paragraph (c) of Tariff (B):

Provided that, if the commencing or the terminating date of any supply be such that the supply is available for a portion only of a month, the charges payable under paragraphs (a) and (b) of Tariff (A), (a) and (b) of Tariff (B) and (a) of Alternative (i) of Tariff (C) and (a) and (b) of Alternative (ii) of Tariff (C) and minimum payments set out in the Tariffs shall be calculated on a pro rata basis for the portion of a month of 30 days during which the supply is available.

Street lighting

Where the Licensee provides a supply for, and maintains, any street lighting or similar public lighting, the charge for such supply and service shall be fixed by special arrangement between the Licensee and the consumer.

The above charges are varied in accordance with the provisions of section 29 of the Act to meet special circumstances applicable to the supply of electricity to certain consumers.

CAPE WESTERN UNDERTAKING

The standard tariffs are as set out hereunder. These tariffs are with effect from July 1980 subject to a surcharge of 12,5 per cent.

Tariff (A): *Large power users*

For a supply to a consumer whose notified maximum demand is 25 kilovolt amperes or over of three phase alternating current at a frequency of 50 hertz and an agreed voltage which is available in the vicinity, there shall be—

(a) a service charge of R20 per month, which charge shall be payable whether any electricity is taken or not;

(b) a demand charge for each kilovolt ampere of the maximum demand supplied in the month at the rate of—

(i) R5,60 when the supply is furnished at a nominal voltage above 380/220 volts; or

(ii) R5,80 when the supply is furnished at the nominal voltage of 380 volts between phases and 220 volts between phase and neutral;

(c) an energy charge at the rate of 0,74c per kilowatt-hour (kWh) supplied in the month: Provided that the said kWh rate having been based upon the cost of coal consumed at the power stations of the Central Generating Undertaking, excluding the power stations named in (B), (C) and (D) of the Second Schedule of the Permit of the Central Generating Undertaking, being R5 per metric ton, shall be adjusted from time to time in the following manner:

The cost of coal expressed as an average cost per metric ton of the coal consumed at the said power stations shall be ascertained for each three-monthly period to the end of March, June, September and December, and if the difference in the cost of coal for the three-monthly period immediately past and the said basic cost of R5 is less than 3,5c the kWh rate to be applied in the succeeding three-monthly period shall be the said rate of 0,74c but if the said cost of coal differs from the basic cost by 3,5c or more, then the kWh rate to be applied in the succeeding three-monthly period shall be the said rate of 0,74c per kWh increased or decreased by 0,002c for each complete increase or decrease of 3,5c in the said cost of coal above or below the basic cost;

(d) the nett amount determined under paragraphs (a), (b) and (c) hereof shall be subject to the general discount or general surcharge ruling at the time.

Tariff (B): *Small power users*

For a supply to a consumer whose maximum demand rarely exceeds 75 kVA and at no time exceeds 100 kVA, made available at a nominal voltage of 380 volts between phases and 220 volts between phase and neutral, excepting supplies provided under Tariff (C), there shall be—

(a) a service charge for each point of supply of R8 per month, which charge shall be payable whether electricity is taken or not;

(b) in respect of each point of supply, a kWh charge for 500 kWh of the monthly consumption, or the monthly consumption, whichever is the lesser number, at the rate of 5,4c per kWh;

(c) an energy charge at the rate of 2,7c per kWh for kWh taken in excess of the kWh referred to in (b) above: Provided that the kWh rates of 5,4c and 2,7c having been based upon the cost of coal consumed at the power stations of the Central Generating Undertaking, excluding the power stations named in (B), (C) and (D) of the Second Schedule of the Permit of the Central Generating Undertaking, being R5 per metric ton, shall be adjusted from time to time in the following manner:

The cost of coal expressed as an average cost per metric ton of the coal consumed at the said power stations shall be ascertained for each quarter to the end of March, June, September and December, and if the difference in the cost of coal for the quarter immediately past and the basic cost of R5 is less than 17,5c the kWh rate to be applied in the succeeding quarter shall be the said rates of 5,4c and 2,7c but if the said cost of coal differs from the basic cost by 17,5c or more, then the kWh rate to be applied in the succeeding quarter shall be the said rates of 5,4c and 2,7c per kWh each increased or decreased by 0,01c for each complete increase or decrease of 17,5c in the said cost of coal above or below the basic cost;

(d) the nett amount determined under paragraphs (a), (b) and (c) hereof shall be subject to the general discount or general surcharge ruling at the time.

Tariff (C): *Urban domestic consumers*

For a supply of electricity for domestic purposes for a private house or a block of flats, within a legally constituted township or within an area considered by the Licensee to be similar to a legally constituted township, there shall be—

(a) a service charge of R2,65 per month in respect of each point of supply;

(b) a charge for 300 kWh of the monthly consumption, or the monthly consumption, whichever is the lesser number, at the rate of 4,65c per kWh: Provided that, for a supply to a block of flats, this charge shall be calculated on 300 kWh or the average monthly consumption per dwelling unit;

(c) an energy charge at the rate of 2,7c per kWh for kWh taken in excess of the kWh referred to in (b) above: Provided that the kWh rates of 4,65c and 2,7c per kWh having been based upon the cost of coal consumed at the power stations of the Central Generating Undertaking, excluding the power stations named in (B), (C) and (D) of the Second Schedule of the Permit of the Central Generating Undertaking, being R5 per metric ton, shall be adjusted from time to time in the manner set out in paragraph (c) of Tariff (B);

(d) the nett amount determined under paragraphs (a), (b) and (c) hereof shall be subject to the general discount or general surcharge ruling at the time.

Street lighting

Where the Licensee provides a supply for and maintains, any street lighting or similar public lighting, the charge for such supply and service shall be fixed by special arrangement between the Licensee and the consumer

The above charges are varied in accordance with the provisions of section 29 of the Act to meet special circumstances applicable to the supply of electricity to certain consumers.

ORANGE RIVER UNDERTAKING

The standard tariffs are as set out hereunder. These tariffs are with effect from July 1980 subject to a surcharge of 55,0 per cent.

Tariff (A): *Large power users*

For a supply to a consumer whose notified maximum demand is 25 kilovolt amperes or over of three phase alternating current at a frequency of 50 hertz and an agreed voltage which is available in the vicinity, there shall be—

(a) a service charge of R20 per month, which charge shall be payable whether any electricity is taken or not;

(b) a demand charge for each kilovolt ampere of the maximum demand supplied in the month at the rate of—

(i) R4,40 when the supply is furnished at the nominal voltage above 380/220 volts; or

(ii) R4,65 when the supply is furnished at the nominal voltage of 380 volts between phases and 220 volts between phase and netrual;

(c) an energy charge at the rate of 0,67c per kilowatt-hour (kWh) supplied in the month: Provided that the said kWh rate having been based upon the cost of coal consumed at the power stations of the Central Generating Undertaking, excluding the power stations named in (B), (C) and (D) of the Second Schedule of the Permit of the Central Generating Undertaking, being R5 per metric ton, shall be adjusted from time to time in the following manner:

The cost of coal expressed as an average cost per metric ton of the coal consumed at the said power stations shall be ascertained for each three-monthly period to the end of March, June, September and December, and if the difference in the cost of coal for the three-monthly period immediately past and the said basic cost of R5 is less than 3,5c, the kWh rate to be applied in the succeeding three-monthly period shall be the said rate of 0,67c; but if the said cost of coal differs from the basic cost by 3,5c or more, then the kWh rate to be applied in the succeeding three-monthly period shall be the said rate of 0,67c per kWh increased or decreased by 0,002c for each complete increase or decrease of 3,5c in the said cost of coal above or below the basic cost;

(d) the nett amount determined under paragraphs (a), (b) and (c) hereof shall be subject to the general discount or general surcharge ruling at the time.

Tariff (B): *Small power users*

For a supply to a consumer whose maximum demand rarely exceeds 75 kVA and at no time exceeds 100 kVA, made available at a nominal voltage of 380 volts between phases and 220 volts between phase and neutral, excepting supplies provided under Tariff (C), there shall be—

(a) a service charge for each point of supply of R8 per month, which charge shall be payable whether electricity is taken or not;

(b) in respect of each point of supply, a kWh charge for 500 kWh of the monthly consumption, or the monthly consumption, whichever is the lesser number, at the rate of 5,4c per kWh;

(c) an energy charge at the rate of 2,7c per kWh for kWh taken in excess of the kWh referred to in (b) above: Provided that the kWh rates of 5,4c and 2,7c having been based upon the cost of coal consumed at the power stations

of the Central Generating Undertaking, excluding the power stations named in (B), (C) and (D) of the Second Schedule of the Permit of the Central Generating Undertaking, being R5 per metric ton, shall be adjusted from time to time in the following manner:

The cost of coal expressed as an average cost per metric ton of the coal consumed at the said power stations shall be ascertained for each quarter to the end of March, June, September and December, and if the difference in the cost of coal for the quarter immediately past and the basic cost of R5 is less than 17,5c, the kWh rate to be applied in the succeeding quarter shall be the said rates of 5,4c and 2,7c; but if the said cost of coal differs from the basic cost by 17,5c or more, then the kWh rate to be applied in the succeeding quarter shall be the said rates of 5,4c and 2,7c per kWh each increased or decreased by 0,01c for each complete increase or decrease of 17,5c in the said cost of coal above or below the basic cost;

(d) the nett amount determined under paragraphs (a), (b) and (c) hereof shall be subject to the general discount or general surcharge ruling at the time.

Tariff (C): *Urban domestic consumers*

For a supply of electricity for domestic purposes for a private house or a block of flats, within a legally constituted township or within an area considered by the Licensee to be similar to a legally constituted township, there shall be—

(a) a service charge of R4 per month in respect of each point of supply;

(b) a charge for 300 kWh of the monthly consumption, or the monthly consumption, whichever is the lesser number, at the rate of 5,4c per kWh: Provided that, for a supply to a block of flats, this charge shall be calculated on 300 kWh or the average monthly consumption per dwelling unit;

(c) an energy charge at the rate of 2,7c per kWh for kWh taken in excess of the kWh referred to in (b) above:

Provided that the kWh rates of 5,4c and 2,7c per kWh having been based upon the cost of coal consumed at the power stations of the Central Generating Undertaking, excluding the power stations named in (B), (C) and (D) of the Second Schedule of the Permit of the Central Generating Undertaking, being R5 per metric ton, shall be adjusted from time to time in the manner set out in paragraph (c) of Tariff (B);

(d) the nett amount determined under paragraphs (a), (b) and (c) hereof shall be subject to the general discount or general surcharge ruling at the time

Street lighting

Where the Licensee provides a supply for, and maintains, any street lighting or similar public lighting, the charge for such supply and service shall be by special arrangement between the Licensee and the consumer.

The above charges are varied in accordance with the provisions of section 29 of the Act to meet special circumstances applicable to the supply of electricity to certain consumers.

NATAL UNDERTAKING

The standard tariffs are as set out hereunder. These tariffs are with effect from July 1980 subject to neither surcharge nor a discount.

Tariff (A): *Large power users*

For a supply to a consumer whose notified maximum demand is 25 kilovolt amperes or over of three phase alternating current at a frequency of 50 hertz and an agreed voltage which is available in the vicinity, there shall be—

(a) a service charge of R20 per month, which charge shall be payable whether any electricity is taken or not;

(b) a demand charge for each kilovolt ampere of the maximum demand supplied in the month at the rate of—

(i) R5,25 when the supply is furnished at the nominal voltage of 132 000 volts between phases; or

(ii) R5,50 when the supply is furnished at the nominal voltage between phases below 132 000 volts and above 380 volts; or

(iii) R5,65 when the supply is furnished at the nominal voltage of 380 volts between phases or 220 volts between phase and neutral;

(c) an energy charge at the rate of 0,67c per kilowatt-hour (kWh) supplied in the month: Provided that the said kWh rate having been based upon the cost of coal consumed at the power stations of the Central Generating Undertaking, excluding the power stations named in (B), (C) and (D) of the Second Schedule of the Permit of the Central Generating Undertaking, being R5 per metric ton, shall be adjusted from time to time in the following manner:

The cost of coal expressed as an average cost per metric ton of the coal consumed at the said power stations shall be ascertained for each three-monthly period to the end of March, June, September and December, and if the difference in the cost of coal for the three-monthly period immediately past and the said basic cost of R5 is less than 3,5c, the kWh rate to be applied in the succeeding three-monthly period shall be the said rate of 0,67c; but if the said cost of coal differs from the basic cost by 3,5c or more, then the kWh rate to be applied in the succeeding three-monthly period shall be the said rate of 0,67c per kWh increased or decreased by 0,002c for each complete increase or decrease of 3,5c in the said cost of coal above or below the basic cost;

(d) the nett amount determined under paragraphs (a), (b) and (c) hereof shall be subject to the general discount or general surcharge ruling at the time.

Tariff (B): *Small power users*

For a supply to a consumer whose maximum demand rarely exceeds 75 kVA and at no time exceeds 100 kVA, made available at a nominal voltage of 380 volts between phases and 220 volts between phase and neutral, excepting supplies provided under Tariff (C), there shall be—

(a) a service charge for each point of supply of R8 per month, which charge shall be payable whether electricity is taken or not;

(b) in respect of each point of supply, a kWh charge for 500 kWh of the monthly consumption, or the monthly consumption, whichever is the lesser number, at the rate of 4,3c per kWh;

(c) an energy charge at the rate of 2,15c per kWh for kWh taken in excess of the kWh referred to in (b) above:

Provided that the kWh rates of 4,3c and 2,15c having been based upon the cost of coal consumed at the power stations of the Central Generating Undertaking, excluding the power stations named in (B), (C) and (D) of the Second Schedule of the Permit of the Central Generating Undertaking, being R5 per metric ton, shall be adjusted from time to time in the following manner:

The cost of coal expressed as an average cost per metric ton of the coal cunsumed at the said power stations shall be ascertained for each quarter to the end of March, June, September and December, and if the difference in the cost of coal for the quarter immediately past and the basic cost of R5 is less than 17,5c, the kWh rate to be applied in the succeeding quarter shall be the said rates of 4,3c and 2,15c but if the said cost of coal differs from the basic cost by 17,5c or more, then the kWh rate to be applied in the succeeding quarter shall be the said rates of 4,3c and 2,15c per kWh each increased or decreased by 0,01c for each complete increase or decrease of 17,5c in the said cost of coal above or below the basic cost;

(d) the nett amount determined under paragraphs (a), (b) and (c) hereof shall be subject to the general discount or general surcharge ruling at the time.

Tariff (C): *Urban domestic consumers*

For a supply of electricity for domestic purposes for a private house or a block of flats, within a legally constituted township or within an area considered by the Licensee to be similar to a legally constituted township, there shall be—

(a) a service charge of R4 per month in respect of each point of supply;

(b) a charge for 300 kWh of the monthly consumption, or the monthly consumption whichever is the lesser number, at the rate of 4,3c per kWh: Provided that, for a supply to a block of flats, this charge shall be calculated on 300 kWh or the average monthly consumption per dwelling unit;

(c) an energy charge at the rate of 2,15c per kWh for kWh taken in excess of the kWh referred to in (b) above: Provided that the kWh rates of 4,3c and 2,15c per kWh having been based upon the cost of coal consumed at the power stations of the Central Generating Undertaking, excluding the power stations named in (B), (C) and (D) of the Second Schedule of the Permit of the Central Generating Undertaking, being R5 per metric ton, shall be adjusted from time to time in the manner set out in paragraph (c) of Tariff (B);

(d) the nett amount determined under paragraphs (a), (b) and (c) hereof shall be subject to the general discount or general surcharge ruling at the time.

Street lighting

Where the Licensee provides a supply for, and maintains, any street lighting or similar public lighting, the charge for such supply and service shall be fixed by special arrangement between the Licensee and the consumer.

The above charges are varied in accordance with the provisions of section 29 of the Act to meet special circumstances applicable to the supply of electricity to certain consumers.

EASTERN TRANSVAAL UNDERTAKING

The standard tariffs are as set out hereunder. These tariffs are with effect from July 1980 subject to a discount of 10 per cent.

Tariff (A): *Large power users*

For electricity supplied or made available under a single contract to a consumer whose notified maximum demand is 25 kilovolt amperes or over, of three-phase alternating current at a frequency of 50 hertz and at an agreed voltage which is available in the vicinity, provided that—

(i) separate contracts shall be entered into for each separate mine or works or installation of the consumer;

(ii) agreement to furnish the supply at more than one point of supply or at more than one voltage at the point of supply shall be in each case in the discretion of the Licensee.

The tariff shall comprise—

(a) a basic charge of R25 per month, which charge shall be payable whether any electricity is taken or not;

(b) a demand charge for each kilovolt ampere of the maximum simultaneous demand supplied in the month at all the points of supply agreed to under the contract at the rate of—

(i) R5,75 when the supply is furnished at a nominal voltage above 380/220 volts; or

(ii) R5,90 when the supply is furnished at the nominal voltage of 380 volts between phases and 220 volts between phase and neutral;

(c) a kWh charge at the rate of 0,95c per kWh supplied in the month: Provided that the said kWh rate having been based upon the average cost of coal consumed at the power stations of the Central Generating Undertaking, excluding the power stations named in (B), (C) and (D) of the Second Schedule of the Permit of the Central Generating Undertaking, being R8 per metric ton, shall be adjusted from time to time in the following manner:

The cost of coal expressed as an average cost per metric ton of the coal consumed at the said power stations shall be ascertained for each three-monthly period to the end of March, June, September and December, and if the difference in the average cost of coal for the three-monthly period immediately past and the said basic cost of R8 is less than 3,5c, the kWh rate to be applied in the succeeding three-monthly period shall be the said rate of 0,95c; but if the said average cost of coal differs from the basic cost by 3,5c or more, then the kWh rate to be applied in the succeeding three-monthly period shall be the said rate of 0,95c per kWh increased or decreased by 0,002c for each complete increase or decrease of 3,5c in the said cost of coal above or below the basic cost.

To take into account the effect of the general discount or general surcharge ruling in the area covered by this Licence, the increase or decrease calculated above shall be further adjusted by multiplying by the factor

$$\frac{1}{\frac{1+\text{General Surcharge}}{100}}$$

if a general surcharge is in force or by the factor

$$\frac{1}{\frac{1-\text{General Discount}}{100}}$$

if a general discount is ruling at the time;

(d) in respect of each supply of electricity which is furnished at more than one point of supply to the consumer, there shall be an additional charge calculated on the difference between the sum of the non-simultaneous maximum demands taken in the month at each point of supply and the maximum simultaneous demand referred to in paragraph (b) hereof at the rate of R1 per month per kilovolt ampere;

(e) the sum of the net amount determined under paragraphs (a), (b), (c) and (d) hereof shall be subject to the general discount or general surcharge ruling at the time.

Tariff (B): *Small power users*

For a supply to a consumer whose maximum demand at no time exceeds 100 kVA, made available at a nominal voltage of 380 volts between phases and 220 volts between phase and neutral, excepting supplies provided under Tariff (C), there shall be—

(a) a basic charge for each point of supply of R10 per month, which charge shall be payable whether electricity is taken or not;

(b) in respect of each point of supply, a kWh charge for 500 kWh of the monthly consumption, or the monthly consumption, whichever is the lesser number, at the rate of 4,9c per kWh;

(c) a kWh charge at the rate of 2,9c per kWh for kWh taken in excess of the kWh referred to in (b) above: Provided that the kWh rates of 4,9c and 2,9c per kWh, having been based upon the average cost of coal consumed at the power stations of the Central Generating Undertaking, excluding the power stations named in (B), (C) and (D) of the Second Schedule of the Permit of the Central Generating Undertaking, being R8 per metric ton, shall be adjusted from time to time in the following manner:

The cost of coal expressed as an average cost per metric ton of the coal consumed at the said power stations shall be ascertained for each quarter to the end of March, June, September and December, and if the difference in the average cost of coal for the quarter immediately past and the basic cost of R8 is less than 17,5c, the kWh rates to be applied in the succeeding quarter shall be the said rates of 4,9c and 2,9c; but if the said cost of coal differs from the basic cost by 17,5c or more, then the kWh rate to be applied in the succeeding quarter shall be the said rates of 4,9c and 2,9c per kWh increased or decreased by 0,01c for each complete increase or decrease of 17,5c in the said cost of coal above or below the basic cost.

To take into account the effect of the general discount or general surcharge ruling in the area covered by this Licence, the increase or decrease calculated above shall be further adjusted by multiplying by the factor

$$\frac{1}{\frac{1+\text{General Surcharge}}{100}}$$

if a general surcharge is in force or by the factor

$$\frac{1}{\frac{1-\text{General Discount}}{100}}$$

if a general discount is ruling at the time;

(d) the sum of the net amount determined under paragraphs (a), (b) and (c) hereof shall be subject to the general discount or general surcharge ruling at the time.

Tariff (C): *Urban domestic consumers*

For a supply of electricity for domestic purposes for a private house or a block of flats, or for a church, hall, old age home or the like premises, within a legally constituted township or within an area considered by the Licensee to be similar to a legally constituted township, there shall be—

(a) a basic charge of R5 per month in respect of each point of supply;

(b) a charge for 300 kWh of the monthly consumption, or the monthly consumption, whichever is the lesser number, at the rate of 4,9c per kWh: Provided that, for a supply to a block of flats, this charge shall be calculated on 300 kWh or the average monthly consumption per dwelling unit;

(c) a kWh charge at the rate of 2,9c per kWh for kWh taken in excess of the kWh referred to in (b) above: Provided that the kWh rates of 4,9c and 2,9c per kWh, having been based upon the average cost of coal consumed at the power stations of the Central Generating Undertaking, excluding the power stations named in (B), (C) and (D) of the Second Schedule of the Permit of the Central

Generating Undertaking, being R8 per metric ton, shall be adjusted from time to time in the manner set out in paragraph (c) of Tariff (B):

(d) the sum of the net amount determined under paragraphs (a), (b) and (c) hereof shall be subject to the general discount or general surcharge ruling at the time.

Street lighting

Where the Licensee provides a supply for, and maintains, any street lighting or similar public lighting, the charge for such supply and service shall be fixed by special arrangement between the Licensee and the consumer.

The above charges are varied in accordance with the provisions of section 29 of the Act to meet special circumstances applicable to the supply of electricity to certain consumers.

RAND AND ORANGE FREE STATE UNDERTAKING

Tariff (A): *Large power users*

For electricity supplied or made available under a single contract to a consumer whose notified maximum demand is 25 kilowatts or over, of three-phase alternating current at a frequency of 50 hertz and at an agreed voltage which is available in the vicinity, provided that—

(i) separate contracts shall be entered into for each separate mine or works or installation of the consumer;

(ii) agreement to furnish the supply at more than one point of supply or at more than one voltage at the point of supply shall be in each case in the discretion of the Licensee.

(a) The tariff shall comprise—

(i) a basic charge of R25 per month, which charge shall be payable whether any electricity is taken or not;

(ii) a demand charge at the rate of R7 per month per kilowatt of the maximum simultaneous demand supplied in the month at all the points of supply agreed to under the contract;

(iii) an energy charge at the rate of 1,05c per kWh of electricity supplied in the month:

Provided that the said kWh rate, having been based upon the average cost of coal consumed at the power stations of the Central Generating Undertaking, excluding the power stations named in (B), (C) and (D) of the Second Schedule of the Permit of the Central Generating Undertaking, being R8 per metric ton, shall be adjusted from time to time in the following manner:

The cost of coal expressed as an average cost per metric ton of the coal consumed at the said power stations shall be ascertained for each quarter to the end of March, June, September and December, and if the difference in the average cost of coal for the quarter immediately past and the basic cost of R8 is less than 3,5c the kWh rate to be applied in the succeeding quarter shall be the said rate of 1,05c per kWh increased or decreased by 0,0022c for each complete increase or decrease of 3,5 in the said cost of coal above or below the basic cost

To take into account the effect of the general discount or general surcharge ruling in the area covered by the Rand licence, the increase or decrease calculated above shall be further adjusted by multiplying by the factor

$$\frac{1}{1 + \frac{\text{General Surcharge}}{100}}$$

if a general surcharge is in force or by the factor

$$\frac{1}{1 - \frac{\text{General Discount}}{100}}$$

if a general discount is ruling at the time.

(b) The aggregate for the month of the service charge, the demand charge and the energy charge aforesaid shall be subject to a discount of 10 per cent of the amount, if any, by which the said aggregate exceeds R1 500.

(c) In respect of each supply of electricity which is furnished at more than one point of supply to the consumer, there shall be an additional charge calculated on the difference between the sum of the non-simultaneous maximum demand taken in the month at each point of supply and the maximum simultaneous demand referred to in paragraph (a) (ii) hereof at the rate of R1,10 per month per kilowatt.

(d) The sum of the net amount determined under paragraph (b) and the additional charge under paragraph (c) hereof shall be subject to the general discount or general surcharge ruling at the time. With effect from July 1980 there is a general discount of 8 per cent in the Established Area and a general surcharge of 5 per cent in the Extension Areas.

(e) The standard prices to be charged by the Licensee shall be those stated herein, subject however to the proviso that in fixing the terms of supply to consumers regard shall be had to the proviso to section 29 (1) and to subsection (3) of section 30 of the Act or any re-enactment or amendment thereof.

In all cases in which the said proviso or the said subsection are to be applied to a consumer supplied under this tariff by reason of the fact that the cost of extensions of transmission and/or distribution systems necessary for conveying and delivering power to consumers will be abnormally high relative to the amount of power initially required by such consumers the terms of supply to the said consumers shall be determined on the condition that the minimum revenue to be paid to the Licensee by the said consumers shall be such as to cover—

(i) the capital charges on the capital expenditure incurred in extending the transmission and/or distribution systems for conveying or delivering electricity to the said consumers and an allowance sufficient in the opinion of the Licensee to cover the additional costs incurred by it in operating and maintaining such extensions; and

(ii) a charge for the electricity supplied to the said consumers calculated monthly at the rate of 1,31c per kWh plus the adjustment (if any) applicable in the month in respect of the variation in the cost of coal determined in accordance with subclause (a) (iii) of this tariff.

The charge under (e) (ii) shall be subject to the general discount or general surcharge ruling at the time.

Tariff (B): *Small power users*

For a supply of electricity, the monthly maximum demand not exceeding 100 kW, made available at a nominal voltage of 380 volts between phases and 220 volts between phase and neutral, or as otherwise agreed, excepting supplies provided under Tariff (C).

(a) There shall be—

(i) a basic charge for each point of supply of R12 per month, which charge shall be payable, whether any electricity is taken or not;

(ii) in respect of each point of supply, a kWh charge for 500 kWh of the monthly consumption or the monthly consumption, whichever is the lesser number, at the rate of 5,3c per kWh;

(iii) an energy charge at the rate of 2,9c per kWh for kWh taken in excess of the kWh referred to in (ii) above:

Provided that the kWh rates of 5,3c and 2,9c per kWh, having been based upon the average cost of coal consumed at the power stations of the Central Generating Undertaking, excluding the power stations named in (B), (C) and (D) of the Second Schedule of the Permit of the Central Generating Undertaking, being R8 per metric ton, shall be adjusted from time to time in the following manner:

The cost of coal expressed as an average cost per metric ton of the coal consumed at the said power stations shall be ascertained for each quarter to the end of March, June, September and December, and if the difference in the said cost of coal for the quarter immediately past and the basic cost of R8 is less than 17,5c, the kWh rate to be applied in the succeeding quarter shall be the said rates of 5,3c and 2,9c; but if the said cost of coal differs from the basic cost by 17,5c or more, then the kWh rate to be applied in the succeeding quarter shall be the said rates of 5,3c and 2,9c per kWh increased or decreased by 0,01c for each complete increase or decrease of 17,5c in the said cost of coal above or below the basic cost.

To take into account the effect of the general discount or general surcharge ruling in the area covered by the Rand licence, the increase or decrease calculated above shall be further adjusted by multiplying by the factor

$$\frac{1}{1 + \frac{\text{General Surcharge}}{100}}$$

if a general surcharge is in force or by the factor

$$\frac{1}{1 - \frac{\text{General Discount}}{100}}$$

if a general discount is ruling at the time.

(b) The sum of the net amount determined under paragraph (a) hereof shall be subject to the general discount or general surcharge ruling at the time. With effect from July 1980 the general discount is 8 per cent.

Tariff (C): Urban domestic consumers

For a supply of electricity for domestic purposes for a private house or a block of flats, or for a church, hall, old age home or the like premises, within a legally constituted township or within an area considered by the Licensee to be similar to a legally constituted township—

(a) there shall be—

(i) a basic charge of R6 per month in respect of each point of supply, which charge shall be payable whether any electricity is taken or not;

(ii) a charge for 300 kWh of the monthly consumption, or the monthly consumption, whichever is the lower number, at the rate of 5,3c per kWh: Provided that for a supply to a block of flats, this charge shall be calculated on 300 kWh or the average monthly consumption per dwelling unit;

(iii) an energy charge at the rate of 2,9c per kWh for kWh taken in excess of the kWh referred to in (ii) above:

Provided that the kWh rates of 5,3c and 2,9c per kWh, having been based upon the average cost of coal consumed at the power stations of the Central Generating Undertaking, excluding the power stations named in (B), (C) and (D) of the Second Schedule of the Permit of the Central Generating Undertaking, being R8 per metric ton, shall be adjusted from time to time in the manner set out in paragraph (a) (iii) of Tariff (B);

(b) the sum of the net amount determined under paragraph (a) hereof shall be subject to the general discount or general surcharge ruling at the time. With effect from July 1980 the general discount is 8 per cent.

Street lighting

Where the Licensee provides a supply for, and maintains, any street lighting or similar lighting, the charge for such supply and service shall be fixed by special arrangement between the Licensee and the consumer.

The above charges are varied in accordance with the provisions of section 29 of the Act to meet special circumstances applicable to the supply of electricity to certain consumers.

ORANJE-VRYSTAAT • ORANGE FREE STATE

BETHULIE KOOPERATIEWE HANDELSHUIS BPK (in likw.) • Kennis geskied hiermee dat die Tweede Likwidasie- en Distribusierekening van bovermelde kooperasie beskikbaar gehou sal word ter insae van belanghebbendes vir 'n tydperk van 14 dae vanaf 29/8/80, in die kantoor van die Registrateur van Kooperatiewe Verenigings in die M.H.V.S.-gebou, Beatrixstraat, Pretoria, en 'n afskrif daarvan in die Landdroskantoor te Bethulie.

Enige besware wat belanghebbende persone teen hierdie rekening wil inbring, moet, tesame met die redes daarvoor, deur 'n beëdigde verklaring bevestig word en by die Registrateur van Kooperatiewe Verenigings ingedien word nie later as 19/9/80 nie.

P. R. Serfontein, Likwidateur, p/a Naude & Van de Wall, Trustfonteingebou, Posbus 153, Bloemfontein.

MUNISIPALITEIT VAN DENEYSVILLE • VERLATE ERWE.—Kennis geskied hiermee ingevolge die bepalings van artikel 117 (3) van Ordonnansie 8 van 1962 dat dorpsbelastings ten opsigte van ondergenoemde eiendomme waarvan die eienaars nie opgespoor kan word nie, vir 'n tydperk van meer as drie jaar agterstallig is en dat tansy die bedrag van sodanige belastings soos aangedui teenoor die onderskeie eiendomme, tesame met boeterente daarop by die kantoor van die Stadstesourier, Deneysville, betaal word binne drie maande vanaf die laaste publikasie van hierdie kennisgewing sal die Raad kragtens die bevoegdhede aan hom verleen, beslag lê op die betrokke eiendomme en dit per openbare veiling verkoop.

Die geregistreerde eienaar van 'n eiendom hierby betrokke kan te enige tyd voordat sodanige veiling 'n aanvang neem die belastings, rente daarop en ander koste wat die Raad in verband met die betrokke eiendom aangegaan het betaal en sodanige eiendom sal daarna nie verkoop word nie.

Beskrywing van eiendomme

Sekere Erf 16, Deneysville, groot 1 983 vierkante meter, geregistreer in die naam van Jeanetta Petronella le Roux, gebore op 4/11/1888, en gehou kragtens Transportakte 3348/, gedateer 1/8/57. Agterstallige belasting R702.

Sekere Erf 399, Deneysville, groot 1 115 vierkante meter, geregistreer in die naam van Carl Magnus Burholm, gebore op 23/7/21, en gehou kragtens Transportakte 452/67, gedateer 9/2/67. Agterstallige belasting R421.

Sekere Erf 435, Deneysville, groot 1 115 vierkante meter, geregistreer in die naam van Carl Magnus Burholm, gebore op 23/7/21, en gehou kragtens Transportakte 452/67, gedateer 9/2/67. Agterstallige belasting R421.

Sekere Erf 483, Deneysville, groot 1 924 vierkante meter, geregistreer in die naam van Stephanus Laurens Jaate van Rensburg, gebore op 22/1/14, en gehou kragtens Transportakte 4091/71, gedateer 2/7/71. Agterstallige belasting R563.

Sekere Erf 857, Deneysville, groot 1 963 vierkante meter, geregistreer in die naam van Carl Magnus Burholm, gebore op 23/7/21, en gehou kragtens Transportakte 452/67, gedateer 9/2/67. Agterstallige belasting R567.

Sekere Erf 1036, Deneysville, groot 1 115 vierkante meter, geregistreer in die naam van Alexander Benjamin Baker, gebore op 18/3/46, en gehou kragtens Transportakte 7293/73, gedateer 6/9/73. Agterstallige belasting R313.

Sekere Erf 1141, Deneysville, groot 1 981 vierkante meter, geregistreer in die naam van Reginald Havelon Main, gebore op 2/5/21, en gehou kragtens Transportakte 5593/57, gedateer 27/1/57. Agterstallige belasting R645.

Sekere Erf 1171, Deneysville, groot 3 276 vierkante meter, geregistreer in die naam van T. Mazuranic, gebore op 6/3/07, en gehou kragtens Transportakte 3959/49, gedateer 26/8/49. Agterstallige belasting R603.

Sekere Erf 1217, Deneysville, groot 1 784 vierkante meter, geregistreer in die naam van Watson Ralton Nurse, gebore op 26/10/37, en gehou kragtens Transportakte 4450/70, gedateer 10/7/70. Agterstallige belasting R580,48.

Sekere Erf 1220, Deneysville, groot 1 784 vierkante meter, geregistreer in die naam van Watson Ralton Nurse, gebore op 26/10/37, en gehou kragtens Transportakte 4289/74, gedateer 22/5/74. Agterstallige belasting R580,48.

Sekere Erf 1304, Deneysville, groot 1 982 vierkante meter, geregistreer in die naam van Leonard Willie Heynes, gebore op 23/10/29, en gehou kragtens Transportakte 2079/72, gedateer 5/4/72. Agterstallige belasting R293.

Sekere Erf 1307, Deneysville, groot 1 982 vierkante meter, geregistreer in die naam van Leonard Willie Heynes, gebore op 23/10/29, en gehou kragtens Transportakte 447/67, gedateer 9/2/67. Agterstallige belasting R367,10.

Sekere Erf 1469, Deneysville, groot 1 819 vierkante meter, geregistreer in die naam van Joan Patricia Bertha Belgin, gebore Evans, op 23/5/19, en gehou kragtens Transportakte 1327/76, gedateer 23/2/76. Agterstallige belasting R483.

Sekere Erf 1473, Deneysville, groot 1 999 vierkante meter, geregistreer in die naam van Barry John Gibson, gebore op 5/10/43, en gehou kragtens Transportakte 5741/73, gedateer 24/7/73. Agterstallige belasting R604.

Sekere Erf 1481, Deneysville, groot 1 999 vierkante meter, geregistreer in die naam van Barry John Gibson, gebore 5/10/43, en gehou kragtens Transportakte 2648/75, gedateer 12/8/75. Agterstallige belasting R461.

Stadsklerk, Pk. Deneysville (Kennisgewing 9/1980).

MUNICIPALITY OF DENEYSVILLE • DERELICT ERVEN.—Notice is hereby given in terms of section 117 (3) of Ordinance 8 of 1962 that the town rates in respect

of the undermentioned properties of which the owners can not be traced, have been in arrear for a period of more than three years and that unless the amount of rates as specified opposite the undermentioned properties together with penalty interest thereon, are paid at the office of the Town Treasurer, Deneysville, within a period of three months from the date of the last publication of this notice, the Council will take possession of the said properties and same will be sold by public auction. An owner may at any time prior to the commencement of such sale pay, in respect of the property of which he is the registered owner the outstanding rates, interest thereon and other expenses incurred by the Council and such property shall, in the case not be sold.

Description of properties.

Certain Erf 16, Deneysville, in extent 1 983 square metres, registered in the name of Jeanetta Petronella le Roux, born on 4/11/1888, by Deed 3348 of 1/8/57. Rates in arrear R702.

Certain Erf 399, Deneysville, in extent 1 1.5 square metres, registered in the name of Carl Magnus Burholm, born on 23/7/21, by Deed 452/67 of 9/2/67. Rates in arrear R421.

Certain Erf 435, Deneysville, in extent 1 115 square metres, registered in the name of Carl Magnus Burholm, born on 23/7/21, by Deed 452/67 of 9/2/67. Rates in arrear R421.

Certain Erf 483, Deneysville, in extent 1 924 square metres, registered in the name of Stephanus Laurens Janse van Rensburg, born on 22/1/14, by Deed 4091/71 of 2/7/71. Rates in arrear R563.

Certain Erf 857, Deneysville, in extent 1 936 square metres, registered in the name of Carl Magnus Burholm, born on 23/7/21, by Deed 452/67 of 9/2/67. Rates in arrear R567.

Certain Erf 1036, Deneysville, in extent 1 115 square metres, registered in the name of Alexander Benjamin Baker, born on 18/3/46, by Deed 7293/73 of 6/9/73. Rates in arrear R313.

Certain Erf 1141, Deneysville, in extent 1 981 square metres, registered in the name of Reginald Havelon Main, born 2/5/21, by Deed 5593/57 of 27/1/57. Rates in arrear R645.

Certain Erf 1171, Deneysville, in extent 3 276 square metres, registered in the name of T. Mazuranic, born on 6/3/07, by Deed 3959/49 of 26/8/49. Rates in arrear R603.

Certain Erf 1217, Deneysville, in extent 1 784 square metres, registered in the name of Watson Ralton Nurse, born on 26/10/37, by Deed 4450/70 of 10/7/70. Rates in arrear R580,48.

Certain Erf 1220, Deneysville, in extent 1 784 square metres, registered in the name of Watson Ralton Nurse, born on 26/10/07, by Deed 4289/74 of 22/5/74. Rates in arrear R580,48.

Certain Erf 1304, Deneysville, in extent 1 982 square metres, registered in the name of Leonard Willie Heynes, born on 23/10/29, by Deed 2079/72 of 5/4/72. Rates in arrear R293.

Certain Erf 1307, Deneysville, in extent 1 982 square metres, registered in the name of Leonard Willie Heynes born on 23/10/29, by Deed 447/67 of 9/2/67. Rates in arrear R367,10.

Certain Erf 1469, Deneysville, in extent 1 819 square metres, registered in the name of Joan Patricia Bertha Belgin, born Evans, on 23/5/19, by Deed 1327/76 of 23/2/76. Rates in arrear R483.

Certain Erf 1473, Deneysville, in extent 1 999 square metres, registered in the name of Barry John Gibson, born on 5/10/43, by Deed 5741/73 of 24/7/73. Rates in arrear R604.

Certain Erf 1481, Deneysville, in extent 1 999 square metres, registered in the name of Barry John Gibson, born on 5/10/43, by Deed 6248/75 of 12/8/75. Rates in arrear R461.

Town Clerk, P.O. Deneysville (Notice 9/1980).

AANSOEKE OM REGISTRASIE VAN HANDELSMERKE IN SUIDWES-AFRIKA

(Aansoeke aangeneem ingevolge Wet 48 van 1973)

Enigiemand wat beswaar het teen enige van die onderstaande handelsmerke kan, binne die voorgeskrewe tydperk op vorm SM 6, vervat in die Tweede Bylae van die Handelsmerkregulasies in Suidwes-Afrika, 1973, Kennisgewing van Beswaar indien. Die voorgeskrewe tydperk is twee maande na die datum van advertensie. Hierdie tydperk kan op aansoek deur die Registrateur verleng word.

Formele beswaar moet nie ingedien word voordat die applikant om registrasie per brief van die beswaar in kennis gestel is nie, ten einde hom in die geleentheid te stel om sy aansoek terug te trek voordat onkoste in verband met die opstel van 'n Kennisgewing van Beswaar aangegaan word. By gebreke van so 'n kennisgewing aan die applikant, kan koste teen die beswaarmaker uitgewys word.

"B" voor die nommer dui aan Deel B van die Handelsmerkregister.

REGISTRATEUR VAN HANDELSMERKE VIR SUIDWES-AFRIKA

APPLICATIONS FOR REGISTRATION OF TRADE MARKS IN SOUTH WEST AFRICA

(Applications accepted in terms of Act 48 of 1973)

Any person who has grounds for objection to any of the following trade marks may, within the prescribed time, lodge Notice of Opposition on form SM 6 contained in the Second Schedule to the Trade Marks Rules in South West Africa, 1973. The prescribed time is two months after the date of advertisement. This period may on application be extended by the Registrar.

Formal opposition should not be lodged until after notice has been given by letter to the applicant for registration so as to afford him an opportunity of withdrawing his application before the expense of preparing the Notice of Opposition is incurred. Failing such notice to the applicant an opponent may not succeed in obtaining an order for costs.

"B" preceding the number indicates Part B of the Trade Mark Register.

REGISTRAR OF TRADE MARKS FOR SOUTH WEST AFRICA

CLASS 32

80/0474 (SWA), in Class 32: Beer, ale and malt beverages, in the name of Hansa Brauerei Limited, a company organised and existing under the laws of South West Africa/Namibian Company, Swakopmund, South West Africa. Address for service: Messrs Spoor and Fisher, Old Mutual Centre, Andries Street, Pretoria.

HANSA

Associated with No. 75/0618 (SWA).

Filed 30 May 1980.

CLASS 3

80/0012 (SWA), in Class 3: Colouring preparations, shampoos and hair conditioners included in this class, in the name of Revlon (Suisse) S.A., a Swiss company, Limmatstrasse 275, Zurich, Switzerland. Address for service: Messrs D. M. Kisch Inc., Corporation Buildings, Commissioner Street, Johannesburg.

REVLON HAIRSILK

Registration of this mark shall give no right to the exclusive use of the words "Hair" and "Silk" each separately and apart from the mark.

Associated with No. 79/071 (SWA).

Filed 8 January 1980.

CLASS 3

80/0055 (SWA), in Class 3: All products of perfumery and beauty, cosmetics, make-up and rouge, lotions and toilet soap included in this class, in the name of Lancôme Société

Anonyme, a French company, 2º Rue du Faubourg Saint-Honoré, Paris, France. Address for service: Messrs D. M. Kisch Inc., Corporation Buildings, Commissioner Street, Johannesburg.

Registration of this trade mark shall give no right to the exclusive use of a rose device, apart from the specific rose device forming part of this application.

Filed 31 January 1980.

CLASS 9

79/753 (SWA), in Class 9: Electrical, electronic and scientific apparatus and instruments including television; apparatus, instruments, systems and devices for recording, reproducing, transmitting and receiving sound including radios, tape recorders and record players; video-tape recorders; loudspeaker systems and loudspeakers, tuners, amplifiers, receivers, headsets, turntables and record changers; pre-recorded records and tapes; tapes and films, all for reproducing sound; recording discs, cartridges and cassettes; vacuum cleaners and polishing machines and all other domestic electric apparatus and instruments included in this class; parts and accessories for all the aforesaid goods, included in this class; in the name of Wanda Furnishers (Proprietary) Limited, a South African company, Second Floor, Russell Buildings, corner of Harrison and Kerk Streets, Johannesburg. Address for service: Messrs D. M. Kisch Inc., Corporation Buildings, Commissioner Street, Johannesburg.

Applicants admit that registration of this trade mark will not debar other persons from the bona fide descriptive use in the ordinary course of trade of the word "Master".

Registration of this mark shall give no right to the exclusive use of the word "Wonder" separately and apart from the mark.

Associated with No. 79/0754 (SWA)

Filed 18 June 1979.

CLASS 9

79/758 (SWA), in Class 9: Electrical, electronic and scientific apparatus and instruments including television; apparatus, instruments, systems and devices for recording, reproducing, transmitting and receiving sound including radios, tape recorders and record players; video-tape recorders; loud-speakers systems and loudspeakers, tuners, amplifiers, receivers, headsets, turntables and record changers; pre-recorded records and tapes and films, all for reproducing sound; recording discs, cartridges and cassettes; vacuum cleaners and polishing machines and all other domestic electric apparatus and instruments included in this class; in the name of Wanda Furnishers (Proprietary) Limited, a South African company, Second Floor, Russell Buildings, corner of Harrison and Kerk Streets, Johannesburg. Address for service: Messrs D. M. Kisch Inc., Corporation Buildings, Commissioner Street, Johannesburg.

Registration of this trade mark shall give no right to the exclusive use of the letter "W" separately and apart from the mark.

Associated with No. 79/759 (SWA).

Filed 18 June 1979.

CLASS 11

79/0759 (SWA), in Class 11: Installation and apparatus for lighting, heating, cooking, refrigerating, drying, ventilating, steam generating, stoves of all kinds, air conditioners and electrical appliances falling into this class, in the name of Wanda Furnishers (Proprietary) Limited, a South African company, Second Floor, Russell Buildings, corner of Harrison and Kerk Streets, Johannesburg. Address for service: Messrs D. M. Kisch Inc., Corporation Buildings, Commissioner Street, Johannesburg.

Registration of this trade mark shall give no right to the exclusive use of the letter "W" separately and apart from the mark.

Associated with No. 79/0760 (SWA).

Filed 18 June 1979.

CLASS 3

B80/0356 (SWA), in Class 3: In respect of soaps, perfumery, essential oils, cosmetic preparations, in the name of Maibert Gesellschaft mit beschränkter Haftung, a company registered according to the laws of the Federal Republic of Germany, Bonner Street 155, Dusseldorf Holthausen, Germany. Address for service: Messrs Lunnon & Tindall, Standard Bank Chambers, Church Square, Pretoria.

WONG LING

Filed 17 July 1980.

IN LUMINE TUO VIDEBIMUS LUMEN
University of Fort Hare
Together in Excellence

CLASS 20

79/0755 (SWA), in Class 20: Furniture, garden furniture, parts and accessories therefor, articles (not included in other classes) made of wood and cork, mirrors, picture frames, plastic articles not included in other classes, in the name of Wanda Furnishers (Proprietary) Limited, a South African company, Second Floor, Russell Buildings, corner of Harrison and Kerk Streets, Johannesburg. Address for service: Messrs D. M. Kisch Inc., Corporation Buildings, Commissioner Street, Johannesburg.

Applicants admit that registration of this trade mark will not debar other persons from the bona fide descriptive use in the ordinary course of trade of the word "Master".

Registration of this mark shall give no right to the exclusive use of the word "Wonder" separately and apart from the mark.

Associated with No. 79/0756 (SWA).

Filed 18 June 1979.

CLASS 42

79/0762 (SWA), in Class 42: Services relating to furniture, stores, discount stores, retailing stores, wholesaling activities, stores dealing in household goods included in this class, in the name of Wanda Furnishers (Proprietary) Limited, a South African company, Second Floor, Russell Buildings, corner of Harrison and Kerk Streets, Johannesburg. Address for service: Messrs D. M. Kisch Inc., Corporation Buildings, Commissioner Street, Johannesburg.

Registration of this trade mark shall give no right to the exclusive use of the letter "W" separately and apart from the mark.

Associated with No. 79/0758 (SWA).

Filed 18 June 1979.

CLASS 2

79/280 (SWA), in Class 2: Paints, paint powders, varnishes (other than insulating varnishes), lacquers, enamels, protective coatings, preservatives included in Class 2 against rust and against deterioration of wood and other surfaces, colouring matters, dyestuffs, primers, filling agents included in Claim 2 for treating walls and the like surfaces, thinners, natural resins, metals in foil and powder form for painters and decorators, decorative coatings, stains, painters' oils for colouring, reducing and staining, priming fillers in liquid and paste form, epoxies and zinc-rich coatings, paint driers, mordants, whiting, in the name of AECI Limited, 16th Floor, Office Tower, Carlton Centre, Commissioner Street, Johannesburg, Transvaal, Republic of South Africa. Address for service: Messrs Adams & Adams, Masada Buildings, Paul Kruger Street, Pretoria.

AUTOKOTE

Applicants admit that registration of this trade mark shall not debar other persons from the bona fide descriptive use, in the ordinary course of trade, of the word "Auto" or of the word "Coat".

Associated with No. 79/281 (SWA).

Filed 22 March 1979.

CLASS 42

79/0757 (SWA), in Class 42: Services relating to furniture stores, discount stores, retailing stores, wholesaling activities, stores dealing in household goods included in this class, in the name of Wanda Furnishers (Proprietary) Limited, a South African company, Second Floor, Russell Buildings, corner of Harrison and Kerk Streets, Johannesburg. Address for service: Messrs D. M. Kisch Inc., Corporation Buildings, Commissioner Street, Johannesburg.

Applicants admit that registration of this trade mark will not debar other persons from the bona fide descriptive use of the ordinary course of trade of the word "Master".

Registration of this mark shall give no right to the exclusive use of the word "Wonder" separately and apart from the mark.

Associated with No. 79/0753 (SWA).

Filed 18 June 1979.

CLASS 21

79/9761 (SWA), in Class 21: Instruments and material for cleaning purposes including domestic non electric floor and carpet polishing and cleaning machines; parts and accessories for all the aforesaid goods included in this class; in the name of Wanda Furnishers (Proprietary) Limited, a South African company, Second Floor, Russell Buildings, corner of Harrison and Kerk Streets, Johannesburg. Address for service: Messrs D. M. Kisch Inc., Corporation Buildings, Commissioner Street, Johannesburg.

Registration of this trade mark shall give no right to the exclusive use of the letter "W" separately and apart from the mark.

Associated with No. 79/0762 (SWA).

Filed 18 June 1979.

CLASS 20

79/0760 (SWA), in Class 20: Furniture, garden furniture, parts and accessories therefor articles (not included in other classes) made of wood and cork, mirrors, picture frames,

plastic articles not included in other classes, in the name of Wanda Furnishers (Proprietary) Limited, a South African company, Second Floor, Russell Buildings, corner of Harrison and Kerk Streets, Johannesburg. Address for service: Messrs D. M. Kisch Inc., Corporation Buildings, Commissioner Street, Johannesburg.

Registration of this trade mark shall give no right to the exclusive use of the letter "W" separately and apart from the mark.

Associated with No. 79/0761 (SWA).

Filed 18 June 1979

CLASS 21

79/0756 (SWA), in Class 21: Instruments and material for cleaning purposes including domestic non-electric floor and carpet polishing and cleaning machines; parts and accessories for all the aforesaid goods included in this class; in the name of Wanda Furnishers (Proprietary) Limited, a South African company, Second Floor, Russell Buildings, corner of Harrison and Kerk Streets, Johannesburg. Address for service: Messrs D. M. Kisch Inc., Corporation Buildings, Commissioner Street, Johannesburg.

Applicants admit that registration of this trade mark will not debar other persons from the bona fide descriptive use in the ordinary course of trade of the word "Master".

Registration of this mark shall give no right to the exclusive use of the word "Wonder" separately and apart from the mark.

Associated with No. 79/0757 (SWA).

Filed 18 June 1979.

CLASS 2

79/281 (SWA), in Class 2: Paints, paint powders, varnishes (other than insulating varnishes), lacquers, enamels, protective coatings, preservatives included in Class 2 against rust and against deterioration of wood and other surfaces, colouring matters, dyestuffs, primers, filling agents included in Class 2 for treating walls and the like surfaces, thinners, natural resins, metals in foil and powder form for painters and decorators, decorative coatings, stains, painters' oils for colouring, reducing and staining, priming fillers in liquid and paste form, epoxies and zinc-rich coatings, paint driers, mordants, whiting, in the name of AECI Limited, 16th Floor, Office Tower, Carlton Centre, Commissioner Street, Johannesburg, Transvaal, Republic of South Africa. Address for service: Messrs Adams & Adams, Masada Buildings, Paul Kruger Street, Pretoria.

AUTOBOND

Applicants admit that registration of this trade mark shall not debar other persons from the bona fide descriptive use, in the ordinary course of trade, of the word "Auto" or of the word "Bond".

Associated with No. 79/282 (SWA).

Filed 22 March 1979.

CLASS 11

79/0754 (SWA), in Class 11: Installation and apparatus for lighting, heating, cooking refrigerating, drying, ventilating, steam generating, stoves of all kinds, air conditioners and electrical appliances falling into this class, in the name of Wanda Furnishers (Proprietary) Limited, a South African company, Second Floor, Russell Buildings, corner of Harrison and Kerk Streets, Johannesburg. Address for service: Messrs D. M. Kisch Inc., Corporation Buildings, Commissioner Street, Johannesburg.

Registration of this mark shall give no right to the exclusive use of the word "Wonder" separately and apart from the mark.

Applicants admit that registration of this trade mark will not debar other persons from the bona fide descriptive use in the ordinary course of trade of the word "Master"

Associated with No. 79/0755 (SWA).

Filed 18 June 1979.

CLASS 24

79/0702 (SWA), in Class 24: Tissues (piece goods); bed and table covers; textile articles including furnishing fabrics not included in other classes; in the name of David Whitehead & Sons (S.A.) Limited, a South African company, Maidstone, Natal. Address for service: Messrs D. M. Kisch Inc., Corporation Buildings, Commissioner Street, Johannesburg.

Section 12 application.

Filed 5 June 1979.

CLASS 2

79/282 (SWA), in Class 2: Paints, paint powders, varnishes (other than insulating varnishes), lacquers, enamels, protective coatings, preservatives included in Class 2 against rust and against deterioration of wood and other surfaces, colouring matters, dyestuffs, primers, filling agents included in Class 2 for treating walls and the like surfaces, thinners, natural resins, metals in foil and powder form for painters and decorators, decorative coatings, stains, painters' oils for colouring, reducing and staining, priming fillers in liquid and paste form, epoxies and zinc-rich coatings, paint driers, mordants, whiting, in the name of AECI Limited, 16th Floor, Office Tower, Carlton Centre, Commissioner Street, Johannesburg.

IN LUMINE TUO VIDEBIMUS LUMEN
Together in Excellence

Transvaal, Republic of South Africa. Address for service: Messrs Adams & Adams, Masada Buildings, Paul Kruger Street, Pretoria.

AUTOFIL

Applicants admit that the registration of this trade mark shall not debar other persons from the bona fide descriptive use, in the ordinary course of trade, of the word "Fill".

Associated with No. 79/283 (SWA).

Filed 22 March 1979.

CLASS 1

80/0326 (SWA), in Class 1: Chemical products used in industry, in science, in medical laboratories and for diagnostic purposes, medical diagnostic media including adjubants for medical investigations, including those use in chemical, biological, bacteriological, hematological, physical and similar test methods, in the name of Roche Products (Proprietary) Limited, 4 Brewery Street, Isando, Transvaal, Republic of South Africa. Address for service: Messrs Adams and Adams, Masada Buildings, Paul Kruger Street, Pretoria.

ROCHE

Applicants admit that registration of this trade mark shall not debar other persons bearing the surname "Roche" from the bona fide use in the ordinary course of trade of such surname.

Associated with Nos. 80/0327 (SWA) and 74/0130 (SWA).

Filed 8 April 1980.

CLASS 3

80/0327 (SWA), in Class 3: Soaps, perfumery, essential oils, cosmetics, hair lotions, dentifrices, aromatics, in the name of Roche Products (Proprietary) Limited, 4 Brewery Street, Isando, Transvaal, Republic of South Africa. Address for service: Messrs Adams and Addams, Masada Buildings, Paul Kruger Street, Pretoria.

ROCHE

Applicants admit that registration of this trade mark shall not debar other persons bearing the surname "Roche" from the bona fide use in the ordinary course of trade of such surname.

Associated with No. 80/0328 (SWA).

Filed 8 April 1980.

CLASS 5

80/0328 (SWA), in Class 5: In respect of pharmaceutical, veterinary, and sanitary substances, preparations and products; foods and feeds included in this class, including preparations for the enrichment of foodstuffs and feedstuffs; dental preparations; dental wax and similar products; material for stopping teeth; bandaging material; plasters; deodorisers; disinfectants; preparations for killing weeds and destroying vermin; in the name of Roche Products (Proprietary) Limited, 4 Brewery Street, Isando, Transvaal, Republic of South Africa. Address for service: Messrs Adams & Adams, Masada Buildings, Paul Kruger Street, Pretoria.

ROCHE

Applicants admit that registration of this trade mark shall not debar other persons bearing the surname "Roche" from the bona fide use in the ordinary course of trade of such surname.

It is a condition of registration that the mark shall be used only as a housemark.

Associated with No. 80/0329 (SWA).

Filed 8 April 1980.

CLASS 9

80/0329 (SWA), in Class 9: Video-tape recordings of medical educational topics, in the name of Roche Products (Proprietary) Limited, 4 Brewery Street, Isando, Transvaal, Republic of South Africa. Address for service: Messrs Adams and Adams, Masada Buildings, Paul Kruger Street, Pretoria.

ROCHE

Applicants admit that registration of this trade mark shall not debar other persons bearing the surname "Roche" from the bona fide use in the ordinary course of trade of such surname.

Associated with No, 80/0330.

Filed 8 April 1980.

CLASS 10

80/0330 (SWA), in Class 10: Surgical, medical, dental and veterinary instruments, apparatus and equipment; artificial limbs, eyes and teeth and all other prosthetic articles; products used for curative purposes, or in relation to the health of human beings, animals and other creatures; in the name of Roche Products (Proprietary) Limited, 4 Brewery Street, Isando, Transvaal, Republic of South Africa. Address for service: Messrs Adams and Adams, Masada Buildings, Paul Kruger Street, Pretoria.

ROCHE

Applicants admit that registration of this trade mark shall not debar other persons bearing the surname "Roche" from the bona fide use in the ordinary course of trade of such surname.

Associated with No. 80/0331 (SWA).

Filed 8 April 1980.

IN LUMINE TUO
University of Fort Hare
Together in Excellence

CLASS 16

80/0331 (SWA), in Class 16: Magazines, printed matter, in the name of Roche Products (Proprietary) Limited, 4 Brewery Street, Isando, Transvaal, Republic of South Africa. Address for service: Messrs Adams and Adams, Masada Buildings, Paul Kruger Street, Pretoria.

Applicants admit that registra. · of this trade mark shall not debar other persons bearing the surname "Roche" from the bona fide use in the ordinary course of trade of such surname.

Associated with No. 80/0332 (SWA).

Filed 8 April 1980.

CLASS 29

80/0332 (SWA), in Class 29: Foodstuffs and preparations for the enrichment thereof; flavourings and aromatics included in this class; in the name of Roche Products (Proprietary) Limited, 4 Brewery Street, Isando, Transvaal, Republic of South Africa. Address for service: Messrs Adams and Adams, Masada Buildings, Paul Kruger Street, Pretoria.

Applicants admit that registration of this trade mark shall not debar other persons bearing the surname "Roche" from the bona fide use in the ordinary course of trade of such surname.

Associated with No. 80/0333 (SWA).

Filed 8 April 1980.

CLASS 30

80/0333 (SWA), in Class 30: Foodstuffs and preparations for the enrichment thereof; flavourings and aromatics included in this class; in the name of Roche Products (Proprietary) Limited, 4 Brewery Street, Isando, Transvaal, Republic of South Africa. Address for service: Messrs Adams and Adams, Masada Buildings, Paul Kruger Street, Pretoria.

Applicants admit that registration of this trade mark shall not debar other persons bearing the surname "Roche" from the bona fide use in the ordinary course of trade of such surname.

Associated with No. 80/0334 (SWA).

Filed 8 April 1980.

CLASS 31

80/0334 (SWA), in Class 31: Foodstuffs, feedstuffs for animals, and animal feed additives; preparations for the enrichment of all the aforesaid goods; flavourings and aromatics included in this class; in the name of Roche Products (Proprietary) Limited, 4 Brewery Street, Isando, Transvaal, Republic of South Africa. Address for service: Messrs Adams and Adams, Masada Buildings, Paul Kruger Street, Pretoria.

Applicants admit that registration of this trade mark shall not debar other persons bearing the surname "Roche" from the bona fide use in the ordinary course of trade of such surname.

Associated with No. 80/0335 (SWA).

Filed 8 April 1980.

CLASS 41

80/0335 (SWA), in Class 41: Educational services, in the name of Roche Products (Proprietary) Limited, 4 Brewery Street, Isando, Transvaal, Republic of South Africa. Address for service: Messrs Adams and Adams, Masada Buildings, Paul Kruger Street, Pretoria.

Applicants admit that registration of this trade mark shall not debar other persons bearing the surname "Roche" from the bona fide use in the ordinary course of trade of such surname.

Associated with No. 80/0336 (SWA).

Filed 8 April 1980.

CLASS 42

80/0336 (SWA), in Class 42: Services in the field of medicine, in the name of Roche Products (Proprietary) Limited, 4 Brewery Street, Isando, Transvaal, Republic of South Africa. Address for service: Messrs Adams and Adams, Paul Kruger Street, Pretoria.

Applicants admit that registration of this trade mark shall not debar other persons bearing the surname "Roche" from the bona fide use in the ordinary course of trade of such surname.

Associated with No. 80/0326 (SWA).

Filed 8 April 1980.

University of Fort Hare
Together in Excellence

CLASS 2

79/283 (SWA), in Class 2: Paints, paint powders, varnishes (other than insulating varnishes), lacquers, enamels, protective coatings, preservatives included in Class 2 against rust and against deterioration of wood and other surfaces, colouring matters, dyestuffs, primers, filling agents included in Class 2 for treating walls and the like surfaces, thinners, natural resins, metals in foil and powder form for painters and decorators, decorative coatings, stains, painters' oils for colouring, reducing and staining, priming fillers in liquid and paste form, epoxies and zinc-rich coatings, paint driers, mordants, whiting, in the name of AECI Limited, 16th Floor, Office Tower, Carlton Centre, Commissioner Street, Johannesburg, Transvaal, Republic of South Africa. Address for service: Messrs Adams & Adams, Masada Buildings, Paul Kruger Street, Pretoria.

AUTOCRON

Applicants admit that registration of this trade mark shall not debar other persons from the bona fide descriptive use, in the ordinary course of trade, of the word "Auto".

Associated with No. 79/284 (SWA.)

Filed 22 March 1979.

CLASS 2

79/284 (SWA), in Class 2: Paints, paint powders, varnishes (other than insulating varnishes), lacquers, enamels, protective coatings, preservatives included in Class 2 against rust and against deterioration of wood and other surfaces, colouring matters, dyestuffs, primers, filling agents included in Class 2 for treating walls and the like surfaces, thinners, natural resins, metals in foil and powder form for painters and decorators, decorative coatings, stains, painters' oils for colouring, reducing and staining, priming fillers in liquid paste form, epoxies and zinc-rich coatings, paint driers, mordants, whiting, in the name of AECI Limited, 16th Floor, Office Tower, Carlton Centre, Commissioner Street, Johannesburg, Transvaal, Republic of South Africa. Address for service: Messrs Adams & Adams, Masada Buildings, Paul Kruger Street, Pretoria.

AUTOTHANE

Applicants admit that registration of this trade mark shall not debar other persons from the bona fide descriptive use, in the ordinary course of trade, of the word "Auto".

Associated with No. 79/285 (SWA).

Filed 22 March 1979.

CLASS 2

79/285 (SWA), in Class 2: Paints, paint powders, varnishes (other than insulating varnishes), lacquers, enamels, protective coatings, preservatives included in Class 2 against rust and against deterioration of wood and other surfaces, colouring matters, dyestuffs, primers, filling agents included in Class 2 for treating walls and the like surfaces, thinners, natural resins, metals in foil and powder form for painters and decorators, decorative coatings, stains, painters' oils for colouring, reducing and staining, priming fillers in liquid and paste form, epoxies and zinc-rich coatings, paint driers, mordants, whiting, in the name of AECI Limited, 16th Floor, Office Tower, Carlton Centre, Commissioner Street, Johannesburg, Republic of South Africa. Address for service: Messrs Adams & Adams, Masada Buildings, Paul Kruger Street, Pretoria.

AUTOPOL

Applicants admit that registration of this trade mark shall not debar other persons from the bona fide descriptive use, in the ordinary course of trade of the word "auto".

Associated with No. 79/286 (SWA).

Filed 22 March 1979.

CLASS 2

79/286 (SWA), in Class 2: Paints, paint powders, varnishes (other than insulating varnishes), lacquers, enamels, protective coatings, preservatives included in Class 2 against rust and against deterioration of wood and other surfaces, colouring matters, dyestuffs, primers, filling agents included in Class 2 for treating walls and the like surfaces, thinners, natural resins, metals in foil and powder form for painters and decorators, decorative coatings, stains, painters' oils for colouring, reducing and staining, priming fillers in liquid and paste form, epoxies and zinc-rich coatings, paint driers, mordants, whiting, in the name of AECI Limited, 16th Floor, Office Tower, Carlton Centre, Commissioner Street, Johannesburg, Transvaal, Republic of South Africa. Address for service: Messrs Adams & Adams, Masada Buildings, Paul Kruger Street, Pretoria.

AUTOBRIGHT

Applicants admit that registration of this trade mark shall not debar other persons from the bona fide descriptive use in the ordinary course of trade of the word "auto", or of the word "bright".

Associated with No. 79/287 (SWA).

Filed 22 March 1979.

CLASS 2

79/287 (SWA), in Class 2: Paints, paint powders, varnishes (other than insulating varnishes), lacquers, enamels, protective coatings, preservatives included in Class 2 against rust and against deterioration of wood and other surfaces, colouring matters, dyestuffs, primers, filling agents included in Class 2 for treating walls and the like surfaces, thinners, natural resins, metals in foil and powder form for painters and decorative coatings, stains, painters' oils for colouring, reducing and staining, priming fillers in liquid and paste form, epoxies and zinc-rich coatings, paint driers, mordants, whiting, in the name of AECI Limited, 16th Floor, Office Tower, Carlton Centre, Commissioner Street, Johannesburg, Transvaal, Republic of South Africa. Address for service: Messrs Adams & Adams, Masada Buildings, Paul Kruger Street, Pretoria.

AUTOPHOS

Associated with No. 79/288 (SWA).

Filed 22 March 1979.

CLASS 2

79/288 (SWA), in Class 2: Paints, paint powders, varnishes (other than insulating varnishes), lacquers, enamels, protective coatings, preservatives included in Class 2 against rust and against deterioration of wood and other surfaces, colouring matters, dyestuffs, primers, filling agents included in Class 2 for treating walls and the like surfaces, thinners, natural resins, metals in foil and powder form for painters and decorators, decorative coatings, stains, painters' oils for colouring, reducing and staining, priming fillers in liquid and paste form, epoxies and zinc-rich coatings, paint driers, mordants, whiting, in the name of AECI Limited, 16th Floor, Office Tower, Carlton Centre, Commissioner Street, Johannesburg, Transvaal, Republic of South Africa. Address for service: Messrs Adams & Adams, Masada Buildings, Paul Kruger Street, Pretoria.

AUTOPRIMER

Applicants admit that registration of the trade mark shall not debar persons from the bona fide descriptive use, in the ordinary course of trade of the word "auto" or of the word "prime".

Associated with No. 79/289 (SWA).

Filed 22 March 1979.

CLASS 2

79/289 (SWA), in Class 2: Paints, paint powders, varnishes (other than insulating varnishes), lacquers, enamels, protective coatings, preservatives included in Class 2 against rust and against deterioration of wood and other surfaces, colouring matters, dyestuffs, primers, filling agents included in Class 2 for treating walls and the like surfaces, thinners, natural resins, metals in foil and powder form for painters and decorators, decorative coatings, stains, painters' oils for colouring, reducing and staining, priming fillers in liquid and paste form, epoxies and zinc-rich coatings, paint driers, mordants, whiting, in the name of AECI Limited, 16th Floor, Office Tower, Carlton Centre, Commissioner Street, Johannesburg, Transvaal, Republic of South Africa. Address for service: Messrs Adams & Adams, Masada Buildings, Paul Kruger Street, Pretoria.

AUTOKLEEN

Applicants admit that registration of the trade mark shall not debar other persons from the bona fide descriptive use, in the ordinary course of trade, of the word "auto" or of the word "clean"

Associated with No. 79/280 (SWA).

Filed 22 March 1979.

KENNISGEWING

WYSIGING VAN HANDELSMERK 79/239 (SWA) INGEVOLGE ARTIKEL 34 (1) VAN DIE WET OP HANDELSMERKE IN SUIDWES-AFRIKA, No. 48 VAN 1973

Aansoek is gedoen vir die wysiging van bogenoemde handelsmerke soos hieronder aangedui:

NOTICE

AMENDMENT OF TRADE MARK 77/239 (SWA) IN TERMS OF SECTION 34 (1) OF THE TRADE MARKS IN SOUTH WEST AFRICA ACT, No. 48 OF 1973

Application has been made for amendment of above-mentioned trade marks to the form shown hereunder:

REKOTOX

The disclaimer regarding the letter "P" has been deleted.

Enige persoon wat beswaar aanteken teen die wysiging van die merke moet binne twee maande vanaf die datum van hierdie bekendmaking die wysiging teenstaan. Die redes tot beswaar moet op Vorm SM 44 gestel word en moet aan die Registrateur van Handelsmerke, Privaatsak X400, Pretoria, gerig word.

H. J. Coetzee, Registrateur van Handelsmerke.
Die Handelsmerkkantoor, Pretoria.

The disclaimer regarding the letter "P" has been deleted.

Any person who objects to the amendment may within two months from date of this notice oppose the amendment. The reasons for objection must be stated on Form SM 44 and this form must be lodged with the Registrar of Trade Marks for South West Africa, Private Bag X400, Pretoria.

H. J. Coetzee, Registrar of Trade Marks.
The Trade Marks Office, Pretoria.

AGROANIMALIA

Hierdie publikasie is 'n voortsetting van die Suid-Afrikaanse Tydskrif vir Landbouwetenskap Jaargang 1 tot 11, 1958-1968 en bevat artikels oor Diereproduksie en -tegnologie, Diereversorging en -ekologie, Fisiologie, Genetika en Teelt, Suiwelkunde en Voeding. Vier dele van die tydskrif word per jaar gepubliseer.

Verdienstelike landboukundige bydraes van oorspronklike wetenskaplike navorsing word vir plasing in hierdie tydskrif verwelkom. Voorskrifte vir die opstel van sulke bydraes is verkrygbaar van die Direkteur, Landbou-inligting, Privaatsak X144, Pretoria, aan wie ook alle navrae in verband met die tydskrif gerig moet word.

Die tydskrif is verkrygbaar van bogenoemde adres teen R1,50 per eksemplaar of R6 per jaar, posvry (Buitelands R1,75 per eksemplaar of R7 per jaar).

Verkoopbelasting moet by alle binnelandse bestellings ingesluit word.

AGROANIMALIA

This publication is a continuation of the South African Journal of Agricultural Science Vol. 1 to 11, 1958-1968 and deals with Animal Production and Technology, Livestock Management and Ecology, Physiology, Genetics and Breeding, Dairy Science and Nutrition. Four parts of the journal are published annually.

Contributions of scientific merit on agricultural research are invited for publication in this journal. Directions for the preparation of such contributions are obtainable from the Director, Agricultural Information, Private Bag X144, Pretoria, to whom all communications in connection with the journal should be addressed.

The journal is obtainable from the above-mentioned address at R1,50 per copy or R6 per annum, post free (Other countries R1,75 per copy or R7 per annum).

Sales tax must accompany all inland orders.

MEMOIRS VAN DIE BOTANIESE OPNAME VAN SUID-AFRIKA

Die memoirs is individuele verhandelings, gewoonlik ekologies van aard, maar soms handel dit oor taksonomiese of ekonomiese-plantkundige onderwerpe. Nege-en-dertig nommers is reeds gepubliseer waarvan sommige uit druk is.

Verkrygbaar van die Direkteur, Afdeling Landbou-inligting, Privaatsak X144, Pretoria.

Verkoopbelasting moet by binnelandse bestellings ingesluit word.

MEMOIRS OF THE BOTANICAL SURVEY OF SOUTH AFRICA

The memoirs are individual treatises usually of an ecological nature, but sometimes taxonomic or concerned with economic botany. Thirty-nine numbers have been published, some of which are out of print.

Obtainable from the Director, Division of Agricultural Information, Private Bag X144, Pretoria.

Sales tax must accompany inland orders.

BOEDELWETTEKENNISGEWINGS
ADMINISTRATION OF ESTATES ACTS NOTICES

Vorm/Form J 297

VERKIESING VAN EKSEKUTEURS, KURATORS EN VOOGDE

Aangesien die boedels van die persone hieronder vermeld nie verteenwoordig is nie word hierby deur Meesters van die Hooggeregshof van Suid-Afrika aan belanghebbendes kennis gegee dat byeenkomste ten opsigte van die verskillende boedels op die plekke, datums en tye vermeld, gehou sal word, met die doel om 'n persoon of persone te kies vir goedkeuring deur die onderskeie Meesters as geskik en bekwaam om deur hulle aangestel te word as eksekuteurs, kurators of voogde, na gelang van omstandighede, met aanduiding van die besonderhede in die volgorde: Boedelnommer, familienaam en voorname van oorlede persoon, en beroep; datum van oorlye; plek, datum en tyd van byeenkoms.

In 'n plek waarin 'n kantoor van 'n Meester is, word die byeenkoms voor die Meester gehou en in ander plekke voor die Landdros.

L.W.—Items aan die linkerkant met 'n sterretjie (*) gemerk, dui aan die verkiesing van 'n voog of kurator; andersins word 'n eksekuteur gekies.

ELECTION OF EXECUTORS, CURATORS AND TUTORS

The estates of the persons mentioned below being unrepresented, interested parties are hereby given notice by Master of the Supreme Court of South Africa, that meetings will be held in the several estates at the places, dates and times specified, for the purpose of selecting some person or persons for approval by the respective Masters, as fit and proper to be appointed by them as executors, curators or tutors, as the case may be, indicating the particulars as follows: Estate number, surname and christian names of deceased, and occupation; date of death; place, date and time of meeting.

Meetings in a place in which there is as Master's Office, will be held before the Master; elsewhere they will be held before the Magistrate.

N.B.—Items indicated by an asterisk (*) on the left-hand side denote the election of a tutor or curator; otherwise an executor is to be elected.

KAAP · CAPE

7011/67—KRUGER, Elizabeth, housewife. 5/8/61. Goodwood, 10/9/80, 09h00.

5093/80—OPPERMAN, Susarah Maria. Simonstad, 11/9/80, 10h00.

4710/80—VIRET, Richard, pensioner. 29/6/80. Cape Town, 9/9/80, 10h30.

5124/80—HOOGBAARD, Jan Salmon, loodgieter. 6/7/80. Heidelberg, 15/9/80, 10h00.

1901/66—ELLIS, Edith. 17/4/66. Oudtshoorn, 10/9/80, 10h00.

5022/80—KEYSER, Gerhardus Schonken, gepensioeneerde. 10/6/80. Heidelberg, 15/9/80, 10h00.

4742/80—MABOLO, Christian, business man. 14/6/80. Cape Town, 9/9/80, 10h30.

2286/64—JOSEPH, Henry Paul, labourer. 5/10/63. Wynberg, 9/9/80, 09h00.

3270/80—GEYSMAN, Adriaan William, pensioner. 5/10/76. Wynberg, 9/9/80, 09h00.

5157/80—BASSON, David Sarel, groente karweier. 29/7/80. Calvinia, 24/10/80, 10h00.

5127/80—PIETERSE, Louise, gebore Le Tier, huisvrou. 20/10/51. Caledon, 12/9/80, 10h00.

5016/80—ARENDSE, Sulaiman Solomon, office assistant. 4/7/80. Cape Town, 9/9/80, 10h30.

5060/80—WESSON, William John, retired. 19/7/80. Cape Town, 9/9/80, 10h30.

5225/80—MITCHELL, Doreen Margaret, housewife. 30/7/80. Somerset West, 11/9/80, 09h00.

4965/80—WILSON, Christopher Jacobus, metaalwerker. 11/5/80. Bellville, 9/9/80, 11h00.

TRANSVAAL

10110/80—CLARK, Martha, housewife. 18/7/80. Johannesburg, 12/9/80, 09h00.

*9803/79—BRITS, Johanna Francina, huisvrou. 26/7/79. Pretoria, 10/9/80, 09h00.

8703/80—SMITH, Donald Edward, retired. 8/7/80. Randburg, 12/9/80, 10h00.

7910/80—FERNANDES, Antonio Jose, tracker. 10/4/80. Rustenburg, 10/9/80, 09h00.

9732/80—DU PLESSIS, Johan Petrus, S.A. Weermag. 30/6/80. Johannesburg, 12/9/80, 09h00.

9991/80—BECKER, Magdalena Cornelia, gepensioeneerde. 13/7/80. Pietersburg, 12/9/80, 09h00.

9993/80—BRESLER, Johannes Augustus, verkoopsman. 12/7/80. Vereeniging, 12/9/80, 10h00.

10183/80—NATALUCCI, Hilda Arndt, retired artist. 21/6/80. Johannesburg, 12/9/80, 09h00.

9582/80—GIOKOS, John, electrician. 11/7/80. Germiston, 12/9/80, 09h30.

10091/80—BUITENDAG, Johannes Petrus, senior ambagsman. 11/7/80. Johannesburg, 12/9/80, 09h00.

4423/80—OOSTHUIZEN, Phillipus Jacob Rudolph, diensplichtige. 14/3/80. Oberholzer, 12/9/80, 09h00.

7743/80—NISBET, Peter. 26/4/80. Port Elizabeth, 11/9/80, 14h00.

*303/71—JACOBSZ, Hendrik Willem, pasiënt. Bethal, 12/9/80, 09h00.

4485/80—MAYET, Ismail Amojee. 11/3/80. Johannesburg, 12/9/80, 09h00.

6235/80—LE ROUX, Johannes Petrus Christiaan, gepensioeneerde. 11/4/80. Bellville, 9/9/80, 09h00.

6795/78—GRIEVE, James Wallace, retired engineer. 13/6/78. Johannesburg, 12/9/80, 09h00.

7025/80—BEZUIDENHOUT, Blanche Lorraine, bookkeeper. 3/6/80. Johannesburg, 12/9/80, 09h00.

9975/80—VORBECK, Vercueil Albert Karl Johan Frans, werksbestuurder. 27/7/80. Pretoria, 11/9/80, 09h00.

9994/80—CORPETTI, Emelia Rosa, housewife. 14/7/80. Johannesburg, 12/9/80, 09h00.

10194/80—DU PLESSIS, Susanna Lasea Aletta. 22/7/80. Pretoria, 11/9/80, 09h00.

10224/80—SCHOLTZ, Christoffel Cornelis, dispatch clerk. 5/7/80. Germiston, 12/9/80, 09h30.

10096/80—BROWN, Dora (Doreen), bookkeeper. 20/6/80. Benoni, 10/9/80, 10h00.

*14198/79—DEMBSKEY, Anna Maria, housewife. 27/9/73. Krugersdorp, 12/9/80, 09h30.

10147/80—JACOBS, Christiaan Hendrik Stefanus, klerk. 5/5/80. Vereeniging, 12/9/80, 10h00.

4870/80—RABIYA, Noor Mahomed, housewife. 30/7/79. Pretoria, 12/9/80, 09h00.

10208/80—SEGAIL, Simon, managing director. 31/5/80. Johannesburg, 12/9/80, 09h00.

10370/80—DE BRUIN, Pieter William, gepensioeneerde. 6/8/80. Nigel, 10/9/80, 10h00.

10407/80—MILLER, Magdalena Cornelia, housewife. 19/7/80. Pretoria, 12/9/80, 09h00.

10119/80—ENGELBRECHT, Vivien, articled clerk. 20/7/80. Randburg, 11/9/80, 10h00.

10049/80—PALMER, May Mona. 21/7/80. Springs, 10/9/80, 10h00.

10218/78—GOLDICK, Phyllis Louise, retired. 23/6/76. Pretoria, 12/9/80, 09h00.

9928/80—BELLAMEY, Gerald Henry, management consultant. 13/6/80. Johannesburg, 12/9/80, 09h00.

5018/80—MACEDO, Moises Abreu, retired. 23/2/80. Randburg, 12/9/80, 10h00.

10418/80—PADICHEEY, Wolanathan, barman. 3/1/80. Benoni, 10/9/80, 10h00.

10318/80—ISAACS, Philip Kenneth, verwer. 8/12/79. Pretoria, 12/9/80, 09h00.

7827/80—COETZEE, Douw Gerbrand, unemployed. 6/5/80. Kempton Park, 10/9/80, 09h00.

10017/80—HARDIE, Robert, pensioner. 2/7/80. Johannesburg, 12/9/80, 09h00.

NATAL

3966/80—STRYDOM, Jacobus Johannes Lawrence, pensioner. 11/12/78. Durban, 11/9/80, 14h00.

3854/80—HYGATE, Ina Muriel, pensioner. 1/7/80. Durban, 11/9/80, 14h00.

3926/80—POSTHUMUS, Edna, housewife. 23/7/80. Durban, 11/9/80, 14h00.

3492/80—NAICKER, Kanniapen Subramoney, barrier attendant. 20/6/80. Durban, 11/9/80, 14h00.
3918/80—BEHARI, Kousilla, housewife. 6/8/79. Durban, 11/9/80, 14h00.
3971/80—WALLACE, Edgar Luke, metal worker. 3/5/80. Durban, 11/9/80, 14h00.
3929/80—SOOKLAL, Deonarain, driver. 9/5/80. Durban, 11/9/80, 14h00.
2217/80—LINDA, Nomavutuluka (Noma Linda). 23/1/77. Verulam, 11/9/80, 10h00.
3894/80—MEY, Hendrik Stephanus, operateur. 12/7/80. Witbank, 11/9/80, 10h00.
3901/80—GANESH, Ratanjee, unemployed. 21/10/79. Durban, 11/9/80, 14h00.
3887/80—HEIJLEN, Vincentius Charles Albert, konstruksie inspekteur. 19/7/80. Newcastle, 15/9/80, 10h00.
3303/80—GOBINDPARSAD (Seosunker Gobindparsad), storeman. 3/6/80. Durban, 11/9/80, 14h00.
2166/77/3B—VATHER, Pathmavathee, housewife. 20/3/77. Pietermaritzburg, 10/9/80, 10h00.
3073/80—RAGHUBIR, Ramlal, carpenter. 10/5/80. Durban, 11/9/80, 14h00.
3834/80—APPALSAMY, unemployed. 9/7/80. Durban, 11/9/80, 14h00.

ORANJE-VRYSTAAT • ORANGE FREE STATE

2391/78—DU TOIT, Bernardus Johannes, gepensioeneerde. 31/10/78. Odendaalsrus, 8/9/80, 10h00.
1573/80—JANSE VAN RENSBURG, Abraham Johannes. 20/7/80. Bloemfontein, 5/9/80, 10h00.
1645/80—ERASMUS, Thomas Frederik, boer en spekulant. 30/7/80. Potchefstroom, 3/9/80, 10h00.
1647/80—RAS, Andries, swaksinnige pasiënt. 20/7/80. Hoopstad, 3/9/80, 10h00.
1653/80—WAHLSTRAND, Marthinus Johannes. 31/7/80, Heilbron, 3/9/80, 11h00.
1659/80—BRANKEN, [illegible]n Henry, afgetrede staatsamptenaar. 31/7/80. Frankfort, [illegible]/9/80, 10h00.
1572/80 — PRETORIUS, Magdalena Adriana, gepensioeneerde. 22/7/80. Vrede, 10/9/80, 10h00.
1530/80—DE WET, Elizabeth Maria, gebore Coetzer, huisvrou. 16/7/80. Jacobsdal, 10/9/80, 10h00.

OOS-KAAP • EASTERN CAPE

2092/80—VAN DER VYVER, Wilhelm, afgetrede boer, 28/7/80. Humansdorp, 3/9/80, 10h00.
1558/80—MASSON, Bowles Bert, drukker. 11/6/80. Graaff-Reinet, 5/9/80, 09h30.
1945/80—DISSEL, Johanna Hendrietta (Henrieta), huisvrou. 13/3/80. Uitenhage, 3/9/80, 10h00.
1921/80—POSTHUMUS, Reynier Johannes, ketelopposser. 19/7/80. Port Elizabeth, 4/9/80, 14h00.
3305/77—ROWAN, Robert Lee, horse-trainer. 19/11/77. Pretoria, 4/9/80, 09h00.
1950/80—VAN ANTWERPEN, Susara Sophia, seamstress. 22/7/80. Grahamstown, 5/9/80, 10h00.
1845/80—COETZEE, Hendrik Stephanus Petrus, padkonstruksievoorman. 5/7/80. Bedford, 5/9/80, 10h00.
2105/80—WRIGHT, Henry Barten, pensioner. 5/7/80. King William's Town, 2/9/80, 10h00.

Vorm/Form J 295

KURATORS EN VOOGDE: MEESTERS SE KENNISGEWINGS

Ingevolge artikel 75 van Wet 66 van 1965 word hierby kennis gegee van die aanstelling van persone as kurators of voogde deur Meesters, of van die beëindiging van aanstellings in sodanige hoedanighede.

Die inligting word verstrek in die volgorde: Nommer van saak; persoon onder kuratele, of minderjarige, en adres; naam en adres van kurator of voog; of aanstelling of beëindiging daarvan, en datum; Meester van die Hooggeregshof.

CURATORS AND TUTORS: MASTERS' NOTICES

In terms of section 75 of Act 66 of 1965 notice is hereby given of appointments of persons as curators or tutors by Masters, or of their having ceased in their respective capacity.

The information is given in the following order: Number of matter; person under curatorship, or minor, and address; name and address of curator or tutor; whether appointment or cease in capacity, and date; Master of the Supreme Court.

KAAP • CAPE

1642/78—THEUNISSEN, Pieter Willem Le Roux, Klipvlei, Philadelphia. Curator/Tutor, Pieter Jacobus Malan, P.O. Box 13, Durbanville. Appointment, 12/4/78. Cape Town.

ISAACS, Joseph, a minor, born on 19/10/60, 459 Halt Road, Elsie's River. Tutor, Adrian Francis Watermeyer, c/o Pincus Matz & Feinberg, 135 Main Road, Claremont. Appointed, 29/8/80. Cape Town.

3120/80—GOODWIN, Olive Hilda Maud, Fairacre, 16 Banksia Road, Rondebosch, 7700. Curator/Tutor, James Murray Wilson, Fifth Floor, Broadway Industries Buildings, corner of Hertzog Boulevard and Heerengracht, Cape Town, 8001. Appointment, 6/8/80. Cape Town.

NATAL

4587/79—FLEET, Peter Donald. Curator, William Oliver Neville James, c/o Messrs James Becker & Power, P.O. Box 32, Pietermaritzburg, 3200. Appointment, 30/7/80, Pietermaritzburg.

4470/75—HOSKING, Natalie May, 2 Tegwaan Road, Ramsgate, Natal. Curator, Harold Graham Gallow, c/o Syfrets Trust and Executor Co. S.A. Ltd, P.O. Box 135, Durban, Cease, 1/7/80. Pietermaritzburg.

OOS-KAAP • EASTERN CAPE

CONROY, Raymond Geddes, Second Floor, Allied Buildings, 7 Buxton Street, East London. Tutor, Leon Clive Fleming, c/o South African Police, Alice. Cease, 18/8/80. Grahamstown.

Vorm/Form J 193

KENNISGEWING AAN KREDITEURE IN BESTORWE BOEDELS

Alle persone wat vorderings het teen die boedels hieronder vermeld, word hierby versoek om hul vorderings by die betrokke eksekuteurs en binne 'n tydperk van 30 dae (of andersins soos aangedui) gereken vanaf die datum van publikasie hiervan in te lewer. Die inligting word verstrek in die volgorde: Boedelnommer, familienaam en voorname, geboortedatum, persoonsnommer, laaste adres, datum oorlede; nagelate eggenoot(note) se name, familienaam, geboortedatum en persoonsnommer; naam en adres van eksekuteurs of gemagtigde agent, tydperk toegelaat vir lewering van vorderings *indien anders as* 30 *dae*.

NOTICE TO CREDITORS IN DECEASED ESTATES

All persons having claims against the estates mentioned below are hereby called upon to lodge their claims with the executors concerned, within 30 days (or otherwise as indicated) calculated from the date of publication hereof. The information is given in the following order: Estate number, surname and christian names, date of birth, identity number, last address, date of death; surviving spouse's names, surname, date of birth and identity number; name and address of executor or authorised agent, period allowed for lodgement of claims *if other than* 30 *days*.

KAAP • CAPE

5141/80—THERON, Susanna Louisa Johanna, 3/1/01, 010 105003004, Huis Pam Brink, Myburghstraat, Strand, 22/7/80. Standardtrust Bpk., Posbus 54, Kaapstad.

4648/80—WOLPERT, Morris, 16/6/05, 0506165003001, 607 Kew Gardens, Regent Road, Sea Point, 11/7/80. Standardtrust Ltd, P.O. Box 54, Cap Town.

4909/80—DU TOIT, Josias Jacobus (Jakobus) Francois, 13/10/05, 0510135008009, Re-Uniestraat 20, Bredasdorp, 15/7/80, Martha Susanna du Toit. Boland Bank Bpk., Posbus 18, Bredasdorp.

3263/80—DOURIES, Frans, 19/12/08, 014468079K, 11 15th Street, Bishop Lavis, 26/5/80; Elizabeth Douries, born Snell, -/-/03, 007740660K. Claude W. Ipser, N.B.S. Buildings, 5 Church Street, Bellville.

5104/80—DONNAN, Sarah Grant 12/4/1897, 9704120005 002, Leisure, Ripelby Road, Claremont 17/7/80. Standardtrust Ltd, P.O. nox 54, Cape Town.

4774/80—SKEA, Mabel, 22/11/1888, 404109960W, Mothwa Haven, Booysen Street, Eloffsdal, Pretoria, 14/7/80 Fairbridge Arderne & Lawton, P.O. Box 536, Cape Town.

4980/80/ASRIH—DIRCKS, Adolf Ernst, 5/2/1895, 950205 5008003, Baharini, 65 Sands Road, Wilderness, 22/7/80. M. Belchers, P.O. Box 391, East London

3926/80—HENKEMAN, Martha Magdalene, 1/10/23, 022 510613, Diocesan College, Rondebosch, 2/6/80. Findlay & Tait, 30 Hout Street, Cape Town.

MARX, Petrus Daniel, 23/8/03, 0308235008007, Ons Huis, Montagustraat, Mosselbaai, 25/7/80. Standardtrust Bpk., Posbus 329, Port Elizabeth

4991/80—LATEGAN, Cornelius Johannes, 17/5/08, 080517 5012008, Betjiesfontein, Redelinghuys, 13/7/80 Anderson, Nel & Kie., Posbus 41, Piketberg.

4824/80—MINDLIN, David, 5/5/1896, 354842342W, Highlands House, 234 Upper Buitenkant Street, Cape Town, 20/7/80. Frank, Bernadt & Joffe, 13 Hout Street, Cape Town.

4899/80—PRETORIUS, Stephanus Johannes, 8/3/06, 06030 85002005, Soeteweide 12, Stellenbosch, 12/7/80. Boland Bank Bpk., Posbus 13, Stellenbosch.

4897/80—NEWMAN, Hendrik Stephanus, 29/8/80, 118868 630K, Sonneblomstraat 17, Idasvallei, Stellenbosch, 11/7/80, Leah Newman. Boland Bank Bpk., Posbus 13, Stellenbosch.

652/80—ISAACS, Jacobus, 23/12/26, 2612235079019, Dewetstraat 41, Bellville, 1/1/80; Maud Bantam Isaacs. Bornman & Hayward, Posbus 393, Bellville.

4975/80—BOUWER, Catherina Elizabeth, gebore Theron, 15/3/1899, 9903150004006, Ametis 420, Gordonsbaaiweg, Strand, 10/7/80. Volkskas Bpk., Posbus 3981, Kaapstad.

5009/80—TALJAARD, Johannes Jochemus, 18/3/189., 960 3185002005, Proteawoonstelle 2, Silvastraat, Ysterplaat, 2/6/80. Volkskas Bpk., Posbus 3981, Kaapstad

4995/80—PIETERSEN, Jan George, 11/7/22, 220305000 9008, Amystraat 14, Saldanha, 18/6/80; Wilhelmina Alwina Fredrika Pietersen, 11/7/22, 2203050009008 Volkskas Bpk., Posbus 3981, Kaapstad.

3720/80—TERBLANCHE, Jakobus Lodewikus, 26/9/08, 080 9265024004, Grootsorgfontein, distrik Mosselbaai, 24/5/80. Miller Terblanche & Zietsman, Posbus 83, Mosselbaai.

4928/80—BIANCO, Albertina Magdalena, 24/5/25, Posbus 587, Walvisbaai, 5/7/80. Volkskas Bpk., Posbus 3981, Kaapstad

4294/80—VERWEY, Wallace Louis, 2/1/11, 1101025011 003, Wehmeyerstraat, Willowmore, 23/6/80; Elizabeth Verwey, gebore Williams, 30/6/13, 1306300005006. De Jager & Vennote, Posbus 111, Willowmore.

4862/80—VISAGIE, Petrus Hermanus Stephanus, 26/3/02, 0203265003009, Nuwestraat 9, Prins Albert, 12/6/80; Carolina Wilhelmina Christina Visagie, gebore Koorts, 25/4/10, 1004250009009 Volkskas Bpk., Posbus 3981, Kaapstad.

4277/80—KELLERMAN, Hendrik Andries Gideon, 20/7/06, 0607205011002, Wolfkloof, Porterville, 21/6/80; Aletta Johanna Maria Kellerman, gebore Wessels, 21/7/18, 180721 0047004. Boland Bank Bpk., Posbus 51, Porterville.

3389/80—VAN REENEN, Johanna Magdalena, 2/11/06, 086592306W, Tuishuis, Baron Vanreedestraat 65, Oudtshoorn, 16/5/80; Jacob Johannes van Reenen, 15/5/1899, 9905155014 005. P. D. van Reenen, Posbus 10, Oudtshoorn.

3127/80—BRETT, Flora Fanny, 19/8/05, 176 De Villiers Street, Vrijzee, Goodwood, 8/4/80. Bill Tolken Bresler & Brynard, 502 Saambou Buildings, Kruskal Avenue, Bellville.

4728/80—CONYN, Thomas, 4/9/03, 0309045022105, 54 Grey Street, Knysna, 2/7/80. Standardtrust Ltd, P.O. Box 329, Port Elizabeth

1068/80—BROUGH, Frans Willem, 7/11/13, 1311075008 003, Goedehoop, Middelburg, 14/1/80; Johanna Frederika Aletta Brough, gebore Dissel, 7/5/21, 2105070011007. Wynand Prinsloo & Badenhorst, Posbus 810, Middelburg.

4816/80—LINGENFELDER, Maatje Magdalena, gebore Coetzee, 2/10/13, 1310020004000, Welgelegenwoonstelle 2, Kusweg, Strand, 3/7/80. Volkskas Bpk., Posbus 3981, Kaapstad.

3779/80—GOLDEN, Stephen William, 25/11/41, 960014 775, Fairview, 13th Avenue, Strandfontein Road, Ottery, 25/5/80; Patricia Jean Nanette Golden, 18/4/51, 768017179. Morkel & De Villiers, P.O. Box 43, Somerset West.

3511/80—HOARE, Gerald Baxter Ness, 13/8/06, 06081350 30104, 9 Wraysbury Gardens, Claremont, 20/5/80; Arthur Young & Company, P.O. Box 4807, Cape Town.

1536/80—BROWN, George Ralph, 145299595, Hoekstraat 9, Wellington, 18/12/79. Louw & Schreve, Posbus 4, Wellington

2911/80—SAMPSON, Jeanette Wilhelmina Iris, formerly De Wet, born Greeff, 11/9/12, 1209110010002, widow, 2 Checkers Flats, Drama Street, Somerset West 28/4/80. J. C. Louw, Du Plessis & Partners, 5 Church Street, Somerset West.

1093/80—SILVER, Delen Lily, 15/4/05, 0504150027002, Highlands House, 234 Upper Buitenkant Street, Cape Town, 17/2/80. Levin, Rosenberg, Blumberg & Joffe, P.O. Box 9219, Johannesburg.

4165/80—HOVING, Herman, 14/10/06, 0610145006009, Graaffstraat 24, Villiersdorp, 18/6/80. Boland Bank Bpk., Posbus 10, Villiersdorp.

4523/80—MALAN, Jeremia Weideman, 6/2/14, 14020650 42001, 101 Security House, Main Road, Strand, 1/7/80. Morkel & De Villiers, P.O. Box 43, Somerset West.

4974/80—BURGER, Theunis Johannes, 16/8/19, 190816500 3008, Kerkstraat 17, Porterville, 21/7/80; Cornelia Gertruida Burger, gebore Van Zyl, 29/6/30. Boland Bank Bpk., Posbus 51, Porterville.

5071/80—CRONJE, Johannes Adolf, 13/3/12, 1203135039 005, Hoofweg-Oos 130, Stilbaai, 27/6/80. Boland Bank Bpk., Posbus 12, Riversdal.

2758/80/ASR/H—BROWN, Zachariah, 15/8/14, 012442800 K, Porterstraat 12, Beaufort-Wes, 28/4/80. Gird & Dercksen, Posbus 6, Beaufort-Wes.

MONK, Cecil Robert, 9/6/01, 0106095012006, Maanskyn, P.O. Harkerville, 20/7/80. Standardtrust Ltd, P.O. Box 329, Port Elizabeth.

4990/80—KOCH, Carel Daniel, 15/10/28, 3001050040000, Kerkstraat 110, Oudtshoorn, 7/6/80. Volkskas Bpk., Posbus 3981, Kaapstad.

4599/80—DE WET, Jacobus Macheyne, 28/10/1898, 981028 5015007, Humewood Residential Hotel, Hillweg, Drie-Ankerbaai, 26/6/80; Muriel Mitford de Wet, gebore Mitford-Louw, 19/1/03. R. H. Meyeridricks, Bestuurder, Santamtrust Bpk., Posbus 4333, Kaapstad.

4861/80—STRYDOM, Nicolaas Conraad, 29/7/26, 260729 5062004, Haywoodweg 42, Crawford, 6/7/80; Stella Strydom, gebore Prehn, 022146365. R. H. Meyeridricks, Bestuurder, Santamtrust Bpk., Posbus 4333, Kaapstad.

5014/80—ABRAHAMS, Abraham, 14/7/13, 1307145036016, Edina, Otteryweg 48, Wynberg, 15/7/80. R. H. Meyridricks, Bestuurder, Santamtrust Bpk., Posbus 4333, Kaapstad.

5035/80—STEADMAN, Eileen, gebore Beecroft, 30/4/12, 1204300037006, Adam Taslaan 15, Bothasig, 17/7/80; Albert Victor Steadman, 0909305027007. R. H. Meyeridricks, Bestuurder, Santamtrust Bpk., Posbus 4333, Kaapstad.

4586/80—BURGER, Willem Gideon, 29/7/16, Bedfordstraat 5, Observatory, 1/7/80. R. H. Meyeridricks, Bestuurder, Santamtrust Bpk., Posbus 4333, Kaapstad.

4744/80—WACHE, Hans-Helmut (Hans-Helmuth), 5/1/53, 5301055049008, Posbus 618, Walvisbaai, 23/6/80. R. H. Meyeridricks, Bestuurder, Santamtrust Bpk., Posbus 4333, Kaapstad.

4518/80—ISMAIL, Ebrahim, 11/12/32, 3212115011015, Ebgow, Bornite Road, Penlyn Estate, Athlone, 6/7/80; Gown Ismail, born Rhoda, 15/7/31, 3107150010023. Barclays National Bank Ltd, P.O. Box 512, Cape Town.

4773/80—ROWE, Johanna Franziska Charlotte, born Stowien, 29/12/06, Saltwell, 22 Bertrand Road, Green Point, 14/7/80 Barclays National Bank Ltd, P.O. Box 512, Cape Town.

4582/80—MILNE, Joyce Phyllis, born Murphy, 28/1/18, 1801270021009, 1 Osmarie, Brooke Street, Claremont, 7/7/80; John Doyle Milne, 12/11/16, 1611125037005. Barclays National Bank Ltd, P.O. Box 512, Cape Town.

5089/80—SCHULTZ, August Heinrich Christian, 15/8/10, 1008155017009, 60 Cook Street, Vasco, 23/7/80; Christina Johanna Susana Schultz, born Bothma, 5/12/04. Barclays National Bank Ltd, P.O. Box 512, Cape Town.

4672/80—RIGNEY, Florence Catherine, born Hudson, 16/7/1896, 022224036, Zerilda Steyn Memorial Home for the Aged, Forest Drive, Pinelands, 24/6/80. Barclays National Bank Ltd, P.O. Box 512, Cape Town.

4794/80—DOHERTY, Quinton Joseph, 19/7/11, 022766905, 127 Joubert Street, Vasco, 16/7/80. Barclays National Bank Ltd, P.O. Box 512, Cape Town.

4143/80—STEYTLER, Charles David Henry, 19/5/1896, 9605195004004, Huis de Kuilen, Skoolstraat, Kuilsrivier, 24/6/80. Barclays National Bank Ltd, P.O. Box 512, Cape Town.

3947/80—THOMAS, George Whitley, 29/3/15, 1503295026 001, 3-5 Herschel Road, Observatory, 22/6/80. Barclays National Bank Ltd, P.O. Box 512, Cape Town.

3417/80—MUSSEL, Arthur George, 26/4/17, 164 Rosemead Avenue, Kenilworth, 14/4/80. Frank, Bernadt & Joffe, Third Floor, St George's Centre, 13 Hout Street, Cape Town.

4359/80—SEXTON, Raphael Lane, 19/1/17, 1701095009009, 81 St George's Street, Cape Town, 26/6/80; Edith Dorothy Sexton, born Johnson, 2/2/15, [illegible], Barclays National Bank Ltd, P.O. Box 512, Cape Town.

2540/80—STOTBERG, Andrew Benjamin, 2/2/06, 0602025 004006, 16 Meyer Street, Plumstead, 20/4/80, Elizabeth Catharina Stotberg. Barclays National Bank Ltd, P.O. Box 512, Cape Town.

4095/80—GREEFF, Frederick Johannes, 5/7/21, 21070550 18007, Maraistraat 5, Kuilsrivier, 14/6/80; Martha Elizabeth Greeff, gebore Van Eeden, 30/6/18, 1808300050007. Santamtrust Bpk., Posbus 680, Bellville.

4887/80—FABRICIUS, Gert Cornelius, 14/11/15, 1511145 019001, Keeromstraat 3, Barrydale, 21/5/80; Hendrina Magrietha, gebore Le Grange, 28/8/17, 1708280063006, Volkskas Bpk., Posbus 3981, Kaapstad.

5026/80—PRETORIUS, Sarah, gebore Smit, 16/3/06, 060 3160022001, Spencerstraat 18, Maitland, 6/7/80. Volkskas Bpk., Posbus 3981, Kaapstad.

4194/80—KLAASEN, Daniel, 27/5/48, 4805275109012, Magnoliawoonstelle 24, Paarl-Oos, 26/6/80; Maria Magdalena Klaasen, gebore Karelse, Boland Bank Bpk., Posbus 236, Paarl.

4942/80—PENTZ, Cornelius Adriaanus, 4/12/07, 022632 012, Laer Wrenshweg 40, Observatory, 11/7/80. Standardtrust Bpk., Posbus 54, Kaapstad.

4700/80—MOAG, Maria Elizabeth, 14/2/03, 0302140001 009, 16 King Fisherwalk, Pinelands, 16/6/80; James Steward Moag, 26/1/1899, 9901265002006. Standardtrust Bpk., Posbus 54, Kaapstad.

4948/80—JOUBERT, Gideon Daniel, 16/7/14, 1407165015 005, Hofstraat 14, Montagu, 17/7/80; Judith Johanna Maria Joubert, gebore Rossouw, 24/2/23. Boland Bank Bpk., Posbus 13, Montagu.

4549/80—SMIT, Andrew, 16/9/1896, 022561398W, Balfourstraat 12, Woodstock, 1/7/80. Santamtrust Bpk., Posbus 680, Bellville.

3995/80—LOMBARD, Pieter Andreas, 5/3/53, 5303055108 008, Freesiaweg 6, Tygerdal, Goodwood, 8/6/80; Susanna Wilhelmina Lombard, 5509020137001. Santamtrust Bpk., Posbus 680, Bellville.

4878/80—REINECKE, Johannes Jurie, 26/10/13, 13102650 11009, Voortrekkerstraat 10, Knysna, 30/6/80; Elizabeth Naomi Reinecke, gebore Gerber, 31/1/19, 1901310004005. Santamtrust Bpk., Posbus 680, Bellville.

5007/80—SCHREUDER, Josuas Hermias, 10/10/47, 47101 05009005, McGregordstraat 153, Maitland, 13/7/80; June Doreen Schreuder, 101216919W. Santamtrust Bpk., Posbus 680, Bellville.

1652/80—COHEN, Abraham (Lolly), 11/11/06, 022299244, Valkenberg Hospital, Observatory, 10/3/80. Sonnenberg Hoffmann & Galombik, 54 Shortmarket Street, Cape Town.

4979/80—DROEGE, Margaretha Katherine, 13/3/1899, 211 469206W, Zerilda Steyn Memorial Home, Forest Drive, Pinelands, 25/7/80. Harold Gie & Broadhead, 8 Darling Street, Cape Town.

4530/80—HARDY, Maria Petronella Sophia, 1/3/07, 07030 10014008, Rainbow Cottage, Newlands, 2/7/80. Fairbridge Arderne & Lawton, Fourth Floor, Main Tower, Cape Town Centre, Cape Town.

3924/80—DAWSON, Annie Maria, born Middleway, 1/3/04, 022134721, 19 General Street, Athlone, 23/5/80. Roup, Wacks & Kaminer, Matador Centre, 62 Strand Street, Cape Town.

1654/80—GOLD, Michael Harry, 5/2/30, 3002055026002, 88 Milner Road, Rondebosch, 11/2/80. L. Rubin & Company, P.O. Box 81, Claremont.

4222/80—HARRIS, Lionel Sidney, 02222472816, 30 Sunnybrooke Way, Elfindale, Heathfield, 11/6/80; Welhelmina Caroline Harris, born Hector. M. C. Davids & Co., Ledger House, Aden Avenue, Athlone.

4998/80—PRETORIUS, Philippus Petrus, 2101235025008, Rhodes Memorial Tea Room, Rondebosch, 10/7/80. David Asherson, Epstein & Epstein, P.O. Box 45, Wynberg.

4678/80—NOORDIEN, Imam Achmat, 0705035034028, 43 Taurus Road, Surrey Estate, Athlone. S. M. Kessler Lazerus & Borok, 63 Voortrekker Road, Goodwood.

7646/79—ELY, Ismail, Grassy Park. Pincus, Matz & Feinberg, 135 Main Road, Claremont.

4764/80—OSPOVAT, Jenny, 25/7/05, 0507250039009, 21 Virginia Avenue, Gardens, Cape Town, 19/7/80. Epstein Bloch Spektor, P.O. Box 3798, Cape Town.

2888/80—BEATON, Victor Jacobus, 25/9/24, 2409255059 017, widower, 17 Porath Road, Hanover Park, 6/5/80. Race & Wood, Reserve Bank Buildings, 30 Hout Street, Cape Town.

864/80—BLOWS, Arthur Charles, 30/11/03, 022840000W, Zerilda Steyn Home, Forest Drive, Pinelands, 17/1/80. Bloomberg & Co., Sixth and Seventh Floor, Uniswa House, 56 Shortmarket Street, Cape Town.

5034/80—SMITH, Peter Cooper, 16/9/28, 2809165079007, 51 Franfort Street, Parow, 26/7/80; Mavis Doreen Smith, 19/8/28, 2808190049001. Esau Shapiro & Segall, 145 Main Road, Claremont.

4616/80—DAVIES, George, 9/9/18, 022584401, 8 Albert Road, Lansdowne, 18/7/80. Esau Shapiro & Segall, 145 Main Road, Claremont.

4925/78/5D—DART, Heyman West, 8/7/07, 0707085014009, 18 Auriann House, 9 Hope Street, Cape Town, 10/8/78. R. R. Dart, 18 Kwarts Street, Stellenberg.

GORE, Richard Norman, 0703245010003, 36 Botes Street, Parkdene, Boksburg, 30/6/80. Nel & Malan, First Floor, The Link, Claremont, Cape Town.

1629/80—FITZ, Gert, 20/4/56, 564205183019, 11de Laan 105b, Elsiesrivier, 3/3/80; Magdeline Magaret Blom, 29/12/59, Swanepoel Uys & Van Reenen, Tygerbergsentrum 301, Voortrekkerweg, Bellville.

4716/80—TRAIL, Cecille May, born Freeman, 29/5/06, 022329156, widow, Conradie Hospital, Pinelands, Cape Town, 14/7/80. Hayden Elmes & Elmes, P.O. Box 11072, Cape Town.

4704/80—SENNETT, Harry, 9/4/08, 0804095031006, 22 Conway Court, Victoria Road, Bantry Bay, Cape Town, 13/7/80. Klosser Saunders & Oldroyd, 52 St George's Street, Cape Town.

1103/80—HIGGO, Martha Catharina, 23/2/34, 3402230041 001, Highfieldstraat 4, Wellington, 5/2/80; Stefanus Johannes Christiaan Higgo, 31/1/31, 3110315050009. Purdon Gilmour, Dorpstraat 137, Stellenbosch.

3377/80—McKENZIE, Edith, 18/2/03, 022790396, 3 Maindy Road, Gleemoor, Athlone, 22/1/64. Coulter & Company, 40 Burg Street, Cape Town.

4915/80—ASHTON, Maxwell Leon, 5/1/1894, 9401055002 001, Greenways, Torquay Avenue, Claremont, 30/7/80. Sonnenberg Hoffmann & Galombik, 54 Shortmarket Street, Cape Town.

189/80—KARJEKAR, Mohamed Casim Mohamed Salie, -/-/16, 49 Doreen Road, Rylands Estate, Athlone, 5/12/79. Syfret Godlonton-Fuller Moore Inc., P.O. Box 110, Claremont.

4187/80—DE BEER, Johannes Henderson, 24/8/22, 2208 245053001, Betastraat 5, Bellville, 27/6/80; Cornelia Johanna Francina de Beer. Syfrets Trustmaatskappy Bpk., Waalstraat 24, Kaapstad.

4707/80—JENKINSON, Ellen Eileen, 14/10/18, 18101400 22006, 68 Mybrugh Road, Diep River, 18/7/80. Storm Langdon Reilly, Colonial Mutual Buildings, Adderley Street, Cape Town.

665/80—COSTOPOULOS, Helen, born Tatalias, 31/3/25, 17 Loughoorough Road, Hathern, Leicester, England, 27/4/78. Reillys, P.O. Box 3126, Cape Town.

4789/80/ASR/H—BOUD, Henry Frederick, 27/10/08, 081 0275008003, Waterford, 13 Blinkwater Road, Camps Bay, 20/7/80. Syfrets Trust Company Ltd, 24 Wale Street, Cape Town.

4790/80—CHASEN, Jack Louis, 28/1/03, 0301285009009, 403 Portman Place, Fir Avenue, Bantry Bay, 21/7/80. Syfrets Trust Company Ltd, 24 Wale Street, Cape Town.

4074/80—HAGUE, Jessie Maisie, 31/1/02, 0201310009000, Ladies Christian Home, 20 Vrede Street, Cape Town, 22/6/80. Syfrets Trust Company Ltd, 24 Wale Street, Cape Town.

4526/80—ROSS, Margaret Louise Constance, 5/1/1896, 980 1050009002, Lady Jean Nursing Home, 33 Honiton Road, Plumstead, 10/7/80. Syfrets Trust Company Ltd, 24 Wale Street, Cape Town.

3873/80—ROEPER-BOSCH, Jeanne, born Aronson, 7/11/1899, 9911070015, Booth Memorial Hospital, Gardens, Cape Town, 15/6/80. Syfrets Trust Company Ltd, 24 Wale Street, Cape Town.

3879/80—EDWARDS, Irene Maud Louisa, 23/8/07, 0708 230043000, 601 Pentland Heights, Wynberg, 18/6/80; Victor Roland Edwards. Syfrets Trust Company Ltd, 24 Wale Street, Cape Town.

3671/80—ABELGAS, Geronicio, 1208525049015, 73 Oasis Road, Hazendal, Athlone. S. J. Petersen, P.O. Box 79, Athlone.

3844/80—JACOB, Irma Valerie, born Langmann, 29/5/37, 3705290053009, 22 Crassula Way, Pinelands, 17/3/80; Helmut Jacob, 20/2/36, 3602205047103 The Board of Executors, 4 Wale Street, Cape Town.

4183/80—PEARCE, Sarah Jane, formerly Smit, born Dodds, 22/8/25, Ndola, Zambia, 22/4/79. The Board of Executors, 4 Wale Street, Cape Town.

4709/80—RUFFLES, Charles, 10/4/1888, 12 Noordelike Laan, Devils Peak, 20/6/80; Helena Barendina Ruffles, born Smit, 13/4/02, 0202070015005. The Board of Executors, 4 Wale Street, Cape Town.

4083/80—PRICE, Patti, 18/12/1895, 9512180004009, Bosky Dell B, 6 Grant Avenue, Simonstown, 1/6/80. The Board of Executors, 4 Wale Street, Cape Town.

4951/80—MILLAR, Isobel May, born Dods, 4/5/04, 022 722338, Elizabeth Nursing Home, Belmont Avenue, Oranjezicht, 15/7/80. The Board of Executors, 4 Wale Street, Cape Town.

5106/80—FISHER, Jeanetta Elizabeth (Janet Elizabeth Harriet), 23/12/05, 022205364, 9 Upper Bloem Street, Cape Town, 1/8/80. The Board of Executors, 4 Wale Street, Cape Town.

5134/80—SMITH, Daniël Jacobus Louw, 1/3/07, 070301 5004004, Vaalkrans, Lutzville, 4/6/80. Volkskas Bpk., Posbus 3281, Kaapstad.

5139/80—VLOK, Martha Maria Susanna, 14/5/1900, 000 5140002006, Uitsig, M. E. Rothmannstraat, Parow-Noord, 30/7/80. Standardtrust, Posbus 54, Kaapstad.

4396/80—THERON, Johanna Elizabeth, 1305260033008, Arixomaweg 21, Thornton, 1/7/80; Cornelius Marthinus Theron. Pieters, Truter & Hurter, Franse Bankgebou 413, Kerkplein 4, Kaapstad.

4726/80—BARNARD, Hendrik Frederick Petrus, 15/2/1896, 9502155003003, Russelhuis 2, Langstraat, Knysna, 27/6/80; Johanna Jacoba Barnard, voorheen Barnard, gebore Van Huyssteen, 20/6/17, 1706200003003. Standardtrust Bpk., Posbus 329, Port Elizabeth.

3611/80—PRICE, Phyllis Muriel, 29/5/1889, 096744111, 1 Dorp Street, Paarl, 25/5/80. S. G. Hoffman & Van Tonder, 31 Lady Grey Street, Paarl.

28/80—SCHULTZE, Spencer, 12/6/38, 331437204, 1a Gordonia Street, Gordon's Bay, 27/12/79; Elsie Wilhelmina Schultze, 15/4/48, 4804150088004. Webber, Wentzel & Co., P.O. Box 61771, Marshalltown.

4561/80—FRANS, Samuel Edward, 15/7/17, 1707155068017, 93 St John's Road, Wetton, 10/6/80; Pauline Catherine Frans, born Kühn. Standardtrust Ltd, P.O. Box 54, Cape Town.

5103/80—CLARKE, David Daniel, 9/3/15, 1503095026003, P.O. Box 13, Weltevreden Road, Phillippi, 18/7/80; Ivy Clarke, 8/6/17, 022828218W. Standardtrust Ltd, P.O. Box 54, Cape Town.

5129/80—PEARSON, William Logan, 8/9/12, 1209085029 003, Gleniffer, Beta Road, Bakoven, 30/6/80; Audrey Ethel Pearson. Standardtrust Ltd, P.O. Box 54, Cape Town.

4547/80—VAN SOELEN, Eugene Cecil, 23/1/1899, 990123 5005006, 11 North Side, Somerset Oaks, Somerset-Wes, 7/7/80; Elizabeth Susanna van Soelen, gebore Human, 26/7/02, 0207260012001. Barclays-Nasionale Bank Bpk., Posbus 4, Kaapstad.

4527/80—SCHOLTZ, Elizabeth Johanna, gebore De Klerk, 25/7/15, 1507250053009, Brandstraat 110, Strand, 5/7/80. Barclays-Nasionale Bank Bpk., Posbus 4, Kaapstad.

4938/80—MITCHLEY, Susanna Sophia, gebore Eitner, 18/5/1893, 244643W, Sederhof, Tehuis vir Bejaardes, Clanwilliam, 30/6/80. Barclays-Nasionale Bank Bpk., Posbus 4, Kaapstad.

4831/80—SNYMAN, Jacobus Petrus, 3/10/13, 1310035006 008, Maitlandstraat 33, Touwsrivier, 19/7/80. Barclays-Nasionale Bank Bpk., Posbus 4, Kaapstad.

4693/80—CLARK, John Frederick, 13/11/06, 0611135018 004, 7 Margaret Avenue, Pinelands, 17/7/80. J. N. Clark, P.O. Box 864, Bellville.

4519/80—JORDAAN, Abraham Petrus, 2/9/10, 100902501 7005, Jan du Toitsrivier, Goudiniweg, Worcester, 5/7/80. J. E. Krige & Seuns, Baringstraat 33, Worcester.

3974/80—JOUBERT, Gideon Francois, 30/4/10, 100420501 6000, Waenhuiskrans, Bredasdorp, 17/6/80; Henrietta Joubert (Henriette Metelerkamp Joubert), gebore Spamer, 21/3/18. F. J. Spamer, Posbus 195, Bredasdorp.

4631/80—MULLER, Hendrik Lodewyk, 24/1/11, 11012450 01008, Hoofstraat, Brandvlei, 7/7/80. E. v. d. M. Louw, Posbus 56, Loeriesfontein.

4531/80—STAPLETON-COTTON, Violet Adelaide Blanche, 1/1/1886, 022722510W, Ellerslie, Talana Road, Claremont, 12/5/74. Standardtrust Ltd, P.O. Box 933, Johannesburg.

2962/80—VAN WYK, Jacobus Petrus, 29/5/28, 250529502 2008, 12 Lavallestraat, Shirley Park, Bellville, 6/4/80. Ernst Strauss & Haasbroek, Posbus 2453, Kaapstad.

TRANSVAAL

3109/80—BOOYSEN, Johannes Hendrik, 16/7/56, 560716 5001006, S.A. Polisiewoonstelle 21, Kerkstraat, Krugersdorp, 1/3/80; Adriana Elizabeth Booysen, 20/8/55, 5508200074000. Phillips & Osmond, Posbus 168, Krugersdorp.

7229/80—SWEETING, Christine Taylor, 17/5/1895, Tinie Vorstertehuis, Dunnottar, District of Nigel, 27/4/80. Bennett McNaughton, P.O. Box 668, Springs.

BROLE, James van Heerden, 22/8/08, 0808220023007, 40 Eventide Old Age Home, Duncanville, Vereeniging, 3/7/80. T. P. Connaughton, P.O. Box 319, Vereeniging.

8530/80—PUTTER, Hendrik Jacobus, 29/5/1958, 580529 5006008, Welverdiend, 24/5/80. Haasbroek & Boezaart, Posbus 2205, Pretoria.

5671/80—COETZEE, Andries Stephanus Cornelius, 30/3/1898, 331483903W, Huis H. J. Piek, Middelstraat 153, Nieu Muckleneuk, 11/5/80. Kellerman Nel & Bruni, Posbus 466, Pretoria.

1680/80—LAMBRECHT, Petrus Cornelius Combrinck, 13/8/60, 6008135039003, Staatsopleidingkollege vir mynwerkers, Stilfontein, 10/8/79. Jordaan & Van Tonder, Posbus 27, Kuruman.

8837/80—SUNKEL, Elisabeth Charlotte, gebore Bothfeld, 2/3/04, 0403020007007, weduwee, Huis Immergroen, Piet Retief, 27/6/80. P. Vorster & Kie., Posbus 50, Piet Retief.

1685/80—MOTA, Meshack Mogampane, 138742560, 3658 Zone 13, Sebokeng, 2/11/79. McLoughlin Porter & Venter, P.O. Box 931, Vereeniging.

810/80—PETERSEN, Anthony David, 22/9/53, 530922 5077007, 12 Creswell Street, Florida, District of Roodepoort, 12/6/80. J. B. Hugo & Cronje, P.O. Box 115, Krugersdorp.

9504/80—DE KOCK, Joseph William, 27/10/02, 02102 75006000, Karinlaan 81, Doringkloof, Pretoria, 21/7/80. Boland Bank Bpk., Posbus 950, Pretoria.

13280/79—PRETORIUS, Nicolene, 4/5/56, 560504007008, 22 Bronkhorst Street, Phalaborwa, 25/10/79; Dirk Andre Pretorius. I. Kramer & Stein, P.O. Box 518, Boksburg.

6829/80—BOSTON, Marjorie, 27/8/21, 2108270036006, 7 Cinderella Deep, ERPM, Boksburg, 22/5/80; William Sydney Boston. I. Kramer & Stein, P.O. Box 518, Boksburg.

4948/80—ESSACK, Mohamed Essop Mohamed, 3/2/14, 0109280000000, 8 Parrot Avenue, Lenasie Extension 1, Johannesburg, 3/4/80. I. Kramer & Stein, P.O. Box 518, Boksburg.

6573/80—VAUGHAN-JONES, Eva Constance, 16/4/1890, 902552758, Old Peoples Home, 112 Woburn Avenue, Benoni, 24/5/80. Gilchrist & Reid, P.O. Box 356, Benoni.

6527/80—DULLMAIER, Francis Veit, 31/8/43, 430831 5050008, Nassaustraat 36, Witpoortjie, Roodepoort, 23/5/80; Martha Elizabeth Sophia Dullmaier. Alberts van Biljon & Schickerling, Posbus 204, Roodepoort.

9159/80—REEKSTING, Catherine Christina, 17/2/06, 308 483302W, 26 Ravenshaw Road, Parkdene, Boksburg, 3/7/80. Malherbe, Rigg & Ranwell, P.O. Box 186, Boksburg.

8138/79 ASR/1/A—JAMES, Martha Maria Cornelia, gebore Ackerman, 21/11/24, 348787910W, Doncasterweg 49, Ferryvale, Nigel, 1/7/79. Mitchell & Brits, Posbus 21, Nigel.

9169/80—STEYN, Mona Estelle, 27/2/45, 4502270063002, Krugerstraat 18, Sannieshof, 3/7/80. Volkskas Bpk., Posbus 970, Klerksdorp.

9065/80—SNYDERS, Lodewyk Frederick, 12/7/38, 380712 5009006, Kilianstraat 21, Coligny, 6/6/80; Maria Alberta Snyders, 2/11/4, 4311020005002. Volkskas Bpk., Posbus 970, Klerksdorp.

7255/80—BRITZ, Frederick Williams, 9/3/41, 4103095088 009, Dudleysirkel 15, Silverfields, Krugersdorp, 22/5/80; Susanna Aletta Cornelia Britz, 10/9/40, 4009100067005. J. B. Hugo & Cronje, Posbus 115, Krugersdorp.

8041/80—PRINSLOO, Johanna Jacoba, 28/8/1899, 990828 0009007, Badfontein, distrik Lydenburg, 15/6/80. Barclays National Bank Ltd, P.O. Box 600, Nelspruit.

8659/80—MARITZ, Frans Ignatius, 14/3/40, 4003145013 009, Rimerstraat 8, Barberton, 1/7/80; Hester Maritz, gebore Van Aswegen, 22/3/47, 4703220078005. Barclays-Nasionale Bank Bpk., Posbus 600, Nelspruit.

4192/80—SAPSFORD, Charles Samuel, 22/9/1891, The Rectory, Main Street, Sabie, 28/2/80. Barclays National Bank Ltd, P.O. Box 600, Nelspruit.

PICKERING, George, 15/6/1898, 9806155006001, Senett Court, Lambton, Germiston, 22/6/80. Wright, Rose-Innes Louw & Wise, P.O. Box 123, Germiston.

9975/79—OPPERMAN, Elizabeth Jacoba, 1/9/14, 427343 153, 79 Fourth Street, Boksburg North, Boksburg, 17/4/79; Johannes Arnoldus Opperman, Hammerschlag-Gishen Inc., P.O. Box 184, Springs.

ROSSOUW, Jan Johannes, 13/5/08, 0805135001008, Pk. Bosmansrus, oor Leeudoringstad, 17/7/80. G. P. Nieuwoudt, Loubser & Cillié, Pretoria.

8654/80—KOEKEMOER, Susanna Maria, 10/6/22, 22061 0007004, Witpoort, Pk. Bosmansrus, oor Leeudoringstad, 4/7/80; Marthinus Wessel Koekemoer, 24/8/21, 2108245020002. André Coetzee, Posbus 12, Wolmaransstad.

7621/80—NORTJE, Edward, 14/7/14, 1407145015000, Privaatsak 2724, Gevonden, Louis Trichardt, 14/6/80; Gerbrecht Cornelia Nortje, 13/8/21, 2108130035008. Leon Klaff, Posbus 25, Louis Trichardt.

4421/80—VAN NIEKERK, Gerhardus Rossouw, 12/4/57, 5704125015000, Olivestraat 75, Van Dykpark, Boksburg. 9/3/80; Wilhelmina Catharina van Niekerk, gebore Niemann, 22/5/65, 6505220039001, Landman & Fourie, Posbus 1095, Newcastle.

5648/80—VILJOEN, Willem Augustinus, 21/9/30, 300921 5020007, Plot 26, Chrissiesfontein, 28/4/80; Elizabeth Margaretha Viljoen, 18/12/46, 4612180089003. Joubert & May, Posbus 35, Tzaneen.

8852/80—DU TOIT, Fredrika Maria, 6/10/14, 141006004 3007, 20ste Laan 733, Rietfontein, 12/6/80; Simon Louis Botha du Toit, 31/8/15, 1508315054008. Die Sentrale Eksekuteurskamer Bpk., Posbus 3626, Pretoria.

8331/80—GATINHO, Antonio Sardinha, 31/12/1897, 971 2315007105, 103 Goldman Street, Florida, District of Roodepoort, 22/6/80; Ellen Gatinho, 30/1/06, 0601300020000. J. Gus Ackerman, P.O. Box 8, Roodepoort.

8620/80—BRONKHORST, Hendrik Frederik Christoffel, 17/10/05, 0510175014008, Gravelotte, distrik Letaba, 22/6/80; Martha Magdalena Jacoba Bronkhorst, 8/5/08, 080 5080005004. Joubert & May, Posbus 35, Tzaneen.

8824/80—VAN ROOYEN, Jan Frederick Rykers, 6/5/10, 1005065010007, Coetzeestraat 16a, Middelburg, 30/6/80; Maria Magdalena van Rooyen, 8/12/13, 1312080023003. Wynand Prinsloo & Badenhorst, Posbus 810, Middelburg.

7960/80—SNOEK, Johannes Jacobus, 22/11/17, 17112250 22004, Derde Laan 23, Linden, 23/6/80; Irma Lisbeth Snoek, 17/10/19, 1910170045008. Mev I. L. Snoek, p/a Posbus 48066, Rooseveltpark.

7753/80—DE VILLIERS, Anna Magdalena, 16/3/14, 1403 160030008, Ninettestraat 613, Erasmia, 23/6/80. Vorster & Coetzee, Posbus 5, Parys.

8526/80—OBERHOLZER, Adriaan Stephanus, 29/1/29, 2901295004003, Rhenosterfontein, Pk. Zeerust, 17/6/80; Maria Cornelia Oberholzer, gebore Jansen van Vuuren, 12/10/28, 2810120001003. Van der Merwe & Calitz, Posbus 53, Zeerust.

8952/80—ELLIOTT, Charles Joseph, 26/10/24, 24102650 20007, 154 Park Crescent, Turffontein, Johannesburg, 28/6/80; Gertruida Magarita Elliott, gebore De Villiers, 24/1/30. Thiel, Theron & Le Grange, Posbus 200, Potchefstroom.

6608/80—HATTINGH, Nicolaas Francois, 21/1/33, 3301 215011007, Stegmanstraat 14, Krugersdorp-Wes. 25/5/80; Agatha Cornelia Hattingh, 20/6/37, 3706200006004. G. J. Smith & Van der Watt, Posbus 98, Krugersdorp.

7702/80—RHEEDER, James Barry Munnik Hertzog, 18/9/15, 1509185042008, Lanorkwoonstelle 72, Adcockstraat 541, Gezina, Pretoria, 23/6/80; Jeanetta Maria Rheeder, 30/3/18, 1803300033004. Bertie van Vuuren, Posbus 1, Heilbron.

8951/80—ENGELBRECHT, Gerhardus Johannes, 6/4/30, 3004065021007, 82 Dunning Road, Dunnottar, 7/7/80; Valery Daintry Engelbrecht, born Costser, formerly Norman, 26/8/39, 3908260003000. Ivan Davies Theunissen & Partners, P.O. Box 16, Springs.

8630/80—COOMBES, Gladys Linetter, born Smith, 26/7/1896, 9607260014009, 405 RNS Mansions, Kotze Street, Sunnyside, Pretoria, 5/3/80. Elliott Brothers, P.O. Box 67, Stutterheim.

8986/80—JANSEN VAN VUUREN, Jacobus Johannes, 17/11/07, 0711175014002, Elsstraat 5, Swartruggens, 12/7/80; Dolly Jansen van Vuuren, gebore Carr, 13/2/13, 1302130010 001. Du Preez & Kie., Posbus 4, Swartruggens.

9855/80—WOLMARANS, Gabriel Matthys, 26/3/15, 150 3265015000, Deyselstraat 1183, Booysens, Pretoria, 15/7/80; Gertruida Magdalena Wolmarans. Haasbroek & Boezaart, Posbus 2205, Pretoria.

5428/80—BOTHA, Ethel Gwendoline, 1/7/1895, 971005484, Lancasterlaan 100, Craighall Park, Johannesburg, 2/4/80. Santamtrust Bpk., Posbus 1199, Port Elizabeth.

4713/80—VAN DER MERWE, Matthys Johannes, 19/7/10, 1007195012004, wewenaar, Gestoptefontein, Ottosdal, 24/3/80. Meyer, Van Sittert & Kropman, Posbus 91, Klerksdorp.

8860/80—DE WITT, James John, 27/5/03, 0305275027004, Kesselstraat 89, Fairland, 4/7/80; Johanna Catharina Magdalena de Witt, gebore Janse van Rensburg, 10/8/10. Van Wyk de Vries, Malan & Steyn, Posbus 5892, Johannesburg.

6582/80—BEUKES, Magaretha Johanna, 9/12/13, 131209 0009000, Schoemanstraat 55, Potgietersrus, 21/5/80. Mathews, Lanser & Williams, Posbus 18, Warmbad.

8794/80—LEVY, Minnie, 14/2/1898, 9802140003005, 118 Avondale Street, Sydenham East, Johannesburg, 18/6/80. Alex Baillie, Koseff & Wheeler, P.O. Box 490, Benoni.

7711/80—SCOTTSHIELDS, Esther Mary, 19/12/1898, 921 2190002008, 23 Sydney Road, Lorentzville, Johannesburg, 26/6/80. Joseph Fine, 166/7 Shakespeare House, 114 Commissioner Street, Johannesburg.

9182/80—TOSEN, Christoffel Jacobus, 3/10/01, 011003500 4008, Everardstraat 84, Ermelo, 9/7/80; Maria Magdalena Tosen, 18/1/13, 1301180020001. Bekker Brink & Brink, Posbus 73, Ermelo.

7527/80—GLOY, Frans Petrus, 2/6/25, 2506025003009, Oxfordstraat 43, Evander, 10/5/80. Die Sentrale Eksekuteurskamer Bpk., Posbus 3626, Pretoria.

8990/80—WATKINS, Donald, 7/12/28, Sakoenda, 23/3/80. Boland Bank Bpk., Posbus 1280, Pietermaritzburg.

8853/80—URBANI, Pieter, 10/5/05, 0505105021008, 15 Mentz Street, Casseldale, Springs, 4/7/80; Maria Susanna (Susan) Urbani, 28/2/07, 0702280032005. Bennett & McNaughton, P.O. Box 592, Springs.

8646/80—HOWARD, Charles Henry, 15/11/11, 11111550 46000, wewenaar, Duvenhagestraat 221, Danville, Pretoria, 7/7/80. Haasbroek & Boezaart, Posbus 2205, Pretoria.

5648/78—JOUBERT, John Henry, 13/9/39, 3316065 49W, 2 Cassia Road, Wychwood, Germiston, 13/5/78; Henderiehetta Georgina Joubert. Ehlers & Vennote Ingelyf, Posbus 3248, Pretoria.

8967/80—LABUSCAGNE, Johanna Christina, 3/12/1898, 9812030003007, Roosstraat 250, Meyerspark, Pretoria, 11/7/80; Christoffel Andries Labuscagne, 17/5/1900. Ehlers & Vennote Ingelyf, Posbus 3248, Pretoria.

10297/80—RIEKERT, Theunis Johannes, 17/10/05, 051017 5017001, Beestekraal, Pk. Brits, 20/7/80; Sofia Magrietha Riekert, gebore Roets, 31/10/08. Ehlers & Vennote Ingelyf, Posbus 3248, Pretoria.

9083/79—VAN STADEN, Hermanus Johannes, 2/11/07, 071 1025013006, 124 Roux Street, Danville, Pretoria, 24/4/79. Shapiro & Pokroy Inc., Tudor Chambers, Church Square, Pretoria.

9075/80—STRYDOM, Jacobus Johannes, 10/2/11, 110210 75007002, Smutsstraat 371, Kloofsig, Pretoria, 12/7/80; Jane Sophia Strydom, 29/12/18. Van Zyl, Le Roux & Hurter, Posbus 974, Pretoria.

8444/80—HOLLIDAY, Jan Andries Stephanus, 19/9/18, 1809195002004, Naudestraat 298, Wonderboom-Suid, Pretoria, 4/7/80. I. Swartzberg, Southern Lifegebou 38, Pretoriusstraat 233, Pretoria.

2091/80—BRITS, Jacobus Johannes, 31/5/58, 5805315119 005, 23ste Laan 441, Villieria, Pretoria, 25/1/80. Jac H. Smit, Leonard & Breytenbach, Posbus 75, Rustenburg.

7627/80—JAN'SE VAN RENSBURG, Magarietha Elizabeth, 22/12/59, 5912220039003, Kockstraat 12, Rustenburg, 24/5/80. Jac H. Smit, Leonard & Breytenbach, Posbus 75, Rustenburg.

8978/80—PARKER, Gertrude Annie, 10/8/06, 0608100002 005, 73 Maxwelton, 6 Goldreich Street, Hillbrow, Johannesburg, 17/6/80. Rooth & Wessels, P.O. Box 208, Pretoria.

9103/80—COGILL, William Henry, 12/3/1893, 9303125007 004, 341 Julius Jeppe Street, Waterkloof, Pretoria, 9/7/80. Stegmanns, P.O. Box 344, Pretoria.

4719/80 ASR 3C—PETTERSEN, Alf Christian William, 26/3/16, 1603265033001, 56 Leonora Road, Selcourt, Springs, 4/4/80. C. O. Pettersen, 56 Leonora Road, Selcourt, Springs.

8935/80/ASR 2B—ALLY, Abduragman, 20/8/24, 240820 5071023, 353 Ally Street, Actonville, Benoni, 16/6/80. A. E. Lambat, P.O. Box 11042, Germex.

9751/80—STRYDOM, Gert Johannes Jacobus, 25/8/21, 171 1125002007, Carel Trichardlaan 520, Mountain View, Pretoria, 22/7/80; Elizabetta Magritha Strydom, gebore Henderson,. D. G. Kolver, Posbus 2330, Pretoria.

5707/79—LERM, Beatrix Anna Christina Magdalena, 29/11/1890, 9011200007002, Pk. Mamogalieskraal, distrik Brits, 1/5/79. Jonker van Onselen & Van der Walt, Posbus 1008, Brits.

14094/79—BLIGNAUT, Sydney Joey Meyer, 28/2/11, 110 2285020007, Posbus 317, Brits, 20/11/79; Anna Margaretha Blignaut. Jonker van Onselen & Van der Walt, Posbus 1008, Brits.

6750/78—DU PLESSIS, Thomas Ignatius Steenkamp Robbertse, 23/5/09, 0905235017001, Doornfontein, Pk. Koedoeskop, 29/5/78. Immelman & Visagie, Posbus 673, Rustenburg.

75/78—CLAUSEN, John Thor, 27/6/15, 1506275037005, 4 Sherwood Flats, Westgate Street, Port St John's, 7/6/78; Maisie Josephine Clausen, born Wilson, 1707243001. Sapire, Jacobson & Creswick, 1-9 Symons Buildings, 174 Central Avenue, Mayfair, Johannesburg.

5518/80—JONKER, Gert Francois, 25/11/04, 0411255009 002, A. G. Visserstraat 60, Middelburg, 27/3/80; Jacomina Aletta Jonker, gebore Du Plessis, 4/2/09, 0902040005008, S. E. Steyn & Esterhuysen, Posbus 68, Middelburg.

8723/78—PRINSLOO, Sarah Francis, 9/9/13, 13090600 40007, Endstraat 8, Pk. Swartklip, Rustenburg, 13/12/78; James Prinsloo, 18/9/10. Kemp & De Beer, Posbus 3931, Pretoria.

3071/80—KOEKEMOER, Theunis Johannes, 26/6/06, 0606 265021000, Bultfontein, Pk. Hekpoort, 27/1/80. Die Sentrale Eksekuteurskamer Bpk., Posbus 3626, Pretoria.

7947/80—PADDOCK, Cornelius Marthinus, 3/2/24, 2402 035051008, Plot 147, Boltonworld, 15/6/80; Hendrina Maria Paddock, 28/4/44, 4404280079005. Die Sentrale Eksekuteurskamer Bpk., Posbus 3626, Pretoria.

8341/80—JOHNSON, Daniel Johannes Jacobus, 14/12/02, 0212145006004, Luttigstraat 307, Pretoria-Wes, 28/6/80. Die Sentrale Eksekuteurskamer Bpk., Posbus 3626, Pretoria.

8215/80—BEHRENS, Ida Sophie Johanne, 24/1/1895, 361 400257W, Kroondal, distrik Rustenburg, 25/6/80. Altmann & Brugman, Posbus 135, Rustenburg.

3478/80—VENTER, Hendrik Stephanus Johannes, 18/5/ 25, 0507255018008, Vlaauwboschkraal, Watervalboven, 6/3/ 80. Purdon Gilmour, Dorpstraat 137, Stellenbosch.

4123/79—JACOBS, Phillippus Petrus, 25/6/15, 356363206 W, Koos Delareystraat 211, Pretoria-Noord, 28/2/79; Joanetta Petronella Kruger, 1/10/20. Snyman De Jager & Breytenbach, Posbus 565, Pretoria.

7204/80 ASR 2E—JAMIESON, Alexander Johnstone, 8/ 2/08, 331276565W, 4 Leo Street, Kenilworth, Johannesburg, 1/6/80. T. R. Franklin, P.O Box 2536, Johannesburg.

6103/80—TAKTIKOS, Konstantinos, 17/3/32, Paspoort T0824554, Hertzstraat 93, Vanderbijlpark, 18/3/80; Evangelia Taktikos, 9/11/44, 4411090100103. Santamtrust Bpk., Posbus 1199, Port Elizabeth.

7880/80—STUART, Carel James, 26/2/11, 1102265003007. Poste Restante Plot 75, Oaktree, Krugersdorp, 27/5/80; Georgina Stuart, 370901209W. Santamtrust Bpk., Posbus 680, Bellville.

5011/79—KORAAN, Freek, 6/12/08, 354399020E, Macdonaldstraat 50, Promosa, Potchefstroom, 16/2/79; Daisy Koraan, gebore Frazenburg, 12/7/12. Fleischacks, Posbus 64, Potchefstroom.

5188/80—CRONJE, Diedericks Gabriel, 15/10/57, 5710155 024002, Darbylaan 42, Brakpan, 27/3/80, Santamtrust Bpk., Posbus 680, Bellville.

8167/80—KNIGHT, Esme Shirley, 27/7/26, 2607270029002, 303 31st Avenue, Villieria, Pretoria, 20/6/80. Galgut Courtis & Da Ponte, P.O. Box 1004, Pretoria.

6736/80—BOSSENGER, Alexander Eric, 3/3/04, 0403085 014005, Maxim Hotel, corner of Pretoria and Hamilton Streets, Arcadia, Pretoria, 31/5/80. Shapiro & Pokroy Inc., P.O. Box 196, Pretoria.

9415/80—BOTHA, Johannes Christiaan Cornelis, 1/12/11, 1112015027008, Bequestwoonstelle 3, Proesstraat 458, Arcadia, 2/7/80; Maria Elizabeth Botha. MacRobert, De Villiers & Hitge Ing., Derde Verdieping, Southerngebou, Pretoriusstraat, Pretoria.

8904/80—PIETERSON, Cyril George, 8/1/09, 0901085011 004, Plot 49, Kameeldrift 521, Derdepoort, 30/6/80; Gezina Pieterson, 7/7/14, 1407070040007, Santamtrust Bpk., Posbus 4680, Pretoria.

7452/80—VISSER, Jacobus Paul, 16/7/1897, 970716504009, Huis Silversig, Jasmynstraat, Silverton, 16/6/80. Santamtrust Bpk., Posbus 4680, Pretoria.

6382/80—DU PREEZ, Dirk Johannes, 24/8/47, 4708245107002, Palalalaan 122, Doringkloof, Verwoerdburg, 16/5/80. Santamtrust Bpk., Posbus 4680, Pretoria.

8911/80—STEINMANN, Rudolph Andries, 14/8/1894, 940 8145001000, Susan Strydomouetehuis, Pretoria, 6/7/80; Anna Francina Steinmann, 21/9/1899, 9909210003003. Santamtrust Bpk., Posbus 4680, Pretoria.

14574/80—PIETERSE, Ernst Philippus, 2/8/03, 03080250 23000, Cawdorlaan 36, Hurlingham, Sandton, 12/11/79; Cornelia Magrieta Elizabeth Pieterse, 8/5/08, 0805080035001. Van Sittert Leask & Rheeder, Posbus 61415, Marshalltown.

OLWAGE, Johanna Frederika, 25/9/1895, 361402032W, Klopperstraat 229, Rustenburg, 6/7/80. Santamtrust Bpk., Posbus 4680, Pretoria.

2748/80—SWART, Jan Johannes, 24/8/37, 3708245047001, Ridderstraat 44a, Rustenburg, 10/2/80; Susanna Sophia Swart. Santamtrust Bpk., Posbus 4680, Pretoria.

6877/80—PELSER, Pieter Hendrik, 17/1/52, 5201175052 009, Cambridgeweg 67, Clubview-Oos, Pretoria, 29/5/80; Johanna Wilhelmina Pelser, gebore Barnard, 10/5/48, 48051 0032000. Santamtrust Bpk., Posbus 4680, Pretoria.

9505/80—KOEN, Theunis, 16/8/1888, 8808165001007, Bodensteinstraat 28a, Pietersburg, 9/7/80. Volkskas Bpk., Posbus 1730, Pretoria.

9130/80—DE KLERK, Hendrik Viljoen, 26/11/16, 161126 5011000, Hoewe 46, Onderstepoortlandbouhoewes, 28/6/80. Volkskas Bpk., Posbus 1730, Pretoria.

8965/80—KOEN, Fredrika Johanna, 11/6/36, 3606110004 000, Worstlaan 249, Marble Hall, 21/6/80; Johan Nicolaas Koen, 1/8/34, 3408015007000. Volkskas Bpk., Posbus 1730, Pretoria.

9351/80—ZEELIE, Johannes Matthys, 31/7/25, 25073150 39000, Kruisstraat 6, Rustenburg, 10/6/80; Sophia Catharina Zeelie, 17/8/28, 2808170010007. Volkskas Bpk., Posbus 1730, Pretoria.

9464/80—STRYDOM, Gerhardus Cornelis, 16/10/13, 1310 165002009, Sewende Laan 46, Alberton, 25/6/80; Jacoba Johanna Susanna Strydom, 24/4/21, 2104240017002. Volkskas Bpk., Posbus 61488, Marshalltown.

7996/80—FLOOR, Richard Grenville, 30/7/26, 2607305041 006, Limbalaan 10, Birchleigh, 12/6/80. Volkskas Bpk., Posbus 61488, Marshalltown.

7508/80—DU TOIT, Egbert Ignatius, 7/6/54, 5406075059 000, Maraisstraat 30, Laversburg, Nigel, 8/4/80; Maria Elizabeth du Toit, 18/12/55, 5512180110008. Volkskas Bpk., Posbus 61488, Marshalltown.

8398/80—VORSTER, Roelof Louis, 1/3/16, 1603015035009, Reitzstraat 41 Meyerton, 6/6/80. Volkskas Bpk., Posbus 61488, Marshalltown.

8145/80—ELS, Willem Johannes, 2/3/21, Plot 50, Nanescol, Vanderbijlpark, 4/6/80; Christiaan Frederik Els, 18/10/ 19, 1910185033007. Volkskas Bpk., Posbus 61488, Marshalltown.

8831/80—STEENKAMP, Anna Catherina, 1/11/07, 02238 334 Soutpanslaan 52, Quellerina Florida, 12/6/80; Daniel Jacobus Steenkamp, 17/8/07, 0708175009008. Volkskas Bpk., Posbus 61488, Marshalltown.

9396/80—VERMEULEN, Hendrina Margaretha, voorheen Van Staden, gebore Roos, 24/5/08, 0805240011009, Blommesteinstraat 24, Krugersdorp, 29/6/80. Volkskas Bpk., Posbus 61488, Marshalltown.

8001/80—GOUWS, Christina De Wet, 28/10/1900, 001028 0004002, Witwatersrandscouetehuis, Escombelaan 36, Parktown, 6/6/80. Volkskas Bpk., Posbus 61488, Marshalltown.

8613/80—VAN WYK, Johanna Dorothea, gebore Dippenaar, 13/10/04, 0410130003008, Cydoniaweg 106, Primrose Heuwel, Germiston, 27/5/80. Volkskas Bpk., Posbus 61488, Marshalltown.

7464/80—VAN DEN BERG, Pieter Adriaan, 16/3/1899, 9903165004009, Eerste Weg 61, Witpoort, Brakpan, 3/4/80; Anna Catharina van den Berg, 031.240005000. Volkskas Bpk., Posbus 61488, Marshalltown.

8350/80—LUBBE, Johannes Hendrik, 10/8/06, 060810500 3008, Stockenstroomweg 222, Boksburg, 12/6/80; Phyllis Alice Lubbe, 15/3/08, 0803150001003. Volkskas Bpk., Posbus 61488, Marshalltown.

9095/80—BLIGNAUT, Jacoba Petronella Francina, 19/1/ 1890, 407294644W, weduwee, Betsie Verwoerd Tehuis, Conradrylaan, Blairgowrie, Randburg, 18/6/80. Volkskas Bpk., Posbus 61488, Marshalltown.

9598/80—LEWIS, Willem Rudolph, 25/5/1893, 930525500 2002, New Central Hotel, Sutterweg 26, Warmbad, 4/6/80. Volkskas Bpk., Posbus 1730, Pretoria.

9508/80—LIEBENBERG, Jan Gabriel, 19/2/1892, 920219 5002004, Voortrekkerstraat 33, Lydenburg, 1/7/80; Johanna Magdalena Susanna Liebenberg, 17/7/1895, 314580469. Volkskas Bpk., Posbus 1730, Pretoria.

9167/80—SNYMAN, Nicolaas Gerhardus Stephanus, 27/ 4/80, 1004275024009, Perseel H55, Marble Hall, 27/6/80; Petronella Jacoba Snyman, 7/5/12, 1205070013002. Volkskas Bpk., Posbus 1730, Pretoria.

9849/80—TRUBY, Stanley Oswald, 16/6/1894, 9406169003 005, Flamincostraat 20, Swartklip, 17/5/80. Volkskas Bpk., Posbus 1730, Pretoria.

4265/80—BREEDT, Johannes Arnoldus, 21/1/28, 356187 637W, Bergstraat 74, Nylstroom, 26/1/80. Abel Mulder & Karel Landsberg, Posbus 245, Nylstroom.

9026/80—JACOBS, Elizabethta Johanna Maria, 27/2/1899, 9902270014002, Burgerstraat 41, Louis Trichardt, 19/6/80; Volkskas Bpk., Posbus 1730, Pretoria.

8937/80—BREED, Douw Gert, 15/12/24, 2412155022002, Brits, 17/6/80; Catharina Adriana Breed, 25/9/28, 28092500 27002. Volkskas Bpk., Posbus 1730, Pretoria.

9517/80—OLIVIER, Gert Johannes Petrus, 6/11/06, 0611 065003000, Ons Tuis, Kamer 112, Soutpansbergweg, Riviera, Pretoria, 30/6/80; Maria Elizabeth Wilhelmina Olivier, 24/9/ 13, 1309240047005. Volkskas Bpk., Posbus 1730, Pretoria.

9467/80—STEYL, Catharina Elizabeth Johanna, 18/4/1898, 9804180003002, Watsonstraat 14, Swartklip, 5/7/80. Volkskas Bpk., Posbus 1730, Pretoria.

9431/80—HEYSTEK, Anna Johanna, 13/2/1892, 920213000 1004, Brakspruit, Marikana, 12/5/80. Volkskas Bpk., Posbus 1730, Pretoria.

University of Pretoria
Tuhdenerin Pace

9365/80—PRINSLOO, Nicolaas Hendrik Johannes Frederick, 11/11/06, 0611115005005, Plaas Kromkloof, Posbus 273, Nylstroom, distrik Waterberg, 18/3/80; Susara Johanna Susanna Prinsloo, 22/9/10, 376192406. Volkskas Bpk., Posbus 1730, Pretoria.

9188/80—VAN VUUREN, Willem Mark, 13/9/14, 140913 5030007, Plot 60, Vastfontein, distrik Pretoria, 4/7/80; Anna Christina van Vuuren, 2/5/19, 1905020012000, Volkskas Bpk., Posbus 1730, Pretoria.

9758/80—VISSER, Isabella Catharina Maria, 4/5/14, 1405 040003006, Plot 25, Waterval, Rustenburg, 8/7/80; Cornelis Bernhardus Jacobus Visser, 20/8/11, 1108205006000. Volkskas Bpk., Posbus 1730, Pretoria.

8766/80—FAURIE, Johannes Louis, 12/9/13, 1309125027 007, Alkmaar, Hermansburg, distrik Nelspruit, 13/6/80. Volkskas Bpk., Posbus 383, Pretoria.

5922/80—LE ROUX, Willem Morkel Steyn, 12/2/26, 26021 25004003, Gedeelte 96, Zandfontein, 14/5/80, Volkskas Bpk., Posbus 383, Pretoria.

9459/80—RAUTENBACH, Susara Johanna Josina, 7/1/1900, 0001070003007, Susan Strijdomhuis, Gordonweg, Colbyn, 24/6/80; Gert Hendrik Rautenbach, 25/2/1897, 970225 5003008. Volkskas Bpk., Posbus 383, Pretoria.

8835/80—STEENEKAMP, Martha Magdalena, 20/11/20, 2011200016009, Riemarwoonstelle 8, Cillierstraat, Sunnyside, Pretoria, 9/5/80. Volkskas Bpk., Posbus 383, Pretoria.

9733/80—PAPASAVAS, Kyriacoulla Michael, 12/3/26, 331521912W, 204 Tamous Court, 50 Bourke Street, Sunnyside, 12/5/80. Goldberg, Kuhn & Lanesman, P.O. Box 241, Pretoria.

8863/80—YOUNG, John Walter, 4/9/11, 1109045033066, Plot 171, Willow Glen, Meerlust Road, Pretoria, 6/7/80. Standardtrust Ltd, P.O. Box 1330, Pretoria.

8070/80—BUITENDACH, Martha Gertruida, 28/4/03, 030 4280006004, Mimosalaan 119, Proklamasieheuwel, Pretoria, 7/6/80; Hendrik Jacobus Buitendach, 25/11/20, 2011255032000. Savage Jooste & Adams Ingelyf, Permanentegebou 210, Paul Krugerstraat, Pretoria.

7889/80—DE VILLIERS, Jacob Rudolph, 20/5/09, 090520 5037005, 29ste Laan 737, Villieria, Pretoria, 21/6/80. Standardtrust Bpk., Posbus 1330, Pretoria.

9244/80—GREEFF, Bevan Matthew Paul, 18/12/13, 1312 185028006, Stand 293, Sable Park, District of Pilgrim's Rest, 19/7/80. Standardtrust Ltd, P.O. Box 1330, Pretoria.

7917/80—GROBLER, Daniel Petrus, 9/7/27, 2707095065 007, Pitzerstraat 164, Danville, Pretoria, 12/6/80; Jacoba Fredrika Johanna Anetta Grobler, 2/5/30, 3005020058000. Standardtrust Bpk., Posbus 1330, Pretoria.

9609/80—MARAIS, Daniel Francois, 12/7/17, 1707125022 003, Beyersstraat 844, Rietfontein, Pretoria, 22/7/80. Standardtrust Bpk., Posbus 1330, Pretoria.

9281/80—PRETORIUS, Matthys Wynand, 16/1/12, 12011 65001002, Groblerstraat 10, Ermelo, 1/7/80. Standardtrust Bpk., Posbus 1330, Pretoria.

4568/80—RABIE, Ryno Wessel, 9/8/1899, 308458583, Strijdom Tunnel Motel, Hoedspruit, 24/3/80; Joyce Rabie, born Walton. Standardtrust Ltd, P.O. Box 1330, Pretoria.

9734/80—ROETS, Anna Alida Magdalena, 4/2/20, 200204 0005005, 36 Bel-Airwoonstelle, Pretoriusstraat, Arcadia, Pretoria, 24/7/80; Johannes Paul Roets. Standardtrust Bpk., Posbus 1330, Pretoria.

7961/80—SCHUTTE, Elsje Maria Magdalena, 22/6/11, 110 6220014009, Jakarandahof G10, Emily Hobhousestraat, Pretoria-Noord, 3/6/80. Standardtrust Bpk., Posbus 1330, Pretoria.

9383/80—SMIDT, Stephanus Jacobus, 12/9/07, 070912502 7009, 16de Laan 617, Rietfontein, Pretoria, 3/7/80; Phillipina Danilina Smidt. Standardtrust Bpk., Posbus 1330, Pretoria.

9069/80—SNYMAN, Theunis Jacobus, 26/8/29, 29082650 61004, Suidstraat 9, Volksrust, 29/6/80; Magrieta Isabella Snyman. Standardtrust Bpk., Posbus 1330, Pretoria.

9325/80—VAN DEVENTER, Samuel, 18/11/10, 101118 5021009, 44 Kaptein Jan Street, Rietondale, 7/7/80; Ivy May van Deventer, born Parsons. Standardtrust Ltd, P.O. Box 1330, Pretoria.

6084/80—VON LOGGENBURG, Wallace Joseph, 29/8/19, 2 Tredgoldway, Lincoln Green, Salisbury, 22/6/79; Ethel Ann von Loggenburg. Standardtrust Ltd, P.O. Box 1330, Pretoria.

4554/80—VAN DER LITH, Thelma Joyce, 22/9/15, 1509 220011000, 18 Killarny Lodge, Oeder Park, Randburg, 15/3/80. Standardtrust Ltd, P.O. Box 933, Johannesburg.

8472/80—RENKEL, Reinhard, 4/7/38, 3807045045106, 10 Ash Road, Bryanston Extension 3, Randburg, 30/5/80; Ursula Helene Renkel, born Hess, 23/5/43, 4305230031105. Standardtrust Ltd, P.O. Box 933, Johannesburg.

8320/80—DOUGLASS, Beatrice Edna, 8/10/02, 02100800 04000, 18 Orange Drive, Three Rivers, Vereeniging, 19/5/80. Standardtrust Ltd, P.O. Box 933, Johannesburg.

9082/80—VILJOEN, Jacobus Gerhardus, 16/4/1889, 8904 165001004, Witkoppen, distrik Randburg, 2/5/80. Standardtrust Bpk., Posbus 933, Johannesburg.

9041/80—LINDER, Agnes Evelyn, 16/12/1886, 356179789 W, Princess Christian Home, 120 Middel Street, Muckleneuk, Pretoria, 14/7/80. Lunnon & Tindall, P.O. Box 400, Pretoria.

2981/80—MERCKEL, Manuel James, 19/12/11, 1112195 021003, George, 14/1/80. S. M. Hurwitz, 84 Fifth Avenue, Highlands North, Johannesburg.

9539/80—SEYMORE, Daniel Johannes Dorothens Willem, 7/11/1893, 9311075006009, wewenaar, Machteld Postmushuis, Alexanderstraat 372, Pretoria, 9/7/80. Syfretstrust en Eksekuteur S.A. Bpk., Posbus 1830, Pretoria.

9548/80—VENTER, Barend Johannes, 5/9/1895, 950905 5008008, Munisipalewoonstelle 34, Meintjiesstraat, Potgietersrus, 10/5/80. Syfrets Trust en Eksekuteur S.A. Bpk., Posbus 1830, Pretoria.

9248/80—HOBSON, Fred Norman Geoffrey, 8/12/41, 530 Polaris Avenue, Waterkloof Ridge, Pretoria, 8/7/80. Syfrets Trust and Executor South Africa Ltd, P.O. Box 1830, Pretoria.

6511/80—ADKINS, Edward Ferdinand, 8/8/02, 331636279 W, Hillcrest Geriatric Centre, Kliprivierberg Road, The Hill, Johannesburg, 22/5/80. Langstaffe, Bird & Co., Eighth Floor, United Towers, 160 Main Street, Johannesburg.

CURRIE, Hilda Fringa, 13/11/17, 1711130011001, 21 Edward Court, Mabel Street, Rosettenville, Johannesburg, 14/7/80. Standardtrust Ltd, P.O. Box 933, Johannesburg.

8720/80—ALTMAN, Abraham, 15/11/1891, 331451060W, Witwatersrand Jewish Aged Home, Johannesburg, 25/6/80. Eidelman Lezar & Jacobson, P.O. Box 835, Johannesburg.

LONIE, Mabel Robson, 23/1/1898, 9801230001002, Queen Alexandra Home, Orange Grove, Johannesburg, 30/6/80. Sher & Barkhan, P.O. Box 6601, Johannesburg.

9642/79—MOSHODI, Ephraim, -/-/1895, 1010041, 33 Sixth Avenue, Alexandra Township, 18/1/79; Annie Moshodi, born Serero, -/-/1900. R. I. Michel, P.O. Box 7602, Johannesburg.

9134/80—LOBBAN, Grace, 27/6/09, 0906270015009, 46 Kitchener Avenue, Kensington, Johannesburg, 7/7/80. Bell Dewar & Hall, 10th Floor, Norwich Union House, 91 Commissioner Street, Johannesburg.

8845/80—SMITH, Freda, 15/4/13, 331166365W, Coronia Hotel, O'Reilly Road, Berea, 11/7/80. Kessel Feinstein, P.O. Box 6610, Johannesburg.

7131/80—OLDHAM, Keith, 5/6/35, 252 High Lane, Burslem, Stoke-on-Trent, England, 14/6/79. Bowman, Gilfillan & Blacklock Inc., P.O. Box 1397, Johannesburg.

4685/80—COETZEE, Valentine James, 12/7/02, 02071250 15017, 3276 Dorset Street, Protea Township, Johannesburg, 25/7/79; Johanna Coetzee, 0905240030015. Bowman, Gilfillan & Blacklock Inc., P.O. Box 1397, Johannesburg.

8552/80—WATSON, Leonard Victor, 11/3/17, 170311501 8002, 4 Short Street, Rosettenville, 2/7/80. Cranko Nackan & Karp, P.O. Box 2585, Johannesburg.

7920/80—HARVEY, Martina Elsie Johanna, 2/3/09, 15th Goch Road, Gerdview, 25/6/80; Adriaan Brawn Goldren Harvey, 15/8/06, 0608155023005, Ismail Ayob & Associates, P.O. Box 728, Johannesburg.

7560/80—SERRURIER, Kathleen Mary Elaine, 7/6/10, 100 6070019001, Lakeside Lodge, Johannesburg, 14/6/80. Bell Dewar & Hall, P.O. Box 61680, Marshalltown.

8800/80—MARAIS, Albertus Stephanus, 8/12/07, 071208 5029007, Lunderstedtweg 3, Parkdene, Boksburg, 18/6/80. Barclays National Bank Ltd, P.O. Box 8000, Johannesburg.

7454/80—WILSON, Anthony, 5/9/14, 331552502W, 67 Fifth Avenue, Inanda, Sandton, 13/6/80. D. G. Nicholson & G. C. Fletcher, P.O. Box 4902, Johannesburg.

8403/80—WOLFSON, Israel, 7/4/06, 0604075014000, 34 Grove Road, Fairwood, Johannesburg, 18/6/80. Sidney P. Franklin, P.O. Box 4012, Johannesburg.

8743/80—CHILDS, George William, 6/7/13, 1307065033 001, 166 Kitchener Avenue, Kensington, 25/6/80. Segal & Hoffmann, P.O. Box 3167, Johannesburg.

9880/80—HAUG, Ernst, 20/9/07, 0709205025006, 33 Buckingham Road, Kensington, Johannesburg, 14/7/80; Johanna Magdalena Haug, 1406150022000. Sloot Broido Hesselson & Liknaitzky, P.O. Box 1793, Johannesburg.

3485/79—ABER, Sonia, born Eliasson, 11/8/25, 33/11 S. de Shimshon, Barnea, Ashkelon, Israel, 25/11/78. Bowens, P.O. Box 6434, Johannesburg.

3448/80—BETTS, Ernest Frederick Samuel, 30/3/07, 070 3305015009, 9 Camellia Road, Wychwood, Germiston, 17/3/80. Bowens, P.O. Box 6434, Johannesburg.

9035/80—KILGOUR, Ettie Elizabeth, 9/8/1890, 331358738, Happy Autumn Geriatric Home, Old Harrow Road, Yeoville, 8/7/80. Webber, Wentzel & Co., P.O. Box 61771, Marshalltown.

8658/80—MALAN, Daniel Johannes, 10/12/23, 096710358, 138 Minerva Avenue, Glenadrienne, Johannesburg, 24/6/80. Webber Wentzel & Co., P.O. Box 61771, Marshalltown.

9594/80—JACOBSON, Annette, 22/8/15, 1508220037007, 101 Roxdale, Second Avenue, Houghton, Johannesburg, 22/7/80. Sapire, Jacobson & Creswick, P.O. Box 42038, Fordsburg.

8128/80—ALEXANDER, John Hutchinson, 17/7/1895, 950 7175004006, Cosmos House, 4 Nottingham Road, Kensington, Johannesburg, 30/6/80. Barclays National Bank Ltd, P.O. Box 2036, Johannesburg.

6032/80—RANDALL, Elizabeth Margaretha, 14/12/1892, 9212140003007, 16 The Valley Road, Westcliff, Johannesburg, 29/4/80. Barclays National Bank Ltd, P.O. Box 2036, Johannesburg.

8757/80—DENZIN, Wilhelm Hermann Waldemar, 1/7/16, 1607015042006, 4 Reswindhof, Princess Avenue, Windsor Park, Randburg, 27/6/80; Maria Denzin, born Zaswoski, 31/5/16, 1605310037101. Barclays National Bank Ltd, P.O. Box 2036, Johannesburg.

8814/80—PULLEN, John Steven, 13/6/38, 3806135087002, 108 First Avenue, Fairlands, 19/6/80; Susanna Petronella Pullen, 23/11/44, 4411230093002. Barclays National Bank Ltd, P.O. Box 2036, Johannesburg.

8388/80—SMIT, Daniel Petrus, 14/7/24, 2407145036005, 69 Dunvegan Street, Sydenham, Johannesburg, 27/6/80. Barclays National Bank Ltd, P.O. Box 2036, Johannesburg.

9009/80—FRASER, Harry Noble, 29/9/16, 1609295001004, 15 Talton Road, Forest Town, 27/6/80. Barclays National Bank Ltd, P.O. Box 2036, Johannesburg.

8993/80—ANDERSEN, Daphne Dulcie, 22/5/14, 140522 0086008, 303 Manhattan Court, Plein Street, Hillbrow, 6/7/80. Barclays National Bank Ltd, P.O. Box 2036, Johannesburg.

9031/80—KRUGER, Helenius Johannes, 11/2/1897, 970 2115002000, 11 Sneddon Street, Sydenham, Johannesburg, 28/5/80. Barclays National Bank Ltd, P.O. Box 2036, Johannesburg.

8534/80—ROBSON, Edward George, 13/12/10, 10121350 3400, 7 Deutzia Road, Wychwood, Germiston, 2/7/80; Joyce Eileen Robson, born Whiffler. Geo. Isserow & T. L. Friedman, P.O. Box 40088, Cleveland.

9427/80—DRURY, Adriana, 5/5/1891, 022323360, Queen Alexandra Home, Eighth Street, Orange Grove, Johannesburg, 11/7/80. Bell Dewar & Hall, 10th Floor, Norwich Union House, 91 Commissioner Street, Johannesburg.

9309/80—VAN DER WESTHUYZEN, Sharon Lee, 6/4/56, 5604060066002, 17 Greenhill Road, Emmarentia, Johannesburg, 12/6/80. Bowman Gilfillan & Blacklock Inc., P.O. Box 1397, Johannesburg.

8326/80—GLASS, David, 31/10/08, 0810315012007, 10 Shengani Road, Emmarentia Extension, Johannesburg, 25/6/80. Bowman, Gilfillan & Blacklock Inc., P.O. Box 1397, Johannesburg.

8767/80—FAIRBAIRN, Charles William, 6/5/12, 120506 5008009, 18 Bradford Road, Bedfordview, 16/6/80. Bowman, Gilfillan & Blacklock Inc., P.O. Box 1397, Johannesburg.

11004/79—OMAR, Ismail. A. S. Cassim & Co., P.O. Box 3279, Pretoria.

8959/80—JOB, Thelma Joyce, 13/10/15, 1510130042002, 10 Seventh Avenue, Mayfair, Johannesburg, 7/7/80; James Joseph Job, 6/5/20, 2005065045004. Ivan Morris & Greg Morris, Seventh Floor, Delvers Square, corner of Kerk and Delvers Streets, Johannesburg.

9160/80—ROYDEN, George, 18/7/16, 1607185044006, 146 Leicester Road, Kensington, 30/6/80. J. Royden, 146 Leicester Road, Kensington.

9645/80—AUCAMP, Jan Christoffel 8/4/01, 0104085006 005, wewenaar, Kleinfontein, Cullinan, 22/7/80. Security Eksekuteur en Trust Maatskappy Bpk., Posbus 3127, Pretoria.

VAN DER WESTHUIZEN, Hildr. Carolina Dorothea, 12/12/15, 1512120025005, Leeuwlaagte, distrik Balfour, 23/7/80; Hendrik Adam van der Westhuizen. Standardtrust Ltd, P.O. Box 933, Johannesburg.

7805/80—TERBLANCHE, Johannes Gerhardus, 31/1/06, 0601315014006, Kunenelaan 292, Sinoville, Pretoria, 13/6/80; Aletta Catharina, gebore Schoeman, 13/1/09. Kemp & De Beer, Posbus 3931, Pretoria.

9231/80—EVANS, Mary Elizabeth, born Williams, 4/5/1893, 331493770W, Nazareth House, Queen Wilhelmina Avenue, Waterkloof, Pretoria, 14/7/80. Barclays National Bank Ltd, P.O. Box 27033, Sunnyside.

8218/80—CARY, Douglas Falkland, 19/7/03, widower, Fort Victoria, Zimbabwe, Rhodesia, 23/12/79. Security Executor and Trust Company Ltd, P.O. Box 3127, Pretoria.

9989/80—BUTLER, Henning Jonathan, 6/9/1900, Silwersig, Jasmynlaan 513, Silverton, 4/8/80. Nel & Stofberg, Posbus 29135, Sunnyside.

9098/80—BECKETT, Thomas William, 14/10/05, 051014 5010003, 11 Pienaar Street, Warmbaths, 3/7/80; Margaretha Susanna Magdalena Beckett. Barclays National Bank Ltd, P.O. Box 27033, Sunnyside.

7098/80—UYS, Petrus Johannes, 9/2/07, 0702095012002, Joubertstraat 59, Bronkhorstspruit, 2/6/80; Elizabeth Johanna Antoinette Uys. Barclays-Nasionale Bank Bpk., Posbus 27033, Sunnyside, Pretoria.

7693/80—MACAULAY, Dennis William, 13/10/19, 311572 894W, Papkuilfontein, Pk. Bronkhorstspruit, 16/6/80. Barclays National Bank Ltd, P.O. Box 27033, Sunnyside, Pretoria.

6445/80—ROOS, Anna Magrietha Catriena, 19/6/21, 2106 190008006, Blythelaan 21, Heidelberg, 30/4/80; Andries Johannes Roos, 11/11/20, 2011115004009. Barclays-Nasionale Bank Bpk., Posbus 27033, Sunnyside.

9068/80—STRYDOM, Renier Gerhardus, 6/4/1899, 9904 065003000, 28ste Laan 327, Villieria, Pretoria, 7/7/80; Hendrika Wilhelmina Strydom, 26/7/1897, 9707260002002. Barclays-Nasionale Bank Bpk., Posbus 27033, Sunnyside.

7768/80—HITCHCOCK, Ambrose Dyason, 20/8/1898, 980 8205008003, 20 Herbert Baker Street, Groenkloof, Pretoria, 8/6/80. Barclays National Bank Ltd, P.O. Box 27033, Sunnyside, Pretoria.

6624/80—LUDEWIG, Rudolph Gerhard Hans, 23/9/09, 090 9235042001, Magnolia Haven, Whitestraat 502, Brooklyn, 11/5/80. Barclays-Nasionale Bank Bpk., Posbus 27033, Sunnyside.

9537/80—SWANEPOEL, Johannes Jochemus, 3/2/1892, 920203500100, Boschkop, P.O. Box 20288, Alkantrant, Pretoria, 27/6/80. Barclays National Bank Ltd, P.O. Box 27033, Sunnyside.

8192/80—STOLTZ, Adriaan Willem, 16/1/30, 3001165056 008, 83 Douglas Colliery, P.O. Vandyksdrift, 21/6/80; Valerie Lillian Stoltz, formerly Grove, born Heard, 30/5/29, 290530 0044003. Barclays National Bank Ltd, P.O. Box 27033, Sunnyside.

6944/80—HOLTZHAUSEN, Daniel Dennis, 18/1/13, 1301165011005, Voortrekkerstraat 27, Witbank, 31/5/80; Martha Margaretha Holtzhausen, voorheen Grobler, gebore Kotze, 31/9/18, 1808310014001. Barclays-Nasionale Bank Bpk., Posbus 27033, Sunnyside, Pretoria.

DROTSKY, Jacoba Salomina, 17/9/1896, 365530628W, Rus 'n Bietjiewoonstelle 20, Sarel Cilliersstraat Springs 17/7/80. Barclays-Nasionale Bank Bpk., Kerkplein, Kerkstraat, Pretoria.

7470/80—D'ELBOUX, Stephenson William Reginald, 9/3/18, 1803095043002, 87 Mica Street, Proclamation Hill, Pretoria, 26/5/80. Barclays National Bank Ltd, P.O. Box 1365, Pretoria.

9684/80—GEISSLER, May McGillivray, born Jones, 6/5/06, 0605060009004, 1/2 Chevenne Flats, Devenish Street, Sunnyside, Pretoria, 24/7/80. Barclays National Bank Ltd, P.O. Box 1365, Pretoria.

9215/80—BREYTENBACH, Izak Johannes Jacobus, 9/7/06, 0607095029007, Ons Tuis, Soutpansbergweg, Pretoria, 30/6/80. Barclays-Nasionale Bank Bpk., Posbus 1365, Pretoria.

9126/80—JAMES, Charles Lawrence, 14/3/1897, 97031450 10005, 303 Eastwood Street, Arcadia, Pretoria, 11/7/80. Barclays-Nasionale Bank Bpk., Posbus 1365, Pretoria.

9301/80—STEYN, Eustace, 29/3/1894, 9403295003005, Weskoppies Hospitaal, Pretoria, 7/7/80; Anna Wilhelmina Steyn 3563205041. Barclays-Nasionale Bank Bpk., Posbus 1365, Pretoria.

9197/80—VAN DER WESTHUIZEN, Aletta Catharina Maria, 14/4/06, 0604140010009, Van Broekhuizenstraat 273, Danville, Pretoria, 11/7/80. Barclays-Nasionale Bank Bpk., Posbus 1365, Pretoria.

8627/80—CRONJE, Abraham (Abram) Marthinus, 16/8/05, 0508165011000, Waterval, distrik Koster, 4/7/80; Anna Magrietha Catharina Cronje, 30/4/10, 1004300005007. Barclays National Bank Ltd. P.O. Box 1365, Pretoria.

2585/80—JANSEN VAN RENSBURG, Hermanus, 5/12/17, 1712055002009, Kafferskraal, Pk. Marikana, Posbus 62, Marikana, 29/1/80; Alice Jansen van Rensburg 5/7/26, 2607 050046002. Barclays-Nasionale Bank Bpk. Posbus 1365 Pretoria.

9493/80—FOURIE, Martha Maria, gebore Du Plessis, 15/6/40, 4006150044009, Dirk Vandeventerrylaan 145, Wonderboom, Pretoria, 27/6/80; Philip Peter Fourie, 13/3/39, 3903 135024000. Barclays-Nasionale Bank Bpk., Posbus 1365, Pretoria.

9498/80—GOOSEN, Izak Jacobus, 6/4/11, 1104065033002, 26 Navigation Street, West Park, Pretoria, 19/6/80; Maria Jacoba Goosen, previously Payze, born Vermeulen, 14/9/08, 0809140017009. Barclays National Bank Ltd, P.O. Box 1365, Pretoria.

9541/80—THOMPSON, William Joseph, 6/7/12, 356265 895W, 610 26th Avenue, Villieria, Pretoria, 21/6/80. Barclays National Bank Ltd, P.O. Box 1365, Pretoria.

9824/80—VAN DER MERWE, Johanna Maria, 6/9/15, 1509060013009, Le Rouxstraat 2, Elsburg, Germiston, 15/6/80. Santamtrust Bpk., Posbus 28996, Sunnyside, Pretoria.

9288/80—SMITH, Andrew Cornelius, 29/11/1900, 00112 95009002, Neptunestraat 52, Solheim, Germiston, 6/7/80; Anna Catharina Smith, 30/11/05, 0511300019003. Santamtrust Bpk., Posbus 28996, Sunnyside.

9641/80—VAN DER WESTHUIZEN, Gerhardus Johannes, 24/12/33, 3312245034000, Yvonneweg 29, Selection Park, Springs, 10/7/80; Magdalena Dorothea Susanna van der Westhuizen, 2/9/37, 3709020037001. Santamtrust Bpk., Posbus 28996, Sunnyside, Pretoria.

9413/80—BESTER, Anna Maria, 9/4/14, 1404090048003, Ivorlaan 405, Mountain View, Pretoria, 18/7/80. Santamtrust, Posbus 28996, Sunnyside.

9522/80—PLACEREANI, Anna Catherina, 5/10/07, 071005 0007008, 78 Fifth Avenue, Geduld, Springs, 16/6/80. Santamtrust Ltd, P.O. Box 28996, Sunnyside, Pretoria.

7318/80—POTTS, Josephine Maria Isabella, 23/5/1892, 920 5230002004, Nazareth House, Queen Wilhelmina Street, Waterkloof, Pretoria 13/6/80. Lapin & Lapin, P.O. Box 311, Pretoria.

8802/80—MEINDERTSMA, Andries, 20/2/29, 904530019, Vredenburgstraat 117, Potgietersrus, 23/6/80; Cornelia Catharina Maria Meindertsma, 355866896. Santamtrust Bpk., Posbus 28996, Sunnyside, Pretoria.

9382/80—SMIT, Andries Jakobus, 16/8/28, 2808165023007, Henry Slegtkampstraat 17, Witbank, 25/6/80; Maria Elizabeth Smit, 23/8/53, 5308230037006. Santamtrust Bpk., Posbus 28996, Sunnyside, Pretoria.

9534/80—VAN STRATEN, Frederik Jacobus, 29/1/44, 440 1295030007, Barnatostraat 1367, Mountain View, Pretoria, 14/6/80. Santamtrust Bpk., Posbus 28996, Sunnyside, Pretoria.

7983/80—BOTHA, Maria Elizabeth Margaretha, 26/3/27, 2703260013005, Olienhof 307, Olienhoutstraat, Birchleigh, 30/5/80; Daniël Johannes Botha, 13/10/17, 1710135004003. Santamtrust Bpk., Posbus 28996, Sunnyside, Pretoria.

9340/80—JOUBERT, George Erhardt, 22/11/08, 08112250 14000, Cathiestraat 61a, Bronkhorstspruit, 15/7/80; Sarah Maria Joubert, gebore Taliaard, 10/6/28, 2806100058005. Santamtrust Bpk., Posbus 28996, Sunnyside, Pretoria.

9087/80—VAN WYK, Elizabeth Johanna, 26/7/26, 2607 260045000, Hanlonweg 14, Valhalla, Pretoria, 2/7/80; Jacob Pieter van Wyk, 12/9/26, 2609125020004. Santamtrust, Posbus 28996, Sunnyside.

8291/80—THORESSON, Lester Johan Joachim, 3/10/44, 4410035030003, Christiaan Dewetstraat 60, Witbank, 12/6/80. Santamtrust Bpk., Posbus 28996, Sunnyside.

9864/80—BOTMA, David Jacobus, 10/10/1896, 9410105006 003, Callstraat 47, Makwassie, 10/7/80. Santamtrust Bpk., Posbus 28996, Sunnyside.

9808/80—HORN, Hendrik Johannes, 7/8/07, 0708075086 002, Robertsonstraat 34, Geduld-uitbreiding, Springs, 6/7/80; Stoffelina Stefina Petronella Horn, gebore Strydom, 22/9/14, 1409220051009. Santamtrust Bpk., Posbus 28996, Sunnyside.

1233/80—WRIGHT, Frank Francis Harold John, 6/1/1899, 331473109W, Unielaan 2, Lyttleton, 12/12/79. J. N. W. Klue, Posbus 323, Faerie Glen.

7901/80—CAMPBELL, Joseph, 19/2/08, 0802195007009, 28a Staatsdorp Randfontein, 24/5/80; Susanna Hendrina Campbell, 19/10/19, 1910190056001. Barclays National Bank Ltd, P.O. Box 8000, Johannesburg.

9260/80—LOCH, Yvonne, 26/3/36, 3603260005002, Eggo Jansenstraat 16 Oberholzer, 8/7/80. Santamtrust Bpk., Posbus 602, Johannesburg.

8968/80—LENSINK, Adriaan, 23/11/31, 3112235025004, Vanriebeeckweg 44, Kempton Park, 22/5/80; Antonia Vegina Lensink, 16/6/32, 3206160052007. Santamtrust Bpk., Posbus 9411, Johannesburg.

9025/80—JACOBS, Pieter Jacobus, 1111145041004, Christeynhof 3, Longstraat, Kempton Park, 17/6/80; Anna Margaretha Elizabeth Jacobs, 1909300048007. Santamtrust Bpk., Posbus 9411, Johannesburg.

9059/80—RAU, Otto, 13/2/07, 0702135009000, 5a Orange Road, Orchards, Johannesburg, 11/7/80; Martha Rau, 1111 020037002. Syfrets Trust and Executor South Africa Ltd, P.O. Box 61058, Marshalltown.

7543/80—NORTH, Gwynfryn Jenkyn, 10/9/18, 1809105055 100, Flat 1, Cheryl Court, 65 Becker Street, Yeoville, Johannesburg, 21/6/80. Syfrets Trust and Executor South Africa Ltd, P.O. Box 61058, Marshalltown.

8639/80—GALPIN, Frederick William, 10/3/15, 150310 5023008, 8 Letabo Flats, Elgin Road, Birchleigh, 4/6/80. Syfrets Trust and Executor South Africa Ltd, P.O. Box 61058, Marshalltown.

9454/80—PRETORIUS, Christoffel Petrus, 16/4/1899, 990 4165004007, Moriaouetehuis, Krugersdorp, 12/6/80; Aletta Sophia Pretorius, 24/10/03, 0310240005002. Santamtrust Bpk., Posbus 9411, Johannesburg.

9344/80—KROG, Rosemarie Lulu, 26/5/51, 5105260089000, Plantasieweg 15, Kempton Park-Wes, 10/6/80; John Barry Krog, 7/5/46, 4605075006009. Santamtrust Bpk., Posbus 9411, Johannesburg.

9090/80—AU (Sing), Chung (Ho Tong), 15/6/41, 410615 5041040, 105 Ninth Avenue, Mayfair, Johannesburg, 13/7/80. Alec Oshry & Cohen, P.O. Box 6966, Johannesburg.

7897/80—BOWMAN, Christiana Marie, 13/1/1890, 33161 4134W, widow, 504 King Court, King George Street, Johannesburg, 24/6/80. Kobus Boshoff, 20th Floor, North City, 51 Plein Street, Johannesburg.

13280/79—PRETORIUS, Nicolene, 4/5/56, 560504007008, 22 Bronkhorst Street, Phalaborwa, 25/10/79; Dirk Andre Pretorius. I. Kramer & Stein, P.O. Box 518, Boksburg.

4948/80—ESSACK, Mohamed Essop Mohamed, 3/2/14, 0109280000000, 8 Parrot Avenue, Lenasie Extension 1, Johannesburg, 3/4/80. I. Kramer & Stein, P.O. Box 518, Boksburg.

6829/80—BOSTON, Marjorie, 27/8/21, 2108270036006, 7 Cinderella Deep, ERPM Boksburg, 22/5/80; William Sydney Boston. I. Kramer & Stein, P.O. Box 518, Boksburg.

9271/80—NOBLE, Charles John, 13/8/29, 2908135049015, 80 Brownvlei Crescent, Eldorado Park Extension 4, Johannesburg, 4/4/80; Ruth Joan Noble, born Landsman, 331 588732K. Alec Oshry & Cohen, P.O. Box 6966, Johannesburg.

9769/80—WILLEMSE, Magdalena Elizabetha, 19/1/19, 190 1190025005, 4 Samuel Street, Kenleaf, Brakpan, 29/6/80. Barclays National Bank Ltd, P.O. Box 8000, Johannesburg.

8721/80—ATTWELL, Orlando Hope Brummer, 29/11/1898, 9811295002001, 227 Rondebult Road, Farrar Park, Boksburg, 24/6/80. Barclays National Bank Ltd, P.O. Box 8000, Johannesburg.

8749/80—CORTLEVER, Julia Carmen, 15/2/11, 11021500 27004, widow, 102 Merrowdown, 5 Rudd Road, Illovo, Johannesburg, 26/6/80. Syfrets Trust and Executor South Africa Ltd, P.O. Box 61058, Marshalltown.

8062/80—VOGEL, Henriette Louise Jacoba, 17/6/22, 220 6170041108, 127 First Street, Parkmore, Sandton; Eduard Vogel. Syfrets Trust and Executor South Africa Ltd, P.O. Box 61058, Marshalltown.

8479/80—STERN, Theodore William, 1/12/05, 05120150 31002, 10 Stil Street, Potchefstroom, 30/6/80; Johanna Magdaldt Maria Stern née Brummer, 3/3/14, 1403030004001. O. B. Stern, P.O. Box 434, Pretoria.

7857/80—KIRSTEN, Jacoba Petronella, 15/5/37, 3705150 002015, Vuurpyllaan 18, Flimida, Klerksdorp, 17/6/80; Henry William Kirsten, 18/2/35, 3502185002005. Nasionale Gesinskamer (Edms.) Bpk., Posbus 3024, Pretoria.

8642/80ASR1B—GILLESPIE, Maria Catharina, 18/1/14, 1401180022005, Huis Immergroen, Kerkstraat, Piet Retief, 4/7/80; Carel Jacob Casper Gillespie. A. S. Botha & Kie., Posbus 136, Piet Retief.

8102/80—DU PLESSIS, Paula Theodora, 891216000 003, weduwee, Venterspoemyn, Westonaria, 28/6/80. Waks, Williams Müller Ingelyf, Posbus 208, Potchefstroom.

8684/80—ROBINSON, Andrew Schultz, 8/3/1895, 950308 5006009, widower, Bramley House, 71 Linden Road, Bramley, Johannesburg, 12/7/80. R. S. Kahanovitz, 708 Provincial Building Society Buildings, 98 Market Street, Johannesburg.

8186/80—ROBINSON, Annie Cowan, 19/12/1896, 961218 0005004, Bramley House, 71 Linden Road, Bramley, Johannesburg, 28/2/80; Andrew Schultz Robinson, 8/3/1895, 9503 085006009. R. S. Kahanovitz, 708 Provincial Building Society Buildings, 98 Market Street, Johannesburg.

8641/80—GROSS, Louis, 5/9/18, 1809055022001, 4 Sunview Mansions, Wilkoppies, Klerksdorp, 9/7/80. D. M. Kantor, 15th Floor, Life Centre, 45 Commissioner Street, Johannesburg.

8356/80—MOUTZOURIS, Basil John, 17/8/1897, 9708175 011005, 12a Jan van Riebeeck Road, Irene Park, Klerksdorp, 2/7/80. D. M. Kantor, 15th Floor, Life Centre, 45 Commissioner Street, Johannesburg.

7316/80—DU PLESSIS, Alida Magritha, 30/7/09, 090730 0015001, Hamiltonlaan 132, Brakpan, 17/6/80. Frank le Roux, V. d. Westhuizen & Levin, Posbus 116, Brakpan.

8963/80—KRUGER, Christiaan Johannes, 4/4/01, 0104045 018009, Hoewe 201, Witpoort, Pk. Schapensrust, Brakpan, 21/4/80. Frank le Roux, V. d. Westhuizen & Levin, Posbus 116, Brakpan.

9114/80—FENWICK, Arthur Rudolf, 26/11/06, 06112650 23006, Indrastraat 64, Mayfair-Wes, Johannesburg, 8/7/80; Elizabeth Isabella Fenwick, 17/10/07, 071017003600 2. Venter & Kie., Proteasentrum, Highstraat, Mayfair-Wes, Johannesburg.

6396/79—BRANDON, George, 1/1/39, 3901015085000, Tilraelaan 54, Crown Gardens, 1/12/78. Hofmeyr, Van der Merwe & Botha, Posbus 3768, Johannesburg.

8733/80—WILLCOCK, Catherina Maria, 14/9/19, 190914 0023004, Vyfde Laan 102, Mayfair, Johannesburg, 20/6/80; William James Willcock. Stabilitas Eksekuteurskamer (Edms.) Bpk., Posbus 61177, Marshalltown.

8292/80—VENTER, Elizabeth Johanna Maria, 9/7/21, 210 7090031007, Gregorstraat 018, Mindalore, Krugersdorp, 25/4/80; Daniel Andries Coenraad Venter, 15/4/18, 1804155047 008. Santamtrust Bpk., Posbus 2174, Durban.

9394/80—VERMEULEN, Catherina Wilhelmina, 23/9/1887, 103823799, S A V Fouetehuis, Fulhamweg, Brixton, 15/7/80. Santamtrust Bpk., Posbus 9411, Johannesburg.

2284/80—WASSERMAN, Reyno Eksteen, 3111165080005, Nolenestraat 32, Constantia Kloof, 13/1/80. Santamtrust Bpk., Posbus 9411, Johannesburg.

9070/80—SEYFFERT, Carolina Johanna, gebore Otto, 3/2/1888, weduwee, Hartebeesfontein, Pk. Vlakdrif, distrik Ventersdorp, 29/6/80. Santamtrust Bpk., Posbus 9411, Johannesburg.

2867/80—COETSEE, Stephanus Johannes Jacobus, 23/2/39, 3902235048000, Vanderstelhof 8, Ferrantestraat, Pk. Vanderbijlpark, 22/2/80. D. C. Crozier, Posbus 86, Pk. Amersfoort.

7498/80—PEYTON, Ernest Frank, 24/8/1897, 27 Angus Road, Bedfordview, 31/5/80; Ivy Peyton, 19/10/1899, 991019 0014002. Standardtrust Ltd, P.O. Box 933, Johannesburg.

7905/80—ESTMENT, Edward Raymond Graham, 23/9/32, 3209235019001, Plot 134, President Steyn Road, Rynfield Agricultural Holdings, Benoni, 16/5/80; Gloria Lorraine Estment, 3/4/35, 3504030025009. Standardtrust Ltd, P.O. Box 933, Johannesburg.

7654/80—WILSON, Henry John, 29/5/01, 1015295006008, 64 Morell Road, Blairgowrie, Randburg, 5/6/80; Edith Maud Wilson, born Mill, 5/11/10, 1011050010004. Mrs E. M. Wilson, 64 Morell Road, Blairgowrie, Randburg.

923/79—MACHADO, Alberto Jose Ramos, 12/7/35, 350 7125041005, 3 Hollins Road, Simmerfield, Germiston, 11/12/78; Rosa Ferreira da Silva Ramos Machado, 3/6/56, 5606 030131006. Westrust (Pty) Ltd, P.O. Box 10527, Johannesburg.

12499/79—TIMOL, Moosa Goolam Mahomed, Zulekha Timol, 81 Condor Avenue, Lenasia.

9023/80—HAYHOE, Ina Baird, Nigel Stanley, P.O. Box 46, Rosetta.

7215/80—McLAREN, Mary Ann, 13/8/1893, 93082300002 006, 7 Klippoortie Gardens, 32 Parkhill Road, Germiston, 30/5/80. R. J. Yuill, P.O. Box 52468, Saxonwold.

8995/80—BODLEY, Doris Margaret, 17/11/1896, 066130 633W, 1 Ridal Court, Vincent Park, Risidale, 14/5/80. J. S. Slater, P.O. Box 933, Johannesburg.

7997/80—FRANCOIS, Madge Lockwood, 30/3/06, 060330 0026003, 55 Mabel Street, Rosettenville, Johannesburg, 12/6/80. Standardtrust Ltd, P.O. Box 933, Johannesburg.

8463/80—O'DONOVAN, Lionel Terence, 4/9/1893, 93090 45003007, 12 Culross Road, Bryanston, 25/5/80. Standardtrust Ltd, P.O. Box 933, Johannesburg.

5020/80—NUGENT, Archibald Francis, 8/3/07, 2 Westlynne Court, First Avenue, Florida, 16/4/80; Theunissina Christina de Klerk Nugent, born Posthumus, 26/12/07, 071226 006002. Standardtrust Ltd, P.O. Box 933, Johannesburg.

8365/80—NICHOLSON, John Lionel Drummond, 28/8/09, 0908285038000, 7 St Lucia, Kirkby Road, Bedford Gardens, 30/5/80. Standardtrust Ltd, P.O. Box 933, Johannesburg.

8362/80—MOLTENO, Charles Brunette Molteno, 12/3/09, 0903125016001, Ben Trovato, Portion 29 of Swartkop, Muldersdrift, 3/6/80. Standardtrust Ltd, P.O. Box 933, Johannesburg.

8485/80-VENTER, Susara Christina, 14/8/11, 110814004 2003, Mooreweg 19, Orkney, 13/6/80; Hermanus Charel Andries Venter, 9/3/26, 2603095040001. Standardtrust Ltd, P.O. Box 933, Johannesburg.

8756/80—DOWIE, Dorothy Isabel, 20/12/10, 1012200019 002, 7 Blackheath Centre, D. F. Malan Drive, Johannesburg, 25/6/80. Barclays National Bank Ltd, P.O. Box 8000, Johannesburg.

5273/80—WEBBER, Ivy Mona Gibbard, 7/11/09, 091107 0009004, 120 Bothwell Randjesaagte, Highlands North, 5/4/80. Standardtrust Ltd, P.O. Box 933, Johannesburg.

SHEAD, David John, 14/11/33, 3311145012009, 17 Rutter Street, Witpoortjie, 12/5/80; Martha Louisa Shead, 15/9/32, 3209150022006. Barclays National Bank Ltd, P.O. Box 8000, Johannesburg.

8777/80—HENNING, Joan, 15/5/16, 1605150023005, 12 Gerrit Maritz Avenue, Dalview, Brakpan, 21/4/80. Barclays-Nasionale Bank Bpk., Posbus 8000, Johannesburg.

8404/80—WARREN, Archelaus John, 10/1/21, 210110505 2009, 160 Ivy Road, Norwood, Johannesburg, 22/6/80. Standardtrust Ltd, Library Garden Chambers, corner of President and Fraser Streets, Johannesburg.

9181/80—THOMAS, Christian Dydalief, 11/3/09, 0903115 026002, 66 Bertha Street, Turffontein, Johannesburg, 28/3/80; Ellen Thomas, 11/9/15, 1509110041000. Standardtrust Ltd, P.O. Box 933, Johannesburg.

7868/80—ROODT, Gilbert Christian, 31/1/14, 14013150 30006, 21 Petyt Road, Dunnottar, 26/5/80; Daphne Joyce Roodt, 25/10/22, 2210250037002. Standardtrust Ltd, P.O. Box 933, Johannesburg.

8460/80—MacNAB, Marie Beryl, 22/2/12, 1202220011002, 94 Seventh Street, New Township, Springs, 9/6/80. Standardtrust Ltd, P.O. Box 933, Johannesburg.

8786/80—JENNINGS, Charles Percy, 9/7/14, 1407095018 004, 111 Strubenvale, Springs, 1/6/80; Majorie Muriel Jennings, 8/1/14, 1410080022005. Standardtrust Ltd, P.O. Box 933, Johannesburg.

9580/80—GIBSON, Dorothy Lorna Mary, 3/5/13, 1305 030023008, Whitehall Hotel, 8 Abel Road, Berea, Johannesburg, 3/7/80. Standardtrust Ltd, P.O. Box 933, Johannesburg.

8574/80—FENSOME, Geoffrey Ernest, 16/6/06, 06061650 11002, 71 Beatrice Avenue, Homelake, Randfontein, 12/6/80. Standardtrust Ltd, P.O. Box 933, Johannesburg.

9005—EVENWEL, Petrus Johannes, 18/11/28, 2811185036 009, 17 Mathers Street, Rynfield, Benoni, 13/6/80; Anna Elizabeth Evenwel, 6/5/34, 3405060070008. Standardtrust Ltd, P.O. Box 933, Johannesburg.

9329/80—EVEREST, Charles Ernest, 3/12/1900, 0012035 006001, 29 Nielson Drive, Blairgowrie, Randburg, 8/7/80. Standardtrust Ltd, P.O. Box 933, Johannesburg.

9409/80—VAN ZYL, Petrus Daniel Jacobus, 24/11/1898, 9811245012, 24a Stafford Avenue, Westdene, Johannesburg, 12/7/80; Lovina Catharina Hendrina van Zyl, 15/8/04, 040 8150026008. E. F. K. Tucker Incorporated, P.O. Box 9, Johannesburg.

9178/80—SCOTT, Johanna Theodora Leiya, 31/8/1883, 331 319079W, 27 Le Cateau Road, Delville, Germiston, 23/6/80. Betty & Dickson, P.O. Box 742, Johannesburg.

9368/80—PAINE, Henry Howard, 22/8/1883, 331487791W, 10 Parklane Mansions, Empire Road, Johannesburg, 18/6/80. Barclays National Bank Ltd, P.O. Box 2036, Johannesburg.

9627/80—STEGMANN, Frederik Koenraad, 2/2/1899, 990 2025001007, 11 Linden Hill Gardens, Third Avenue, Linden, Johannesburg, 7/6/80. Barclays National Bank Ltd, P.O. Box 2036, Johannesburg.

7793/80—ROSS-HARDING, Vivienne, S. H. Moore, Private Bag X3, Braamfontein, Johannesburg.

9819/80—McCULLOCH, Agnes, 10/10/1886, 31215748, Randjeslaagte Old Age Home, Highlands North, Johannesburg, 28/6/80. Cliffe Dekker & Todd, P.O. Box 3382, Johannesburg.

5119/80—THOMSON, Jean Lascelles, 25/2/17, 0702250032 000, widow, 120 De Villiers Street, Kenilworth, Johannesburg, 28/3/80. Cliffe, Dekker & Todd, P.O. Box 3382, Johannesburg.

10005/80—GRIEVE, Sarah Mary Angel, 6/5/1885, 850506 0003001, 25 Private Road, Linksfield Ridge, Johannesburg, 17/5/80. Cliffe, Dekker & Todd, P.O. Box 3382, Johannesburg.

9881/80—HOLLIS, Peter Henry, 1/10/54, 5410015178003, 34 Pretoria Street Extension, Highlands North Extension, Johannesburg, 25/4/80. Cliffe Dekker & Todd, P.O. Box 3382, Johannesburg.

8505/80—FARINHA, Francisca Pereira, 8/7/1900, 355670 937, Robertson Old Age Home, Randfontein, 10/6/80. Barclays National Bank Ltd, P.O. Box 8000, Johannesburg.

10274/80—JACOBS, Alwyn James, 6/9/04, 0409065007000, 37a 11th Avenue, Parktown North, Johannesburg, 25/7/80. Cliffe, Dekker & Todd, Fourth Floor, Allied House, 29 Rissik Street, Johannesburg.

6441/80—PIZZEY, Cassandra Ellen, 3/1/1893, 331264573 W, Randjeslaagte, Johannesburg Jubilee Memorial Rest Home, Highlands North, Johannesburg, 1/5/80. Cliffe, Dekker & Todd, P.O. Box 3382, Johannesburg.

6559/80—RUBIN, Anna, 7/8/1888, 331424263W, 3 Doveton Road, Parktown, Johannesburg, 11/4/80. Mrs I. R. Breiner, 173 Commissioner Street, Johannesburg.

7467/80—CUNNINGHAM, James Charles, 18/1/1899, 9910185007003, 28 Blenheim Court, Atholl Street, Highlands North, Johannesburg, 9/6/80; Audrey Myrtle Decima Cunningham. Van Huisteyn, Duthie & Saner, P.O. Box 46, Johannesburg.

5806/80—MULDER, Jeremias Jesaies Jacobus, 16/2/10, 100 2165004008, Pistoriusstraat 4, Middelburg, 22/5/80; Margaretha Petronella Mulder, gebore Kockemoer, 24/4/17, 170424 0002002. Volkskas Bpk., Posbus 383, Pretoria.

9461/80—JANSE VAN RENSBURG, Pieter Hendrik, 23/1/1883, 9301235005009, Wilgestraat 31, Nelspruit, 18/6/80; Louisa Jacoba Janse van Rensburg, 3/9/1898, 9809030009000. Volkskas Bpk., Posbus 383, Pretoria.

9341/80—JONCK, Salomina, 11/2/15, 356360633W, Micastraat 147, Proklamasieheuwel, Pretoria, 18/7/80. Volaskas Bpk., Posbus 383, Pretoria.

9112/80—FRASER, Paul Hartogh, 29/4/06, 0604295019003, Bruarfosweg 65, Valhalla, 11/7/80; Elizabeth May Fraser, 1/5/14, 1405010023000. Volkskas Bpk., Posbus 383, Pretoria.

8790/80—LOURENS, Anna Sophia Catharine, 29/12/23, 2312290040002, Aeroweg 12, Valhalla, Pretoria, 28/6/80. Volkskas Bpk., Posbus 383, Pretoria.

9759/80—DE VRIES, Hermanus, 1/5/38, 3805015024002, Jasmynlaan 413, Silverton, 1/6/80; Martha Johanna Magdalena de Vries, 19/3/26, 2603190013002. Volkskas Bpk., Posbus 383, Pretoria.

9073/80—SEIDEL, Gerhard Albin Max, 15/8/08, 080815 5029008, Roderickweg, Lynnwood, Pretoria, 26/5/80. Volkskas Bpk., Posbus 383, Pretoria.

7510/80—DE VILLIERS, Daniël Johannes Joubert, 14/8/14, 0408145028002, 26ste Laan 477, Villieria, Pretoria, 1/6/80. Volkskas Bpk., Posbus 383, Pretoria.

9886/80—LABUSCHAGNE, Pieter Willem Petrus Johannes, 13/8/37, 3708135031008, Huis 68, Landau, 26/6/80; Anna Elizabeth Labuschagne, gebore Matthysen, 7/5/42, 42050700 28007. Volkskas Bpk., Posbus 383, Pretoria.

9518/80—OOSTHUIZEN, Catharina Cornelia, 21/3/11, 1103210003001, Brixtonoustehuis, Fulhamweg 1, Brixton, Johannesburg, 24/6/80; Jacobus Marthinus Oosthuizen, 6/12/08, 0812065005009. Standardtrust Bpk., Posbus 933, Johannesburg.

9486/80—BARNARD, Johannes Jochemus Joubert, 2/4/24, 2404025003007, Haarlemstraat 52, Westonaria, 22/[illegible]/80; Annette Freda Barnard, gebore Combrinck, 15/3/35, 350315 0049005. Standardtrust Bpk., Posbus 933, Johannesburg.

NATAL

3891/80—GERMISHUIZEN, Kenneth Robert, 14/8/45, 4508145008007, Crownpointwoonstelle 305, Prinestraat, Durban, 15/6/80; Petronella Hendrina Germishuizen, 25/4/43, 4304250090001. Santamtrust Bpk., Posbus 4680, Pretoria.

2342/80—CONRADIE, Adriana, 1/10/04, 0410010016005, Berkeley Hotel, Old Fort Road, Durban, 11/4/80.

2361/79—THEUNISSEN, Anna Susanna Elsie Petronella, 24/7/01, 010724001100, widow, 6 Third Avenue, Malvern, Durban, 11/5/79. H. J. Bekker & Co., P.O. Box 3312, Durban.

3801/80—MATTHEWS, John Abraham, 11/2/27, 270211 5035007, 9 Tennis Court, Tenniscowles Road, Umbilo, Durban, 17/7/80. Barclays National Bank Ltd, P.O. Box 3409, Durban.

3741/80—CRICK, Leslie William, 4/12/20, 2012045054007, 14 Weiba Park, Old Main Road, Amanzimtoti, 22/6/80; Hewlett May Crick, 13/7/29, 2907130057007. Barclays National Bank Ltd, P.O. Box 3409, Durban.

3790/80—DAVID, Winifred Ruth, 8/8/08, 0908080015005, 1 Glenwood Heights, Bexmore Place, Durban, 30/6/80. Barclays National Bank Ltd, P.O. Box 3409, Durban.

3809/80—PRELLER, Karel Frederick Stola, 5/6/14, 140 6055018004, 18 Valerie Road, Hillary, 13/7/80. Byron & Long, 374 Smith Street, Durban.

3625/80—MITCHELL, James Earnshaw, 28/1/07, 070128 5017102, 1301 Grosvenor Court, Snell Parade, Durban, 16/7/80. Durban Board of Executors & Trust Company Ltd, P.O. Box 4743, Durban.

5973/79—GUMEDE, Bethuel, -/-/43, 140678428, Piet River Farm, Amaoti, Inanda, 13/10/79. David & Co., P.O. Box 339, Stanger.

2458/80—BASMATHY, -/-/12, 800332863A, 4 Jackson Street, Stanger, 16/4/75; Harripersad Nibhur, -/8/14. David & Company, P.O. Box 339, Stanger.

3360/80—DICKSON, Jean Olive, 30/8/10, 1008300030006, 55 Kingsway House, 111 West Street, Durban, 28/6/80.

3976/80—DUGMORE, Darell Walter, 16/6/24, 24061650 05007, 9 Trent Place, Westville, 24/7/80. Mooney Ford & Partners, P.O. Box 442, Durban.

3578/80—DANNHAUSER, Jurie Marthinus, 4/9/11, 1109 045008008, 2 Tecoma Avenue, Westbrook, Tongaat, 22/6/80. Garlicke & Bousfield Inc., P.O. Box 223, Durban.

3849/80—GRIMWOOD, Norman Vincent, 15/5/11, 1105 5029008, 584 Currie Road, Durban, 27/7/80. Goldby, Compton & MacKelvie, P.O. Box 1473, Durban.

3747/80—KAVANAGH, Ignatius Patrick, 27/9/14, 140927 5032003, 69 Brackenhill Road, Waterfall, 7/7/80. Lester Hall Ewing & Swan, P.O. Box 52, Hillcrest.

1796/80—CAMPBELL, Agnes Maud, 6/11/22, 211642977, 36 Finsbury Court, West Street, Durban, 23/3/80. Leandy & Partners, P.O. Box 35, Durban.

3225/80—ALLEN-WRIGHT (Allen Allen), Pricilla Maud, 4/7/1898, 211412439W, 4 Sherwood, 219 Davenport Road, Durban, 27/6/80. Leandy & Partners, P.O. Box 35, Durban.

3796/80—JACKSON, Alfred, 25/2/1894, 9402255001009, Braemar Nursing Home, Pinetown, 15/6/80. Leandy & Partners, Fifth Floor, JBS Buildings, 78 Field Street, Durban.

2888/80—PORTER, Jan, 21/9/18, 1809215039010, 13 Michan Place, Sparks Estate, 10/5/80; Agnes Porter, 23/12/21, 211223005701l. Robert E. Levitt & Company, P.O. Box 1726, Durban.

5258/79—GOVENDER, Shunmugam (Shunmugam Narsimulu), 13/10/32, 800304066, House 26, Road 134, Unit One, Chatsworth, 24/7/80; Valliamma, 800435290. M. J. Naidoo, Rapiti & Rapiti, 50 C N R House, 22 Cross Street, Durban.

1961/80—NAVALKISSOOR, Mahadaye (Mahadhayee and Mahadaye), -/7/17, 800301745, 64 Spencer Road, Clare Estate, Durban, 31/7/67; Navalkissoor, 17/12/16, 800318437A. P. R. Maharaj & Co., Suite 10, First Floor, Tivoli House, 110 Victoria Street, Durban.

3885/80—CRUIKSHANK, Robert William, 9/5/1899, 9905 095010006, Glenbrook Farm, Shakaskraal, 24/7/80; Constance Anna Cruikshank, born Crooks, 20/5/04, 0405200003003. C. A. Cruikshank, 11 Jerome Drive, Kloof.

3335/80—MAYHEW, John Craft Saunders, 5/10/20, 201 0055034000, 26 Third Street, Hillary, 25/6/80; Vera Patricia Mayhew, born McGennis, 28/4/30, 3004280022004. Clemmans & Johnston Inc., Suite 201, Permanent Buildings, 343 Smith Street, Durban.

3372/80—WINTERTON, Alice Cassandra, 30/4/1882, 211 615469, Orchard Lea, 22 Clyde Avenue, Durban, 22/6/80. Livingston Doull & Winterton, P.O. Box 180, Durban.

4294/79—DE SWARDT, Anna Johanna, 16/11/44, 44111 80009008. Four Paths Estate, P.O. Box 21, Amatikulu, 3/8/79. Schreiber, Smith & Company, First Floor, Arthurs Buildings, 10 Union Street, Empangeni.

2939/80—WRIGHT, John Leech, 3/9/12, 1209035006002, 15 Kings Lodge, Kings Road, Pinetown, 2/6/80; Mary Bruce Wright, 2/12/14, 1412020002008. Barclays National Bank Ltd, P.O. Box 3409, Durban.

3387/80—CLARK, Eric William, 1/9/14, 140901015010, 302 Amtoti, 20 Turner Street, Amanzimtoti, 7/7/80. Barclays National Bank Ltd, P.O. Box 3409, Durban.

3182/80—TROEDSON, Ronald Albert, 19/2/22, 22021950 31000, 90 Danville Avenue, Virginia, Durban North, 12/7/80; Patricia Mary Troedson. Barclays National Bank Ltd, P.O. Box 3409, Durban.

3695/80—HOWE, Mary Robertson, 14/11/03, 0311140009 102, 101 Southgate, Erskine Terrace, Durban, 7/7/80. Barclays National Bank Ltd, P.O. Box 3409, Durban.

3772/80—CHANCHIAH, 11/9/14, 800416021, Nonoti Farm, Darnall, District of Lower Tugela, 1/7/80; Subbammah. Laurie C. Smith, De Broglio Inc., P.O. Box 46, Stanger.

3643/80—PRIVETT, Jessie Dorothy, 4/10/08, 081004002 4004, 1704 Sanlam Park, 16 Beach Road, Amanzimtoti, 14/7/80. David Strachan & Tayler, P.O. Box 1858, Durban.

4007/80—ABRAMSON, Betty, 16/6/08, 0806160029005, 63 Brianmore, 72 St George's Street, Durban, 17/7/80. J. H. Nicolson Stiller & Geshen, P.O. Box 641, Durban.

3751/80—POWLES, William Henry, 19/9/1889, 89091950 01007, Essendene Private Hotel, 7 Poynton Place, off Musgrave Road, Durban, 21/7/80. J. H. Nicolson Stiller & Geshen, P.O. Box 641, Durban.

3807/80—PETSCH, Eunice, 14/6/1898, 9806140005001, 2 Shcamar, 91 Manning Road, Durban, 23/7/80. Sylvia Oversby, 6 Newlyn Centre, 40 Newport Avenue, Glenashley, 21 days.

3836/80—BALCOMB, Ian Ronald, 1/9/26, 2609015025006, Groutville, 25/7/80. A. M. Roberts & Chaplin, P.O. Box 136, Umhlali.

4714/79—SOOKDHEYIA, 16/5/09, 800248247, Inanda, 14/10/72. Pradeep Singh & Company, First Floor, Greenfield Towers, corner of Moss and Wick Streets, Verulam.

251/80—HARRIS, Thomas Jayaraj, 31/12/36, 800314059 A, 41 Dawnview Road, Silvergien, Durban, 10/10/79. Devi Pillay & Co., Suite 414/418, Victoria Heights, 56 Victoria Street, Durban.

3798/80—KISSOONDEYI, 26/9/28, 80041779180, widow, 29 Parlock Drive, Newlands, Durban, 20/7/80. J. N. Singh & Radhi Singh, P.O. Box 3627, Durban.

3813/79—PURDY, Cornelia Agnes, 27/9/1891, 7 Princes Park Mansions, Borrow Street, Bulawayo, Zimbabwe, 28/12/78. Standardtrust Ltd, P.O. Box 2743, Durban.

3852/80—HINES, Ivan Reginald, 7/7/11, 1112075036006, 22 Maple Road, Durban, 6/7/80; Marguerite Elizabeth Hines, 1/5/13, 1305010045005. Standardtrust Ltd, P.O. Box 2743, Durban.

3412/80—PELSER, Hendrik Jacobus, 25/3/13, 1303255034 008, 11 Sable Flats, Echo Road, Pietermaritzburg, 21/6/80. Standardtrust Ltd, P.O. Box 917, Pietermaritzburg.

3863/80—MUNRO, Hector George, 21/5/1897, 9705215006 003, 13a Wilkes Road, Prestbury, Pietermaritzburg, 25/6/80. Standardtrust Ltd, P.O. Box 917, Pietermaritzburg.

3850/80—GUSH, Harold, 22/8/1898, 9808225015004, 3 Willow Lane, Wintersklooof, 2/7/80. Standardtrust Ltd, P.O. Box 917, Pietermaritzburg.

1075/80—BOWKER, Norman Arthur, 22/6/05, 186375005, Surf Spray, Marina Beach, 25/10/79. Standardtrust Ltd, P.O. Box 917, Pietermaritzburg.

2406/80—JORDAAN, Johannes Louis Wilhelmus, 25/8/16, 1608255041005, Mayfair Hotel, Marine Drive, Margate, 6/5/80. Standardtrust Ltd, P.O. Box 2743, Durban.

3520/80—WARREN, Basil Colin, 26/8/28, 2808265013007, Cottage 48, Gledhow Sugar Mill, Stanger, 13/6/80; Mavis Louise Maude Warren, née Fouche. Standardtrust Ltd, P.O. Box 2743, Durban.

1890/80—LINDSAY, Robert Alexander, 10/2/1900, 960011 639, Durban, 13/3/80. Standardtrust Ltd, P.O. Box 2743, Durban.

3855/80—JACK, Peter Richie, 2/2/20, 2002025040100, 9 Somers Road, Clarendon, Pietermaritzburg, 5/7/80. Standardtrust Ltd, P.O. Box 917, Pietermaritzburg.

3908/80—SILVESTER, Silva Thomas, 3006285011007, 51/52 Park Gate, St Andrew's Street, Durban, 8/7/80; Hazel Silvester, born Nofal. Standardtrust Ltd, P.O. Box 2743, Durban.

3654/80—CARBONI, Fortunato Angelo, 25/7/1891, 910 7255004008, Musgrave Nursing Home, 184 Musgrave Road, Durban, 13/7/80. Palmers Trust Investments and Estate Administrators Ltd, P.O. Box 135, Durban.

3276/80—ZEBERT, Johannes Hendrik, 15/2/11, 110215500 9007, 35 Prospect Road, Umbilo, Durban, 9/6/80; Johanna Elizabeth Zebert. Syfrets Trust and Executor S.A. Ltd, P.O. Box 135, Durban.

3396/80—BAURISTHENE, Louis Gustave, 11/6/07, 0706 115022107, 18 Lobombo Hof, Botanic Gardens Road, Durban, 29/6/80; Maria Mia Bauristhene. Palmers Trust Investments and Estate Administrators Ltd, P.O. Box 135, Durban.

3860/80—MATTHEWS, Alice Olga, 28/10/17, 1710280005 102, 12 Vista Road, Waterfall, Hillcrest, 18/7/80. Syfrets Trust and Executor S.A. Ltd, P.O. Box 135, Durban.

3866/80—NOTTMAN, Aileen Gladys, 23/7/03, 906 Main Road, Moseley, Durban, 9/7/80. Syfrets Trust and Executor S.A. Ltd, P.O. Box 135, Durban.

3774/80—MAUER, Stanley Robert, 7/6/08, 0806075011007, 36 Coemore Road, Bellair, Durban, 11/7/80; Fanny Sybil Mauer. Palmers Trust Investments and Estate Administrators Ltd, P.O. Box 135, Durban.

2816/80—DOYLE, Stella, 30/12/37, 3712300061006, 8 Alexander Drive, Winston Park, Pinetown, 19/4/80; Brian Michael Doyle. Syfrets Trust and Executor S.A. Ltd, P.O. Box 135, Durban.

3873/80—SHELDON, Aileen Patricia, 17/3/07, 0703170023 005, 42 Moreton Hall, 253 North Ridge Road, Durban, 16/7/80. Palmers Trust Investments and Estate Administrators Ltd, P.O. Box 135, Durban.

2739/80—KHUMALO, July (Johannes), approximately 1920, 1122270757, B390 Township of Umlazi, P.O. Ntokozweni, 17/1/80. Halse Havemann & Lloyd, P.O. Box 343, Pinetown.

3415/80—RYAN, Francis Kearns, 12/12/22, 2212125001007, 7 Macleroy Road, Northern Park, Pietermaritzburg, 19/6/80; Maisie Findlay Ryan, 20/4/33, 3304200055005. Bale Green & Morcom, 28 Chancery Lane, Pietermaritzburg.

3646/80—BANKS, Reginald Alfred, 10/5/1890, 900510500 2000, 40 Guildford Road, Durban, 6/7/80. Shepstone & Wylie, P.O. Box 205, Durban.

3615/80—RANGILA, Amina, 3/1/45, 800254411A, 83 Simla Street, Shallcross, Natal, 1/1/80; Mahomed Haniff Abdool, 15/6/39, 39061559009058. Moolla & Singh, Suite 4, Aboo's Buildings, 270 Road 201, Chatsworth.

3547/80—DORASAMY (Dorasamy Murugan and Dorasamy Frank and Dorasamy Pillay), 16/1/12, 1201165043053, 51 Tarndale Avenue, Asherville, Durban, 21/4/80; Muniammah Murugan, 20/6/20, 2006200070050. Brebuyck & Company, Second Floor, JBS Buildings, 78 Field Street, Durban.

3912/80—WILLS, Evelyn Muriel, 14/5/1895, 9505140007 005, Orchard Lea, Clyde Avenue, Durban, 25/7/80. Chapman Dyer Incorporated, P.O. Box 81, Durban.

2757/80—EDWARDS, Jack Arthur, 16/7/17, 1207165040 007, 1 Kingfisher Street, Cato Ridge, 2/6/80. M. G. Mortimer & Company, First Floor, Southern Trident House, 58 Field Street, Durban.

2946/80—SMITH, Clifford Ronald Richard, 10/3/28, 280 3105064005, 19 Campbell Road, Durban, 16/6/80; Wendy Ada Smith, 29/11/34, 3911290071005. Chapman Dyer Incorporated, P.O. Box 81, Durban.

3587/80—DAVIES, Marjorie Alice, 24/3/22, 042942136, 5 Monsonia Court, Kenneth Gardens, Durban, 14/7/80; Thomas Grahame Davies, 4/11/13, 1311045024007. Chapman Dyer Incorporated, P.O. Box 81, Durban.

3893/80—KINAHAN, Cecil Frank, 24/2/27, 7 Ipiti Road, Kloof, 4/7/80. Wartski, Greenberg, P.O. Box 2188, Durban.

3663/80—PORTER, Philip Gossman, 28/2/08, 0802285013 008, Churchill Avenue, Sunwich Port, P.O. Anerley, 11/7/80; Eileen Doreen Porter, 14/1/15, 1501140010007. Barclays National Bank Ltd, P.O. Box 3409, Durban.

3467/80—LANG, Janet Moyra, 28/7/12, 1494011206, 53 Broadway Court, Broad Street, Durban, 4/7/80. Barclays National Bank Ltd, P.O. Box 3409, Durban.

3693/80—HARRIS, Mabel Alice, 2/2/05, 309505479, 32 Lynn Avenue, Glenashley, Durban, 17/7/80. Barclays National Bank Ltd, P.O. Box 3409, Durban.

2135/80—RAHAMAN, Abdul Hamid, 29/6/32, 80000388A, Flat 4, Commilla Court, Derby Road, Durban, 11/3/80. Mahomedy & Manjee, First Floor, Goodhope Centre, 92 Queen Street, Durban.

3420/80—SOOKNUNDAN, Amarchand, 27/10/35, 351027 5089055, House 49, Road 603, Arena Park, Chatsworth, 16/6/80; Krishnawathee, 13/5/38, 800377671A. Menkin & Levy, P.O. Box 2497, Durban.

3068/80—BARROW, George Albert, 24/1/1899, 990124501 2000, Mutual Haven, 51 East Street, Overport, Durban, 27/5/80. K. E. Wilcock, 102 Medical Centre, Crompton Street, Pinetown.

1324/80—HIBBERD, Ella Madeline, 14/2/1882, 820214 0001003, Cairns, Australia, 17/1/80, Price Waterhouse, P.O. Box 1049, Durban.

4286/79—NICOL, Duncan McDonald, 13/6/15, 15061350 32006, Gingindhlovu, 6/7/79. W. E. White, P.O. Box 131, Eshowe.

2840/80—LIMBADA, Rasull, -/-/06, 800354887A, 2 Third Avenue, Isipingo Beach, 29/12/79. Farouk Vahed & Company, 238 Goodhope Centre, 92 Queen Street, Durban.

3679/80—DESAI, Mahomed, 18/6/20, 800418048, 92 Clayton Road, Asherville, Durban, 28/6/80; Amina Desai, 6/6/21, 800426865A. Farouk Vahed & Company, 238 Goodhope Centre, 92 Queen Street, Durban.

3828/80—BALL, Beverley Jane, 10/9/47, 4709100080003, 54 Grooteschuur, 2 Erskine Terrace, Durban, 18/7/80. Thorpe & Hands, Suite 2522, 320 West Street, Durban.

3065/80—RAUBENHEIMER, Heinrich, 21/10/20, 2010211 9006005, 271 Faerie Glen Road, Margate, 8/6/80; Emmerentia Hester Johanna Raubenheimer, 21/4/17, 1704210020001. Santamtrust Ltd, P.O. Box 2174, Durban.

3712/80—VILJOEN, Boukje, 27/3/18, 1803270033000, 5 St Ives Road, Bellair, Durban, 4/7/80. Santamtrust Ltd, P.O. Box 2174, Durban.

3366/80—MULLER, Spencer Wilshire, 30/11/53, 531130 5004000, 96 Bierbaum Street, Manors Park, New Germany, 7/6/80. Santamtrust Ltd, P.O. Box 2174, Durban.

2546/80—NEL, Louis Jocobus, 27/5/40, 4005275039001, 26 Raymond Drive, Pietermaritzburg, 27/4/80; Priscilla Louisa Nel, 19/10/44, 4410190033008. Santamtrust Ltd, P.O. Box 2174, Durban.

3839/80—BEGG, Eric, 4/3/06, 138 Woodlands Road, Hillary, 11/9/80; Mary Isobel Begg, 27/6/09, 0906270017005. Santamtrust Ltd, P.O. Box 2174, Durban.

3868/80—PAYNE, Edgar Palph, 29/7/36, 3607295063019, 1 Cinnamon Place, Eastwood, Pietermaritzburg, 8/7/80; Dorothy Mary Joan Payne, born Montague, 27/12/41, 007717 557C. Santamtrust Ltd, P.O. Box 2174, Durban.

3814/80—VENTER, Fabriel Daniël Jacobus, 25/11/08, 081 1255011009, 21 Aylesford Road, Stanger, 25/6/80; Helena Cecilia Venter, born Houston McMillan, 29/3/16, 16032900 16005. Santamtrust Ltd, P.O. Box 2174, Durban.

3838/80—BATTISCOMBE, Marie, 10/9/06, 0609100010006, 16 St John's Road, Southport Extension, 27/6/80. Standardtrust Ltd, P.O. Box 2743, Durban.

2634/80—HILL, Ruby Blake, 5/10/1889, Village of Happiness, Margate, 1/5/80. Standardtrust Ltd, P.O. Box 2743, Durban.

3787/80—BOONZAAIER, Petrus Lukas, 20/10/61, 160920 0021001, Kempstraat, 26/6/80. Volkskas Bpk., Posbus 918, Pietermaritzburg.

COOPER, Fay Beatrice, 3/10/41, 4110030075009, 76 Buffel Street, Newcastle, 25/7/80; Donald Peter Cooper, 13/9/36, 3609135068000. Barclays National Bank Ltd, P.O. Box 381, Pietermaritzburg.

BESTER, Johanna Susanna Sophia, 6/11/1894, 9411060001 005, Paulpietersburg, 2/7/80. Barclays National Bank Ltd, P.O. Box 381, Pietermaritzburg.

ERASMUS, Harm Petrus, 10/1/10, 1001105031006, 28 Dammann Street, Glencoe, 23/7/80; Hendrina Magdalena Erasmus. Barclays National Bank Ltd, P.O. Box 381, Pietermaritzburg.

WHEELER, Margaret Smith, 29/11/21, 2111290034001, 100 Main Street, Howick, 14/7/80. Barclays-Nasionale Bank Bpk., Posbus 381, Pietermaritzburg.

COOPER, Ethel Louisa, 7/11/1898, 245011762W, 42 Raldor Flats, Loop Street, Pietermaritzburg, 4/8/80. Barclays-Nasionale Bank Bpk., Posbus 381, Pietermaritzburg.

LOURENS, Willem Jacobus, 10/2/10, 12 Oak Avenue, Cleland, Pietermaritzburg, 25/7/80; Hester Sussanna Lourens. Barclays-Nasionale Bank Bpk., Posbus 381, Pietermaritzburg.

3819/80—CARNESON, Iris Blanche, 17/7/05, 245045954 W, 79 Mayors Walk, Pietermaritzburg, 14/6/80; Albert Anthony Carneson, 0707215021007. Graham Harrison & Company, 220 Berg Street, Pietermaritzburg.

3788/80—BOSHOFF, Stephanus Johannes Van der Westhuizen, 7/4/15, 1504075028001. Kranshoek, Pk. Besters, distrik Kliprivier, 8/7/80; Anna Johanna Catharina Boshoff, gebore Potgieter, 26/5/23, 2305260011003. Volkskas Bpk., Posbus 918, Pietermaritzburg.

2514/80—MAUREL, Marie Antoine Pierre, 13/6/09, 09061 35011003, 517 Redfern Flats, 54 Alfred Road, New Germany, 9/5/80. Marie Patrick Francois Joseph Maurel, 52 Cato Crescent, Amanzimtoti.

2553/80—SINGH, Jabhar, 27/12/24, 2412275066053, Upper Hill Farm, Ifafa, South Coast, 30/7/78. Franz, Redpath & Barry, P.O. Box 32, Port Shepstone.

997/80—MAHER, Petrus Christoffel, 11/3/16, 211502156, 152 Harbour View Avenue, Montclair, Durban, 23/1/80. Franz, Redpath & Barry, P.O. Box 32, Port Shepstone.

3870/80—REID, Agnes Henderson, 11/6/1896, 9606110008 005, 184 Berg Street, Pietermaritzburg. Marriott & Brodie, P.O. Box 1465, Durban.

3261/80—KEMP, Frederick Francis Cornelius, 27/9/16, 160 9275040001, 49 Mills Circle, Pietermaritzburg, 27/6/80; Edith Mary Kemp, 2/12/24, 2412020021007. Marriott & Brodie, P.O. Box 1465, Durban.

1217/80—GREGSON, Barbara Glen, 18/1/05, Townhill Hospital, Pietermaritzburg, 24/1/80. Olga Burt, P.O. Box 326, Richmond.

2600/80—STALKER, Eveline Ferreira, 20/1/1884, 8401200 001008, spinster, Hillcrest Hospital, Hillcrest, 27/5/80. Smythe & Company, P.O. Box 104, Pietermaritzburg.

3749/80—NICOL, David Herman Adolph, 25/1/06, 060125 5012002, Braemar, Nottingham Road, 13/7/80. Dix, Boyes & Co.

3743/80—DEVACHANDER RAMOUTHAR (Devachander and Devachand Ramouthar), 17/6/30, 800237111A, 5 Queen Street, Pietermaritzburg, 16/7/80; May Ramouthar, 7/11/35, 800400524A. L. F. Forsyth, P.O. Box 18, Pietermaritzburg.

2234/80—PIETERSEN, John, 17/8/25, 2508175059005, Dunvegan, Mooreweg, Durban, 24/4/80. Viljoen, Pienaar & Du Toit, Stafmayerhuis, Beachlaning, Durban.

3603/80—CADMAN, Gwendoline Elsie, 10/4/08, 08041000 36008, 42a Raven Street, Pietermaritzburg, 2/7/80. Errol W. Stowell & Co., P.O. Box 33, Pietermaritzburg.

2884/80—MIENY, Iasias Jacobus, 29/7/1900, 0007295016 005, voorloorlede, Centenary Home for Aged Men, Bartleweg, Umbilo, Durban, 27/5/80. H. J. Bekker & Kie., Posbus 3312, Durban.

3232/80—JUTA, Winifred Yorke, 16/4/10, 1004160001005, Munster, 26/6/80. Scott Brown & Tunnell, P.O. Box 1675, Johannesburg.

3047/80—MJWENI, Daniel, 8/5/17, 2208942, Umsinsini Farm, Umzumbe, 2/4/80. Rajah, Pillay & Company, P.O. Box 194, Port Shepstone.

2947/80—SOOKRAJI, 10/2/19, 800436326A, 3 Ladhoo Road, Ladysmith, 6/6/80. C. A. Botha & Partners, P.O. Box 28, Ladymith.

3688/80—BELL, Desmond Harrie (Harry) Gilmour, 29/10/13, 1310295006003, Lot 202, Gall Road, Southport, 27/6/80; Margaret Helen Bell, 20/6/11, 1106200035008, Parry, Foulis & Grobler, P.O. Box 73, Port Shepstone.

3080/80—CUMBER, Herbert Charles Edward, 1/4/07, 070 4015025007, P.O. Village of Happiness, 5/6/80. Kent & Kent, P.O. Box 205, Margate.

ORANJE-VRYSTAAT · ORANGE FREE STATE

1644/80—MARX, Hester Anna Margaretha, 4/7/1891, 910 704, Leliesdal, distrik Theunissen, 21/7/80. F. B. Coetzer, Posbus 170, Theunissen.

1608/80—GERBER, Cecilia Maria, 028773015W, widow, 9 Opperman Street, Welkom, 17/7/80. Daly & Neumann, P.O. Box 799, Welkom.

1648/80—HATTINGH, Hester Maria, 19/1/1896, 96011900 14007, Barnesstraat 9a, Bloemfontein, 5/8/80. S. J. Haddad & G. M. Hattingh, Posbus 1177, Bloemfontein.

1635/80—LEE, Telford Richard, 21/7/28, 2807215010006, Mervitt House 18, Kroonstad, 2/8/80. Grunow & Grunow, Posbus 23, Hennenman.

2387/79—COETZEE, Johannes Augustinus, 18/11/51, 5111 185086006, 16 Geda Court, Welkom, 3/11/79. Andrews & Company, P.O. Box 595, Welkom.

1338/80—VAN HEERDEN, Andries Johannes Gerhardus, 8/10/17, 1710085018003, Benaderylaan 100, Bloemfontein, 30/6/80. Naude & Van de Wall, Posbus 153, Bloemfontein.

1665/80—DE VILLIERS, Cornelis Johannes du Preez, 8/4/22, 2204085012009, Wonderfontein, distrik Vredefort, 4/8/80. Naude & Van de Wall, Posbus 153, Bloemfontein.

1479/80—VAN ZYL, David Hendrick, 14/4/07, 070414500 4005, Brandstraat 13, Theunissen, 16/7/80; Rosina van Zyl, gebore Heinenman, 6/12/12, 1212060045002. Barclays-Nasionale Bank Bpk., Posbus 1714, Bloemfontein.

1254/80—COETZER, Petrus Albertus, 7/12/18, 181207500 3001, Sammelstraat 11, Wilgepark, Harrismith, 20/6/80; Anna Louisa Coetzer, gebore Kriel, 11/8/21, 2108110058004. Barclays-Nasionale Bank Bpk., Posbus 1714, Bloemfontein.

1398/80—MOSTER, Johanna Ethrecia, gebore Naude, 24/7/1896, 9607240006000, Bronkhorstfontein, Lindley, 6/7/80. Barclays-Nasionale Bank Bpk., Posbus 1714, Bloemfontein.

1361/80—COLLETT, Sydney James, 17/10/08, 0810175014 002, Tweespruitlandbouskool, Tweespruit, 10/7/80; Cathleen Johanna Collett, gebore Brown, 26/9/14, 460613006W. Barclays-Nasionale Bank Bpk., Posbus 1714, Bloemfontein.

1492/80—MIENIE, Marthinus Frederik, 13/10/11, 111013 5024004, Oranjestraat 16, Zastron, 15/7/80; Susara Johanna Mienie, gebore Hattingh, 10/8/08, 0808100017009. Roome & Malan, Posbus 10, Zastron.

1261/80—SMITH, Thomas Petrus, 7/8/54, 5408075032001, Baileystraat 59, Reitzpark, Welkom, 19/6/80. Viljoen Louw Bartel & Vennote, Posbus 818, Bloemfontein.

1170/80—VAN DER WALT, Izak David Frederick Johannes, 18/2/16, 1602185015007, Lilaclaan 5, Wilgehof, Bloemfontein, 14/6/80; Petronella Adriana van der Walt, 25/4/29, 2904250019008. Horwitz, Bock & Van Es, Posbus 670 en 2634, Bloemfontein.

158/80—AULD, James Alastair Bentley, 11/11/08, 081111 5019002, 3 Friesland Crescent, Noordhoek, Bloemfontein, 27/7/80. McIntyre & Van der Post, P.O. Box 450, Bloemfontein.

1944/76—GRADIDGE, Henry John, 24/2/39, 435744949, Ossewaweg 8, Virginia, 10/9/76; Johanna Maria Nel, gebore Fourie, voorheen Gradidge, 8/4/46, 354827437, Grunow Grunow & Maree, Posbus 123, Virginia.

1528/80—CLARK, Gerald James, 4/11/49, 4911045072 000, Vanwyklouwstraat 26, Welkom, 4/7/80; Alestha Cecilea Clark, gebore Coetzer, 21/5/53. Santamtrust Bpk., Posbus 2413, Bloemfontein.

1455/79—VENTER, Bernardus Gerhardus, 29/10/16, 161 029020007, Delareylaan 68, Bloemfontein, 7/7/79. Santamtrust Bpk., Posbus 2413, Bloemfontein.

1529/80—CLASSEN, Linden Arthur Johannes, 9/1/48, 480 1095006004, Milnerweg 35A, Welkom, 6/7/80; Sheilla-Ann Classen, gebore Radloff. Santamtrust Bpk., Posbus 2413, Bloemfontein.

1524/80—VAN DER MERWE, Izak Frederik, 10/7/23, 3307105038000, Truterstraat 12, Kroonstad, 13/7/80. Santamtrust Bpk., Posbus 2413, Bloemfontein.

1495/80—NEL, Gerhardus Stephanus, 6/3/30, 300306501 4004, Boomstraat 26, Zastron, 21/6/80; Jacoba Francina Nel, gebore Kleinhans, 18/4/32, 3204180004009. Volkskas Bpk., Posbus 323, Bloemfontein.

1504/80—BOTHA, Anna Christina Margaretha, gebore Willer, 27/7/10, 1007270034006, Veelgewaagd, Senekal, 9/6/80; Benjamin Cilliers Botha, 15/3/01, 0103155012000. Volkskas Bpk., Posbus 323, Bloemfontein.

1506/80—FOURIE, Gert Christoffel, 10/10/28, 281010504 2006, Romery Huis 7, Tweespruit, 3/7/80; Eva Catharina Fourie, gebore Kriel, 18/4/35, 3504180017004. Volkskas Bpk., Posbus 323, Bloemfontein.

1487/80—DAFEL, Lowis Jacobus, 16/1/06, 0601165001004, Soeterusouctehuis 6, Kroonstad, 24/6/80; Johanna Wilhelmina Cornelia Dafel, gebore Joubert, 29/5/13, 1305290001 009. Volkskas Bpk., Posbus 323, Bloemfontein.

1486/80—DELPORT, Maria Magdalena Adriana, 5/8/1897, 9708050006005, Fouchesrust, distrik Bothaville, 13/7/80. M. G. R. Rafferty & Kie., Posbus 8, Bothaville.

1539/80—BOTHA, Petrus Daniel, 16/3/15, 1503165027006, Vlakpan, Bultfontein, 23/7/80; Susarah Margaretha Botha, 18/10/26, 2610180054003. Beukes & Beukes, Posbus 15, Bultfontein.

1508/80—GROBLER, Jan Jacobus, 20/11/05, 0511205016 005, Petrus Schoemanstraat 14a, Wilgehof, Bloemfontein, 16/7/80; Zacharia Maria Magdalena Grobler, voorheen Van Wyk, gebore Griesel, 4/6/18, 404102729. Naude & Van de Wall, Posbus 153, Bloemfontein.

1587/80—ERASMUS, Johannes Cornelis Lötter, 16/9/1900, 0009165004004, Bothastraat 7, Steynsrus, 20/7/80; Wilhelmina Sophia Erasmus, 20/4/03, 03042000087. J. H. A. van Zijl, Posbus 1, Steynsrus.

1536/80—GRIESEL, Louisa Petronella Meiring, gebore Scholtz, 11/3/1890, 9003110002008, Groot Zuurfontein, Springfontein, 18/7/80. Schoeman & Smith, Posbus 3, Bethulie.

1580/80—RALL, Cornelis Coenraad, 29/1/1885, 85012950 01001, Lourensstraat, Cornelia, distrik Vrede, 21/6/80; Jacoba Johanna Rall, gebore Van Tonder, 28/4/1885, 8504280003 008. De Waal & Van Rooyen, Posbus 36, Vrede.

2546/80—JANSE VAN RENSBURG, Johannes Frederik, 7/2/1896, 9602075007009, Bothastraat 31, Kestell, 10/7/80; Anna Sophia Janse van Rensburg, gebore Lamprecht, 1/6/02, 0206010007006. Cloete & Neveling, Posbus 69, Harrismith.

1391/80—STEYN, Johanna Catharina, 26/5/03, 030526003 0005, Highlandshof 4, Virginia, 15/6/80. Die Sentrale Eksekuteurskamer Bpk., Posbus 3626, Pretoria.

1476/80—DE VILLIERS, Jan Nicolaas, 15/1/08, 08011550 11001, Pieringkop, Pk. Stabberts, 15/7/80, Brand Wessels & Blignault, Posbus 76, Bethlehem.

1496/80—VAN ROOYEN, Jacobus Petrus, 2/7/24, 240702 503209, Tierhoek, Rouxville, 16/7/80. Gustav van Straten, Posbus 54, Rouxville.

1086/80—BREITENBACH, Petrus Johannes, 13/12/1900, 0012135007008, Andries Pretoriusstraat 27, Bloemfontein, 23/4/80. Malherbe Saayman & Vermaak, Posbus 44, Zastron.

1467/80—OTTO, Aletta Elizabeth, 11/9/05, 050911002 8008, Huis Vergeet-My-Nie, Bultfontein, 20/7/80. Pretorius, De Beer & Rheeder, Posbus 10, Wesselsbron.

1485/80—CILLIERS, Abraham Jacobus, 29/8/04, 04082950 17003, Wesselsstraat 17, Wesselsbron, 10/7/80. Pretorius, De Beer & Rheeder, Posbus 10, Wesselsbron.

KLEYN, Willem Hendrik Kleyn, 26/8/12, 1208265008 001, Dupreezstraat 59, Bloemfontein, 31/7/80; Susanna Adriana Kleyn, 14/9/18, 1809140041008. Siebert & Honey, Posbus 29, Bloemfontein.

OLIVIER, Dirkie Petronella, 17/3/1893, 472458519, Potgieterstraat 3, Wepener, 30/7/80; Cornelius Andries Herculas Olivier. Ochse & Van Rensburg, Posbus 7, Wepener.

1501/80—VAN DER WALT, Hendrik Stephanus, 12/9/06, 0609125001006, Montaguwoonstelle 203, Parkweg, Bloemfontein, 12/7/80. Vermaak & Dennis, Posbus 565, Bloemfontein.

1570/80—GRIESEL, Francois Jacobus Arnoldus, 29/11/24, 2411295054008, Skildwagwoonstelle 8, McHardylaan, Brandwag, Bloemfontein, 21/7/80. Naude & Van de Wall, Posbus 153, Bloemfontein.

1527/80—CILLIERS, Hendrik Jacobus, 16/12/1897, 971216 5005001, Voorslag, Warden, 16/7/80; Petronela Sophia Cilliers. Standardtrust Bpk., Posbus 1248, Bloemfontein.

1569/80—GREYLING, Barend Christiaan Jacobus, 14/5/20, 2005145023005, Fonteinstraat, Bothaville, 22/7/80. Standardtrust Bpk., Posbus 1248, Bloemfontein.

1594/80—SCHONKEN, Bartholomeus Hendrik Nel, 10/6/1894, 9406105001002, Gustavsingel 7, Fichardtpark, Bloemfontein, 23/7/80; Elizabeth Maria Francina Schonken, 1/2/1895. Standardtrust, Posbus 1248, Bloemfontein.

NOORD-KAAP • NORTHERN CAPE

699/80—VAN NIEKERK, Susanna Margaretha, 19/9/1886, 405280237, Ons Huis, Ariadnasingel, Kimberley, 16/7/80. Standardtrust Bpk., Posbus 288, Kimberley.

634/80—MATTHYS, Geoffrey Peter, 3/6/25, 2506035012 008, Cilliersstraat 19, De Aar, 30/6/80. Standardtrust Bpk., Posbus 288, Kimberley.

633/80—LINTVELT, Helena Antonetta Louw, 7/11/1890, 065359197W, Nuwestraat, Pofadder, 18/6/80. Standardtrust Bpk., Posbus 288, Kimberley.

656/80—DU TOIT, Johannes Harms, 18/6/1894, 9406185001 005, Danie Theronstraat, Jan Kempdorp, 7/7/80. Standardtrust Bpk., Posbus 288, Kimberley.

510/80—GOMES, Manuel Inacio Sardinha, 8/4/40, 400408 5022109, 31 Du Plessis Street, De Aar, 16/5/80; Laura Ferreira Gomes, born Cabral. Joseph & Van Rensburg, P.O. Box 139, De Aar.

680/80—SMIT, Izak Schalk, 18/3/16, 1603185002003, Navorsingstasie, Jan Kempdorp, 14/7/80; Christina Susanna Smit, gebore Marais. Olivier & Van Romburgh, Grensstraat, Jan Kempdorp.

542/80—SAAIMAN, Katrina, gebore Visagie, 12/2/18, 103 846173K, Huis 119, 25ste Straat, Kleurlingwoongebied, Prieska, 14/2/79. Van Niekerk & Groenewoud, Posbus 34, Prieska.

685/80—PEARSON, Agatha Maria, gebore Cloete, 12/3/1892, 9203120001004, Langstraat 33, Britstown, 2/7/80, Volkskas Bpk., Posbus 254, Kimberley.

611/80—TRUTER, Andries Edward, 5/2/01, 0102055010007, Carringtonweg 36, Kimberley, 19/6/80; Anna Catharina Truter, 12/6/07. Du Plessis & Serfontein, Posbus 1055, Kimberley.

545/80—COETZER, Johannes Jacobus, 3/8/04, 040803501 3007, Perseel 4 B 4, Tadcaster, 11/5/80. Lubbe Cilliers & Van Tonder, Posbus 12, Hartswater.

386/80—FROST, Benjamin Edward, 16/9/1889, 890916500 2001, Wilhelmina Hospital, Douglas, 26/2/80. Frederick Calvert, 8 De la Mare Street, Farrarmere, Benoni, Tvl.

671/80—BLOCK, Johannes Thompson, 16/10/35, 35101650 99016, Huis 31, Louisvale, 29/4/80; Eva Block, gebore Kooper. P. S. du Plessis, Posbus 154, Upington.

607/80—THERON, Jan, 14/10/08, 0810145001006, Languedoc, Douglas, 23/6/80; Hester Johanna Theron, gebore Du Toit, 25/6/13, 0810145001006. Barclays-Nasionale Bank Bpk., Posbus 4, Kaapstad.

525/80—WRIGHT, Anna Petronella, 20/10/39, 3910200031 000, Elektra Park 30, Beaconsfield, Kimberley, 25/4/80; Henry John Wright. Elliott, Maris, Wilmans & Hay, Posbus 179, Kimberley.

1116/79—PIZER, Hilda, 17/7/24, 2407170007004, Vaneetveldstraat 31, De Aar, 28/10/79. Santamtrust Bpk., Posbus 602, Johannesburg.

690/80—HOLLAND, Robert Nuttall, 6/7/1898, 980706500 4003, 57a Alexander Street, De Aar, 16/7/80; Susara Dorothea Holland. Standardtrust Ltd. P.O. Box 288, Kimberley.

754/80—LIVINGSTON, Kenneth John Arnold, 4/9/05, 050 9045029006, 19 Cemetery Road, Kimberley, 2/7/80. E. M. H. Livingston, 19 Cemetery Road, Kimberley.

710/80—DE BRUYN, Maria Aletta Magdalena Francina, 29/7/07, 07072900130, Kareeboomfontein, distrik Vryburg, 26/7/80. Kotzé & Low, Posbus 123, Vryburg.

714/80—WESSELS, Frans Johannes Christoffel, 21/7/09, 0907215010006, Vantonderstraat 159, Stella, 26/7/80. Frylinck & Walker, Posbus 26, Vryburg.

OOS-KAAP • EASTERN CAPE

1800/80—KLEIN, Joseph Douglas, 26/7/1898, 9807265007 004, 45 Cathcart Street, King William's Town, 6/7/80. Robertson Wiley & King, Posbus 55, King William's Town.

2064/80—COETZEE, Petronella Louise, born Van Heerden, 7/6/1897, 120572799W, widow, 12a Fitzroy Street, Grahamstown, 6/8/80. Espin & Espin, P.O. Box 105, Grahamstown.

1603/80—KRUGER, Anna Hendrika, 14/6/24, 2406140003 002, Hallstraat 44, Molteno, 9/6/80, P. F. Scholtz & Kie., Posbus 23, Molteno.

1047/80—COLYN, Daniel Jacobus, 7/4/1895, 9504075001 000, John Vorsterouetehuis, Queenstown, 2/3/80. De Wet & Kie., Posbus 639, Queenstown.

1920/80—WILLMORE, John Devalance, 14/8/10, 100814 5033009, 38 Tylden Street, Queenstown, 8/7/80; Queenie May Willmore, born Boucher, 29/7/12, 1207290035005. E. D. Chisholm Incorporated, Marvaton Court, 88 Robinson Road, Queenstown.

1938/80—KEETON, Shelsley Parry Paddock, 21/11/09, 091 1215011006, Lombards Post, Southwell, District of Bathurst, 23/7/80. Dold & Stone, P.O. Box 60, Grahamstown.

1990/80—ROOS, Elizabeth Magdalena Margaretha, gebore Klopper, 19/11/04, 0411190016005, Elliot Tehuis vir Bejaardes, Elliot, 13/7/80. Greyvenstein & Spence, Posbus 13, Barkly-Oos.

1988/80—PLAATJES, Beatrice Josephine, 5/12/15, 101289 923K, 25 Perla Road, Korsten, Port Elizabeth, 16/7/80; Richard Charles Plaatjes, 13/9/09, 0909135841012. Fidelity Bank and Trust Co. Ltd, P.O. Box 32, Port Elizabeth.

1310/80—CHARNEY, Dorothy, 22/2/10, 31 Lower Kenwood Avenue, Enfield, Middlesex, England, 4/2/79. Fidelity Bank and Trust Co. Ltd, P.O. Box 32, Port Elizabeth.

2007/80—KLEINHANS, Nicholaas Willem, 4/2/04, 040204 5026000, Ofsowitzrylaan 4, Uitenhage, 26/7/80. Le Roux, Le Roux & Maree, Blenheim Huis, Baardstraat 4, Uitenhage.

MEYER, Lukas Wilhelm, 30/4/01, 0104305005001, Kupdrif, Humansdorp, 17/7/80; Hester Wilhelmina Meyer, Standardtrust Bpk., Posbus 329, Port Elizabeth.

1716/80—CURRIE, Joan, 28/6/1899, 9906280006007, Brookshaw Home, Grahamstown, 7/7/80. Wheeldon, Rushmere & Cole, P.O. Box 88, Grahamstown.

1677/80—KARELSE, Nicklas, 25/1/29, 086597961K, 5 Old Uitenhage Road, Kleinskool, Port Elizabeth, 23/2/80; Margaret Karelse, formerly Frank, born Arends. Pagden, Christian, Hanley & Parkin, Permanent Buildings, 81 Main Street, Port Elizabeth.

1850/80—WYATT, Joyce Anne (Annie), 19/2/27, 270219 0036003, 27 Newington Road, Central, Port Elizabeth, 24/6/80. Pagden, Christian, Hanley & Parkin, Fifth Floor, Permanent Buildings, 81 Main Road, Port Elizabeth.

1746/80—PAUL, Glen Andrew, 8/2/60, 6002085025005, 69 Western Avenue, Vincent, East London, 15/5/80. J. A. Yazbek & Co., Sterling House, Gladstone Street, East London.

2564/79—STRYDOM, Erasmus Johannes, 17/6/57, 570617 5128005, Crossstraat 15, Uitenhage, 3/9/79. Santamtrust Bpk., Posbus 1199, Port Elizabeth.

1796/80—KNIBBS, Cora Kathleen, 10/6/02, 067387491W, Komani Hospital, Queenstown, 24/6/80. Squire Smith & Laurie, P.O. Box 511, King William's Town.

1575/80—BEHRENS, Bertie Henry Hill, 19/8/09, 090819 5014000, 17 McKinnon Street, King William's Town, 8/6/80; Daisy Elsie Botha Behrens, born Owen. Squire Smith & Laurie, P.O. Box 511, King William's Town.

1931/80—ARIKUM, Sinnapan, (Papou Augustine Sinnapan), 3/9/12, 1209035045059, 2 Crammer Street, Malabar, Port Elizabeth, 16/6/80; Elsie Arikum, born George. Lawson Brown & Hutton, P.O. Box 187, Port Elizabeth.

1991/80—WILSON, Trevor Boyd, 1/8/03, 0308015029001, 16 Henley Road, Perridgevale, Port Elizabeth, 24/6/80; Margaret Magdalene Wilson, born Van Eyk. Lawson Brown & Hutton, P.O. Box 187, Port Elizabeth.

1969/80—EVANS, Margaret Ann, born Jones, 30/12/1888, 8812300003001, Mater Dei Private Nursing Home, St Marks Road, East London, 10/7/80. Bradfield & Archer, P.O. Box 43, East London.

1862/80—LABUSCHAGNE, Bernardus, 13/12/03, 031213 5007002, 34 Steuart Street, Molteno, 30/6/80. P. E. Scholtz & Co. P.O. Box 23, Molteno.

1982/80—VAN DER MERWE, Aletta Maria, gebore Grobler, 27/2/1892, 045979111W, Willetstraat 83, Newtonpark, Port Elizabeth, 12/7/80. Volkskas Bpk., Posbus 1493, Port Elizabeth.

1934/80—DRIVER, David, 31/10/19, 1910315002005, Eerste Laan 6, Walmer, Port Elizabeth, 7/7/80. Volkskas Bpk., Posbus 1493, Port Elizabeth.

1712/80—MOOLMAN, Petrus Johannes, 2/5/1895, 950502 5001008, Ons Tuiste, Humansdorp, 15/6/80. C. W. Malan & Kie., Hoofstraat 52, Humansdorp.

8819/80—PRINSLOO, Frieda Johanna Elizabeth, 100820000 6007, Outeniqualaan 124, Doornkloof, Verwoerdburg, 10/7/80. Volkskas Bpk., Posbus 1493, Port Elizabeth.

1877/80—COETZER, Gwendoline Huggett, 8/5/02, 020508 0010007, Bon Accordstraat 4, Adelaide, 25/6/80. Volkskas Bpk., Posbus 1493, Port Elizabeth.

1225/80—WETWOOD, Gertrude Fanny, born Beresford, Port England Hospital, Grahamstown, 6/4/80. Standardtrust Ltd, P.O. Box 329, Port Elizabeth.

751/80—GILLESPIE, Edward William, 26/9/19, 190926505 3000, 84 Dalton Road, Sidwell, Port Elizabeth, 1/2/80. Ardern & Hanekom, P.O. Box 457, Port Elizabeth.

1981/80—MENTZ, Nicolaas Johannes, 23/6/10, 1006235001 001, Boshoffstraat 18, Westering, Port Elizabeth, 20/7/80; Petronella Aletta Mentz, gebore Schoeman, 7/7/15, 150707004 2000. Volkskas Bpk., Posbus 1493, Port Elizabeth.

1616/80—SMITH, Herbert Thornton, 9/4/06, 0604095012 000, 8 Warren Road, Vincent, East London, 7/6/80; Ellen Noreen Smith, 23/8/08, 0808230042000. Ellen Noreen Smith 8 Warren Road, Vincent, East London.

2107/80—EVERTON, Thomas Edward, 15/7/26, 26071550 31008, 15 Hodges Street, Grahamstown, 11/8/80; Ida Elizabeth Matilda Everton, 10/9/27, 2709100023005. Ida Everton, 15 Hodges Street, Grahamstown.

LANSDOWN, Leonard Percival, 17/4/08, 0804175005003, 20 Tait Road, Baysville, East London, 6/8/80. Standardtrust Ltd, P.O. Box 996, East London.

1855/80—BREWSTER, Dorothy Ethel, 25/5/07, 901521777, 29 Settlers Close, Grahamstown, 19/7/80. Wheeldon, Rushmere & Cole, P.O. Box 88, Grahamstown.

1698/80—FERREIRA, Elizabeth Katrina Louisa, gebore Gouws, 5/8/17, 1708050026001, Wrightstraat 29, Sidwell, Port Elizabeth, 27/5/80; Scheepers Ferreira. Delport & Delport, Posbus 3125, Port Elizabeth.

1357/80—FOURIE, Paulus Philippus, 4/11/15, 1511045010 001, Daltonweg 50, Sidwell, Port Elizabeth, 22/5/80. Van der Linde Kemp & Greyvenstein, Posbus 754, Port Elizabeth.

1560/80—DE HAAS, Elizabeth Cleuberry, voorheen Van Vuuren, gebore Knight, 28/9/23, 2309280021000, Willetstraat 50, Newtonpark, Port Elizabeth, 12/6/80. Van der Linde Kemp & Greyvenstein, Posbus 754, Port Elizabeth.

1955/80—SWEETLOVE, Ethel Maud, born James, 5/1/08, 0801050037002, 29 Marina Hills, East London, 13/5/80; William Sweetlove, 23/10/01, 0110235010003. Van der Merwe & Sorour, 513 United Buildings, Maitland Street, Bloemfontein.

NEL, Frederick Jacobus, 31/7/08, 0907315022000, Claremont, Pk. Balfour, 16/7/80. Barclays-Nasionale Bank Bpk., Posbus 1587, Oos-Londen.

1936/80—HAMMOND, Mary Ann, born Maguire, 2/2/05, 9 Lower Drostdy Street, Uitenhage, 13/7/80. Sellick & McIntyre, P.O. Box 94, Uitenhage.

2048/80—PRETORIUS, Jan Ockert Stephanus, 26/4/19, 1904265029001, Waverley Farms, Kirkwood, 12/7/80; Petronella Gertruida Pretorius, gebore Bekker, 11/2/21, 210211 0050004. Volkskas Bpk., Posbus 1493, Port Elizabeth.

2071/80—HAYES, Edmund Charles, 15/11/17, 1711155005 003, 1a Park Lane, Uitenhage, 5/8/80; Susan Hilda Hayes, born Whitehead. Sellick & McIntyre, P.O. Box 94, Uitenhage.

1963/80—BALLINGER, Robert Frederick, 4/4/23, 101241 991W, 8 Gillian Avenue, Glen Hurd, Port Elizabeth, 23/7/80. Syfrets Trust and Executor SA Ltd, P.O. Box 466, Port Elizabeth.

1755/80—DE KLERK, Magdalena (Magrieta) Johanna, 12/11/03, 045982328, Smidstraat 66, Middelburg, 10/6/80. Minnaar & De Kock, Posbus 19, Middelburg.

1975/80—VAN HEERDEN, Sophia Emmerentia, voorheen Van Heerden, gebore Olivier, 15/2/1892, 331356651W, Somersetstraat 82, Graaff-Reinet, 18/6/80. Santambank Bpk., Posbus 26, Graaff-Reinet.

2086/80—WERTH, Alida Elizabeth, formerly Roos, born Marshall, 31/5/12, 1205310045004, 3 Park Gate Mansions, Western Road, Port Elizabeth, 3/8/80. Barclays National Bank Ltd, P.O. Box 164, Port Elizabeth.

1807/80—PRITCHARD, Christina Sinclair, born Robertson, 12/2/15, Passport L756015, 27 Astoria Court, Summerstrand, Port Elizabeth, 14/7/80. Barclays National Bank Ltd, P.O. Box 164, Port Elizabeth.

1951/80—DE LA HARPE, Hubert Charles, 6/1/30, 300 1065026002, 20 Cypress Grove, Graaff-Reinet, 24/7/80. Barclays National Bank Ltd, P.O. Box 164, Port Elizabeth.

1976/80—HEWITT, Charles, 4/11/1898, 9811045011005, Hoofstraat 4, Humansdorp, 17/7/80; Jacomina Hendrina Hewitt, gebore Van der Watt, 6/9/05, 0509060035005. Barclays-Nasionale Bank Bpk., Posbus 164, Port Elizabeth.

1971/80—GOUWS, Johannes Frederick, 11/11/1894, 133939 583W, 22 Dobson Street, Uitenhage, 23/6/80; Winifred Ursula Gouws, born Villiger, 9/4/19, 1331561B7W. Barclays National Bank Ltd, P.O. Box 164, Port Elizabeth.

2023/80—NEL, Johan Frikkie, 13/9/27, 2709135009003, Cookhouse, 24/7/80; Gezina Johanna Nel, gebore Calitz, 18/6/26, 2606180010003. Barclays-Nasionale Bank Bpk., Posbus 164, Port Elizabeth.

2002/80—AUSTIN, Sadie Frances Victoria, born Olvitt, 12/10/15, 1510120020000, 234 Laubscher Park, Main Road, Walmer, Port Elizabeth, 25/7/80; Charles Rainsford Austin, 22/10/10, 1010225017001. Barclays National Bank Ltd, P.O. Box 164, Port Elizabeth.

2046/80—MULLER, John Martin, 16/12/01, 0112165001002, Huis Louisa Myburgh, Kabega Park, Port Elizabeth, 28/7/80; Martha Susanna Muller, born Smith, 2/4/04, 0404020003 004. Barclays National Bank Ltd, P.O. Box 164, Port Elizabeth.

1406/80—BROCKLEBANK, Louis, 10/5/17, 1705105033008, Dohne, 15/5/80; Doris Maureen Brocklebank. Standardtrust Ltd, P.O. Box 996, East London.

2082/80—SCHEEPERS, Leon Daniel, 7/9/33, 330907506 700, Hibiscussingel 66, Uitenhage, 30/7/80; Susanna Anna Scheepers, 31/1/37, 3701310062005. Conradie Pieterse & Kamfer, Posbus 142, Uitenhage.

1952/80—LANDMAN, Reiners Johannes, 5/8/23, 23080550 13002, Elizabethstraat 16, Port Elizabeth, 10/7/80; Mybel May Landman, 324822710W. Santamtrust Bpk., Posbus 1199, Port Elizabeth.

1722/80—CLARKE, Maude (Maud), born Stephenson, 17/4/1895, 9504170002002, 8 Milner Street, Grahamstown, 9/7/80. Standardtrust Ltd, P.O. Box 329, Port Elizabeth.

2031/80—BOSMAN, Violet Floradine, 22/1/28, 28012200 55007, Wistariastraat 4, Linton Grange, Port Elizabeth, 26/7/80; Lionel Bosman, 21/11/23, 2311215007005, Santamtrust Bpk., Posbus 1199, Port Elizabeth.

1758/80—SWANEPOEL, Abraham Stefanus, 7/3/19, 1903 075029003, Beaconhill, p/a Mooiplaas, Oos-Londen, 15/6/80; Ivy May Swanepoel, 17/9/20, 2009170044001, Santamtrust Bpk., Posbus 1199, Port Elizabeth.

1956/80—SWIEGELAAR, Johannes, 1/10/20, 2010015002 006, Cawoodstraat 51, Cradock, 28/6/80; Doreen Muriel Smith Swiegelaar, 16/2/23, 2302160003008, Santamtrust Bpk., Posbus 1199, Port Elizabeth.

2106/80—EMSLIE, Millicent Mary, 4/8/1891, 9108040004 006, 26 Settlers Close, Knight Street, Grahamstown, 11/8/80. Espin & Espin, P.O. Box 105, Grahamstown.

1536/80—MULLER, Johanna Hendrika, born Van Niekerk, 2/6/1895, 9506020006000, widow, Huis Dias, Pastorie Street, Alexandria, 9/4/78. A. P. van Wyk, P.O. Box 18, Alexandria.

1843/80—BLOOMER, Matthew, 30/8/1899, 101215011, 14 Beatty Place, Kensington, Port Elizabeth, 16/7/80; Grace Hilda Bloomer, 3/9/06, 0609030029001, Standardtrust Ltd, P.O. Box 329, Port Elizabeth.

1719/80—ROODT, Elizabeth Johanna, gebore Barker, 17/2/1896, 0583368580W, weduwee, Stasiestraat 31, Indwe, 9/6/80. E. J. Nurse, Posbus 470, Queenstown.

1600/80—COLYN, Nicholaas Francois, 26/3/08, 08032650 10006, Navar, distrik Elliot, 6/6/80. E. J. Nurse, Posbus 470, Queenstown.

1965/80—BROWN, Ruth Miriam, born Pillard, 13/5/01, 0105130019000, St Josephs Hospital, 40 Park Drive, Port Elizabeth, 25/7/80. Pim Whiteley & Close, P.O. Box 829, Cape Town.

Vorm/Form J 187

LIKWIDASIE- EN DISTRIBUSIEREKENINGS IN BESTORWE BOEDELS WAT TER INSAE LÊ

Ingevolge artikel 35 (5) van Wet 66 van 1965, word hierby kennis gegee dat duplikate van die likwidasie- en distribusierekenings (eerste en finale, *tensy anders vermeld*) in die boedels hieronder vermeld, in die kantore van die Meesters en Landdroste soos vermeld en gedurende 'n tydperk van 21 dae (of korter of langer *indien spesiaal vermeld*) vanaf gemelde datums of vanaf datum van publikasie hiervan, as dit later is, ter insae lê van alle persone wat daarby belang het.

Indien binne genoemde tydperk geen besware daarteen by die betrokke Meesters ingedien word nie, gaan die eksekuteurs oor tot die uitbetalings ingevolge gemelde rekenings.

Die inligting word soos volg verstrek: Boedelnommer, familienaam, voornaam(name), persoonsnommer, laaste adres, beskrywing van rekening as dit anders as eerste en finale is; indien oorledene in gemeenskap van goedere getroud was die nagelate eggenoot(note) se name, familienaam en persoonsnommer; tydperk van insae (indien korter of langer as 21 dae), Landdroskantoor.

LIQUIDATION AND DISTRIBUTION ACCOUNTS IN DECEASED ESTATES LYING FOR INSPECTION

In terms of section 35 (5) of Act 66 of 1965, notice is hereby given that copies of the liquidation and distribution accounts (first and final, *unless otherwise stated*) in the estates specified below will be open for the inspection of all persons interested therein for a period of 21 days (or shorter or longer *if specially stated*) from the date specified or from the date of publication hereof, whichever may be the later, and at the offices of the Masters and Magistrate as stated.

Should no objection thereto be lodged with the Masters concerned during the specified period, the executors will proceed to make payments in accordance with the accounts.

The information is given in the following order: Estate number, surname, christian name(s), identity number, last address, description of account other than first and final; if deceased was married in community of property the surviving spouse's names, surname and identity number; period of inspection (if shorter or longer than 21 days), Magistrate's Office.

KAAP • CAPE

By die kantoor van die Meester, KAAPSTAD, en ook van die landdros van die distrik wanneer dit tussen hakies gemeld word.

At the office of the Master, CAPE TOWN, and also of the magistrate of the district when stated in parentheses.

1602/80—LOUBSER, Maria Margaretha, 1605290003008, Middelplaas, Franschhoek; Jacob Mynard (Mynhardt) Loubser, 1405315001008 (Paarl).—Standardtrust, Kaapstad.

5354/78—MITCHELL, Michael James, 5409165164003W, 60 Sixth Road, Walvis Bay.—Liebenberg & Van Rooyen, Walvis Bay.

1853/80—GROENEWALD, Matthys Gerhardus, 1910055032 006, Bayview 13, Culverstraat, Oranjezicht, Kaapstad, Supplementêre Eerste en Finale; Helena Johanna Alberta Groenewald, gebore Kotze, 2804190012008.—Volkskas, Kaapstad.

4188/80—POOL, Hendrik, 9604115001000, Houmoed, Vredendal (Vredendal).—Santamtrust, Kaapstad.

2874/80—MULDER, Daniel, 2107165043002, Hopestraat 16, Tuine, Kaapstad; Mouvene Mavis Mulder, gebore Lynch, 230 5280025009.—Santamtrust, Kaapstad.

1234/80—TIER, Fredrica Elizabeth Marguerita, gebore Bosman, 1408290021009, Moltenoweg 14, Vrijzee, Verbeterde Eerste en Finale (Goodwood).—Santamtrust, Kaapstad.

2588/80—KNOBEL, Clarence Bedford, 0407125014008, 3 Outspan Road, Fish Hoek (Simonstown). — Security Executor and Trust Company, Cape Town.

7742/79—SMALBERGER, Josina Maria, 9406060003001, spinster, Lückhoff House, Alma Road, Rosebank (Wynberg). —Barclays National Bank, Cape Town.

6462/79—PERLOFF, Max, 022858511, Palermo, 10 Yarrow Road, Milnerton, Second and Final.—Barclays National Bank, Cape Town.

3960/80—COATES, John Henry, 0801135033000, 7 Mulvihal Road, Rondebosch (Wynberg).—Barclays National Bank, Cape Town.

4148/80—ROPER, Allan Frederick, 1510265025004, 202 Wingate, Marais Road, Sea Point; Ann Roper, born Rubel, 1512278018008.—Barclays National Bank, Cape Town.

1563/80—GRAY, Charles Stirling, 0803145041007, 103 Fortune, Beach Road, Mouille Point, Cape Town, Supplementary.—Barclays National Bank, Cape Town.

694/80 — WHEELER, Barbara, 0905200026003, widow, Winifield Mansions, Grove Walk, Claremont, Cape Town (Wynberg).—Barclays National Bank, Cape Town.

3531/80—DE VOTI, Myra Stella Daphne, 022131930W, widow, 22 Belamoor, Koeberg Road, Milnerton.—Barclays National Bank, Cape Town.

7434—BEER, George James, 2505105014001, Middelstraat 27, Bellville; Johanna Etresia Beer (Bellville).—Louw & Coetzee, Durbanville.

2254/80—STEENKAMP, Gideon Petrus Johannes, 310621 5039001, Enkelkwartiere, Alexanderbaai (Port Nolloth). — Volkskas, Kaapstad.

3959/80—CLAASSEN, Pe[illegible]us, 1304305010006, Weltevredenstraat 10, Vrykyk, [illegible]oster Dorothea Claassen, gebore Haasbroek, 200101[illegible] (Paarl). — Boland Bank, Paarl.

2923/80—GROENEWALD, Johannes Hendrik, 1408025005 004, Badenhorststraat 15, Riversdal; Anna Johanna Groenewald, voorheen Louw, gebore Diedericks, 1110020022006 (Riversdal).—Boland Bank, Riversdal.

2225/80—VAN SCHALKWYK, Michael Johannes, 150413 5015006, Kerkplaas, Fraserburg; Louisa Johanna van Schalkwyk, 2105300026007 (Fraserburg).—Hansen & Esterhuyse, Fraserburg.

679/79—MEINTJES, Johannes, 3508095053004, oujongkêrel, Victoriasstraat, Willowmore, Gewysigde Eerste en Finale (Willowmore).—De Jager & Vennote, Willowmore.

539/80 — SWART, Johanna Catharina Adriana, gebore Schutte, 1003050006009, Markstraat, Willowmore, Tweede en Finale Likwidasie en Distribusie (Willowmore).—Standardtrust, Port Elizabeth.

7043/79—EUVRARD, Rachel Victor, voorheen Barry, gebore Van Zyl, Stiklandhospitaal, Bellville (Bellville).—Boland Bank, Montagu.

4720/80—NAUSCHÜTZ, Carel Willem Johannes, 05120350 29002, Huis Jan Lange, Riversdal (Riversdal).—Santamtrust, Bellville.

4397/80—BLOM, Elizabeth Susanna, gebore Van Wyk, 320 820005003, Wilberforcestraat 19, Strand (Strand).—Santamtrust, Bellville.

LAUBSCHER, George Gerhardt, 3909135020005, Keyterstraat 96, Oudtshoorn; Gertruida Johanna Phillipina Laubscher, gebore Steenkamp, 4207280044006 (Oudtshoorn).—Santamtrust, Kaapstad.

4469/80—DYZEL, Louis Jacobus, 0903295011006, Montagustraat 41, Blanco (George).—Santamtrust, Bellville.

LAUBSCHER, George Gerhardt, 3909135020005, Vanriebeeckstraat 34, Bethal; Gertruida Johanna Phillipina Laubscher, gebore Steenkamp, 4207280044006 (Bethal). — Santamtrust, Kaapstad.

4037/79—LE ROUX, Ignatius Jacobus, 1512135021007, Springbok Motors, Voortrekkerweg, Parow, Eerste Likwidasie en Distribusie (Bellville).—Santamtrust, Bellville.

4305/80 — TULLEKEN, Victor Emmanuel, 014527735W, Wateringstraat 29, Parow; Hester Elizabeth Joubert Tulleken (Bellville).—Santamtrust, Bellville.

4284/80—VAN ZYL, Francois, 0310095015007, Mimosalaan, Wesbank, Oudtshoorn (Oudtshoorn).—Santamtrust, Bellville.

1954/80—JENNINGS, Jessie Beryl, 022826815, Harewood Nursing Home (Wynberg).—Standardtrust, Cape Town.

781/80—BUTLAND, Thomas James, 1404235006007, Beach Road, Betty's Bay (Hermanus).—Standardtrust, Cape Town.

3585/80 — VAN WAGENINGEN, Gerhard, 0310185017 004, Ons Tuiste, Dreyerstraat, Bellville; Magdalena van Wageningen (Bellville).—Standardtrust, Kaapstad.

2879/80—PURDUE, Olive Grace, formerly Glenister, born Stegmann, 9508300007005, 42 Albertyn Street, Hermanus (Hermanus).—Standardtrust, Cape Town.

1965/80—PETERS, Colin Ingersoll, 1201205047007, 17 White Road, Plumstead, Cape Town (Wynberg).—Standardtrust, Cape Town.

6896/79—McCONNELL, James Peter Stroyan, 1009145013 009, 50 Mimosa Court, 277 Beach Road, Sea Point, Cape Town, Supplementary First and Final.—Standardtrust, Cape Town.

649/80—COETZEE, Gwynneth Marian (Marion) Jean, 12 Surf Edge Flats, Banks Road, Fish Hoek (Simonstown).—Standardtrust, Cape Town.

3216/80—PREUSS, Gerda Herta Alice, born Sachs, 160 3180005001, Stikland Hospital, Stikland, (Bellville).—Standardtrust, Cape Town.

3446/80—PAYNE, Cyril Jean, 2112285011004, Debeersweg 113, Strand (Strand).—Murray & Du Toit, Strand.

3612/80/2B—VAN RENSBURG, Christoffel, 231214505 3002, Wentzelstraat 12, George; Johanna Catharina van Rensburg, gebore Visagie, 2810160058004 (George).—Boland Bank, George.

2728/80—VAN JAARSVELD, Paul Willem Jacobus, 0807 265019008, Botrivierweg 25, Kleinmond; Elizabeth Catharina van Jaarsveld, gebore Du Plessis (Caledon).—Boland Bank, Caledon.

1135/80—DU TOIT, Andries Petrus, 2006135011000, N R F Kamp, Oudtshoorn; Doulina du Toit, gebore Schoeman, 260 9240057006 (Oudtshoorn).—Duvenage Keyser & Jonck, Oudtshoorn.

3619/79—DEKKER, Josef Johannes Nicolaas, 0309235021 008, Killarneystraat 8, Bellville (Bellville).—Herold Gie & Broadhead, Kaapstad.

3174/80 — LOTZ, Alice Maud, 950608006007, 15 Smuts Avenue, Hermanus; Andrew (Andries) Willier (Villiers) Charles (Carel) Lotz, 0209155004002 (Hermanus).—Herold Gie & Broadhead, Cape Town.

6305/78—VAN DE HEUVEL, Peter Kenneth, 291001505 1012K, 233 Elsie's River, Halt Road, Elsie's River; Mildred Janet van de Heuvel, born Daniels, 2712090036011K (Goodwood).—C. K. Friedlander Kleinman & Shandling & Retief Jackson & Neethling, Cape Town.

6729/79—LAMBERT, Leon, 6010135018003, Greystraat 105, Strand (Strand).—Rowan & Pullen, Strand.

2236/80—ALBERTUS, Christian, 007255019, 313 Ninth Avenue, Kraaifontein; Francina Albertus, born Cornelius (Bellville).—Claude W. Ipser, Bellville.

2977/80—STEMMET, Christina, Derde Laan 77, Belgravia Landgoed, Athlone (Wynberg).—D. P. de Klerk & Van Gend, Kaapstad.

7481/79—LOUBSER, Jacobus Petrus van der Merwe, 030 9085025000, Sorgvliet, Calvinia; Christina Wilhelmina Loubser, gebore Van Zyl, 0411050022002 (Calvinia).—Nel & Laurence, Calvinia.

1445/80—HAMMAN, Eduard Christiaan, 149375509W, Blakesgastehuis, Kusweg, Strand; Maria Anna Wesselina Hamman, gebore Frick, 117915782W (Strand).—Boland Bank, Strand.

5854/79—VAN DER WESTHUIZEN, Anna Jacoba Elizabeth Margaretha, gebore Hanekom, 103829958W, Huis Alida, Barnardstraat 2, Bellville (Bellville).—Van Niekerk & Groenewoud, Prieska.

3765/60—HICKMAN, Carel Nicolaas Eduard, Viervlei, Sauer, Gewysigde (Piketberg).—Bill Tolken Bresler & Brynard, Bellville.

1454/79—LOWE, Jesse Arthur, 1911305050103, divorced, 86 Kitchener Street, Parow, First and Final and Redistribution (Bellville).—Barclays National Bank, Cape Town.

2147/80—BROWN, Jessie Emma, 8908060003007, Carlisle Lodge, Kommetjie Road, Fish Hoek (Simonstown).—Buchanan Boyes, Cape Town.

2727/80/1C—JONES, Tom, 9706035003006, 63 10th Avenue, Boston Estate, Bellville (Bellville).—D. J. Smit & Siebrits, Bellville.

7491/79—WELLER, Malcolm Gordon Barrie, 4402035086 101, 31 Malcolm Road, Rondebosch (Wynberg).—Syfrets Trust, Cape Town.

1977/80—THOMAS, Ellen Sarah (Sara), born Heibner, 022 329642, York Street, Woodstock.—Syfrets Trust, Cape Town.

2696/78—SOLOMON, Daisy Dorothea, 115274394W, 27 Malcolm Road, Rondebosch, Amended First and Final (Wynberg).—Syfrets Trust, Cape Town.

2700/80—VAN DER POST, Cornelis, 1501155041003, Ludlowweg 36, Vredehoek, Kaapstad, Eerste.—Syfrets Trust, Kaapstad.

186/80—FOURIE, Johanna Christina, gebore Verster, 191 0240001007, Chasmarhof 12, Kusweg, Strand, Eerste (Strand).—Syfrets Trust, Kaapstad.

970/80—EBERSOHN, Petrus Johannes Jacobus, 1305305001 002, Gainsboroughstraat 28, De la Haye, Bellville (Bellville).—Syfrets Trust, Kaapstad.

509/80—TRUTER, Johannes Leonardus, 5803095042000, Kelseystraat 9, Denneburg, Paarl (Paarl).—Syfrets Trust, Kaapstad.

924/80—PELLISIER, Christina Johanna, gebore De Boer, 4306210042005, Pelikaanstraat 1, Onder-Papegaaiberg, Stellenbosch; George Murray Pellissier (Stelenbosch).—Syfrets Trust, Kaapstad.

5337/79—RINQUEST, Sarah Florina, gebore Appollis, 096 758504K, Orleansstraat 2, New Orleans, Huguenot (Paarl).—Syfrets Trust, Kaapstad.

1335/80—NYEBOER, Mannes, 3302245056103, Plettenbergstraat 27, Monte Vista (Goodwood).—Syfrets Trust, Kaapstad.

6604/79—LOUW, Maria Elizabeth, gebore Van Niekerk, 9001170004005, Huis Aristea, 61 Koninginstraat, Durbanville (Bellville).—Syfrets Trust, Kaapstad.

5983/79—BUTLER, William Stephen, 5801265057, Barnardstraat 46, Gansbaai (Hermanus).—Syfrets Trust, Kaapstad.

4086/80—STEENHUIS, Annetta Meta, gebore Busmann, Louis Leopoldstraat 13, Goodwood-Wes; Roelof Steenhuis, 0505305017004 (Goodwood).—Syfrets Trust, Kaapstad.

6286/79—DAVIDS, John, 3401096065014, Jonros, First Avenue, Lotus River; Rose Magdalena Davids, born Dreyer (Wynberg).—Bisset, Boehmke & McBlain, Cape Town.

3541/80—LEHY, Agnes, Jane, 1108280036005, 18 Baris Road, Woodstock; Richard Francis Lehy.—Buchanan Boyes, Cape Town.

2098/80—DAY, John William, 022729693W, 44 Berkeley Square, Rondebosch, First (Wynberg).—Syfrets Trust, Cape Town.

2885/80—WELLS, Ruby Leila, born Day, 7 Forest Drive, Pinelands (Goodwood).—Syfrets Trust, Cape Town.

367/79—ROBINSON, Matthew, 022521065W, 21 Dedgemoore Road, Camp's Bay.—Syfrets Trust, Cape Town.

1670/80—GREEN, Abraham Harry, 0807075034007, 16 Heathfield Road, Sea Point.—Syfrets Trust, Cape Town.

6920/79—AHRENDS, Wilhelmina Sophia (Sofia), 160423 0044016, 3 Somer Street, Greenhaven, Athlone (Wynberg).—Syfrets Trust, Cape Town.

2392/80—OSLER, Stanley Gordon, 0701315003007, 3 Willow Road, Somerset West (Somerset West).—Syfrets Trust, Cape Town.

2934/80—FIELDING, Marjorie Winifred, born Dyer, 100 4200050004, Bayview Residence, Gill Road, Muizenberg (Simonstown).—Syfrets Trust, Cape Town.

7264/79—DICK, Magdalene Mavis, 1012190006001, 5 Orange Street, Paarl (Paarl).—Syfrets Trust, Cape Town.

1448/80—MOUTON, John Edward Daniel, 2908315041006, 27 Myrtle Road, Tokai (Wynberg).—Syfrets Trust, Cape Town.

2761/80—GARGIULO, George, 0403185010101, 26 Lincluden Road, Rugby.—Syfrets Trust, Cape Town.

3617/80—VINCENT, Mabel Ada, born Downing, 022766 490W, 3 Protea Road, Thornton (Goodwood).—Syfrets Trust, Cape Town.

3323/80—HINGLE, Phyllis Myrtle, born Webb, 504 Beach Court, London Road, Sea Point.—Syfrets Trust, Cape Town.

2341/80—HIRST, Annie, born Rudd, 096713066W, Robali, New Street, Somerset West (Somerset West).—Syfrets Trust, Cape Town.

127/80—BRINK, Stanley, 0402285005003, 1 Donver Flats, 206 High Level Road, Sea Point; Roline Johanna Brink, born Uys.—Syfrets Trust, Cape Town.

374/80—DEHNING, Ernst (Ernest) Otto, 9901225010008, 10 Clare Park Avenue, Rondebosch; Augusta Johanna Wilhelmina Dehning, born Payne (Wynberg).—Syfrets Trust, Cape Town.

2627/80—FILBY, Sydney William, 1912135027006, Rosedene, Eureka Road, Rondebosch (Wynberg).—Syfrets Trust, Cape Town.

281/80—DEWHIRST, Ben, 9308025007004, Earl Dawn, Daw Avenue, Southern Cross Estate, Constantia (Wynberg).—The Board of Executors, Cape Town.

484/80—BURGESS, Nora Delphine, born Wright, 101200 577W, 161 Milford Road, Plumstead; John Burges, 101200 576 (Wynberg).—The Board of Executors, Cape Town.

3342/80—VIETRI, Coral Mary, born Champion, 451022 0051001, 204 Cumberland, Beach Road, Three Anchor Bay.—The Board of Executors, Cape Town.

1997/80—LAWRENCE, Constance Caroline, formerly McDonnell, born Gain, 8402020002002, 1 Lasca Flats, Dalton Road, Fish Hoek (Simonstown).—The Board of Executors, Cape Town.

3514/80—OSBORNE, Grace Newman, born Green, 010219 0011001, 11 Cumbury Court, Cumnor Avenue, Kenilworth, First (Wynberg).—Syfrets Trust, Cape Town.

5408/79—GRAHAM-WOLFAARD, Henry Jacobus, 971203 5002006, 19 Glen Avon Flats, Kloof Nek Road, Cape Town, First.—Syfrets Trust, Cape Town.

2397/80—TREDGOLD, Violet Iris, born Wylde, 960223000 4008, Rosedale Nursing Home, Kenilworth, First (Wynberg).—Syfrets Trust, Cape Town.

1439/80—BROWN, Winifred Adela Rankine, 022446371, 22 Whitehall Court, Main Road, Rondebosch, First (Wynberg).—Syfrets Trust, Cape Town.

1237/80—WHEELER, William Henry, 022130870W, Teddington, 8 Weltevreden Avenue, Rondebosch, First (Wynberg).—Syfrets Trust, Cape Town.

6636/79—VAN EWIJCK VAN DE BILT (Van Ewyck van de Bilt), Sippo Johan, 0211265006109, De Ehze, Almen, Gelderland, Holland, First (Wynberg).—Syfrets Trust, Cape Town.

2232/80—WHITEHEAD, Edwin Preston, 9605075001005, Victoria Cottage, Waterval Farm, Franschhoek, First (Paarl).—Syfrets Trust, Cape Town.

2091/80—WATKINSON, Dora Gould, born Hornabrook, 9108190005001, Sunnyside Home, Morpeth Road, Plumstead, First (Wynberg).—Syfrets Trust, Cape Town.

2573/80—McMURRAY, Joan Hammond Thomson, born Thomas, 622 Montebello, Montrose Street, Newlands, First (Wynberg).—Syfrets Trust, Cape Town.

4838/79—SEGER, Francios Daniel Thomas, 014466735V, Robertsonweg 24, Parow (Bellville).—Pieters, Truter & Hurter, Kaapstad.

3954/80—BAARTMAN, Benjamin, 0911165030014, Bergsig 190, Calitzdorp; Sofia Johanna Baartman, voorheen Janse, gebore Du Plessis (Calitzdorp).—Barry & Mouton, Calitzdorp.

4976/79—COLLINS, William David, 118942430, widower, Elsie's River (Goodwood).—Scher Webner & Co., Goodwood.

1359/80—GROENEWALD, Karel Christiaan, 4604075067 004, Middelpos, afdeling Calvinia; Johanna Magdalena Groenewald, gebore Lourens (Calvinia).—Guthrie & Theron, Caledon.

2139/80—MULLER, Agatha Mary, 8907300005004, 38 Edinburgh, Arthurs Road, Sea Point, Cape Town.—Pim Whiteley & Close, Cape Town.

2450/80—MOORE, James Ellis Clark, 1004025030009, 403 Rapallo, Beach Road, Sea Point.—Syfret Godlonton Fuller Moore, Cape Town.

6759/79/6C—DAVIS, Jack Cecil, 1309015047008, 2 Gilglen, Glengariff Road, Three Anchor Bay.—Roup Wacks & Kaminer, Cape Town.

403/80—LIBERTY, Aubrey Ingle, 2312315041019, 31 Third Avenue, Fairways, Wynberg; Emily Hyland Liberty, born Newkirk, 2313080045013 (Wynberg).—Y. Ebrahim & Co., Athlone.

2302/80—SILBOWITZ, Sylvia, 022712449, 4 Gloucester Square, Main Road, Kenilworth (Wynberg).—Sonnenberg Hofmann & Galombik, Cape Town.

6588/79—HARTLEY, Frank Cawood, 2510145059008, 34 Garfield Road, Claremont (Wynberg).—G. R. Sankey, Hout Bay.

771/78—RAWKINS, Richard Ralph Rowland, 1608145045 000W, 48 Edison Drive, Meadowridge (Retreat).—Buirski, Herbstein & Ipp Inc., Cape Town.

1326/80—GALLANT, Cornelius Walter, 2110135047012, 28 Valley Road, Blackheath; Eileen Dotothy Gallant, born Christians (Bellville).—W. A. Groenewald & Company, Athlone.

6034/79—AUSTIN, Harry, 022138818, 27a Fourth Avenue, Sherwood Park, Mannenberg; Ethel Christina Austin (Retreat).—Abercrombie & Sonn, Salt River.

964/80—SALTER, John Fisher, 1606025045009, Robeye View, Lilsol Road, Sea Point, Cape Town.—Thompson, Smithers & Bradley, Wynberg.

1031/79—MEISENHEIMER (Ebrahim Edward Manus Meisenheimer), Edward Manus James, Cape Town (Wynberg).—Isaacson & Lehr, Claremont.

1459/80—HOLESH, Bertha (Betty), born Cohen, London.—K. Sandler Frank & Co., Cape Town.

2059/80—BRANDER, Charles Alfred, 210222504101, 22 Second Avenue, Crawford; Wilhelmina Helena, born Gaffley, 3302010052014 (Wynberg, Retreat).—Ben van der Ross, Paarl.

6192/79—FRICKER, Susanna Magdalena, 910503000500, 18 Zorgvliet Flats, Steenbras Street, Ysterplaat, Maitland.—Pincus, Matz & Feinberg, Wynberg.

6851/79—CORNOFSKY, Mark, 022322024, widower, 10 Avenues des Huguenots, Fresnaye, Amended.—Schneider Galloon Reef & Co., Cape Town.

1498/80—PETERSEN, Mark Alexander, 6204075145013, 10 Koggelberg Road, Bishop Lavis (Bellville).—Buirski, Herbstein & Ipp Inc., Cape Town.

7292/79—SEMER, Freda, 0305150020009, 14 Bonne Esperance, Main Street, Paarl (Paarl).—S. A. Semer & L. Bransky, Paarl.

479/80—VILJOEN, Fred John, 4707255096006, 311 Daleway, Shanklin Crescent, Camps Bay.—c/o Swanepoel Uys & Rushton, Cape Town.

1702/80—DELATIZKY, Jacob (Jack), 0811105028005, 201 Deauville Flats, Worcester Road, Sea Point.—Mallinick Rees Richman & Closenberg, Cape Town.

3857/79—ROOS, Henry (Johannes) Stephanus, 1608235007 001, 40 St Kilda Road, Crawford (Wynberg).—Mrs Thelma Roos, Crawford.

1456/80—TOERIEN, Francois Malan, 0402205004003, Proteastraat 3, Wolseley; Jenet Gesina Maria Toerien, gebore Mynhardt, 0607150001008 (Wolseley).—Boland Bank, Port Elizabeth.

2313/80—CROUS, Hendrik Hermanus, 1311075013003, Scholtzstraat 15, Swellendam (Swellendam).—Boland Bank, Swellendam.

2496/80—VAN DER MERWE, Andries Petrus Rudolph, 1202195005005, Welvanpasweg 22, Wellington, Supplementêre Eerste en Finale (Wellington).—Volkskas, Kaapstad.

2906/80—PIENAAR, Charles Johannes, 2203075026003, Hendrik Berghstraat 2, Stellenbosch; Marjory Maud Pienaar, gebore Cary (Stellenbosch).—Boland Bank, Stellenbosch.

7499/79—FELDTMANN, Johan Christian, 3604205115003, 27 Mark Street, Knysna (Knysna).—Strydoms, Knysna.

6106/79—CALITZ, Alfreda Levona, born De Jager, 2204 280004009, 4 Hill Street, Knysna, Second (Knysna).—Standardtrust, Port Elizabeth.

4170/80—UYS, Susanna Hermina, gebore Kunz, 050141 545W, Esparanza-ouetehuis, Strand (Strand).—Volkskas, Kaapstad.

340/79/4D—FLOORS, Ralph Adolph Floor, 075462738K, Wollie Bronkhorststraat 49, Laingsburg (Worcester).—David Schur, Worcester.

1106/80/6B—SMIT, Dirk Albertus, 2901165006005, Pampoenkraal, Aurora; Catharina Margaretha Smit, gebore Smit, 3606300091007 (Laaiplek).—Boland Bank, Porterville.

2923/79—BEYERS, Johan David, 9210235001001, Huis Brevis, Tulbaghstraat, Worcester (Worcester).—J. J. Beyers, Worcester.

3250/80—DE VILLIERS, Judith Johanna, gebore Marais, 149353387W, Nuwerustehuis, Russellstraat, Worcester (Worcester).—Theron, Humphrey & Fick, Worcester.

499/80—McGUFFOG, Dorothea Mary, 1508010047000, Mount Pleasant, Gatesville Road, Kalk Bay (Simonstown).—Herold Gie & Broadhead, Cape Town.

6877/79—SMITH, Margaret Louise, 968030103, Gwelo, Zimbabwe, Supplementary First and Final.—Standardtrust, Cape Town.

7401/79—LOCKIE, George William Ashington, 3210135015 008, 96 Rotherfield Road, Plumstead; Theresa Elaine Lockie, 3702240044006 (Wynberg).—Standardtrust, Cape Town.

6744/79—MALHERBE, Philippus Bernardus, 0108085002 005, Demperstraat, Onrus; Catharina Magdalena Malherbe, gebore Malherbe, 0811040013005 (Hermanus).—Barclays-Nasionale Bank, Kaapstad.

6460/78—LOOTS, Nicolaas 3304055062007, Piet Grobelaarstraat 26, Ysterplaat, Gewysigde Eerste en Finale Likwidasie en Distribusie; Yvonne Loots, 11889725W.—Herman Smit & Kruger, Durbanville.

7198/79—THERON, Yda Johanna, 045979863W, Soeterusouetehuis, Olivierstraat, Strand (Strand).—Boland Bank, Strand.

7445/79/5B—LOURENS, Carel Johannes Francois, 12113 05037006, Platbosstraat 7, Stilbaai, Gewysigde; Stephanus Rudolf (Rudolph) Lourens, gebore Strydom, 1709070019000 (Riversdal).—Boland Bank, Stilbaai.

7487/79—VAN NIEKERK, Johannes Vlok, 0212135017003, 504 Culmwood Gardens, Plumstead, Cape Town (Wynberg).—Herold, Gie & Broadhead, Cape Town.

1632/80—JEFTHA, Cornelius, 149362013K, Munnikstraat 40, Worcester; Wilhelmina Augusta Magdalena Jeftha, 14936 2104K (Worcester).—J. E. Krige & Seuns, Worcester.

134/80—HALL, Cyril Godfrey, 8607135001000, 17 Constitution Street, Robertson (Robertson).—Boland Bank, Robertson.

5631/79—GRILL, Nathan Hymie, 24 Fleetwood Road, Salisbury, Alexandria Park.—Fairheads Trust, Cape Town.

1871/80—RODGERS, Andries Hendrik, 2401075051019, Langebaan; Maria Louisa Rodgers, gebore Blaauw, 27101500 59014 (Hopefield).—Boland Bank, Hopefield.

2353/80—DU PLESSIS, Isaac Theodoore, 17de Laan, Windermere.—Heyns, Strauss & Visagie, Goodwood.

TRANSVAAL

By die kantoor van die Meester, PRETORIA, en ook van die landdros van die distrik wanneer dit tussen hakies gemeld word.

At the office of the Master, PRETORIA, and also of the magistrate of the district when stated in parentheses.

14677/79—BRAND, Edward James, 4301225063005, Wakefieldlaan 1, Ellaton, Klerksdorp; Johanna Catherina Joachemina Brand, 4804100074005 (Klerksdorp).—Ben de Wet & Kie., Klerksdorp.

10527/79—WULFF, Sophie Maria, 300815003002, 4 Carleton Jones Drive, Carletonville (Oberholzer).—I. F. Waks & Waks, Carletonville.

517/80—GUTSCHE, Adolf Dagobert Emil, 0410275008002, Geduld, Pk. Hartbeesfontein; Anna Catharina Gutsche, gebore Blignaut, 0706280002009 (Klerksdorp).—C. P. Vermaas & Cronje, Hartbeesfontein.

13200/79—MEIRING, Gabriël Antonie, 1602155019005, Perseel G27, Rooibokkop, Marble Hall (Groblersdal).—Herman Grobler, Dixon & Botes, Groblersdal.

10893/79—HEPWORTH, Bernard Gilpin, 958010864, St Margaret's, Irene Homes, Irene. — Tennant & Company, Cape Town.

5003/80—GENIS, Johanna Wilhelmina Christina, gebore Smit, 0506200028005, Byzonderheid, Roedtan; Evert Jan Genis, 0001235011002 (Potgietersrus).—Borman, Snyman & Barnard, Potgietersrus.

1118/80—VAN DER MERWE, Erasmus Albertus, 950302 5009006, Louis Trichardtstraat 37, Louis Trichardt; Helena Catharina van der Merwe, gebore Campbell, 0212060010007 (Louis Trichardt).—Borman, Snyman & Barnard, Potgietersrus.

962/78—LOURENS, Charlotte Elizabeth, gebore Reynecke, 3305090012006, C Straat 6, Eenheid E, Middelburg; Johannes Nicolaas Lourens, 2608255026005 (Middelburg).—S. E. Steyn & Esterhuysen, Middelburg.

1134/80—PIETERSE, Frederike Elizabeth, gebore Jonker, 4511240076002, Doornkraal, Plot 95, Cullinan (Bronkhorstspruit).—Boland Bank, Pretoria.

9662/78—BEZUIDENHOUT, Wynand Johannes Cornelius, 1903045031006, Amandalaan 35, Witbank; Anna Catharina Bezuidenhout, voorheen Bezuidenhout, gebore Van Zyl, 3312110036007 (Witbank).—Harvey, Mostert, Jonker & Tee, Witbank.

12306/79—SIEBERS, Heinrich Anton Theodore, Jackaroo Hoewes, Witbank (Witbank).—Harvey, Mostert, Jonker & Tee, Witbank.

6038/77 — KRUGER, Louis Hosea, 316955069, Krugersdorp (Krugersdorp).—W. J. S. Bekker, Pretoria.

14102/79—DOUGAL, Margaret Wilson, 211444720W, meerderiarige jongedogter, Rooikruisouetehuis, Springs, Supplementêre (Delmas).—Pickard Kirstein & Maree, Delmas.

11262/79—LINDEQUE, Marthinus Stephanus, 840481450 01001, Krokodildrift-wes, distrik Brits (Brits).—E. D. Ras & Kie., Brits.

14774/79—BENTHAM, Kenneth, 1804125045108, Flat D1, Anna Botha Duplex Flats, Phalaborwa (Phalaborwa).—N. C. Maritz, Tzaneen.

8366/75—HARDING, George Edwin, 0911295017006, Plot 65, Zonnestraal, District of Nigel; Elizabeth Eliza Harding, formerly Colley, born Birkhill (Nigel).—Mitchell & Brits, Nigel.

14774/79—BENTHAM, Kenneth, 1804125045108, Flat D1 Anna Botha Duplex Flats, Phalaborwa (Phalaborwa).—N. C. Maritz, Tzaneen.

3918/79—BAKER, Mary Ivy Beatrice, 1205300031006, Krugersdorp; Arthur Horace Baker, 1302275008000.—Levitt & Dowdle, Margate.

13484/79/4C—DE VILLIERS, Horace Holmes, 021210500 1003, San Martino 407, Troyesstraat, Pretoria, Likwidasie en Verdeling.—C. W. Malan & Kie., Humansdorp.

640/80—DEMETRIADES, Harry, 0711095023000, unmarried, Windsor Court 106, Jeppe Street, Johannesburg.—Symington & De Kok, Bloemfontein.

12202/79—DEGENAAR, Daniel Cornelis, 0912185012008, Leeuspruit, Standerton; Barbara Magdalena Degenaar (Standerton).—I. Fisher V. d. Berg & Nel, Standerton.

156/80—SALTER, Valerie Thelma, 2901210038003, 99 Van Wouw Street, Groenkloof, Pretoria.—Pim Whiteley & Close, Pretoria.

6353/80—BRINK, Susanna Josina, 344761692, plaas Klipdrif, Hammanskraal.—MacIntosh Cross & Farquharson, Pretoria.

595/80—KRUGER, Wilhelmina, 5603070079005, Laerskool Koshuis, Witrivier; Carel Hendrik Kruger, 5404165046003 (Witrivier).—Botha & Van Rensburg, Witrivier.

14721/79—McLAREN, Isabella, 9501310010002, Rosehaven, Willow Road, Hurlingham Gardens, Sandton (Randburg).—Berger & Berger, Johannesburg.

5084/79—PIETERSE, Nicolaas Barend, 3812035020002, 37 Gerrit Maritz Drive, Monument, Krugersdorp (Krugersdorp).—R. A. Joseph, Krugersdorp.

14197/79—DOWNARD, Hilary Merle, formerly Streit, born Rautenbach, 3503280025008, 1 Barry Avenue, Wilkoppies, Klerksdorp (Klerksdorp).—Van Staden & Engela, Stilfontein.

10638/79 — HALL, Cathrina Cornelia, 2709300051004, Parkstraat 93, Randfontein; Edward Deoflis Hall, 24081350 49008 (Randfontein).—Con Kilian, Krugersdorp.

1654/80—BAKER, Constance, 357530252C, Diamondstraat 284, Toekomsrus (Randfontein).—Con Kilian, Krugersdorp.

3792/79—TALJAARD, Jochem Johannes, 2602175009001, Lot 47, Loumarina, Randfontein; Lukas Gerhardus Taljaard (Randfontein).—Con Kilian, Krugersdorp.

8240/79—SCHNEIDER, Susara Elizabeth, 9805080007001, Wishardtstraat 25, Krugersdorp-Noord, Aanvullende (Krugersdorp).—Volkskas, Klerksdorp.

730/80—LOEST, Fritz Coenraad, 1103125038001, Streakstraat 5, Nelspruit (Nelspruit).—Volkskas, Klerksdorp.

13159/79—VAN DER WALT, Nicolaas Tjaart, 95031950 01007, Louis Mansions 304, Troyestraat, Pretoria.—Volkskas, Klerksdorp.

3683/77—JAMES, John Brian, 324881459, Blantyre, Malawi.—Schumann Van den Heever & Slabbert, Kempton Park.

14815/79—CLOETE, Hester Wilhelmina Johanna, 170507 0041002, Hompesstraat 44, Luipaardsvlei, Krugersdorp (Krugersdorp).—Die Sentrale Eksekuteurskamer, Pretoria.

13109/79—ARNDT, Daniël Beniamin, 3311255023002, 12 Dromedarisstraat, Quellarie Park, Krugersdorp; Anna Johanna Catharina Arndt, 335676986 (Krugersdorp).—Die SEK, Pretoria.

5231/80—COETZEE, Frederik Jacobus, 0706215019003, Valley View, Cygnetstraat, Florida Meer (Roodepoort).—Standardtrust, Johannesburg.

7236/73—DUVENAGE, Jan Hendrik, 370920535, Bloekomstraat 3, Riversdale, distrik Vereeniging, Gewysigde; Anna Susanna Sophia Duvenage, gebore Taylor (Vereeniging).—De Klerk, Vermaak & Vennote Ing., Vereeniging.

13797/79—SEITZ, Dora Marie Emma, 0509280028105, Rionwoonstelle 8, Vereeniging (Brits).—Jonker Van Onselen & Van der Walt, Brits.

5484/78—DE BEER, Johan Matthys Adam, 2610025012000, Plot 72, Rondebosch, Louis Trichardt (Louis Trichardt).—Coxwell & Steyn, Louis Trichardt.

4552/80—LABUSCHAGNE, Pieter Willem Adriaan, 160211 5012009, Blackreefweg 17, Dinwiddie, Germiston (Germiston).—E. D. Ras & Kie., Brits.

4586/80—COETSEE, Catharina Rebecca, 354486338W, Hermon Tehuis vir Bejaardes, hoek van Generaal Dewet- en Beyerstraat, Pretoria-Noord.—Rorich, Wolmarans & Luderitz Ingelyf, Pretoria.

6397—VAN ZYL, Hendrik Petrus, 2210215031009, C. M. van der Heeverstraat 7, Vanderbijlpark; Eliza Wilhelmina van Zyl, 220520002900 (Vanderbijlpark).—Santamtrust, Port Elizabeth.

6307/80—LABUSCHAGNE, John Benjamin, 2308195005 009, Haynsstraat 30, Witpoortjie; Janetta Wilhelmina Elizabeth Labuschagne, 3007180015002 (Roodepoort).—Santamtrust, Port Elizabeth.

8063/80—VAN VUUREN, Magdalena Hendrina Sophia, 305/521/6W, Reaperstraat 20, Farrarmere, Benoni (Benoni).—Santamtrust, Port Elizabeth.

5634/80—SMITH, Susanna Gertruida Catharina, 2111180 006002, Instituutstraat, Pirowvillespoorweg, Germiston; Willem Cornelis Smith, 2307145005002 (Germiston).—Santamtrust, Bellville.

5062/79—HALFORD, Iris Viviene, 9010230002008, Mothwa Haven, Pretoria.—R. I. C. Taylor, Pretoria.

7028/79/ASR3—SPITZ, Charles, 9212215003007, 238 Charles Street, Brooklyn, Pretoria.—Ivan Spitz, Pretoria.

1348/80—FOURIE, Pieter Jacobus, 9409265004006, Voortrekkerweg 872, Wonderboom-Suid; Maria Jacomina Willemina Fourie, 0107200003005.—Santamtrust, Pretoria.

1272/80—BERRY, William Arthur, 5104135007008, Noordelike Lugverdedigingsektor, Devon; Hendrina Glaudina Susanna Berry, gebore V. d. Westhuizen, 5307120165000 (Nigel).—Santamtrust, Pretoria.

5693/80—KARSTEN, Loyd Keith, 3301045031001, Soetdoringlaan 48, Protea Park, Rustenburg; Elizabeth Johanna Sophia Karsten (Rustenburg).—Santamtrust, Pretoria.

13210/79—VAN SCHALKWYK, Catharina Maria Susanna, 9712230001001, Buffelsfontein, Pk. Mooinooi (Rustenburg).—Santamtrust, Pretoria.

3690/79—UYS, Jan Adriaan, 2504035018000, Broodrykstraat 415, Pretoria-Noord; Johanna Catharina Uys, 37100700 23008 (Pretoria-Noord).—Santamtrust, Pretoria.

4107/80—SMIT, Maria Dorothea, 356178209W, 603 Salvokop, Berea Park Avenue, Pretoria.—Schwartz Goldblatt Bloch & Gross, Pretoria.

8663/79 ASR1/G—MOORE, Max Ashwell, 1611195032001, 22 Hennops Road, Farrarmere, Benoni; Muriel Moore, 271 0280029002 (Boksburg).

2748/80—SWART, Jan Johannes, 3708245047001, Ridderstraat 44a, Rustenburg; Susanna Sophia Swart, 30 dae (Rustenburg).—Santamtrust, Pretoria.

14499/79—ZOPPER, Wilhelmina Elizabeth, 0311060013001, Varkfontein, Pk. Northam (Rustenburg).—Santamtrust, Pretoria.

1659/80—ERASMUS, Anna Elizabeth, Kilnerpark Chalet 17, Jacobusstraat, Kilnerpark.—Santamtrust, Pretoria.

7706/80—VAN DER RIET, Ernest Bertrand, 030607502 9000, Madeleyweg 78, Strubenvale, Springs; Maria Magdalena van der Riet, 1910060048005 (Springs).—Santamtrust, Pretoria.

12/80—EASTMAN, Elizabeth Anne, 3012090015001, 25 First Avenue, Linden, Johannesburg (Johannesburg).—Brian Toms, Johannesburg.

10704/79—POTGIETER, Susanna Dorathea, 0205270008 001, weduwee, Pretoriusstraat 39, Volksrust (Volksrust).—Volkskas, Marshalltown.

7674/80—FURSTENBERG, Francois Johannes, 101115500 9000, Barendstraat 58, Randgate; Cornelia Susanna Magrieta Furstenberg, gebore Jacobs, 1605220024009 (Randfontein).—Volkskas, Marshalltown.

1094/80—HAUPT, Abraham Barend de Villiers, 022528147 W, Blancalaan 53, Berario, Johannesburg (Johannesburg).—Volkskas, Marshalltown.

1941/80—VAN DER WALT, Louis Johannes, 030503500 5001, Flaminkstraat 42, Birch Acres, Kempton Park; Catharina Maria Joubert, 1602150019000 (Kempton Park).—Volkskas, Marshalltown.

2257/80—JANSEN, William Sternberg, 1001015022004, Langenhovenstraat 36a, Randhart (Alberton).—Volkskas, Marshalltown.

6310/80—LEIBENBERG, Petrus Jacobus, 2503275031004, Coalbrookweg 9, Suid Heuwels, Johannesburg; Catharina Johanna Petronella Liebenberg, 3004080029001 (Johannesburg).—Volkskas, Marshalltown.

5652/80—VAN DER WESTHUIZEN, Johannes Christoffel, 0205255009008, Skoolroete 10, Kempton Park-Wes; Cecilia Catharina van der Westhuizen, gebore Le Roux, 040829016 000 (Kempton Park).—Volkskas, Marshalltown.

12209/78—RALL, Petrus Andries Herodus, 3003305041007, Plot 148, Bushhill, Honeydew (Roodepoort).—Volkskas, Marshalltown.

10145/79—STYLIANOU, Charalambos Antoniou, 15021050 34007, Vermootenstraat 22, Bethal (Bethal).—Volkskas, Marshalltown.

7949/80—PIETERSE, Cathrina Christina, 0912280044005, Plot 25, Sweetwaters, Grasmere, Roodepoort (Roodepoort).—Volkskas, Marshalltown.

29/80—HUMAN, Cornelius Johannes Beyers de Wet, 150 7075012008, Plot 148, Klipfontein, Noord Rand, Eerste; Engela Petronella Johanna Magdalena Human, 1809030029 006 (Boksburg).—Volkskas, Marshalltown.

2994/80—SCHIEKE, Karel, 1109155039009, Dewetstraat 101, Krugersdorp-Noord (Krugersdorp).—Volkskas, Marshalltown.

1673/80—JORDAAN, Anna, 1212200003002, Plot 41, Chanclift, Krugersdorp (Krugersdorp).—Volkskas, Marshalltown.

13516/76—SCHOEMAN, Wilhelmus Jacobus, 2912315028 005, Tweede Laan, Florentia, Alberton, Gewysigde Tweede en Finale (Alberton).—Volkskas, Marshalltown.

4451/80—VAN DYK, Johann George, 3409055010003, Vandeventerstraat 12, Randgate; Coenraad Frederick van Dyk, gebore Du Preez, 3808080011003 (Randfontein).—Volkskas, Marshalltown.

8069/80—BOTHA, Wessels Jurie Jacobus, 3312135028005, Athlonelaan 55, Strubenvale, Springs; Magdelena Cathrina Petronella Christina Botha, 3812020020009 (Springs).—Volkskas, Marshalltown.

1367/80—MYNHARDT, Michael Johannes, 2212225042 000, Vierde Straat 84, Boksburg-Noord; Anna Francina Mynhardt, 2312060023006 (Boksburg).—Volkskas, Marshalltown.

3155/80—LOOTS, Nicolaas Jacobus, 0804115023009, Rebeccastraat 23, Florida; Johanna Sophia Loots, 1306140023003 (Roodepoort).—Volkskas, Marshalltown.

4452/80—DELPORT, Carolina Maria Catharina, 34071100 08004, Plot 121, Northdene; Jacobus Petrus Delport, 320928 5024000 (Vanderbijlpark).—Volkskas, Marshalltown.

13294/79—SMITH, Johannes Carel, 0402055019002, Lukas Meyerstraat 3, Beyerspark, Boksburg; Louisa Catharina Zacharia Smith, 0707200005007 (Boksburg).—Volkskas, Marshalltown.

5882/80—VAN EEDEN, Esther Maria Alida, 1506040022 001, Old Castlelaan 46, Crosby, Johannesburg (Johannesburg).—Volkskas, Marshalltown.

4781/80—HAASBROEK, Gert Christiaan, 1611205048005, St. Fillianslaan 43, Mayfair-Wes, Johannesburg; Maria Haasbroek, 2308310043000 (Johannesburg).—Volkskas, Marshalltown.

4906/80—FOURIE, Maria Elizabeth Margaretha, 15101600 4005, Plot 74, Bon Accord, Pretoria; Johannes Antony Fourie, 1509085002003 (Wonderboom).—Volkskas, Pretoria.

7577/80—BUITENDACHT, Hendrik Gerhardus, 051214501 4001, Lucasstraat 39, Rustenburg; Helena Wilhelmina Glaudia Buitendacht, 0609300024005 (Rustenburg).—Volkskas, Pretoria.

9146/80—NEL, Willem Andries, 1008235001007, Plot 116, Vastfontein; Catharina Petronella Nel, 1706300005007 (Wonderboom-Suid).—Volkskas, Pretoria.

6273/80—BENEKE, Johannes Cornelis Barend, 1901235037 005, Willie Behrenstraat 427, Pretoria Tuine; Maria Magdalena Beneke, 2112130022008.—Volkskas, Pretoria.

9240/80—GELDENHUYS, Cornelia, 9510290006005, Rusoordouetehuis, Brits (Brits).—Volkskas, Pretoria.

7138/80—DE SOUZA, Antonio, 1406105019002, Roodepoort 74, Warmbad (Warmbad).—Volkskas, Pretoria.

6569/80—SCHOEMAN, Martha Johanna, 2710300012004, Luttigstraat 488, Pretoria-Wes; Wilhelmus Hendrikus Schoeman, 2407165016002.—Volkskas, Pretoria.

6119/80—LOTTER, Willem Adriaan, 9007175001003, Oudestadt C4, Groblersdal (Groblersdal).—Volkskas, Pretoria.

8322/80—ERASMUS, Tjaart Andries, 0810235022003, Kameeldrift 82, Pretoria; Anna Susanna Catharina Erasmus, 356344409W, Volkskas, Pretoria.

8184/80—VAN ROOYEN, Ockert Johannes, 3707205028 001, Kockstraat 72b, Rustenburg (Rustenburg).—Volkskas, Pretoria.

1199/79—JACOBS, Jochelina Johanna, 1907150001001, Rietspruit, distrik Waterberg (Nylstroom).—Volkskas, Pretoria.

14317/80—TAIT, Michla Amelia Julienne, 3107110020005, Louis Trichardtstraat 29u, Volksrust, Gewysigde (Volksrust).—Volkskas, Pretoria.

10559/78—REYNDERS, Gertruida Maria Magaretha, voorheen Strydom, gebore Botha, 2806260006000, Jan Fiskaalstraat 81, East Lynn, Pretoria.—Volkskas, Pretoria.

6570/80—SWART, Hester Adriana Magdalena, 261005000 3007, Vindhellaweg 39, Valhalla, Pretoria; Jacobus Nicolaas Swart, 2411075001005.—Volkskas, Pretoria.

13774/79—LEEB-DU TOIT, Peter George, 0612265004004, 45 Soetooring Avenue, Rustenburg.—Sytrets Trust, Durban.

9588/79—VINE, Edgar Henry, 1903315012009, 98 Paul Kruger Drive, Monument Township, Krugersdorp; Edna Grace Vine, 2608090010008 (Krugersdorp).—Phillips & Osmond, Krugersdorp.

14723/79—MEYER, Pieter Jacobus Andreas, 3011245022 003, Wintergreenstraat 10, Kriel, Gewysigde (Kriel).—Standardtrust, Bloemfontein.

10320/79—CILLIERS, Gerhardus Saalman Bartholomeus, 9401165003006, Caledonstraat 41, Standerton (Standerton).—Barclays-Nasionale Bank, Ermelo.

7683/80—HOMANN, Martha Elizabeth, 1510150010004, Kubergwoonstelle 10, hoek van Declercq- en Breytenbachstraat, Ermelo (Ermelo).—Barclays-Nasionale Bank, Ermelo.

6892/79—SCOTT, Michael Wentworth, 4508025111004, 84 Van Bergen Street, Brackenhurst, Alberton (Alberton).—S. Scott, Wadeville.

596/80—KLOPPER, Maria Aletta, 356253272W, Ons Tuis, Soutpansbergweg, Riviera, Pretoria.—Volkskas, Pretoria.

11958/78—FLETCHER, Roy Kerr, 351300966, 23 North Street, Ravensklip, Boksburg; Rowena Fletcher, 331300907 (Boksburg).—J. B. Hugo & Cronje, Krugersdorp.

2814/79—ROOS, Peter Gysbert, 0903015036002, 28 De Wet Street, Horison, District of Roodepoort (Roodepoort).—J. Gus Ackerman, Roodepoort.

2982/79—LOMBARD, Johannes Stephanus, 2704135014004, Pusela, distrik Letaba, Gewysigde (Tzaneen).—Joubert & May, Tzaneen.

8201/79—VAN HEERDEN, Eben Haezer, 0611205022001, 5 Willie Smit Street, Roads Gardens, Vereeniging; Josephine van Heerden, 0810040040000 (Vereeniging).—Nest, Mentzel, Rudman & Co., Pietersburg.

5420/80—ROBERTSON, Brian, 5802135137002, Mine Single Quarters, Elandsrand (Carletonville).—A. Robertson, Klerksdorp.

4751/80—BLIGNAUT, Hendrik Petrus, 0510215020007, Woonstel 310, Silwerkroon, Winnipegstraat, Raceview, Alberton, Eerste (Alberton).—Klopper, Jonke R. & Vennote, Alberton.

12402/79—RICHARDS, Johannes Andries Cornelius, 080 8214023009, Roossenekal, distrik Middelburg; Hester Susara Magdalena Susanna Richards, 2308060059008 (Middelburg). —Brandmuller & Els, Middelburg.

2044/80—MOSTERT, Dirk Cornelius Wouter, 5805135153 002, Hondesentrum, Voortrekkerhoogte.—Boland Bank, Pretoria.

8128/79—JOUBERT, Johannes Jacobus, 0407285008006, Klipstapel, distrik Heidelberg (Heidelberg).—Von Geusau, Joubert & Ackermann, Heidelberg.

284/76—LIEBENBERG, Aletta Sophia, gebore Joubert, 034822381W, Susan Strydomtehuis, Gordonstraat, Colbyn, Pretoria, Gewysigde Eerste en Finale.—Douglas & Botha, Aliwal-Noord.

9274/71—BEUKES, Ockert Jonathan, 314582819W, Mainstraat 89, Witfield; Hester Maria Wilhelmina Beukes, gebore Maritz, 007981270W (Boksburg).—Leon J. J. van Rensburg, Germiston.

6646/79—JOHNSON, Arthur Leslie, Sterkfontein Hospital, Sterkfontein Road, Krugersdorp (Krugersdorp).—M. J. Smuts Cronje & Hoppe, Krugersdorp.

10684/79—FICK, Maria Edith, 9604210002002, Solheimouetehuis, Germiston (Germiston).—Snijman & Smullen, Vereeniging.

2429/79—VAN NIEKERK, Johannes Jacobus, 200915500 8005, Vanzylstraat 11, Schweizer-Reneke, Eerste Likwidasie. —Volkskas, Klerksdorp.

6103/80—TAKTIKOS, Konstantinos, 93 Hertz Boulevard, Vanderbijlpark; Evangelia Taktikos, 4411090100103 (Vanderbijlpark).—Santamtrust, Port Elizabeth.

5127/80—VAN DER WALT, Josias Johannes, 47090650 11001, Hendrik Vandermerwestraat 13, Rustenburg; Martha Magdalena van der Walt, gebore Wolmarans, 4901100010003 (Rustenburg).—Van der Walt & Combrink, Rustenburg.

1092/80—HONIBALL, Willem, 1908095010008, Deborahstraat 1019, Pretoria-Tuine.—Die Sentrale Eksekuteurskamer, Pretoria.

10077/78/ASR 3A—VAN DYK, Johanna Susanna, 041111 0021002, 68 Escombe Street, Geduld Extension, Spring; Carl Hendrick Petrus van Dyk, 1311135029008 (deceased) (Springs). —Charles Sherman, Levin & Prosser Inc., Springs.

13507/79—SNYMAN, Susara Aletta, 3[illegible]4115W, Danie Theronstraat 166, Pretoria-Noord.—E. D[illegible]ras & Kie., Brits.

9823/79—GALATIS, Dennis, 9[illegible]7145008000, Mountain View, Johannesburg. First (Johannesburg).—Wright, Rose-Innes, Louw & Wise, Germiston.

5689/80—KORN, Siegfried, 1108095010005, 27 Northdene Avenue, Brakpan; Susan Korn, 1412050018007 (Brakpan).—Wright, Rose-Innes, Louw & Wise, Germiston.

12682/79—VAN DER VYVER, Bernardus Lambertus, 1112 095020006, Goedehoop, distrik Bethal, Eerste Likwidasie en Distribusie; Christina Maria van der Vyver, gebore Weldon, 1508260009007 (Bethal).—Nimrod Smit & Dewet, Bethal.

2937/79—CRAWFORD-MUNRO, Patrick Charles, 421104 5038006, Piet Retiefstraat 26, Nelspruit; Magrietha Elizabeth Crawford-Munro, 4401150021000 (Nelspruit).—Delport, De Beer & Hough, Nelspruit.

5460/80—SCHOEMAN, Stephanus Johannes, 2010025022 002, Diamanstraat 278, Claremont, Pretoria; Johanna Elizabeth Christina Schoeman.—Van Zyl, Le Roux & Hurter, Pretoria.

5428/80—BOTHA, Ethel Gwendoline, 971005484, Lancasterlaan 100, Craighall, Johannesburg (Johannesburg).—Santamtrust, Port Elizabeth.

5714/77—VILJOEN, Johannes Hendrik, 3405205025008, Gedeelte 77, Zilkaatsnek, distrik Brits (Brits).—Jonker Van Onselen & Van der Walt, Brits.

12367/78—KRUGER, Barend Johannes, 0101235009004, Vanbovenstraat, Sannieshof; Jacomina Dhristiana Kruger, gebore Hartzenberg, 0504030015003 (Delareyville).—Duvenhage & Van der Merwe, Kuruman.

610/80—ROBBERTSE, Andre Christo, 6101065080004, Marjonethof 10, Cannaweg, Primrose (Germiston).—A. N. Robbertse, Primrose.

6287/79—CASSIM, Fatima Ismail, 800030097A, Kerkstraat 351, Potchefstroom (Potchefstroom).—Waks, Williams, Müller Ingelyf, Potchefstroom.

2352/80—BEZUIDENHOUT, Aletta Sophia, gebore Janse van Vuuren, 354487386W, weduwee, Ons Hulde, Eleazerstraat, Potchefstroom (Potchefstroom).—Fleischacks, Potchefstroom.

13191/79—KRAUSE, Benjamin, 1405055040000, Bridgeslaan 82, Westonaria; Magdalena Christina Krause, voorheen Bester, gebore Van der Merwe, 2110100019004 (Westonaria).—Smit & Coetzee, Vereeniging.

1841/79—EMDIN, Samuel, 1003015027009, 9 Hyde Close, Hyde Close Road, Hyde Park, Johannesburg (Johannesburg). —Karlin Isaacs Wolpert & Co., Johannesburg.

9333/79—TERBURGH, Johanna Susanna Magdalena, 960 3240005001, Linksweg 1, Rossmore, Johannesburg (Johannesburg).—D. J. de Villiers, Scholtz & Van der Walt, Johannesburg.

3603/80—FOURIE, Johannes Jacobus, 0704175019006, 36 Kruger Street, Geduld Extension, Springs; Maria Dorothea Fourie, 1109050011004 (Springs).—Haarhoff & Cohen, Springs.

481/79—BYLIEFELDT, Sheila Elizabeth, gebore Toland, 5102030058100, Sakaboelastraat 4, Birch Acres-uitbreiding 2, Kempton Park; Theunis Jacobus Byliefeldt, 4811205013 002 (Kempton Park).—Marius F. Botha, Kempton Park.

707/79—JASSAT, Mahomed, 0611285036053, 130 Bhagalia, Cassim Park, Ermelo (Ermelo).—Adams & Adams, Pretoria.

12176/78—JANSE VAN VUUREN, Johannes Marthinus Gerhardus, 1102265018005, Smitstraat 251, Rustenburg; Anna Susanna Janse van Vuuren, gebore Scheepers (Rustenburg). —Jac H. Smit, Leonard & Breytenbach, Rustenburg.

14518/79—LOOTS, Elizabeth Maria Carolina, 9912030006 008, Zionplaas, Koster (Koster).—Jac H. Smit, Leonard & Breytenbach, Rustenburg.

5098/80—ROETS, Dirk Daniel, 3007285025005, Kockstraat 42, Rustenburg (Rustenburg).—Jac H. Smit, Leonard & Breytenbach, Rustenburg.

6182/79—HATTINGH, Jan Johannes Van As, 25120350 55005, 31ste Laan 311, Villieria, Pretoria.—W. J. S. Bekker, Pretoria.

10416/78—CAMBANIS, Constantine John, 964023205W, 472 15th Avenue, Rietfontein, Pretoria. First.—Weavind & Werksmans Inc., Pretoria.

3399/74—ADDISON, Eric John, 034879094W, Coetzeelaan 23, Selection Park, Springs, Gewysigde; Desire Theron, voorheen Addison, gebore Stannard, 365117100 (Springs).—J. R. du Plessis & Burger, Springs.

4508/80—STANDER, Hester Maria, 120315004009, Rosestraat 83, Florida, distrik Roodepoort; Adriaan Hendrik Stander, 0505095004006 (Roodepoort).—A. H. Stander, Florida.

4026/80—DU TOIT, Louis Lukas, 4711045088000, Zebralaan 13, Middelburg (Middelburg).—Standardtrust, Pretoria.

11748/79—HABIG, Catharina Beatrix, 0511200038004, Hunterstraat 46, Nelspruit; Frederik Cornelis Habig (Nelspruit).—Standardtrust, Pretoria.

907/80—JOUBERT, Johannes Jacobus, 0601255002003, Kerkstraat 4, Ermelo (Ermelo).—Standardtrust, Pretoria.

2450/80—PAGE, Dudley Fielder, 0910245028006, Grobler Street, Ermelo (Ermelo).—Standardtrust, Pretoria.

5822/80—VENTER, Johannes Petrus, 2010105029000, Camden Kragsentrale; Martha Katharina Magdalena Venter, 351 0150011000 (Ermelo).—Standardtrust, Pretoria.

11987/78—DE PONTE, Fernanda, 2105100020101, Plot 34, Waterpan, Westonaria (Westonaria).—Standardtrust, Johannesburg.

8579/79—DUVENHAGE, Sanuel Robert, 3212245027006, Dyerstraat 103, Balfour, Aanvullende Eerste en Finale (Balfour).—Standardtrust, Johannesburg.

2700/80—GOUWS, Daniel, 1501095009003, Sewende Straat 4, Maraisburg; Cornelia Elizabeth Gouws, gebore Deyzel, 170 7200041001 (Maraisburg).—Standardtrust, Johannesburg.

4154/80—KROHN, Hans Jurgen August Johannes, 240622 5038006, 2 Constantia Flats, Fitzgerald Road, Orkney (Klerksdorp).—Standardtrust, Johannesburg.

3761/80—SMITH, James Ross, 3304135047002, 31 Radloff Street, Wilkoppies, Klerksdorp; Alice Mary Culling, 310728 0020009 (Klerksdorp).—Standardtrust, Johannesburg.

476/80—ROBERTSON, Thomas McNaughton, 090517502 500, 1305 Blaauwberg, Kapteijn Street, Hillbrow (Johannesburg).—Van Hulsteyn, Duthie & Saner, Johannesburg.

4956/80—ERASMUS, Anna Frederika, 060420000203, Grietasvlakte, Ellisras (Ellisras).—Syfrets Trust, Pretoria.

2453/80—PELSER, Hermanus Stephanus, 1111025012000, Plot 54, Goedehoop, Meyerton (Meyerton).—Syfrets Trust, Pretoria.

11043/79—GLAZER, Joseph, 0309215004000, 21 Athlone Avenue, Sandringham, Johannesburg (Johannesburg).—F. Shain, Germiston.

13626/79—SHEARAR, Rees Alwyn, 2606085040006, 14 Healy Road, Malvern East, Germiston (Johannesburg).—Raymond G. Bradley, Johannesburg.

12027/79—GARACH, Tribhovan Karsandas, 0408075018 056, 308 Patel Street, Actonville, Benoni; Premkunvar Garach, 0803220035056 (Johannesburg).—Raphaely-Weiner, Johannesburg.

8088/79—SIVE, Julius, 9104245002002, 164 Lyndhurst Road, Lyndhurst, Johannesburg (Johannesburg).—Broomberg, Graff & Korb, Johannesburg.

11831/79—JOEL, Minnie, 4 Carmen Court, 103 Dunbar Street, Bellevue, Johannesburg (Johannesburg).—Broomberg, Graff & Korb, Johannesburg.

14053/79—KARK, Thelma Mignon, 9908130014009, 302 Inanda Park, Fourth Avenue, Inanda (Johannesburg).—Arthur Andersen & Co., Johannesburg.

5266/79—ELLEMDEEN, Goolam Hoosen, 800030267, 192 Paarl Street, Actonville, Benoni; Caroline Ellen Pillay (Benoni).—H. E. Saden, Johannesburg.

13423/76—PATEL, Chimanlal Mangalbhai, 800024175, 18a 18th Street, Vrededorp, Johannesburg; Mangalben Patel (Johannesburg).—Ismail Ayob & Associates, Johannesburg.

11091/79—THOMPSON, Grace, 331298641W, 84 Leicester Road, Kensington, Johannesburg (Johannesburg).—Bell, Dewar & Hall, Johannesburg.

2477/80—HUNT, George Kenneth, 16008205051005, 43 Orwell Street, Kensington, Johannesburg (Johannesburg).—Bell, Dewar & Hall, Johannesburg.

12800/79—NEWBY-FRASER, Winifred, 8209180001009, 66 Jellicoe Avenue, Melrose, Johannesburg (Johannesburg).—Bell, Dewar & Hall, Johannesburg.

3200/79—STEWART, Marian Joy Berrange, 1809130039 003, 13 St David's Road, Houghton, Johannesburg, Amended First and Final (Johannesburg).—Arthur Andersen & Co., Johannesburg.

14597/79—VAN DER VEEN, Henry, 2602255039001, 307 Earlsmere, Princess Place, Parktown (Johannesburg).—Cranko Nackan & Karp, Johannesburg.

1359/80—JOUBERT, Hendrik Lodewyk, 361398756W, 8 Christiaan de Wet Road, Discovery, Roodepoort (Roodepoort).—T. Mills, Florida.

13147/79—STEWART, Michael Patrick, 5709095032000, 55 Faunce Road, Robertsham, Johannesburg (Johannesburg).—Cliffe Dekker & Todd, Johannesburg.

14369/79—SULSKI, Annie Doris, 920913004003, Witwatersrand Jewish Aged Home, George Avenue, Sandringham, Johannesburg (Johannesburg).—Pollard & Lewin, Johannesburg.

5091/77—HAJAT, Hassen Essop, 800013753, 1749 Second Street, Bakerton (Springs).—N. G. Patel Cachalia & Loonat, Johannesburg.

11183/79—FOSTER, Arthur, 3003215066003, 11 Amanda Avenue, Glenanda North, Johannesburg; Helena Elizabeth Foster, 3404080033005 (Johannesburg).—Barclays National Bank, Johannesburg.

7656/80—BOSHOFF, Hester Jacoba, 57 Headford Avenue, Crosby, Johannesburg (Johannesburg).—Barclays National Bank, Johannesburg.

6721/80—VAVASSORI, Lorenzo, 150195027104, 4 Jasmin Court, 90 Yeo Street, Bellevue, Johannesburg; Gianna Vavassori, 960021724W (Johannesburg).—Barclays National Bank, Johannesburg.

SMIT, Jan Gabriel, 331296111W, widower, 3 17th Street, Malvern, Johannesburg (Johannesburg).—Barclays National Bank, Johannesburg.

6340/80—SOLOMON, Harry, 0311225029009, The Ex-Serviceman's Red Cross Home, George Avenue, Sandringham, Johannesburg (Johannesburg).—Barclays National Bank, Johannesburg

8728/80—BISHOP, Aileen Zenobia, 0606190003008, Caro House, 24 Lawley Avenue, Northcliff, Johannesburg (Johannesburg).—Barclays National Bank, Johannesburg.

8655/80—LIESCHING, Claire Stewart, 0107300006007, 45 Bruton Road, Bryanston, Sandton, First (Randburg).—Barclays National Bank, Johannesburg.

ROODT, Andries Johannes Taylor, 1508315001009, 85 Proserpin Road, Mayfair West, Johannesburg; Nancy Roodt, 2404210002004 (Johannesburg).—Barclays National Bank, Johannesburg.

2102/80—ESSOP (Waja), Hassan, 1704305045052, 6287 Saffier Street, Lenasia, Johannesburg; Fatima Essop, 140529004 1018 (Johannesburg).—Ismail Ayob & Associates, Johannesburg.

13580/77—SAVANVALA, Ebrahim Suliman, 800002324A, 23 Shrike Street, Lenasia, Amended First and Final; Zalaka Savanvala, 800401126 (Johannesburg).—Ismail Ayob & Associates, Johannesburg.

2934/79—VAN BERKEL, Gerardus Johannes, 1307115037 002, 105 Albertyn Mansions, 6 Corlett Drive, Illovo, Johannesburg (Johannesburg).—Frank Munnik & Zulberg, Johannesburg.

158/80—SYKES, Ivy May, 5 Valerie Road, Kibler Park, Eikenhof (Johannesburg).—Webber Wentzel & Co., Marshalltown.

2611/78—FRANK, Lazarus, 9911105010002, Plot 22, Amorosa Holdings, Velera Street, Amoroso, District of Roodepoort, Liquidation (Roodepoort).—Segal & Hoffmann, Johannesburg.

1260/80—MURCIA, Elizabeth Cecile Marquirte Botha, 22042700390 01W, 103 Dimona Flats, Honey Street, Berea, Johannesburg (Johannesburg).—Bowens, Johannesburg.

4854/79—SHROCK, Anna, born Josephson, 0510220023004, 81 Vannin Court, 26 Pietersen Street, Hillbrow, Johannesburg (Johannesburg).—Bowens, Johannesburg.

6971/78—THOMPSON, Mark Murray, 0407175023008, 68 Sixth Avenue, Illovo, Johannesburg, Supplementary Liquidation and Distribution (Johannesburg).—Metboard, Marshalltown.

6779/80—CHINN, Clement Gordon, 0101165008000, 15 Carlyle Road, Brentwood Park (Springs).—Barclays National Bank, Johannesburg.

6/78—CERONIO, Zacharia De Beer, 1112105042008W, 95 Gordon Road, Judith Paarl, Johannesburg (Johannesburg).—Bowens, Johannesburg.

2248/78—FARAH, Jubran, 20 O'Hara Road, Turffontein, Johannesburg (Johannesburg).—E. Smith, Johannesburg.

4235/79—GREEF, Russel Gerald, 331325932, 53 Married Quarters, Luipaardsvlei Estate, Krugersdorp; Jeanette Mary Greef, 4004240048007.—E. Smith, Johannesburg.

984/77—WESTWATER, John James, 3202035033009, 22 Arthur Mansions, Hillbrow, Johannesburg (Johannesburg).—E. Smith, Johannesburg.

11791/77—DE MENESES, Maria Sardinha, 324577914, 26 Van der Linde Road, Bedfordview, Johannesburg, Second and Final (Johannesburg).—Edward Nathan & Friedland Inc., Johannesburg.

4634/79—ESSA, Vally, 1704245036054, 4 Pritchard Street, Johannesburg; Emin Vali Essa, 800053024 (Johannesburg).—S. G. M. Mia, Marshalltown.

2468/80—BHOOLA, Moosa Mohamed, 012302501505, 41 Beril Street, Lenasia, Extension 5, Johannesburg; Mariam Moosa Bhoola (Johannesburg).—N. G. Patel Cachalia & Loonat, Fordsburg.

7547/80—ODENDAAL, Izak Johannes, 1007245008002, 91 Maud Street, Florida; Margaret Ann Odendaal (Roodepoort).—Standardtrust, Johannesburg.

7558/80—SCHEEPERS, Francina Johanna Wilhelmina, 180 5140002008, Paul Krugerstraat 872, Mayville; Jacobus Johannes Scheepers, 1908055001005.—Barclays-Nasionale Bank, Sunnyside.

14816/79—COLEMAN, Charles Herbert, 1201235002004, Haarhoffstraat 70, Groblersdal; Cornelia Jacoba Elizabeth Coleman, gebore Van Vuuren, 1911230016005 (Groblersdal).—Barclays-Nasionale Bank, Sunnyside.

1662/80—FISCHER, Andreas, 0806025011107, 61 Van Riebeeck Street, Nylstroom (Nylstroom).—Barclays National Bank, Sunnyside.

12973/79/3C—BOTHA, Herculaas Albertus, 0312085010006, 2 McDonald Street, Middelburg (Middelburg).—Barclays National Bank, Sunnyside.

11112/79—COETZER, Susara Margaretha Jacoba, 261229 0012004, Frenchstraat 25, Witbank (Witbank).—Barclays Nasionale Bank, Sunnyside.

3676/80—VAN DER MERWE, Maglena Catherina Susanna, 2103310013008, Holmesweg 12, Valhalla, Pretoria; Jan Adriaan van der Merwe, 2104195008006.—Barclays-Nasionale Bank, Pretoria.

7470/80—D'ELBOUX, Stephenson William Reginald, 180 3095043002, 87 Mica Street, Proclamation Hill, Pretoria.—Barclays National Bank, Pretoria.

7140/80—DA SILVA, Anselmo Moutinho, 3003275049105, 101 Evelea Flats, 315 Walker Street, Muckleneuk, Pretoria; Natalina Rodriques dos Santos Silva, 2403270045101.—Barclays National Bank, Pretoria.

13203/79—OBERHOLZER, Lourens Petrus, 1105215015 005, Liverpool, Pk. Sentrum, Eerste en Finale en Herverdelingsooreenkoms; Elizabeth Cornelia Oberholzer, gebore Swanepoel, 1803070016007 (Thabazimbi).—Barclays-Nasionale Bank, Pretoria.

3789/79—WHITSON, Magrietha Elizabeth, born Boshoff, Plot 17, Tati River Plots.—Barclays National Bank, Pretoria.

6403/80—BURGER, Willem Jacobus, 1305155024005, 10de Laan 459, Gezina, Pretoria.—Barclays-Nasionale Bank, Pretoria.

13193/78—VAN HUYSSTEEN, Jozef Fourie, 1412265039 004, Die Kronendal, Pretoriusstraat 650, Arcadia, Pretoria, Aanvullende Tweede en Finale.—Barclays-Nasionale Bank, Pretoria.

14302/79—O'NEILL, Mattheus Johannes, 2012045043000, Voortrekkerstraat 26, Witbank; Talitha O'Neill, gebore Jordaan (Witbank).—Stegmanns, Pretoria.

4633/80—GIBB, Richard, 1001125002003, Simmer Court 20, Driehoekweg 60, Germiston; Judith Gibb, 0803220005000 (Germiston).—Santamtrust, Pretoria.

3941/80—McDONALD, Cornelius Johannes, 1305175005 000, Gloucesterlaan 48, Dalview, Brakpan; Jacomina Hendrina Christina McDonald, 2111120004000 (Brakpan).—Santamtrust, Sunnyside.

12357/79—GIBSON, Dudley Robert, 9402095007000, Boschkoppies, Louis Trichardt (Louis Trichardt).—H. T. Franz, Sunnyside.

21/80—VAN GREUNEN, Noël, 2612250038007, Bedford Centre, Smith Street, Bedfordview, Supplementêre (Edenvale).—Barclays National Bank, Johannesburg.

526/80—MINIE, Lourens Abram, 5008295065005, Bainesstraat 8, Vanderbijlpark; Susanna Elizabeth Johanna Minie, 360954507W (Vanderbijlpark).—Santamtrust, Johannesburg.

9810/78—SCHOOMBIE, Maria Magrietha, 361395182W, Fischerstraat 3, Krugersdorp-Wes (Krugersdorp).—Santamtrust, Johannesburg.

5789/69—VAN NIEKERK, Willem Petrus, 335674205, Nicolpiek 4, Stilfontein, Gewysigde Aanvullende Eerste en Finale; Maryna Elizabeth van Niekerk, gebore Van den Heever, 370946462 (Klerksdorp).—Santamtrust, Johannesburg.

2479/80—DE KOCK, Susanna Maria, 3001070040006, Witrand Verpleegsterstehuis, Privaatsak X253, Potchefstroom (Potchefstroom).—Santamtrust, Johannesburg.

20/80—GROBLER, Joachim Marthinus, 1102025004006, Kruisstraat 48, Potchefstroom; Cecilia Petronella Grobler (Potchefstroom).—Santamtrust, Johannesburg.

1544/79—MARAIS, Frederik Abraham Jacobus, 33091750 65004, Plot 216, Mullerstuine, Vanderbijlpark; Wilhelmina Jacoba Marais (Vanderbijlpark).—Santamtrust, Johannesburg.

1967/80—MAREE, Evert Nicolaas Johannes, 1602035001 009, Pk. Bray, Noord-Kaap, Vryburg; Jacomina Hendrina Maree, 3405160051007 (Vryburg).—Santamtrust, Johannesburg.

5529/78—COOPER, Thomas, 4012095066008, Devilliersstraat 15, Glenharvey, Westonaria, Aanvullende; Anna Dorothea Cooper (Westonaria).—Santamtrust, Johannesburg.

1741/79—BROODRYK, Johannes Hendrik, 0708065030007, wewenaar, Nieuwestraat 46, Potchefstroom, Verbeterde Eerste en Finale en Herverdelingsooreenkoms (Potchefstroom).—Santamtrust, Johannesburg.

2531/80—VAN NIEKERK, Gilliam Machiel, 3111305036 008, Maudstraat 49, Florida; Aletta Maria van Niekerk, 341 2110027004 (Roodepoort).—Santamtrust, Johannesburg.

1731/80—AGENBACHT, Johannes Frederik, 1912295036 003, Derde Laan 132, Mayfair, Johannesburg; Fredrika Johanna Susanna Agenbacht, gebore Baard, 1806200022001 (Johannesburg).—Santamtrust, Johannesburg.

7304/80—MERCER, Jessie Swanton, 0502020017005, 86 Northdene Avenue, Brakpan (Brakpan).—Barclays National Bank, Johannesburg.

8652/80—KRUGER, Andries Jan Christiaan, 2001055063 008, 51 Eighth Avenue, Roodepoort North; Sarah Johanna Kruger, 2202040056004 (Roodepoort).—Barclays National Bank, Johannesburg.

6301/79—GARBUTT, Roy, 3203305082106, 94 Sapphire Street, Farrarmere Extension 21, Benoni; Auriel Gladys Garbutt, 3209160095109 (Benoni).—I. Kramer & Wesemann, Benoni.

57/80—RAHME, Simon Anthony, 0608115015000, 376 Louis Botha Avenue, Maryvale, Johannesburg (Johannesburg).—I. Maltz, Johannesburg.

202/80—MORRIS, Fanny, 1606110036004, 69 Seventh Avenue, Highlands North, Johannesburg, Second and Final (Johannesburg).—Syfrets Trust, Marshalltown.

5947/80—ANDERSON, Margaret Carol, born Gascoyne, 2012220055001, 36 Doorn Street, Observatory, Johannesburg, First Liquidation and Distribution (Johannesburg).—Syfrets Trust, Marshalltown.

7732/80—CHRISTENSEN, Mabel Florence, 9508180010 004, 38 Elaine Avenue, Homelake, Randfontein; Anders Edward William Christensen, 9808225009007 (Randfontein).—Barclays National Bank, Johannesburg.

13198/79—MICHALARO, Anastacia, born Angelo, 101122 002200, 98 Eugenia Road, Primrose Hill, Primrose, Germiston (Germiston).—Syfrets Trust, Marshalltown.

3441/77—DRYBURGH, James Stuart, 0403075008009, 48 Second Avenue, Illovo, Sandton, Supplementary Second and Final Distribution (Johannesburg).—Syfrets Trust, Marshalltown.

3226/80—ROODT, Michael Engelbrecht, 1805075027004, 31 East Street, Oakdene, Johannesburg, First Liquidation and Distribution (Johannesburg).—Syfrets Trust, Marshalltown.

4163/80—LIPMAN, Sydney, 2601275005000, 10 Ivy Road, Norwood, Johannesburg, First Liquidation and Distribution (Johannesburg).—Syfrets Trust, Marshalltown.

14615/79—BUTTLE, Marguerite, formerly Potgieter, born Porter-Smith, 2008080010003, 40 Dandrama, Alwynspoort, Eikenhof (Johannesburg).—Syfrets Trust, Marshalltown.

6577/80—WRIGHTSON, Cyril Francis Fréville, 951021500 2006, P.O. Magaliesburg (Krugersdorp).—Syfrets Trust, Marshalltown.

5177/79—TRUTER, Muriel Gladys, previously Steyn, born Truter, 9711070007003, Nazareth Home 1, Webb Street, Yeoville, Johannesburg, Second Liquidation and Distribution (Johannesburg).—Syfrets Trust, Marshalltown.

1495/80—THOMAS, Marcelle Therese, born Williams, 240 8120019, 241 Robin Road, Rynfield Agricultural Holdings, Rynfield, Benoni (Benoni).—Syfrets Trust, Marshalltown.

12639/79—KINGMA, Phyllis, 2305160004009, Hagartstraat 9, Brenthurst, Brakpan; John Charles Thomas Kingma (Brakpan).—Santamtrust, Johannesburg.

5373/80—FOWLER, Adeline Mary, born Rauff, 06050700 37003, 17 Kloof Road, Bedfordview (Germiston).—Syfrets Trust, Marshalltown.

11990/79—MILITZ, Harold Peter Gunther, 2110095057001, 14 Arlington Road, Bryanston, Sandton (Randburg).—Syfrets Trust, Marshalltown.

3939/80—LOVELL, Bertha Mary, 0512290025000, 5 Daventry Road, Bryanston, Sandton, First Liquidation and Distribution (Randburg).—Syfrets Trust, Marshalltown.

12262/77/2—WINTZ, Rosa, 965092544, 43 Fourth Avenue, Bezuidenhouts Valley, Johannesburg, Amended First and Final (Johannesburg).—Syfrets Trust, Marshalltown.

11379/79/9—OSBORNE, Niall John, 53100751402, 61 Mulder Street, Florida Park, Florida (Roodepoort).—Syfrets Trust, Marshalltown.

5250/80—LINDEQUE, Johannes Burgers, 9603165004005, Avondrusouetehuis, Vereeniging (Vereeniging).—Standardtrust, Johannesburg.

4164/80—LOMBARD, Christoffel, 1209265011003, Mooreweg 7, Orkney; Francina Stoffelina Lombard, gebore Vosloo, 2009080038002 (Orkney).—Standardtrust, Johannesburg.

9873/79/3A—WOLMAN, Nathan, 1906125014008, Boschpoort Farm, P.O. Box 475, Delmas (Delmas).—Scher, Posner & Partners, Johannesburg.

11642/79—LEVY, Selwyn Hugh, Los Angeles United States of America (Johannesburg).—Fluxman Rabinowitz & Partners, Johannesburg.

11543/79—SMITH, William Main, 0705205028008, widower, Ascot Hotel, Grant Avenue, Norwood, Johannesburg (Johannesburg).—Van Hulsteyn Duthie & Saner, Johannesburg.

4084/80—ENGELBRECHT, Phillipina Pauline, 1306260021 019, 10 Tafelberg Avenue, Bosmont, Johannesburg; William Engelbrecht (Johannesburg).—Van Hulsteyn Duthie & Saner, Johannesburg.

1289/79—COLLINSON, William Metcalf, 4309185050102, 3 Rosebank Road, Dunkeld, Johannesburg (Johannesburg).—Raphaely-Winer, Johannesburg.

7816/79—SOLOMON, Bertie Arthur, 311336019, 306 Gardens Hotel, O'Reilly Road, Berea, Johannesburg (Johannesburg).—Moodie & Robertson, Johannesburg.

3437/80—KAHN, Barbara, 1406080022005, 307 Magaliesberg, corner of Mitchell and Fifth Avenue, Berea, Johannesburg (Johannesburg).—L. Sidelsky, Johannesburg.

3381/80—SAAYMAN, Reuben Cornelius, 1901035014008, Hoewe 76, Mapleton, Boksburg; Gertina Petronella Saayman, 2905080005000 (Boksburg).—Standardtrust, Johannesburg.

6656/80—SMITH, Edith Mary, 2 Sloane Street, Bryanston (Johannesburg).—Standardtrust, Johannesburg.

4334/80—PANTON, James Couzens, 0810025027006, Germiston (Germiston).—Standardtrust, Johannesburg.

11750/79—HALLIS, Sue Faith, 4004080045006, 3 St Mathew Road, Hurleyvale, Edenvale; Thomas Richard Hallis, 4312135018005 (Edenvale).—Standardtrust, Johannesburg.

4454/80—D'HANGEST D'YVOY, Louis Gaspar Adrien, 010 2215007000, 7 Clonmore Road, Bryanston, Sandton (Randburg).—Standardtrust, Johannesburg.

2203/79—POPPER, Evelyn Nora, 9905160001005, 33 Third Avenue, Illovo, Sandton (Johannesburg).—Cliffe, Dekker & Todd, Johannesburg.

3517/80—MAKEPEACE, Frank George, 4304205041009, 18 Geranium Street, Brackenhurst Extension 2, Alberton (Alberton).—Moss Cohen & Partners, Johannesburg.

14755/79—SYMES, Paul Ellis, 3008205053002, 147 Ann Road, Simba, Sandton, First Liquidation and Distribution (Randburg).—Syfrets Trust, Marshalltown.

1769/80—GARDNER, Peter Shields, 2605135055105, 67 Seventh Street, Parkhurst, Johannesburg; Joan Gardner, 281 2060045107 (Johannesburg).—Security Executor and Trust Co., Johannesburg.

3351/79—WHITE, Ernest Steven, 360917814W, 34 Liebenberg Street, Roodepoort (Roodepoort).—D. J. Williams, Roodepoort.

11904/69—KOLBE, Frederik Fortunatus, 309523210W, Cardiganstraat 4, Dalview, Brakpan, Tweede en Finale Supplementêre Eerste en Finale Likwidasie en Distribusie (Brakpan).—F. le Roux & Vennote, Brakpan.

7968/79—PARTRIDGE, Thomas, 1403235053001, 45 Iris Road, Norwood, Johannesburg (Johannesburg).—Miss Stella Partridge, Johannesburg.

616/80—VORSTER, Ellen Grace, 3512080056006, Jonesstraat 19, Krugersdorp-Wes; Bartholomeus Jacobus Vorster (Krugersdorp).—Santamtrust, Johannesburg.

1594/80—DUVENHAGE, Douw Gerbrand Steyn, Plot 648, Daleside; Hendrina Jacoba Duvenage (Meyerton).—Santamtrust, Johannesburg.

12128/79—MARAIS, Albertus Johannes, 4312275039001, Vierde Laan 45, Parktown-Noord; Maria Elizabeth Marais, 470713006 (Johannesburg).—Santamtrust, Johannesburg.

3357/79—BLATT, Andries Johannes Bester, 2404255034 003, Virtopweg 12, Gerdview, Germiston, Tweede en Finale; Maria Susanna Blatt, gebore Le Roux, 2503010029008 (Germiston).—Santamtrust, Johannesburg.

8368/79—JOUBERT, Maria Elizabeth, gebore Smith, 510 9100019003, Swartbergiaan 27, Posbus 171, Rondebult, Germiston (Johannesburg).—Santamtrust, Johannesburg.

9394/79—ENGELBRECHT, Marthinus Andries Louis, 357 888223W, Porgesstraat 21, Randfontein; Wilhelmina Christina Engelbrecht (Krugersdorp).—Santamtrust, Johannesburg.

5749/80—ERASMUS, Abel Hendrik, 0512025011002, Kitsonstraat 34, East Town, Johannesburg (Johannesburg).—Syfrets Trust, Marshalltown.

9519/79—BAM, Cornelius Jacobus, 4109195015008, Hilliardstraat 23, Morehill, Benoni; Hester Fransina Bam, gebore Swart, 4509290024005 (Benoni).—Santamtrust, Johannesburg.

534/80—NORMAN, Ettiene Johan, 6105255058001, Derde Straat 41, Albertskroon, Johannesburg (Johannesburg).—Santamtrust, Johannesburg.

12522/79—BRAMLEY, Willem, 5704145004000, Berdykwoonstelle 12, Carletonville; Adelana Bramley, 600490066006 (Oberholzer).—Santamtrust, Johannesburg.

13156/79—VENTER, Abraham Wilhelm, 211097308W, Stephensongebou 9, Finsteinstraat, Vanderbijlpark (Vanderbijlpark).—Santamtrust, Johannesburg.

847/80—JANSEN VAN VUUREN, Hendricka Gesina, 2212120052005, Campbellhof 103, Klerksdorp (Klerksdorp).—Santamtrust, Johannesburg.

2080/80—BOTHMA, Jacobus Johannes, 2811125037000, Reygerstraat 36, Auellerie Park, Krugersdorp; Susanna Helena Elizabeth Botha (Krugersdorp).—Santamtrust, Johannesburg.

8150/80—FANDAM, Harry George, 0603085014000, 209 Kirstenbosch, Dundalk Avenue, Parkview, Johannesburg; Evelyn Victoria Fandam, 1104220016009 (Johannesburg).—Standardtrust, Johannesburg.

7833/80—FUNCK, Henry Alfred, 9410035007006, 307 Yvonne Court, First Avenue, Springs; Eleanor Jane Funck, 9410035007006 (Springs).—Standardtrust, Johannesburg.

7520/80—CRAIG, Beatrice, 0909180043004, 3 Devon Court, 53 Somerset Road, Mayfair; Arthur Hendry Craig (Johannesburg).—Standardtrust, Johannesburg.

2077/80—BAUM, Harry Edward, 10061050481009, 114 Lena Street, Linmeyer, Johannesburg (Johannesburg).—Standardtrust, Johannesburg.

4677/80—WALLACE, James Ian, 1008155057005, 14 Gerrie Rudlof Street, Duvha Park, Witbank.—Standardtrust, Johannesburg.

8491/79—BEHRENS, Johanna Helena Daisy, 1510090036 002, 401 Yvonne Court, First Avenue, Springs (Springs).—Barclays National Bank, Johannesburg.

6596/80—CLOETE, Eletta Maria, 1307210020002, 208 Barbara Road, Elandsfontein (Germiston).—Barclays National Bank, Johannesburg.

1920/80—MITCHELL, Brian Edward, 1612085015007, 13 Moon Street, Fishershill, Germiston; Joyce Kathleen Mitchel, 2412040033008 (Germiston).—Barclays National Bank, Johannesburg.

6173/80—GRANT, Jane Elizabeth, 0102270008000, 11 Monterey, 25 Harley Street, Yeoville, Johannesburg (Johannesburg).—Barclays National Bank, Johannesburg.

8694/80—STEWART, Dorothea Christina, 8807280003005, Ons Tuis, 1 Observatory Avenue, Observatory, Johannesburg (Johannesburg).—Barclays National Bank, Johannesburg.

9367/79—SMITH, Elizabeth Catherina Louisa, 0303210004 006, 33 Pine Avenue, Primrose, Germiston (Germiston).—Barclays National Bank, Johannesburg.

8303/79—BROWN, Martin Walter Holland, 3202075054 105, 19 Woodridge, Rivonia Road, Morningside, Johannesburg (Randburg and Durban).—Barclays National Bank, Johannesburg.

959/80—JOHNSON, Carl Johan Victor, 2007235019000, Fletnerstraat 011, Mindalore, Krugersdorp; Martha Jacoba Johnson, gebore Ueckermann, voorheen Botes, 2702040030 008 (Krugersdorp).—Barclays-Nasionale Bank, Johannesburg.

1580/80—VAN DER WATH, Cornelius, 2609185032008, Kliprivierrylaan 33, Three Rivers, Vereeniging; Maria Elizabeth Cathrina van der Wath, gebore Nel, voorheen Steynberg, 1610030040005 (Vereeniging).—Barclays-Nasionale Bank, Johannesburg.

8986/78—PROUDFOOT, Adeline Mary, 9301170004009, 3 Rose Road, Houghton, Johannesburg, Second and Final Liquidation and Distribution (Johannesburg).—C. J. Ross-Spencer, Johannesburg.

2030/79—MORRIS, John, 966070653, 8 Jasmine Street, Florida Park; Melody Monica Morris (Roodepoort).—Mrs M. M. Morris, Florida Park.

8935/79—BLUE, Archibald, 1207255037004, 9 Rossway, 7 Saratoga Avenue, Berea, Johannesburg; June Valerie Blue (Johannesburg).—Stanley S. Kalinko & Company, Johannesburg.

6238/79—ISAACS, Moss, 0205075009006, 303 Killarney Wilds, Seventh Street, Killarney, Supplementary First and Final Liquidation and Distribution (Johannesburg).—Gaddie Brothers & Partners, Johannesburg.

5672/79—WALDRON, David Maurice, 2309105038007, 6 Kent Road, Bryanston (Johannesburg).—E. N. Waldron, Bryanston.

3234/80—STABLEFORD, Alice Rachel Sidney, 101012003 7005, 203 Minarto Court, 60b Grant Avenue, Norwood, Johannesburg (Johannesburg).—Van Hulsteyn Duthie & Saner, Johannesburg.

NATAL

By die kantoor van die Meester, PIETERMARITZBURG, en ook van die landdros van die distrik wanneer dit tussen haakies geneld word.

At the office of the Master, PIETERMARITZBURG, and also of the magistrate of the district when stated in parentheses.

1905/80—GOLDHAWK, Arthur McAlphine, 0711225033 002, 84 Lagoon Drive, Umhlanga Rocks (Verulam).—Standardtrust, Durban.

699/76—DEYZEL, Maria Dorothea Elizabeth, gebore Deysel, 278086016W, Mt Ngwibi, Verbeterde Eerste en Finale; Nicolaas Johannes Jacobus Deyzel, 2210045044008 (Vryheid).—Hannah Schoombee & Steyn, Vryheid

3130/80—AIRD, Ralph Thompson, 0707055022008, 11 Thurlmere, 82 Cato Road, Glenwood, Durban (Durban).

1777/80—WILSON, Cedric Ferguson, 9710105014000, St Andrews Hotel, Umkomaas (Scottburgh).—Barclays National Bank, Durban.

332/80—BOTHA, Cornelius Johannes, 356132253, 1507 Kings Hall, Aliwal Street, Durban (Durban).—Britz & Bonamour, Durban.

1767/80—PHILLIPS, Hilda May, The Cottage, Wayside, Little Baddow, Essex, England.—Chapman Dyer Incorporated, Durban.

1419/80—NEL, Mauritius Guillame, 0806185018009, 68 Montpelier Road, Durban (Durban).—Durban Board of Executors and Trust Co., Durban.

3146/69/2—VAN ROOYEN, Richard Leonard, District of Mount Ayliff, Amended First and Final (Durban).—Downes McKenzie Sullivan & Clulow, Durban.

2363/80—PATHER, Cooposamy Moothosamy, 800303064A, 18 Jawhar Place, Merebank, Durban; Vedanayagee Pather, 800231341 (Durban).—Ditz Incorporated, Durban.

2038/80—KESHAV, Morar, 1705085040056, Flat 13, Mount Everest, 126 Prince Edward Street, Durban (Durban).—T. C. Mehta & Company, Durban.

3699/74—KAGAMA, 800477449, 39 Foreman Road, Sydenham, Durban, Amended (Durban).—T. C. Mehta & Company, Durban.

2423/80—DHURGAPERSAD, 800451926A, House 22, Road 621, Chatsworth, Durban; Dasomathi Dnurgapersad, 800088 132A (Chatsworth).—J. C. Mason & Co., Durban.

4305/75—WAGENVOORDE, Frederik Antoni, 290218502 9100, Gillitts, Amended; Monica Ruth Graham, formerly Wagenvoorde (Pinetown).—Lester Hall Ewing & Swan, Hillcrest.

2231/80—WRIGHT, Mabel, 9805310005007, spinster, 95 The Grove, Victoria Embankment, Durban (Durban).—D. B. Lyle Kearney & Swart, Durban.

4039/77—McCOLL, Clara Ethel, 211447865W, 380 Moore Road, Durban (Durban).—Leandy & Partners, Durban.

327/80—HARDEO, 800449146A, 41 Road 726, Montford, Chatsworth; Amarayi (Chatsworth).—Marcus Lewis Robinson & Goulding, Durban.

2626/76—WORTHINGTON, Trevor, 211460160, 23 Gordon Road, Pinetown, Second Amended and Final (Durban).—Meskin & Levy, Durban.

5313/76—DESAI, Adam Ismail, 800370144A, I. H. Desai (Pty) Ltd, Mooi River, Amended First and Final (Mooi River).—A. N. Munro & Partners, Durban.

744/80—FORREST, Evelyn May, 0512110011107, 10 Newfield Street, Sandbach, Cheshire England (Port Shepstone).—Barclays National Bank, Durban.

1912/80—RUDOLPH, Wilfrid Arvid, 0912115026003, Renishaw Retirement Village, South Coast (Scottburgh).—Barclays National Bank, Durban.

2610/80—MAYS, Herbert Alexander, 3210055028007, Cheshire Avene, Cowie's Hill, Pinetown (Pinetown).—Barclays National Bank, Durban.

3504/80—ATKINSON, Sarah, 9701170005007, 12 Elm Road, Highland Hills, Pinetown (Pinetown).—Barclays National Bank, Durban.

2650/80—WOTHERSPOON, Kennith Noel, 3508065016007, P.O. Box 93, Hlobane; Johanna Magdalena Wotherspoon, 2606190018004 (Vryheid).—Santamtrust, Durban.

711/80—URBASCH, Carl Rudolf, 2812305042109, 90 Wylie Road, Bluff, Durban (Durban).—Santamtrust, Durban.

2597/80—RETIEF, Archibald Frank, 3206095002002, 2 Tellicoe Street, Pinetown; Elizabeth Magrietha Retief, 381006 0054003 (Pinetown).—Santamtrust, Durban.

3381/80—NEL, Pieter Willem Adriaan, 4808135062000, 10 Holmes Avenue, Glencoe; Anna Catharina Magrietha Nel (Glencoe).—Santamtrust, Durban.

2850/80—PARSONAGE, Victor, 3112135047009, 7 Walkers Lane, Greyville, Durban; Johanna Elizabeth Kathleen Parsonage, born Kloke, 064353660 (Durban).—Santamtrust, Durban.

3814/80—VENTER, Gabriel Daniël Jacobus, 0811255011 009, 21 Aylesford Road, Stanger; Helena Cecilia Venter, born Houston McMillan, 1603290016005 (Stanger).—Santamtrust, Durban.

2036/80—JOHNSON, Charles, 3412085071003, 644 Stella Road, Escombe, Durban; Clarice Maureen Johnson, 340217 0056001 (Durban).—Santamtrust, Durban.

1955/80—PILLAY, Gonaseelan, 800464018A, Road 721, House 95, Chatsworth; Sarojini (Pinetown).—Durban.

6056/79—MISSRA, Raghunath (Raghunath Lowton), 311 0205046059, 190/194 Silver Glen Drive, Silver Glen, Durban; Sushila Surridhine, 3210140011059 (Chatsworth).—J. Kissoon Singh & Co., Durban.

921/80—BECHOO, 800443384, 19 Crown Road, Kenville, Durban (Durban).—J. Kissoon Singh & Co., Durban.

2756/79—NAICKER, Arumogam, 3809125059056, Umkomaas, South Coast (Scottburgh).—S. R. Wakely & Smith, Scottburgh.

3237/79—FAKROODEEN, Kulsum Bibi, 800465706, Flat 12, Sayed's Court, 78 Prince Edward Street, Durban (Durban).—Farouk Vahed & Company, Durban.

3847/79—GARIB (Garbo), Ramnarayan, 2910315063055, Knoxgore Road, St Michaels on Sea, South Coast; Rookmin Ramnarayan, 3602180060055.—Farouk Vahed & Co., Durban.

2693/80—HANNABUS, Thomas, 0207205012009, 6 Cottingham, 16 Noble Road, Berea, Durban (Durban).—Santamtrust, Durban.

974/80—WALLER, Isabel Florence, 278086165W, Glenwood Nursing Home, 23 Manning Road, Durban (Durban).—Santamtrust, Durban.

2111/80/1C—SCHUURMAN, Louis de Wet, 9908275007 008, 3 Heath Glen, 262 Vause Road, Durban (Durban).—W. B. Thomas & Co., Durban.

545/80—BAKER, Michael George, 4606075049007, 32 Rosythe Road, Sea View, Durban; Yvonne Kathleen Baker, 531 2020053009 (Durban).—Syfrets Trust, Durban.

1461/80—DAVIDSON, Kathleen, 1407040003002, Canongate Court, Berea Road, Durban (Durban).—Syfrets Trust, Durban.

240/76—JACKSON, Valerie Mary, 211508968, 10 Barton Road, Cambridge, England, Supplementary First and Final (Durban).—Syfrets Trust, Durban.

1719/80—READE, Charles, 085115011001, 9 Abingdon Road, Umbilo, Durban (Durban).—Syfrets Trust, Durban.

1197/80—LARSON, Dolly Kathleen, 9707180014004, Bill Buchanan Park, Goodwin Drive, Durban (Durban).—Syfrets Trust, Durban.

1405/80—MYBURGH, Corne Susanne, 4807170069003, 53 Alde Gardens, Egerton Road, Ladysmith (Ladysmith).—Santamtrust, Durban.

1929/80—NEL, Samuel Jacobus, 1505266054004, 32 Third Avenue, Ashley, Pinetown; Susan Elizabeth Meyer, born Ehlers, 2403260019009 (Pinetown).—Santamtrust, Durban.

2601/80—HEASLEY, Denis Bishop, 1503165041007, 5 Carissa Court, 40 Walton Place, Durban; Esme Olive Heasley, born Schmidt, 2405050043008 (Durban).—Santamtrust, Durban.

1638/80—VAN DER MERWE, George Hendrik Fredrik (Frederik), 0912025027000, 43 Winston Road, Pietermaritzburg; Kathleen van der Merwe, 1209200034003.—Santamtrust, Durban.

2546/80—NEL, Louis Jacobus, 4005275039001, 26 Raymond Drive, Pietermaritzburg; Priscilla Louisa Nel, 4410190033008, Santamtrust, Durban.

1035/79—SCHOFIELD, Dorothy Dale, 022322932, Hibiscus House, Village of Happiness, Margate (Port Shepstone).—Pat Poovalingam & Company, Durban.

5474/79—CRAFFORD, Neill MacWilliam, 4702125015005, 403 Innes Road, Durban, Second Liquidation and Distribution (Durban).—Standardtrust, Durban.

820/80—CARY, Marion Joyce, 211717004, 11 Broadwindsor Court, Broad Street, Duban (Durban).—Standardtrust, Durban.

3592/79—MILLER, Ronald Stanly (Stanley), 0305105008 000, 33 Kingston Drive, Umhlanga Rocks (Verulam).—Standardtrust, Durban.

2613/79—DELFERIERE, Firmin Leon Marie Ghislain, 420 7165110104, 51 Dunkeld Road, Westville; Jesette Amelie Ghislaine Delferiere, 968021876 (Pinetown).—Standardtrust, Durban.

2623/80—ANDERSON, May, 445573924W, Glamis Nursing Home, Essenwood Road, Durban (Durban).—Standardtrust, Durban.

3257/80—HALL, John Edward, 0308195009003, 4 Merrivale, Roledo Avenue, Durban (Durban).—Standardtrust, Durban.

2449/79—SILVERMAN, Ralph Norman, 2309165043004, St Michael's on Sea, South Coast (Port Shepstone).—Standardtrust, Durban.

2955/80—FERREIRA, Sybil Elouise, 961126002006, Natal Settlers Home, Durban (Durban).—Standardtrust, Durban.

180/80—DE BRUYN, Johannes Petrus Mathews, 12010650 10004, 414 Arnleigh, Esplanade, Durban (Durban).—Security Executor and Trust Company, Durban.

1080/80—BANNON, Blanche Alice, 0009250001006, Sunnyside Park Home, Sweetwaters Road, Pietermaritzburg; John Denton Bannon.—Graham Harrison & Company, Pietermaritzburg.

2353/80—DOUGLAS, Phoebe, 245013765, Sunnyside Nursing Home, Pietermaritzburg.—Brokensha, McLaren & Meyer, Pietermaritzburg.

840/79—RAMGARIB, Bridge Moham, 2910285075055, 33 Durban Street, Greytown; Kiclass Mohan (Greytown).—Van Rooyen & Forder, Greytown.

1277/79—PADAYACHEE (Munsamy), Munsami, Subramani, 3611105061056, 86 Rocky Mountain Drive, Shallcross; Muniamma Padayachee (Pinetown).—Macrea Bath & Partners, Pinetown.

2440/79—NELL, Margaret Isobel, 1002040005006, 29 Harding Street, Newcastle (Newcastle).—Barclays National Bank, Pietermaritzburg.

2134/80—MUNRO, Douglas Sutton, 1901035022001, House 3, Railway Road, Ixopo; Francina Johanna Munro (Ixopo).—Barclays National Bank, Pietermaritzburg.

491/80—VAN ROOYEN, Lukas Marthinus, 98 Afrikaner Street, Vryheid; Catharine Johanna van Rooyen (Vryheid).—Barclays National Bank, Pietermaritzburg.

4354/79—JULY, William Albert, 3608275033014, 14 Main Street, Kokstad (Kokstad).—Barclays National Bank, Pietermaritzburg.

4079/79—VAN DER MERWE, Daniel Petrus, 17092650 3000, 18 Mark Street, Utrecht, Supplementary (Utrecht).—Barclays National Bank, Pietermaritzburg.

3323/80/2—KLOPPER, Johannes Petrus, 0805295005005, 106 Ansonia Court, Loop Street, Pietermaritzburg; Mary Jean Klopper, born Heathcote, 0705160009001.—Barclays National Bank, Pietermaritzburg.

4912/79—REDINGER, Friedrich Chrisian Albert, 96090 35005007, Ekamanzi Road, Dalton; Anna Emma Martha Redinger (Dalton).—Barclays National Bank, Pietermaritzburg.

3987/80—SCHUBACH, Olive Joan, 226008397, 14 Gough Road, Townhill, Pietermaritzburg, 30 days.—Barclays National Bank, Pietermaritzburg.

3477/80—MEISTER, Elisabeth Eva Emma Marie, 08090 20025007, Caistersingel 7, Berea, Durban (Durban).—Volkskas, Pietermaritzburg.

730/70—ISMAIL, Ebrahim, 800464722, Albersville, Port Shepstone, Supplementary (Port Shepstone).—Rajah, Pillay & Company, Port Shepstone.

2731/72/1—BALCON, Frederick Ernest, 958071823, 26 Richmond Park, Kloof, Supplementary Liquidation and Distribution Account (Durban).—Shepstone & Wylie, Durban.

1488/80—HACK, Abdul, 800344951A, House 264, Road 706, Chatsworth, Durban; Ameenabibi, 800344965A (Durban).—Legator McKenna Incorporated, Durban.

5545/79—CALPIN, Christian Dorothy Marguerite, 010705 0013005, Riviera Hotel, Victoria Embankment, Durban (Durban).—Forsyth & Nel, Durban.

6040/79—NARAINSAMY, 800470268, 15 Road 209, Chatsworth; Suramah, 800388885A (Pinetown).—Moolla & Singh, Chatsworth.

4559/79—KADER, Abdul, 800430992A, 86 Road 615, Chatsworth, Durban, Amended (Pinetown).—Moolla & Singh, Chatsworth.

1441/80—TRIGG, Evelyn Mary Louise, 211767552, Natal Settlers' Memorial Homes, Hutchinson Road, Durban (Durban).—Shepstone & Wylie, Durban.

5206/79—OSMAN, Aboobaker Omar, 800468083A, House 33, Road 320, Chatsworth; Ameerun, 800450705A (Durban).—Yunus Mahomed & Associates, Durban.

1798/80—RAMPARSAD, Roopnarain, 800487664A, 53 29th Avenue, Umhlatuzana Township, Durban; Suechitue, 800462 408A (Chatsworth).—B. R. Mahabeer & Company, Chatsalen.

1934/80—OLZEN, Eric William, 9109045003001, 713 Stella Road, Escombe; Gladys Maud Olzen, 9710010013006 (Durban).—Barclays National Bank, Durban.

91/80—FRANKLIN, Arthur Howard, 0109045013009, 6 Royan Place, La Lucia (Verulam).—Morris Brothers, Durban North.

3667/79—RUGHUMUNAN, Ramnarain (Romnarain), 800 304467, 27 Booth Avenue, Sydenham, Durban; Rajpathi Faltian, 800231428A (Durban).—Choonilal, Jayrajh & Partners, Durban.

3330/79—WOOD, Eva Doris, 0009290009001, 74 Glenashley Heights, 102 Newport Avenue, Glenashley, Durban (Durban).—Barclays National Bank, Durban.

1913/80—SCOTT, Mary, 2105200324003, 19 Gainsford Place, La Lucia (Durban).—Barclays National Bank, Durban.

2266/79—GOVINDASAMY, 800305309, Inanda, Verulam, First; Kistamma (Verulam, Inanda).—B. Sing & Co., Verulam.

1621/80/1D—CLARK, Wilfred Sanders, 1212195027008, Durban (Durban).—Standardtrust, Durban.

1330/80—WILSON, Annie Rutherford, 900715004006, Morningside Nursing Home, Innes Road, Durban (Durban).—Standardtrust, Durban.

ORANJE-VRYSTAAT • ORANGE FREE STATE

By die kantoor van die Meester, BLOEMFONTEIN, en ook van die landdros van die distrik wanneer dit tussen hakies gemeld word.

At the office of the Master, BLOEMFONTEIN, and also of the magistrate of the district when stated in parentheses.

86/80—VAN DER MERWE, Sophia Jacomina, 9007270001 007, Moolhawe-ouetehuis, Bloemfontein.—Van der Merwe & Sorour, Bloemfontein.

1044/80—VAN ASWEGEN, Margarethe Aletta, gebore Van Aswegen, 2807120008004, Blaauwfontein, Pk. Dealesville (Dealesville).—E. G. Cooper & Seuns, Bloemfontein.

2384/79—ERASMUS, Pieter, 4201175028000, Williamstraat 12, Doorn, Welkom; Sarah Frances Erasmus, gebore Van der Westhuizen, 4411070022004 (Welkom).—Santamtrust, Bloemfontein.

1852/79—SCHIMPER, Petrus Hendrik van Rooyen, 16110 35018004, Kerkstraat 19, Marquard (Marquard).—Victor Kotze & Smit, Winburg.

2198/79—ELLIS, Pieter Johannes, 1912295019009, Symondstraat 33, Kroonstad, Eerste en Finale Likwidasie, Distribusie en Herverdelings (Kroonstad).—Santamtrust, Bloemfontein.

2350/78—HAMMANN, Johannes Jacobus Jurgens, 020407 5004000, Bettiesrus, Petrus Steyn; Anna Cornelia Hammann, gebore Möhr, 1008110220003 (Petrus Steyn).—Willem du Toit & Vennote, Sunnyside.

791/80—DE VILLIERS, Albertina, 0605040008001, 7 Chris Botha Street, Westdene, Bloemfontein.—McIntyre & Van der Post, Bloemfontein.

596/80—McQUEEN, Neil Jameson, 0710245008002, Louisvale, distrik Ladybrand; Anna Sophia McQueen, gebore Labuschagne, 1102260006005 (Ladybrand).—L. du Preez & Kie., Ladybrand.

266/80—ROSS, James Levi Goss, 0105125010006, Laboriawoonstelle 106, Stuartstraat, Harrismith (Harrismith).—Cloete & Neveling, Harrismith.

2206/78—VAN NIEKERK, Anna Margaretha, gebore Lourens, 8903010001003, Buitekantstraat 32, Reitz (Reitz).—Naude & Van de Wall, Bloemfontein.

940/80—BRITTON, Allen Handforth, 0711045021005, 7 Haarburger Crescent, Bloemfontein.—Harold de Banastre Hopkinson, Bloemfontein.

1065/77—LE KOCH, Solly Maurice, 1001255021005, Oxfordwoonstelle 1, Bethlehem, Supplementêre (Bethlehem).—Meyerowitz & Moore Ingelyf, Bethlehem.

1360/80—BEYERS, Anna Johanna, 452404916W, Eikelaan 7, Reitz (Reitz).—Barclays-Nasionale Bank, Bloemfontein.

1273/80—DICKSON, James, 150275021000, 60 Church Street, Doorn, Welkom; Phyllis Ada Rosetta Dickson, 200301 0024000 (Welkom).—Barclays National Bank, Bloemfontein.

974/79—PATTINSON, Winifred Graham, born Southey, 061018002004, Harrismith, First Supplementary (Harrismith).—Barclays National Bank, Bloemfontein.

646/80—BUBB, Catrina Christina, 2008270010003, Welkom (Welkom).—Barclays National Bank, Bloemfontein.

451/80—VAN DEVENTER, Johanna Susanna, voorheen Van der Schyff, gebore Vermaak, 0609240035004, Bakenkop, Vredefort (Vredefort).—Barclays-Nasionale Bank, Bloemfontein.

1348/80—ASHPOLE, Sophia Elizabeth, 25P6270002003, Stanleystraat, Koffiefontein (Koffiefontein).—Barclays-Nasionale Bank, Bloemfontein.

1380—MARAIS, Andries Francois, 0910025006008, Langzeekoegat, Trompsburg en Andriesstraat 21, Trompsburg; Hester Helena Susara Marais, gebore Venter, 1505100027009 (Trompsburg).—Barclays-Nasionale Bank, Bloemfontein.

1401/80—CRONJE, Susanna Aletta, gebore Maree, 041029 0006007, Vanriebeeckstraat 52, Theunissen (Theunissen).—Barclays-Nasionale Bank, Bloemfontein.

598/80—SPANGENBERG, Heila Maria, voorheen Ersking, gebore Barkhuizen, 0708280021005, Generaal Dewetstraat 21, Fauresmith (Fauresmith).—Barclays-Nasionale Bank, Bloemfontein.

1345/80—WOOD, Thomas Henry (Hendry), 0012025009007, 2 Stirling Court, Andries Pretorius Street, Bloemfontein.—Barclays National Bank, Bloemfontein.

531/80—JORDAAN, Adriaan van der Byl, 2605235025 006, Flaneganstraat 4, Thaba Nchu; Martha Alma Jordaan, 3308220034007 (Excelsior).—Barclays-Nasionale Bank, Bloemfontein.

2292/79—ANDERSON, Mary Elizabeth, 141266702W, House of St Paul, Reitz, First Supplementary (Reitz).—Barclays National Bank, Bloemfontein.

1462/80—STEENKAMP, Susara Christina, gebore Botha, 0801210033008, Rietpoort, Parys; Pieter Stephanus Steenkamp, 0305215022008 (Parys).—Barclays-Nasionale Bank, Bloemfontein.

379/80—BOTHA, Gerrit Thomas, 6108175059000, Groenpunt Gevangenis, oor Vereeniging (Meyerton).—J. J. Botha, Meyerton.

1840/79—MYBURGH, Albertus Wilhelmus Phillipus Johannes, 1811075011006, Maritzstraat 13, Sasolburg, Tweede; Jeanetta Johanna Catharina Myburgh, gebore Delport, 21032 90033000 (Sasolburg).—Volkskas, Bloemfontein.

139/80—DU TOIT, Magdalena Maria, gebore Pietersen, 1003160020007, Paardekraal, Pk Steunmekaar, oor Bloemfontein (Fauresmith).—Ross & Ceronio, Jagersfontein.

956/76—VAN DER MERWE, Philippus Arnoldus, 050211 5010006, Kroondal, Pk. Kransfontein, distrik Bethlehem, Verbeterde Eerste en Finale (Bethlehem).—P. A. Grobler, Bethlehem.

140/80—JANSE VAN RENSBURG, Anna Catharina, 030 9130014009, Fanahof 10, Mollstraat, Kroonstad (Kroonstad).—Richter, Els & Pienaar, Viljoenskroon.

1448/79—VAN SANDWYK, Willem, 101216, Gilbert Farm, Harrismith, Verbeterde (Harrismith).—Cloete & Neveling, Harrismith.

1783/79—BOSHOFF, Margaretha Christina, gebore Van Wyk, 01120100010000, Heranohof 6, Harrismith (Harrismith) —Cloete & Neveling, Harrismith.

1543/79—VAN DER WESTHUIZEN, Nicolaas Johannes, 0209135008008, wewenaar, Vangraanstraat 7, Aandrus, Bloemfontein.—Santamtrust, Bloemfontein.

2412/79—VAN DER WESTHUIZEN, Hendrik Johannes, 1908275018003, Genl. Cronjestraat 39, Bloemfontein.—Naude & Van de Wall, Bloemfontein.

187/80—KLEINHANS, Anna Susanna, 2307210044001, Noorderstraat 30, Parys (Parys).—Volkskas, Klerksdorp.

86/80—COOKE, Michael, 2608235028006, Lot 90 Kvalsvig Road, Oslo Beach, District of Port Shepstone (Port Shepstone).—Franz, Redpath & Barry, Port Shepstone.

859/80—SIMPKINS, Myra Beatrice, 3005010031009, 2 Lala Road, Oslo Beach; Gordon (George) Alexander Simpkins, 2609185011000 (Port Shepstone).—Franz, Redpath & Barry, Port Shepstone.

2044/80—QUICKE, Maude Elliott, 9404140008009, N.C.V.V. Home, 400 Prince Alfred Street, Pietermaritzburg.—Venn Nemeth & Hart, Pietermaritzburg.

861/80—KRIEL, Sophia Adriaana, 24503888, 58 Topham Road, Pietermaritzburg; Nicholas Johannes Kriel, 260212503 4000.—Errol W. Stowell & Co., Pietermaritzburg.

5221/79—JESSOP, Cecil Edward, 0402235005004, 114 Hawthorn Street, Kokstad (Kokstad).—John C. Blakeway & Leppan Inc., Umtata.

6012/79—LAMPARD, John Victor, 0510175037009, The Aloes, Colenso (Colenso).—Christopher Walton & Tatham, Ladysmith.

4397/78—POTGIETER, James, 3910165039006, Maroela Moot 40, Arboretum, Richardsbaai, Supplementêre; Arthur Josefina Potgieter, gebore Opperman, 144335383 (Empangeni).—Die Sentrale Eksekuteurskamer, Pretoria.

1371/80—BAKEBERG, Heinrich Friedrich Wilhelm, 990 7165004000, Shelly Beach (Port Shepstone).—S. O. Basson & Co., Port Shepstone.

375/80—RAJKUMAR, Kisham, 2405045047056, 15 Helston Road, Allandale, Pietermaritzburg; Kalaspathy.—J. Leslie Smith & Company, Pietermaritzburg.

1155/80—PILLAY, Thayanaiagee, 0611290020050, 121 Allandale Drive, Pietermaritzburg.—Errol W Stowell & Company, Pietermaritzburg.

G138/79—SCHEEPERS, Pieter Jacobus, 3404145029006, Loerieweg 15, Chasedene, Pietermaritzburg; Johanna Cortina Scheepers.—Boland Bank, Pietermaritzburg.

2877/80—LE GRANGE, Maria Katrina Susanna, 090619 0005007, Ouwklip, distrik Dundee; Louis Francois le Grange, 0901035004000 (Dundee).—Volkskas, Pietermaritzburg.

159/80—PULLEN, John Thompson, 8208095002003, Northway 133, Durban-Noord (Durban).—Volkskas, Pietermaritzburg.

453/80—MYBURGH, John William, 2502025058002, Fort Drury, St Andrew Street, Bloemfontein.—Standardtrust, Bloemfontein.

1167/80—DEACON, Maria Magdalena, 8510210002002, Mooihaweouetehuis, Mellvillerylaan, Bloemfontein (Brandfort).—Standardtrust, Bloemfontein.

1028/80—LATEGAN, Gert Christiaan Johannes, 08073050 01008, Koppies (Koppies).—Standardtrust, Bloemfontein.

600/80—BORNMAN, Christoffel Johannes Petrus, 141203 5013008, Buitenstraat 27, Villiers; Jacqueline Suzette Bornman (Villiers).—Santamtrust, Durban.

NOORD-KAAP • NORTHERN CAPE

By die kantoor van die Meester, KIMBERLEY, en ook van die landdros van die distrik wanneer dit tussen hakies gemeld word.

At the office of the Master, KIMBERLEY, and also of the magistrate of the district when stated in parentheses.

539/80—GRESSE, Maria Magritha, 044087135W, Frank du Toitouetehuis, Kerkpleia, Prieska (Prieska.—Standardtrust, Kimberley.

208/80—JOBSON, Ruth Bacon, Fort England Hospital, Grahamstown (Grahamstown).—Standardtrust, Kimberley.

1097/79—MARITZ, Allan Mark, 5310125150001, p/a N. J. Heynskool Hostel, Kimberley.—Elliott, Maris, Wilmans & Hay, Kimberley.

1032/79—MITTON, Sarah Johanna Jacoba, 9312250009008, Ouetehuis, Kuruman (Kuruman).—J. S. Mitton, Britstown.

441/79—CLOETE, Gert Jacobus, 9907285006000, Campbellstraat, Campbell, Gewysigde Eerste en Finale; Maria Magrietha Cloete, 0602010003005 (Douglas).—Santamtrust, Bloemfontein.

153/80—KOTZE, Leon Jacobus, 5810125094000, Copperton, Prieska (Prieska).—Petrus J. Muller & Kie., Prieska.

467/80—HERBST, Helena Jacoba Hendrika, gebore Pretorius, 141265334W, Stellastraat 128, Vryburg (Vryburg).—Frylinck & Walker, Vryburg.

517/80—GOUWS, Catharina Susanna, 0610030002006, Swansweg 51, Kimberley.—Elliott, Maris, Wilmans & Hay, Kimberley.

836/79—VAN ASWEGEN, Andries Albertus, 1009275033 009, Stellastraat 177, Vryburg; Hendrina Gertruida van Aswegen, 1908250059006 (Vryburg).—Die Sentrale Eksekuteurskamer, Pretoria.

314/80—MEADES, Daniel Rudolph, 2107265016007, Bartleplek 43, Beaconsfield, Kimberley.—Elliott Maris Wilmans & Hay, Kimberley.

155/80—BURGER, Louis Le Roux, 5908235029005, De Klerkstasie, Richmond (Richmond).—Elliott Maris Wilmans & Hay, Kimberley.

304/80—ESTERHUIZEN, Hilda Johanna, gebore Lotriet, 9205260002007, Schröder, Kakamas (Upington).—Malan & Vennote, Upington.

1108/79—ZAAL, Paul (Paulus) (Paul Hendrik), 007782678 K, Huis 54, Kleurlingwoongebied, Copperton; Mietjie Zaal, gebore Wylbach, 4901160089012 (Prieska).—Van Niekerk & Groenewoud, Prieska.

196/80—JACOBS, Johanna Dorothea, gebore Joubert, 9912 130011007, Emaraldstraat 16, Lime Acres (Postmasburg).—Volkskas, Kimberley.

344/79—LEWIS, Johannes Martinus, 3508065009002, Perseel 5 J 11, Hartswater; Teashia Lewis, 4006270061008, Volkskas, Kimberley.

757/79—PAIN, Berand Johannes, 5705125082007, 19 Moor Road, Kimberley.—Magnus Macleod & Company, Kimberley.

246/80—AGENBAG, Susanna Cornelia Petronella, gebore Els, 0610310004003, Rietfontein, Pk. Lohatlha; Jan Abraham Agenbag, 100525501900 (Postmasburg).—Volkskas, Kimberley.

302/80—VAN WYK, Henning Jacobus, 1711125005000, Opdamkolk, Kenhardt; Magrietha Aletta van Wyk, 2507300021 005 (Kakamas).—Volkskas, Kimberley.

493/80—GREENAN, William Wallace, 2312045025001, Werkstraat 32, Ulco; Susanna Gertruida Greenan (Barkly-Wes).—H. A. Greenan, Carters Glen.

OOS-KAAP • EASTERN CAPE

By die kantoor van die Meester, GRAHAMSTAD, en ook van die landdros van die distrik wanneer dit tussen hakies gemeld word.

At the office of the Master, GRAHAMSTOWN, and also of the magistrate of the district when stated in parentheses.

1695/80—ROBARTS, Johannes Stephanus, 1003215002000, 87 Kirkwood Street, Port Elizabeth; Muriel Blanche Robarts, born Allan (Port Elizabeth).—Brown & Braude, Port Elizabeth.

991/78/1—BOTHA, Thinus, 006119096, Springbokstraat 7, Kroonvale, Graaff-Reinet, Gewysigde Eerste en Finale (Graaff-Reinet).—C. H. Maasdorp & Smit, Graaff-Reinet.

90/80—PIETERSEN, Rowland (Rownald), 2912095060004, 6 Spring Street, Grahamstown; Phyllis Yvonne Clark Pietersen (Black), 003923676.—W. J. Olckers & Son, Grahamstown.

628/80/2C—KALMANE, Babalaza, 12892221, Mountain Top, Cathcart; Noampulu Elsie Kalmane, born Nomogelashe (Cathcart).—Elliott Brothers, Cathcart.

1425/80—RUDIGER, Susan Hareen, 1310170033007, H1 Buffelsfontein Centre, 17th Avenue, Walmer, Port Elizabeth; Rudolf Wilhelm Rudiger, 1310265043002 (Port Elizabeth).—Syfrets Trust, Port Elizabeth.

1132/80—GUNN, George Gibson, 0607025004005, 4 Mimosa, St Patrick's Road, Belgravia, East London (East London).—Syfrets Trust, East London.

426/79/2—HAYWARD, Eitel Almero John, 18095014004, Oorlogspoort, Aberdeen, Supplementary (Aberdeen).—Syfrets Trust, Graaff-Reinet.

1340/80—HOBSON, Margaret Edith Breakey, 001903227W, Red Cross Home, Graaff-Reinet (Graaff-Reinet).—Syfrets Trust, Graaff-Reinet.

653/80—NELL, Marthinus Corneluis Stephanus, 2109285 004005, Derde Straat 1, Uitenhage; Alice Magdalena Nell, 2209100003006 (Uitenhage).—Santamtrust, Port Elizabeth.

2929/78—DIPPENAAR, Schalk Willem, 1703015006008, Curriestraat 12, Levyvale, Uitenhage, Aanvullende Tweede en Finale Likwidasie en Distribusie; Maria Magdaleen Dippenaar, gebore Ehlers, 1707220004005 (Uitenhage).—Standardtrust, Port Elizabeth.

605/80—NEWNAM, Cecil Sidney Bailey, 0608265023002, divorcee, 11 Folen Court, Elton Street, East London (East London).—J. A. Yazbek & Co., East London.

3243/79—GREEN, Eric Leslie, 2211215018004, 27 Steyn Avenue, Rosemount, East London; Patricia Cornelia Green, born Niekerk, 2810050033000 (East London).—J. A. Yazbek & Co., East London.

1143/80—SMITH, Cecil Graham, 0902165001006, 14 Raleigh Street, Central, Port Elizabeth; Ruby Doris Smith, born Fry, 0703110030003 (Port Elizabeth).—Barclays National Bank, Port Elizabeth.

907/80—PARKER, Annie Catherine, 0101160003006, De Hoop, Hofmeyr (Hofmeyr).—Standardtrust, East London.

1212/80—JORDAAN, Johanna Jacoba, gebore Coetzee, 116 341766K, Hartstraat 2 (Somerset-Oos).—Abrahamson & Reynolds, Somerset-Oos.

1667/80—GREGG, Wilfred, 8912215002005, 3 Elizabeth Court, Inverleith Terrace, East London (East London).—Barclays National Bank, East London.

939/80—HARWOOD, Albert, 1801115047003, 33 Alexandra Road, King William's Town; Louisa Matilda Harwood, born Rudman, 1908240028004 (King William's Town).—Barclays National Bank, East London.

1571/80—LINDEMANN, Carl Fredrich, 0808295004002, 38 10th Avenue, Gonubie; Olga Hedwig Lindemann, born Benkenstein, 1507310003002 (East London).—Barclays National Bank, East London.

1919/80—LUPPNOW, Christina Winnie-Wood, 0302170006 001, 24 Rosedale Road, Amalinda, East London (East London).—Barclays National Bank, East London.

3118/79—MAARTENS, Nicolas Francois, 1807095048002, 33 Botha Road, Selborne, East London (East London).—Barclays National Bank, East London.

1392/80—MILNE, Cecil George, 0512315014005, 59 Beach Road, Nahoon, East London (East London).—Barclays National Bank, East London.

1346/80—VAN TONDER, Pieter Barend, born Beukes, 161 2190006008, 66 Louisa Street, King William's Town (King William's Town).—Hutton & Cook, King William's Town.

797/74/1B—GREEN, John Milton, 009964328, 25 Reynoldsview, Beacon Bay, East London, Second Amended First and Final Liquidation and Distribution (East London).—Greyvenstein & Spence, Barkly East.

1161/79/1—LUKE, Arthur Leonard, 003724779W, 27 Park Road, Port Alfred (Port Alfred).—Brian Shelver, Port Alfred.

2564/79—STRYDOM, Erasmus Johannes, 5706175128005, Crossstraat 15, Uitenhage.—Santamtrust, Port Elizabeth.

2579/79—NEL, Clarence Reginald, 4210165064008, 4 Kirkwood Street, North End, Port Elizabeth, First (Port Elizabeth). —Archibald Marock, Myers & Katz, Port Elizabeth.

3049/79—O'CONNOR, Hildegard Wilhelmina Johanna, 034 836351W, Newhaven Chronic Sick Home, 12 Cavendish Road, Vincent, East London (East London).—The Bax Partnership, East London.

3037/79—KILIAN, Peter, 121163148K, 20 Flamingo Avenue, Uitenhage; Elaine Brenda Kilian, born Marlick, 470 8180093019 (Uitenhage).—Sellick & McIntyre, Uitenhage.

3238/79—RIPPON, Rhona Mary, 0510130002007, Bryson Street, Komga (Komga).—Parsons & Peter, Komga.

917/80—BOUCHER, George Grove, 2001185009004, 54 Livingstone Road, Queenstown (Queenstown). — Elliott Brothers, Queenstown.

542/80—ROACH, Ruby Catherine, formerly Reddin, born Emmerson, 1303060016000, 55 Queens Road, King William's Town (King William's Town).—Hutton & Cook, King William's Town.

381/74/1—PARKIN, Max Athol, 098297509W, Peddie, Amended First and Final (East London).—Bate Chubb & Dickson, East London.

464/80—KNOESEN, Josiah Johannes, 1108295014005, Hawerford, Paterson; Johanna Gertruida Knoesen, gebore Van Loggerenberg, 174070012006 (Alexandria).—Standardtrust, Port Elizabeth.

1581/80 — SHANDLEY, Doris, 0809110002007, William Cockweg 1, Port Alfred (Bathurst).—Volkskas, Port Elizabeth.

1141/80—SMITH, Robert Rosslyn, 0909205017009, Fairfax, District of Bathurst (Port Alfred).—Standardtrust, Port Elizabeth.

869/80—SLABBERT, Hendrik Matthys, 4206015084006, Patiencestraat 38, Sidwell (Port Elizabeth).—Die Sentrale Eksekuteurskamer, Pretoria.

1181/80/1D—NEL, Petronella Magdalena, 1708080041004, Emily Hobhousestraat 5, Despatch; Jan Andries Nel (Uitenhage).—Conradie, Campher & Kirsten, Despatch.

71/80—LE ROUX, Cornelius Johannes, 1009145050001, 5 Parkin Street, Uitenhage; Levina Catherina le Roux, 070224 0020009 (Uitenhage).—Kaplan Loon Solomons & Blumberg, Port Elizabeth.

3179/76—WESTERBERG, Vincent Sayers, 0506175006002, Thornhill, Queenstown, Amended (Queenstown).—Elliott Brothers, Queenstown.

1328/80/2A — GYDE, Muriel Ermyntrude, spinster, Margaret House, Barley, near Royston, Hertfordshire, England (Port Elizabeth).—Pagden, Christian, Hanley & Parkin, Port Elizabeth.

343/80/1C—STRYDOM, Susanna Johanna Elizabeth, 101 263398W, Du Preezstraat 11, Sidwell, Port Elizabeth (Port Elizabeth).—Boland Bank, Port Elizabeth.

1139/80—NORTHCOTE, Phyllis Mary, formerly Simpson, born Prickett 0601280011003, Cottage C5, Fairlands, Cambridge West, East London (East London).—Standardtrust, East London.

1397/80—OOSTHUIZEN, Cornelis Martens, 0404185003005, Gousstraat, Hanover; Anna Catharina Oosthuizen, gebore Van Eatveld, 0702090002008 (Hanover).—Van der Merwe & Van Zyl, Hanover.

1690/80—KERNEKAMP, Hendry (Hendrik) August, 1906 095022007, Gwaba Cash Store, Brakfontein Road, Mooiplaats; Frances Maria Kernekamp, born Burger, 1902020046005 (East London).—Standardtrust, East London.

3184/79—SPARG, Molly Norma, 4310270052003, 77 Cumberland Street, Umtata (Umtata).—Alex, Aiken & Carter, East London.

1130/80—ERASMUS, Frederick, 4008185055000, Spoorweghuis 26, Graaff-Reinet; Elmarie Lorraine Erasmus, gebore Stewart (Graaff-Reinet).—Standardtrust, Port Elizabeth.

1393/80—PILLAY, Packery Ranga, 4212025059053, 10 Haworthia Drive, Malabar, Port Elizabeth; Assuvathi Pillay (Port Elizabeth).—Lawson Brown & Hutton, Port Elizabeth.

979/80—MACKLEY, Alan Robert Halcote (Halcot), 1206 025020001, Salisbury House, Rhodes Street, East London (East London).—The Bax Partnership, East London.

802/80—VENTER, Maria Catharina, born Viviers, 100430 0012003, Lot 25, Cove Ridge Extension, District of East London (East London).—The Bax Partnership, East London.

189/80—PILSON, Charles Alexander, 067376101, 3 Damant Lodge, Port Alfred; Hilda Clare Pilson, born Johnson, 067 376102 (Port Alfred).—Hutton & Cook, King William's Town.

1836/79—BARNARD, Anna Cecilia, 9906020006002, Audestraat, Rhodes (Barkly East).—J. W. Rauch & Co., Barkly East.

2866/79—SCHEEPERS, Philippus Bartholomeus, 04110350 04000, Huis Louisa Meyburgh, Assenburg Street, Kabega Park, Port Elizabeth (Port Elizabeth).—A. P. van Wyk, Alexandria.

3540/78/A—ELLIOTT, Denis Cyril Anderson, 2004115019 002, Cathcart, Second and Final (Cathcart).—Elliott Brothers, Cathcart.

708/80—DE LANGE, Johanna Catharina Elizabeth, 048 191694W, Geriatriese Saal W2, Setlaarshospitaal, Grahamstad (Grahamstad).—Mev. M. T. Dorfling, Kempton Park.

LUMINE TUO LUMEN VIDEBIMUS
Together in Excellence
University of Fort Hare

INSOLVENSIEWET- EN MAATSKAPPYWETTE-KENNISGEWINGS
INSOLVENCY ACT AND COMPANIES ACTS NOTICES

Vorm/Form J 28

BOEDELS OF MAATSKAPPYE WAT VOORLOPIG GESEKWESTREER OF GELIKWIDEER IS

Ingevolge artikel 17 (4) van die Insolvensiewet, 1936, en artikel 356 (1) van die Maatskappywet, 1973, word hierby deur die Meesters van die Hooggeregshof kennis gegee dat die boedels of maatskappye hieronder vermeld voorlopig op las van genoemde Hof gesekwestreer of gelikwideer is.

Die besonderhede word verstrek in die volgorde: Nommer van boedel/maatskappy; naam en beskrywing van boedel/maatskappy; datum waarop en afdeling van hof waardeur order gemaak is en op die aansoek van.

ESTATES OR COMPANIES SEQUESTRATED OR WOUND UP PROVISIONALLY

Pursuant to section 17 (4) of the Insolvency Act, 1936, and section 356 (1) of the Companies Act, 1973, notice is hereby given by the Masters of the Supreme Court that the estates or companies mentioned below have been sequestrated or wound up provisionally by order of the said Court.

The particulars are given in the following order: Number of estate/company; name and description of estate/company; date upon which and division of court by which order made and upon the application of.

T795/80—GOSSELS QUALITY HAMPERS AND MAIL ORDER COMPANY (PTY) LTD, having its registered office at c/o Norman Sifris & Company, 1014 Rand Central, 165 Jeppe Street, Johannesburg. 8/7/80, Witwatersrand Local. Ex parte.

T855/80—BARRIC INVESTMENTS (PTY) LTD, wat besigheid doen as dorpsontwikkelaars met hoofplek van besigheid 501 Koedoegebou, Pretoriusstraat, Pretoria. 16/7/80, Transvaalse Provinsiale. Nicolaas Marthinus Willem Dekker.

T924/80—VAN EDEN, Nicolaas Johannes Hendrik, a building contractor, 35 Fifth Street, Greymont, Johannesburg. 12/8/80, Witwatersrand Local. Dorothea Petronella van Eden.

T925/80—MULDER, John, a salesman who resides at 34 El Prodo, Jim Fouche Avenue, Randpark, Ridge Extension 13, Randburg. 12/8/80, Witwatersrand Local. Leon Isaacs and Isaacs.

T926/80—BURDLATH INDUSTRIES (PTY) LTD, carrying on business under the style of Everlastex Coatings Manufacturers Contractors, with its principal place of business at 18 Plantation Road, Eastleigh, Edenvale, Tvl, and having its registered office at 3 University Road, Auckland Park, Johannesburg, Tvl. 12/8/80, Witwatersrand Local. Hymie Tucker Finance Company (Pty) Ltd.

T934/80—STRYDOM, Douglas Johannes, p/a Frasers- en Voortrekkerstraat, Lydenburg, en het voorheen handel gedryf te Hoedspruit onder die naam van Phumalanga Trading Store. 12/8/80. Transvaalse Provinsiale. William David Reed.

T905/80—BAMBERGER, Carel Arnoldus, 'n boer van die plaas Frischgewaagd, distrik Ottosdal. 5/7/80, Transvaalse Provinsiale. Ferreira Broers (Edms.) Bpk.

T897/80—ROBERTSON MALLET ADVERTISING (PTY) LTD, having its registered office at 311 Amcor House, 88 Marshall Street, Johannesburg. 5/8/80, Witwatersrand Local. Sparhams-Kb (Pty) Ltd, trading as Sparham and Ford.

T899/80—FANIE VAN ZYL WONINGS (EDMS.) BPK., registered office at c/o Chartered Accountant F. J. Wessels, Second Floor, Trust Bank Centre, Hill Street, Randburg, and having its principal place of business at 72 Rabie Street, Fontainebleau, Randburg. 5/8/80, Witwatersrand Local. De Wet & Minnie Construction (Pty) Ltd.

T929/80—ACRYTEX (EDMS.) BPK., p/a Kellerman, Nel & Bruni, Santrakoorgebou 424, Pretoriusstraat, Pretoria. 12/8/80, Transvaalse Provinsiale. Reginald Frederick Owen van Deventer.

T927/80—BETTENCOURT CONSTRUCTION (PTY) LTD, having its registered office at c/o Robert Taylor, 401 Fourth Floor, 15 Anderson Street, Johannesburg. 12/8/80, Transvaal Provincial. Pioneer Ready Mixed Concrete (Pty) Ltd.

T928/80—ATONIUM ONDERNEMINGS (EDMS.) BPK., having its registered office at 19th Floor, Volkskas Centre, Pretorius Street, Pretoria. 12/8/80, Transvaal Provincial. Total South Africa (Pty) Ltd.

T938/80—SWAZI PINE PRODUCTS (PTY) LTD, having its registered office at 235 Union Centre East, 55 Harrison Street, Johannesburg, and carries on business as furniture exporters at Seventh Floor, Rennie House, Braamfontein, Johannesburg. 13/8/80, Witwatersrand Local. Friedlein & Co. (Pty) Ltd.

T919/80—ASTRID LOODGIETERS (EDMS.) BPK., met geregistreerde adres te Malmesburystraat 669, Wingate Park, Pretoria. 12/8/80, Transvaalse Provinsiale. Najadu Bouers (Edms.) Bpk.

T809/80—TOLO MYNBOU (EDMS.) BPK., c/o M. W. Swartz & Co., 420 Nedbank Centre, Witbank, 8/7/80, Transvaal Provincial. Highveld Hire (Pty) Ltd.

T912/80—DE WET, Francois Alwyn Jr., voorheen handeldrywende as Terwet Boerdery en tans woonagtig te die plaas Last Hope, distrik Louis Trichardt. 5/8/80, Transvaalse Provinsiale. Francois Johannes Olivier.

T712/80—TOMCOM ENGINEERING (PTY) LTD, having its registered office at 10 Eisenhower Street, Vereeniging. 10/6/80, Transvaal Provincial. Electro Magnet Company (Pty) Ltd.

E80/80—STER BUILDERS (PTY) LTD, 'n privaatmaatskappy met geregistreerde hoofkantoor en handeldrywende as verf- en boukontrakteurs onder die handelsnaam van Perfecto Coatings te p/a J. N. Marais van Niekerk & Kie., Hoofstraat 73, Despatch en hoofbesigheid te 18de Verdieping, Santamgebou, Hoofstraat 140, Port Elizabeth. 29/7/80, Suid-oos-Kaapse Plaaslike. Johannes Jacobus Pool.

E82/80—P E OFFICE SUPPLIERS (PTY) LTD, with its registered address at c/o Max Finn & Partners, Eighth Floor, Nedbank Centre, Main Street, Port Elizabeth, and carries on the business of selling commercial stationery and office equipment at 2 Albany Road, Port Elizabeth. 5/8/80, South-Eastern Cape Local. P E Office Suppliers (Pty) Ltd.

E83/80—JAY BEES BOUTIQUE (PTY) LTD, carrying on business as a ladies dress shop styled Moulon Rouge, at 49 Cathcart Street, King William's Town, with registered office at c/o Hoek Wichahn & Cross, Xhosa Development Corporation Buildings, Machester Road, Chiselhurst, East London. 7/8/80, Eastern Cape Local. Hendrina Susanna Engelbrecht.

C317/80—ASHLEY CAPLAN & COMPANY (PTY) LTD, trading as Galaxie TV, registered office at c/o D & A Ipp & Co., 407 Barclays Bank Buildings, Heerengracht, Cape Town. 25/7/80, Cape of Good Hope Provincial. Gelfin (Pty) Ltd.

C326/80—QUARZITE CENTRE (PTY) LTD, registered office at 1509 Pleinpark Buildings, Plein Street, Cape Town. 1/8/80, Cape of Good Hope Provincial. David Ian Korodetz.

N236/80—NATAL AIR BRAKES (PTY) LTD, c/o McLean & Fairbarn, Third Floor, Southern Life Buildings, 318 Smith Street, Durban. 28/7/80, Durban and Coast Local. Clive Wessel Robinson Porter.

C321/80—HENDRICKS, Hassan, 2 Kismet Flats, Kismet Road, Athlone. 5/8/80, Cape of Good Hope Provincial. Achmat Bardien.

C323/80—TRANSKAAP KONSTRUKSIE (EDMS.) BPK., registered office at 201 Permanent Buildings, Main Road, Strand. 1/8/80, Cape of Good Hope Provincial. Lourens Stefanus de Wet.

B113/80—ELLIS, John Christian, a major male presently residing at 105 Key West, Sandown Road, Durban. 7/8/80, Orange Free State Provincial. Standard Bank of S.A. Ltd.

B112/80—GORDON, Johannes Hendrik, Jr., 'n meerderjarige amptenaar in diens van Vetsak Bothaville, en woonagtig te Brandstraat 60, Kroonstad. 7/8/80, Orange Free State Provincial. Johannes Hendrik Gordon Snr.

B114/80—BOTHMA, Dawid Louis, 'n meerderjarige prokureur praktiserende as sulks onder die naam en styl Bothma & Kie. te Voortrekkerstraat, Ficksburg en woonagtig te Ficksburg. 8/8/80, Oranje-Vrystaatse Provinsiale. Randvirkoop (Edms.) Bpk.

Vorm/Form J 29

EERSTE BYEENKOMSTE VAN SKULDEISERS, KONTRIBUANTE, LEDE OF SKULDBRIEF-HOUERS VAN GESEKWESTREERDE BOEDELS, MAATSKAPPYE IN LIKWIDASIE OF ONDER VOORLOPIGE GEREGTELIKE BESTUUR

Nademaal die boedels of maatskappye hieronder vermeld op las van die Hooggeregshof van Suid-Afrika gesekwestreer, gelikwideer of onder voorlopige geregtelike bestuur geplaas is, word hierby deur die Meesters van die Hooggeregshof ingevolge artikels 17 (4) en 40 (1) van die Insolvensiewet, 1936, artikels 119 (3), 125 (1) en 196*bis* (4) van die Maatskappywet, 1926, en artikels 356 (1), 364 (1) en 429 van die Maatskappywet, 1973, kennis gegee dat 'n eerste byeenkoms van skuldeisers, kontribuante, lede of skuldbrief-houers van genoemde boedels of maatskappye op die datums, ure en plekke hieronder vermeld vir die bewys van vorderings teen die boedels of maatskappye, die verkiesing van kurators, likwidateurs of geregtelike bestuurders, of vir die doeleindes bedoel in artikels 364 of 431 van Wet 61 van 1973, na gelang van die geval, gehou sal word.

Die besonderhede word verstrek in die volgorde: Nommer van boedel/maatskappy; naam en beskrywing van boedel/maatskappy; datum van die voorlopige en datum van die finale bevel, en afdeling van hof waardeur order gemaak is, en datum, uur en plek van byeenkoms.

In 'n plek waarin 'n kantoor van 'n Meester is, word die byeenkoms voor die Meester en op ander plekke voor die Landdros gehou.

FIRST MEETINGS OF CREDITORS, CONTRIBUTORIES, MEMBERS OR DEBENTURE-HOLDERS OF SEQUESTRATED ESTATES, COMPANIES BEING WOUND UP OR PLACED UNDER PROVISIONAL JUDICIAL MANAGEMENT

The estates and companies mentioned below having been placed under sequestration, being wound up or having been placed under provisional judicial management by order of the Supreme Court of South Africa, Masters of the Supreme Court hereby give notice, pursuant to sections 17 (4) and 40 (1) of the Insolvency Act, 1936, sections 119 (3), 125 (1) and 196*bis* (4) of the Companies Act, 1926, and sections 356 (1), 364 (1) and 429 of the Companies Act, 1973, that a first meeting of creditors, contributories, members or debenture-holders of the said estates or companies will be held on the dates and at the times and places mentioned below, for proof of claims against the estates or companies, the election of trustees, liquidators or judicial managers or for the purposes referred to in sections 364 or 431 of Act 61 of 1973, as the case may be.

The particulars are given in the following order: Number of estate/company; name and description of estate/company; date of the provisional and date of the final order, and division of court by which order made, and date, hour and place of meeting.

Meetings in a place in which there is a Master's Office, will be held before the Master; elsewhere they will be held before the Magistrate.

T1475/79—BOOYSENS FURNITURE FACTORY (PTY) LTD, having its registered office at Second Floor, Standard Bank Chambers, corner of Commissioner and Troye Streets, Johannesburg, and carrying on business as a manufacturer of furniture at 17 Maxwell Street, Booysens, Johannesburg. 19/10/79—12/8/80, Witwatersrand Local. 10/9/80, 09h00, Johannesburg.

T825/80—ISLAND OF FUN (PTY) LTD, c/o I. J. Coetzee & Company, 10th Floor, Hallmark Buildings, 237 Proes Street, Pretoria. 15/7/80—12/8/80, Transvaal Provincial. 11/9/80, 10h00, Pretoria.

T795/80—GOSSEL'S QUALITY HAMPERS AND MAIL ORDER COMPANY (PTY) LTD, having its registered office at c/o Norman Sifris & Co., 1014 Rand Central, 165 Jeppe Street, Johannesburg. 8/7/80—12/8/80, Witwatersrand Local. 10/9/80, 09h00, Johannesburg.

T850/80—S.A. BOORKONSULTANTE EN MAKELAARS (EDMS.) BPK., carrying on business inter alia, under the name and style of S.A. Boorkonsultante, and having its registered office at 234 Dykor Street, Silverton, Pretoria. 22/7/80—12/8/80, Transvaal Provincial. 11/9/80, 10h00, Pretoria.

T856/80—BENADE, André, Southveld Hostel, Capricorn Hoërskool, Oosstraat, Pietersburg. 22/7/80—12/8/80, Transvaalse Provinsiale.12/9/80, 09h00, Pietersburg.

T860/80—LE ROUX, Hendrik Johannes, woonagtig te Matte Courtwoonstelle 6, Wolmaransstraat, Rustenburg. 22/7/80—12/8/80, Transvaalse Provinsiale. 10/9/80, 09h00, Rustenburg.

T768/80—PAVLOVIC, Radisa, formerly residing at 11 Zeta Place, Glenesk, Johannesburg, and formerly the proprietor of Chave D'Ouro Restaurant, 107 Kerk Street, Johannesburg, and whose present address is unknown 24/6/80—8/7/80, Witwatersrand Local. 10/9/80, 09h00, Johannesburg.

T738/80—RAIL AND INDUSTRIAL LAYOUTS (CAPE) (PTY) LTD, creditor's voluntary winding-up. 10/9/80, 09h00, Johannesburg.

T829/80—DU PREEZ, Johannes Hendrik, woonagtig te Hardekoolstraat 22, Uitbreiding 10, Brits. 15/7/80—5/8/80, Transvaalse Provinsiale. 15/9/80, 10h00, Brits.

B108/80—SACKS, Chron, trading as Radio Sacks, a retail radio supplier at 11 Bester Street, Harrismith, O.F.S. 17/7/80—7/8/80, Orange Free State Provincial. 10/9/80, 09h00, Harrismith.

T808/80—STEYNPOT KONSTRUKSIE (EDMS.) BPK., 15b Voortrekker Street, Middelburg, Tvl. 8/7/80—12/8/80, Transvaal Provincial. 10/9/80, 10h00, Middelburg.

T809/80—TOLO MYNBOU (EDMS.) BPK., c/o M. W. Swartz & Company, Nedbank Centre 420, Witbank. 8/7/80—12/8/80, Transvaal Provincial. 12/9/80, 09h30, Witbank.

T900/80—SAFRIKEM (PTY) LTD. Voorlopige bevel 5/8/80, Witwatersrand Local. 10/9/80, 09h00, Johannesburg.

T837/80—HATTINGH, Erasmus Albertus, woonagtig te Collinstraat 6, Ermelo, en 'n Grondverskuiwingkontrakteur van beroep. 12/8/80. Transvaalse Provinsiale, 12/9/80, 09h30, Ermelo.

T930/80—COMMERCIAL GUARANTEES LTD, under provisional judicial management. 13/8/80, Witwatersrand Local. 10/9/80, 09h00, Johannesburg.

T703/80—EVNAT HOTEL (PTY) LTD, having its registered office at Nedfin Place, 53 Simmonds Street, corner of Kerk Street, Johannesburg. 3/6/80—8/7/80, Witwatersrand Local. 10/9/80, 09h00, Johannesburg.

T752/80—KRIEL, Abraham Jacobus, Colleenstraat 15, Bendorpark, Pietersburg. 17/6/80—29/7/80, Transvaalse Provinsiale. 12/9/80, 09h00, Pietersburg.

N193/80—BURGER, Stefanus Ignatius, 8 Dagwood Crescent, St Winifreds, South Coast. 19/6/80—9/7/80, Natal Provinsial. 11/9/80, 14h00, Durban.

N178/80—CORRIDOR AGENCIES (PTY) LTD, Roberts, Haley & Murray, United Buildings, West Street, Durban. 12/6/80—29/7/80, Natal Provincial. 11/9/80, 14h00, Durban.

N219/80—OOSTHUIZEN, Johannes Stefanus Swart, 5 Highbiscus Road, Cleland, Pietermaritzburg. 17/7/80—7/8/80, Natal Provincial. 12/9/80, 10h00, Pietermaritzburg.

B82/80—VAN ASWEGEN, Willem Jacobus, 'n meerderjarige Blanke manspersoon wat tans werksaam is by Welkom Goudmyn, Welkom, O.V.S., en woonagtig is te Mercutiostraat 140, Welkom, O.V.S. 12/6/80—7/8/80, Oranje-Vrystaatse Provinsiale. 10/9/80, 10h00, Welkom.

B106/80—AUGUSTINUS, Malan Johannes, 'n meerderjarige manspersoon tans woonagtig te Gedeelte 2, Maizecor, Witrivier, en werksaam te Maizecor, Witrivier, in die distrik Witrivier, Tvl. 17/7/80—7/8/80, Oranje-Vrystaatse Provinsiale. 10/9/80, 10h00, Witrivier.

T790/80—FERREIRA, Gerhardus Jacobus, woonagtig te Plot 51, Rosashof, distrik Vanderbijlpark. 3/7/80—5/8/80, Transvaalse Provinsiale, 12/9/80, 10h00, Vanderbijlpark.

Vorm/Form 1

AANSTELLING VAN KURATORS EN LIKWIDATEURS EN BEWYS VAN VORDERINGS IN GESEKWESTREERDE BOEDELS OF MAATSKAPPYE IN LIKWIDASIE

Ingevolge artikels 40 (3), 56 (3) en 77 van die Insolvensiewet, 1936, artikels 129, 179 en 182 van die Maatskappywet, 1926 en artikels 339, 366, 375 (5) (b) en 402 van die Maatskappywet, 1973, word hierby kennis gegee dat die persone hieronder vermeld as kurators of likwidateurs aangestel is, na gelang van die geval, en dat persone wat enigiets aan die boedels of maatskappye verskuldig is die skulde, tensy anders vermeld, onmiddellik by genoemde kurators of likwidateurs mo t betaal.

Byeenkomste van skuldeisers of kontribuante van genoemde boedels of maatskappye sal gehou word op die datums, ure en plekke hieronder vermeld vir die bewys van vorderings teen die boedels of maatskappye, vir die ontvangs van die verslae van die kurators of likwidateurs oor die sake en toestand van die boedels of maatskappye, en om opdragte aan die kurators of likwidateurs uit te reik betreffende die verkoop of opvordering van ge leeltes van die boedels of bates van die maatskappye of betreffende aangeleenthede rakende die beheer daarvan.

Die besonderhede word verstrek in die volgende: Nommer van boedel/maatskappy; naam en beskrywing van boedel/maatskappy; naam en adres van kurator of likwidateur, en datum, uur en plek van byeenkoms en tydperk waarin skuld betaal moet word, indien dit nie onmiddellik moet geskied nie.

In 'n plek waarin 'n kantoor van 'n Meester is, word die byeenkoms voor die Meester en op ander plekke voor die Landdros gehou.

APPOINTMENT OF TRUSTEES AND LIQUIDATORS AND PROOF OF CLAIMS IN SEQUESTRATED ESTATES OR COMPANIES BEING WOUND UP

Pursuant to sections 40 (3), 56 (3) and 77 of the Insolvency Act, 1936, sections 129, 179 and 182 of the Companies Act, 1926, and sections 339, 366, 375 (5) (b) and 402 of the Companies Act, 1973, notice is hereby given that the persons mentioned below have been appointed trustees or liquidators, as the case may be, and that the persons indebted to the estates or companies are required to pay their debts to them forthwith unless otherwise indicated.

Meetings of creditors or contributories of the said estates or companies will be held on the dates and at the times and places mentioned below, for proof of claims against the estates or companies, for the purpose of receiving the trustees' or liquidators' reports as to the affairs and conditions of the estates or companies and for giving the trustees or liquidators directions concerning the sale or recovery of any parts of the estates or assets of the companies or concerning any matter relating to the administration thereof.

The particulars are given in the following order: Number of estate/company; name and description of estate/company; name and address of trustee or liquidator and date, hour and place of meeting and period within which debt must be paid, if this is not to be done forthwith.

Meetings in a place in which there is a Master's Office, will be held before die Master; elsewhere they will be held before the Magistrate.

B88/80—P & D BAM BROERS (EDMS.) BPK., met geregistreerde hoofkantoor en vernaamste plek van besigheid te Voortrekkerstraat 10, Brandfort; Charl Jacob Venter, Posbus 153, Bloemfontein. 11/9/80, 10h00, Brandfort.

T209/80—A.C.P. INVESTMENTS LTD, in voluntary liquidation; A. W. Laubscher, P.O. Box 578, Pretoria, 0001.

T185/80—LONGTILL HOMES AND LANDS (PTY) LTD, in liquidation; Albert Ruskin, N. Bowman and M. S. de Villiers, Joint Liquidators, c/o Albert Ruskin Trust Board (Pty) Ltd, P.O. Box 7976, Johannesburg. 10/9/80, 10h00, Randburg.

T377/80—WOODMAN, David John; Philip David Berman, c/o Albert Ruskin Trust Board (Pty) Ltd, P.O. Box 7976, Johannesburg. 26/9/80, 10h00, Vanderbijlpark.

N41/80—BHAIJEE, Essop Ebrahim, who resides at Alfredia Farm, Mair Harding Road, Paddock, Natal; J. A. Bruce of Security Executor and Trust Company Ltd, P.O. Box 1050, Durban. 11/9/80, 10h00, Port Shepstone.

N27/80—VAWDA, Yacoob Dawood, formerly trading as Jakes Discount Centre, Main Road, Dannhauser; M. J. Ensor, c/o Security Executor and Trust Company Ltd, P.O. Box 1050, Durban. 11/9/80, 10h00, Dannhauser.

N100/80—OMARJEE, A. D.; R. J. Strydom, for Metboard (Natal) Ltd, P.O. Box 3912, Durban. 11/9/80, 10h00, Stanger.

C176/80—SHER, J.; B. W. Smith, c/o Kilpin Trust (Pty) Ltd, P.O. Box 4205, Cape Town, 8000 12/9/80, 09h00, Cape Town.

E49/80—JOHNSON, Walter Fellows; Basil Kenneth Spengler van Zyl, for Syfrets Trust and Executor SA Ltd, 94 Main Street, Port Elizabeth. 11/9/80, 14h00, Port Elizabeth.

T864/80—BRIONI UNDERTAKINGS (NO. ONE) (PTY) LTD, in voluntary liquidation; J. M. Stott, P.O. Box 9414, Johannesburg.

T1243/79—DIMITRI, P. R.; J. Marais, Seventh Floor, NBS Buildings, Rissik Street, Johannesburg. 10/9/80, 09h00, Johannesburg.

B237/79—HOLLINGTON, William John Michael, 'n meerderjarige manspersoon, tydens sekwestrasie woonagtig te Namaquastraat 62, Glen Harmony, Virginia; C. J. Venter, Posbus 153, Bloemfontein. 17/9/80, 10h00, Virginia.

E177/79—VAN NIEKERK, W. S.; J. J. Matthee, Residentia Trust (Edms.) Bpk. 12/9/80, 10h00, Steynsburg.

N385/79—SEWNARAIN, S.; Metboard (Natal) Ltd, P.O. Box 3912, Durban. 15/9/80, 09h00, Port Shepstone.

N148/80—KHAN, Aziz; Keith Duncan Krumm, of Sable Trustees, P.O. Box 4478, Durban, 4000. 26/9/80, 10h00, Pietermaritzburg.

N99/80—HENFREY & MAY (PTY) LTD, in liquidation; B. Rulten, c/o Syfrets Trust and Executor S.A. Ltd, P.O. Box 135, Durban, 4000. 11/9/80, 14h00, Durban.

C78/80—VAN ZYL, H. C.; A. M. Rennie, c/o Syfrets Trust Co. Ltd, 24 Wale Street, Cape Town, 8001. 12/9/80, 09h00, Paarl.

UC14736—MOOREDENE FLATS (PTY) LTD; Alan Peter Munro, 1007 Allied Buildings, Gardiner Street, Durban, 4001.

T442/80—WELFIT SHOES (PTY) LTD, in likwidasie; B. G. S. de Wet, Posbus 2851, Johannesburg. 17/9/80, 09h00, Johannesburg.

T139/80—CAROLINA TRUST EN ONTWIKKELINGSMAATSKAPPY (EDMS.) BPK., in likwidasie; B. G. S. de Wet, Posbus 2851, Johannesburg. 19/9/80, 08h30, Ermelo.

T440/80—BALLINE FOOTWEAR (NATAL) (PTY) LTD, in likwidasie; B. G. S. de Wet, Posbus 2851, Johannesburg. 17/9/80, 09h00, Johannesburg.

T719/80—BOTHA, Ernest; J. R. Galloway, Posbus 2851, Johannesburg. 24/9/80, 10h00, Boksburg.

T237/80—EHRKE, Dennis Bernard; F. G. Gay, Posbus 2851, Johannesburg. 24/9/80, 09h00, Johannesburg.

C282/80—WESTMINSTER HOUSE (PTY) LTD, in voluntary liquidation; A. Bezuidenhout, 1 Dorp Street, Cape Town.

C293/80—ANTARTIC COLD STORAGE (PTY) LTD, in voluntary liquidation; A. Bezuidenhout, 1 Dorp Street, Cape Town.

N78/80—PETER AND TOLMAY (PTY) LTD; D. F. Waters, c/o Coopers & Lybrand, 10th Floor, Shell House, 9 Riebeek Street, Cape Town. 12/9/80, 10h00, Pietermaritzburg.

N52/80—DAVBERG HOTELS (PTY) LTD, in voluntary liquidation; Martin Ian Zulberg, 301 Durban Bay House, 333 Smith Street, Durban. 11/7/80.

C304/80—WALTMOR (PTY) LTD, in voluntary liquidation; Nathan David Benson, P.O. Box 4545, Cape Town.

T704/80—SWART, J. F.; C. R. G. Fisher, c/o Syfrets Trustees (Tvl) Ltd, P.O. Box 61058, Marshalltown, 2107. 17/9/80, 09h00, Johannesburg.

T634/80—FASCOM (PTY) LTD, in liquidation; B. T. Whitson, c/o Syfrets Trust, P.O. Box 1830, Pretoria, 0001. 11/9/80, 10h00, Pretoria.

T595/80—TRULITE ELECTRICAL CONTRACTORS (PTY) LTD; G. H. J. Venter, P.O. Box 1474, Johannesburg. 10/9/80, 09h00, Johannesburg.

T615/80—UNTIED, D.; G. H. J. Venter, P.O. Box 1474, Johannesburg. 19/9/80, 09h30, Germiston.

T674/80—ANALYTICAL REFERENCES AND PUBLICATIONS (PTY) LTD, in liquidation; I. S. Fynn, P.O. Box 56381, Pinegowrie, 2123. 10/9/80, 09h00, Johannesburg.

T289/80—JACOBS, P. A. R.; J. H. Blignaut, P.O. Box 2103, Johannesburg, 2000. 11/9/80, 09h00, Randfontein.

T1913/77—TRICO HOLDINGS (PTY) LTD, in liquidation; 10/9/80, 09h00, Johannesburg.

B150/79—PLUS BANDE BETHLEHEM (PTY) LTD, in liquidation; 10/9/80, 09h30, Kroonstad.

T240/79—LENNON, Thomas P.; 17/9/80, 10h00, Randburg.

T742/80—BOTHA, A. C. J.; Verne Anthony van Diggelen. 17/9/80, 09h00, Rustenburg.

Vorm/Form 2

BYEENKOMS VAN SKULDEISERS IN GESEKWESTREERDE BOEDELS OF MAATSKAPPYE IN LIKWIDASIE

Ingevolge artikels 41 en 42 van die Insolvensiewet, 1936, artikels 179 en 182 van die Maatskappywet, 1926, en artikels 339 en 366 van die Maatskappywet, 1973, word hierby kennis gegee dat 'n byeenkoms van skuldeisers in die gesekwestreerde boedels of maatskappye in likwidasie hieronder vermeld, gehou sal word met aanduiding van die nommer van boedel/maatskappy; die naam en beskrywing van boedel/maatskappy; die datum, uur en plek van byeenkoms en die doel van byeenkoms.

In 'n plek waarin 'n kantoor van 'n Meester is, word die byeenkoms voor die Meester en in ander plekke voor die Landdros gehou.

MEETING OF CREDITORS IN SEQUESTRATED ESTATES OR COMPANIES BEING WOUND UP

Pursuant to sections 41 and 42 of the Insolvency Act, 1936, sections 179 and 182 of the Companies Act, 1926, and sections 339 and 366 of the Companies Act, 1973, notice is hereby given that a meeting of creditors will be held in the sequestrated estates or companies being wound up mentioned below, indicating the number of estate/company; the name and description of estate/company; the date, hour and place of meeting and the purpose of meeting.

Meetings in a place in which there is a Master's Office, will be held before the Master; elsewhere they will be held before the Magistrate.

E15/79/1—VIC TRUTER ENTERPRISES (PTY) LTD, construction engineers and earth-moving contractors. 10/9/80, 10h00, Graaff-Reinet. To prove claims.

T424/80—VERMEULEN, P. A. 12/9/80, 09h00, Rustenburg. Proof of claims.

B15/80—BOTHA, Maria Elizabeth, voorheen handeldrywend as n algemene handelaar onder die naam Luna Stores, Philippolis, 10/9/80, 10h00, Bloemfontein. Bewys van verdere eise.

T303/80—BENEY, Joseph Clarence. 26/9/80, 09h30, Germiston. Proof of claims.

T176/80—GREYLING, Pieter Johannes. 10/9/80, 10h00, Middelburg. Proof of claims.

T142/78—AFRICA WIDE MAIL ORDER SERVICES (PTY) LTD, in liquidation. 17/9/80, 09h00, Johannesburg. Proof of claims.

T2005/78—KRUGER, Casper Jan Hendrik. 19/9/80, 10h00, Springs. Proof of claims.

E16/80—MORTIER, Ronald Johannes, formerly trading as King Rat. 11/9/80, 14h00, Port Elizabeth. Proof of debt.

N89/80—SHORT & McDONALD (1921) (PTY) LTD, in liquidation. 11/9/80, 14h00, Durban. Proof of claims.

N145/79—S.G.E. (PTY) LTD. 11/9/80, 14h00, Durban. Proof of claims.

N13A/80—EAGLE JOINERY WORKS, a partnership of which the partners are Gurunadahn Padayachi and Rajaperan Padayachee, who traded at 7 Failsworth Road, Allandale, Pietermaritzburg, Natal. 12/9/80, 10h00, Pietermaritzburg. Proof of claim.

N412/78—RAMSUNDER (R. D, Maharaj). 11/9/80, 14h00, Durban. Proof of claim.

N318/79—GODLEY, Mervyn, who resides at 53 Moberley Road, Nyala Park, Empangeni, Natal. 10/9/80, 14h00, Empangeni. 1. Proof of claims. 2. Adoptions of resolutions concerning sale of assets and matters relating to the administration of the estate.

T588/80—ALBERTSWAN CONSTRUCTION (PTY) LTD. 12/9/80, 10h00 Pretoria. Proof of claims and interrogation of witnesses.

N394/79—NESMOTH MOTORS (PTY) LTD, in liquidation. 11/9/80, 14h00, Durban. Proof of claims.

E59/73/3—BENTLEY, Harold George Jr and Hubert Auguste Roux, formerly trading in partnership under the name and style of The Curry Den. 11/9/80, 14h00, Port Elizabeth. For proof of debt and to vote upon the following resolution:

That the action of the trustee in the insolvent estate of H. G. Bentley in releasing to the insolvent the undivided one-half share of an immovable property, being a house situate at 157 Prospect Road, Walmer, which the insolvent inherited from the estate of his father, the late H. G. Bentley, without any consideration whatever be and is hereby approved.

B47/80—BOTHA, Jacob Pister, 'n skrynwerker van Bloemfontein. 10/9/80, 10h00, Bloemfontein. Bewys van verdere eise.

C197/79—PETRIE, T. M. 12/9/80, 09h00, Cape Town. Proving of claims.

C504/79 — TYGERBERG DEVELOPMENT COMPANY (PTY) LTD. 12/9/80, 09h00, Cape Town. Proof of claims.

C131/80—ADAMS, M. A. 12/9/80, 09h00, Cape Town. Further proof of claims.

E77/79/3—WELLBUILT CONSTRUCTION (PTY) LTD, in liquidation. 11/9/80, 14h00, Port Elizabeth. Proof of debt.

E10/80—SCHOLTZ, Isak Petrus. 11/9/80, 14h00, Port Elizabeth. Proof of debt.

K51/79—STRAUSS, Willem Daniel. 12/9/80, 10h00, Upington. Bewys van eis.

E42/80—STARWARD ESTATES (PTY) LTD, in liquidation. 11/9/80, 14h00, Port Elizabeth. Proof of debt.

E41/80—INGBAR PROPERTIES (PTY) LTD, in liquidation. 11/9/80, 14h00, Port Elizabeth. Proof of debt.

T1554/79—BRAKTON (PTY) LTD, in liquidation. 10/9/80, 10h00, Alberton. Further proof of claims.

T994/79—TOMLIN, I. F. 12/9/80, 09h30, Germiston. For further proof of claims.

B227/79—LOUW, George Frederick. 3/9/80, 10h00, Welkom. Om verdere eise te bewys.

C171/77—SYSTEMS DISTRIBUTORS S.A. (PTY) LTD, in liquidation. 19/9/80, 09h00, Cape Town. Proof of debt.

T1689/76—WESSELS, Gideon Lourens Strydom. 29/8/80, 10h00, Pretoria. Bewys van eise.

T1515/79—BOTHA, J. H. 12/9/80, 09h30, Volksrust. Proof of claims.

T1966/78—VAN DEN BERG, A. 10/9/80, 10h00, Randburg. Proof of claims.

B216/79—NEGRINI, Stephanus Johannes, 'n ontsetter woonagtig te Dalmeidastraat 30, Welkom. 10/9/80, 10h00, Welkom. Bewys van verdere eise.

T771/77—ENSLIN, Hermans Jakobus. 19/9/80, 10h00, Pretoria. Further proof of claims.

T2002/78—VAN DEN BERG, Jacobus Nicolaas. 16/9/80, 14h00, Carolina. Further proof of claims.

T1768/79—VILJOEN, A. J. 17/9/80, 10h00, Potchefstroom. Verdere bewys van eise.

T1434/79/ASR2/A—AL'S PLANT HIRE (NATAL) (PTY) LTD. 17/9/80, 09h00, Johannesburg. Liquidator's report, resolutions for adoption and proof of claims.

T453/80—FREIGHT BUREAU (PTY) LTD, in liquidation. 10/9/80, 09h00, Johannesburg. 1. Further proof of claims. 2. Examination of witnesses.

T109/80—ODION (EDMS.) BPK., in likwidasie 12/9/80, 10h00, Pretoria. Bewys van eise.

C43/80—DE LANGE, Jan Gerhardes, a farmer of Welgemoed, Akker-en-Dam, Calvinia, 12/9/80, 10h00, Cape Town. Proof of claims.

T1755/78—PURCOCKS, K. E. 19/9/80, 08h30, Ermelo. Special meeting for late proof of claims.

E160/79—BLUHM, K. A. 29/8/80, 10h00, East London. Special meeting of creditors for further proof of claims.

C327/79—PALMO MEAT AND MEAT PRODUCTS (PTY) LTD. 26/9/80, 09h00, Cape Town. Proof of claims.

T23/80—M & C TRANSPORT (EDMS.) BPK., in likwidasie. 17/9/80, 09h00, Johannesburg. Verdere bewys van eise.

T309/80—J. ROSENDAHL'S TRANSPORT (PTY) LTD, in likwidasie. 8/10/80, 10h00, Benoni. Verdere bewys van eise.

T233/80—VAN RENSBURG, L. P. 19/9/80, 10h00, Vanderbijlpark. Verdere bewys van eise.

T499/80—RUPERT ALLSOPP (PTY) LTD, in likwidasie. 8/10/80, 10h00, Randburg. Verdere bewys van eise.

E5/80—DU PREEZ, H. P. T. L. 10/9/80, 10h00, Queenstown. Special meeting of creditors to consider whether to release to the insolvent any or all of his household furniture and effects appraised at the sum of R1 120.

B198/78/A—HATTINGH, C. P. (Landboukredietboedel). 10/9/80, Bloemfontein. Bewys van eise.

T1131/79—DU TOIT, S. L. 10/9/80, 10h00, Potchefstroom. Verdere bewys van eise.

Vorm/Form 3

VERLENGING VAN TERMYN VIR INDIENING VAN LIKWIDASIE-, DISTRIBUSIE- OF KONTRIBUSIEREKENINGS IN GESEKWESTREERDE BOEDELS OF MAATSKAPPYE IN LIKWIDASIE

Ingevolge artikel 109 (1) van die Insolvensiewet, 1936, en artikel 135 (1) (c) van die Maatskappywet, 1926, word hierby kennis gegee dat kurators of likwidateurs van die gesekwestreerde boedels of maatskappye in likwidasie, na gelang van die geval, hieronder vermeld voornemens is om na afloop van 'n termyn van 14 dae vanaf die datum van publikasie hiervan, die betrokke Meesters om 'n verlenging van die termyne hieronder genoem, vir die indiening van likwidasie-, distribusie- of kontribusierekenings te versoek.

Die besonderhede word verstrek in die volgorde: Nommer van boedel/maatskappy; naam en beskrywing van boedel/maatskappy; naam en datum van aanstelling van kurator of likwidateur; datum waarop rekening ingedien moet word; termyn van verlangde verlenging en by watter Meester aansoek gedoen sal word.

EXTENSION OF TIME WITHIN WHICH TO LODGE LIQUIDATION ACCOUNTS AND PLANS OF DISTRIBUTION OR CONTRIBUTION IN SEQUESTRATED ESTATES OR COMPANIES BEING WOUND UP

Pursuant to section 109 (1) of the Insolvency Act, 1936, and section 135 (1) (c) of the Companies Act, 1926, notice is hereby given that after the expiration of a period of 14 days as from the date of publication hereof, it is the intention of the trustees or liquidators, as the case may be, of the sequestrated estates or companies being wound up mentioned below, to apply to the respective Masters for an extension of time, as specified below, within which to lodge liquidation accounts and plans of distribution or contribution.

The particulars are given in the following order: Number of estate/company; name and description of estate/company; name and date of appointment of trustee or liquidator; date when account due; period of extension required and to which Master application will be made.

E78/79—FERREIRA, Henri Wehmeyer; Basil Kenneth Spengler van Zyl, and Albert Jacobus Odendaal, 11/9/79. 11/8/80. Six months, Grahamstown.

N75/71—IYAPPA, 306 Noor Chambers, 208 Grey Street, Durban; M. J. Ensor, 17/6/71. 17/8/80. Two months, Pietermaritzburg.

N130/68—RAMAUTHAR, Haripersadh, a dealer in fruit and vegetables, Stall 207, Squatter's Market, Warwick Avenue, Durban, Natal; J. A. Bruce, 3/1/69. 16/8/80. Six months, Pietermaritzburg.

N634/77—FROLICH, Arne Gunnar, 106a Springfield Road, Durban; J. A. Bruce, 24/4/80. 17/8/80. Six months, Pietermaritzburg.

C468/79—HAASBROEK, G. J. D.; P. D. Kruger. 22/8/80. Six months, Cape Town.

N190/78—ISMAIL, Ayoob, born on 2/12/46; Bodraj Ganpath Singh, 26/6/79. 7/9/80. Six months, Pietermaritzburg.

T2025/77/ASR2/B—SCHEFFER, Hercules Jacobus; John Anthony Deary, 14/11/78. 31/8/80. Six months.

B227/79—LOUW, George Frederick; John Werner Wessels, 12/2/80. 12/8/80. Een maand, Bloemfontein.

N398/79—AKOON, G. H. I.; Ronald John Strydom, 21/12/79. 18/9/80. Six months, Pietermaritzburg.

E147/78/1A—SHEARD, David Reginald, born on 11/6/40, a farmer formerly of Jesse Farm, P.O. Komga; Kenneth Norman Paterson, 20/9/78. 5/6/80. 12 Months, Grahamstown.

C561/78—ANDERSON, Bruce Edmond; M. T. East, 15/12/78. 20/8/80. Six months, Cape Town.

C424/79—JOHNSON, G. W.; E. D. James, 12/2/80. 19/8/80. Three months.

C218/79—VAN ANTWERPEN, M. J.; E. D. James, 1/8/79. 19/8/80. Six months, Cape Town.

C276/77—ZARTZ, Z.; M. T. East and P. T. C. Thorne, 28/7/77. 17/8/80. Six months.

C355/76—STASSEN, G. P. E.; M. T. East, M. P. K. Johnson and D. J. Rennie, 6/12/76. 17/8/80. Six months.

C224/78—NARKER, A. M. C.; H. L. Klaff and S. Gutman, 6/2/79. 6/8/80. Six months, Cape Town.

C229/78—RAWAT, A.; H. L. Klaff and S. Gutman, 5/2/79. 5/8/80. Six months, Cape Town.

C304/79—PARKER, M. S.; Joseph J. Fourie, 17/7/79. 6/8/80. Six months, Cape Town.

B216/79—NEGRINI, Stephanus Johannes, 'n ontsetter, woonagtig te Dalmeidastraat 50, Welkom; Roelof Davel du Plessis, 29/1/80. 29/7/80. Twaalf maande (een jaar).

T1083/79/ASR—NIEWOUDT, A. M. J.; Hendrik Jacobus Moller, 24/12/79. 24/6/80. Drie maande.

T1965/77—DUOLOGUE (PTY) Ltd, in liquidation; R. J. Bailey, 3/3/78. 16/8/80. Six months, Pretoria.

T1177/79—DU PLESSIS, M.; 9/10/79. 16/7/80. Six months, Pretoria.

T55/80—FRONEMAN, H. G.; L. Klopper, 14/3/80. 14/9/80. Ses maande, Pretoria.

T1610/79—ELOFF, P. A.; L. Klopper, 15/2/80. 15/8/80. Ses maande, Pretoria.

T1903/78—ALEXIOU, J.; P. A. Cronje, 17/5/79. 17/7/80. Six months, Pretoria.

T1335/79—LILLIE, W. S. G.; P. A. Cronje, 6/3/80. 6/9/80. Six months, Pretoria.

T1483/79—NEZAR, C. H. W.; A. J. Hessels, 8/1/80. 8/9/80. Drie maande, Pretoria.

T1266/79—McCRACKEN, P. E. R.; A. J. Hessels, 25/1/80. 25/7/80. Drie maande, Pretoria.

T1536/78—SWANEPOEL, P. A.; A. J. Hessels, 14/11/78. 16/5/80. Six months, Pretoria.

T48/78—RAS, J. C.; A. J. Hessels, 31/3/78. 7/2/80. Six months, Pretoria.

T1569/79—HORAK, J. de V.; A. J. Hessels, 22/1/80. 22/7/80 Six months, Pretoria.

T1527/79—LE ROUX, M. J.; A. J. Hessels, 29/2/80. 29/8/80. Two months, Pretoria.

T237/79—LE ROUX, W. H. H.; A. J. Hessels, 2/3/79. 18/7/80. Three months, Pretoria.

E176/79—TESSENDORF, Raymond Ernest; Michael Leo de Villiers, 26/2/80. 26/8/80. Three months, Grahamstown.

T1797/76—BARKHUIZEN, J. N. J.; I. J. Oxlee and B. G. S. de Wet, 2/12/76. Third account, 28/2/80. One year.

N178/79B—DICKS, B. K.; W. A. McFarlane, 28/8/79. 23/8/80. Six months, Pietermaritzburg.

N178/79C—SALMOND, B. P.; W. A. McFarlane, 28/8/79 23/8/80. Six months, Pietermaritzburg.

B39/78—JORDAAN, N. J. G.; J. J. du Plooy, 9/8/79. 9/2/80. 15 maande, Bloemfontein.

T1324/78—EXPRESS TYRE SOLDIER'S WAY (PTY) LTD; S. I. Perling, 16/11/78. 31/8/80. Two months, Pretoria.

Koop Nasionale Spaarsertifikate

Buy National Savings Certificates

Vorm/Form 4

LIKWIDASIE-, DISTRIBUSIE- OF KONTRIBUSIEREKENINGS IN GESEKWESTREERDE BOEDELS OF MAATSKAPPYE IN LIKWIDASIE

Ingevolge artikel 108 (2) van die Insolvensiewet, 1936, artikel 136 (2) van die Maatskappywet, 1926, en artikel 406 (3) van die Maatskappywet, 1973, word hierby kennis gegee dat die likwidasie-, distribusie- of kontribusierekenings in die boedels of die maatskappye, na gelang van die geval hieronder vermeld, ter insae van skuldeisers of kontribuante sal lê op die kantore van die Meesters en Landdroste daarin genoem, gedurende 'n tydperk van 14 dae, of die tydperk wat daarin vermeld is, vanaf die datum hieronder vermeld of vanaf die datum van publikasie hiervan, watter datum ook al die laaste is.

Die besonderhede word verstrek in die volgorde: Nommer van boedel/maatskappy; naam en beskrywing van boedel/maatskappy; beskrywing van rekening; rekening ter insae by Meester- en Landdroskantoor, datum (indien later as publikasiedatum), tydperk (indien langer as 14 dae).

LIQUIDATION ACCOUNTS AND PLANS OF DISTRIBUTION OR CONTRIBUTION IN SEQUESTRATED ESTATES OR COMPANIES BEING WOUND UP

Pursuant to section 108 (2) of the Insolvency Act, 1936, section 136 (2) of the Companies Act, 1926, and section 406 (3) of the Companies Act, 1973, notice is hereby given that the liquidation account and plans of distribution or contribution in the estates or the companies mentioned below will lie open for inspection by creditors or contributories at the offices of the Masters and the Magistrates stated therein, for a period of 14 days, or for such a period as stated therein, from the date mentioned below or from the date of publication hereof, whichever may be the later date.

The particulars are given in the following order: Number of estate/company; name and description of estate/company; description of account; account for inspection at Master's and Magistrate's Office, date (if later than date of publication hereof), period (if longer than 14 days).

B27/78A—DU PLOOY, R., voorheen handeldrywende as Madelon en The Green Door, Parys. Vierde en Finale Likwidasie en Distribusie. Bloemfontein, Parys.

T1446/79—REGNEV INVESTMENTS (PTY) LTD. Liquidation and Distribution. Pretoria.

C27/76—RIBCON CONSTRUCTION (PTY) LTD, in liquidation. First and Final Supplementary Liquidation and Distribution. Cape Town, Johannesburg.

C300/79/3B—COAST LINES AFRICA (PTY) LTD, in voluntary liquidation. First and Final Liquidation, Distribution and Return of Contribution. Cape Town.

C109/79/5B—CASSIEM, Yunus. First and Final Liquidation and Contribution. Cape Town.

C38/79—TREDOUX, J. C. First and Final Liquidation and Distribution. Wolsley, Cape Town.

C321/78—HEIDELBERG HANDELAARS (PTY) LTD. Second and Final Liquidation and Distribution. Heidelberg, Cape Town.

B27/1979—SWANEPOEL, Jan Beyers. Aanvullende Eerste en Finale Likwidasie en Distribusie. Bloemfontein.

N48/78—CRAIGIEBYRES (TRENTSIDE) (PTY) LTD, in liquidation. Second and Final Liquidation and Distribution. Pietermaritzburg, Mooi River.

E3/72/19—W H GAZE INVESTMENTS COMPANY S A (PTY) LTD, in liquidation. Supplementary Liquidation and Distribution. Grahamstown, Port Elizabeth.

E15/72/1—W H GAZE PROPERTY COMPANY (PTY) LTD, in liquidation. Supplementary Liquidation and Distribution. Grahamstown, Port Elizabeth.

E161/79—DOUBELL, Peter Raymond (Robert). First and Final Liquidation and Contribution. Grahamstown, Port Elizabeth.

E146/79—SHER'S DRY CLEANERS (PTY) LTD, in liquidation. First Liquidation and Distribution. Grahamstown, Port Elizabeth.

E159/77/3—SCHEUN, Johannes. Third and Final Liquidation and Distribution. Grahamstown, Uitenhage.

E153/79—BOB SALTON (PTY) LTD, in liquidation. First Liquidation and Distribution. Grahamstown, Port Elizabeth.

E151/79—LEE, George Henry. First and Final Liquidation and Distribution. Grahamstown, Port Elizabeth.

T424/79—NEL, T. C. Eerste en Finale Likwidasie en Kontribusie. Pretoria, Witbank.

3133/77—VAN EEDEN, Louisa Carolina, born Meyer on 17/9/29, Identity Number 290927003500, died on 8/12/76. First and Final Liquidation and Plan of Distribution. Pretoria, Springs.

N266/79—BURGER, P. A. Z. Eerste en Finale Likwidasie en Distribusie. Pietermaritzburg, Utrecht.

C210/74—POP-INN TAKEAWAY FOOD (PTY) LTD, in liquidation. Redrawn First and Final Liquidation. Cape Town, Bellville.

T1378/78—SOUTH AFRICAN METAL FUTURES (PTY) LTD, in voluntary liquidation. Final Liquidation.

T962/78—SATTOP (PTY) LTD, in liquidation. Second and Final Liquidation and Distribution. Pretoria.

E162/77/2—CLAASSENS ESTATE AGENCY (PTY) LTD, in liquidation, formerly trading as Constantia Estates. Third Liquidation and Distribution. Grahamstown, Port Elizabeth.

E31/78/1A—P. ABEL SON & NEPHEW (PTY) LTD, in liquidation, with registered office at c/o Panarot Bros & Co., First Floor, Havilland House, Havelock Street, Port Elizabeth, and carrying on business as hoteliers under the name and style of Hotel Windor, Jetty Street, Port Elizabeth. Fourth Liquidation and Distribution. Grahamstown, Port Elizabeth.

T1070/79—OOSTHUIZEN, Jan Daniel Cronje, tydens sekwestrasie 'n boer van Groblersdal, en getroud buite gemeenskap van goedere met Maria Elizabeth Oosthuizen, gebore Klopper. Eerste en Finale Likwidasie en Distribusie, Pretoria, Groblersdal.

B68/79—HAASBROEK, Jozua Francois. Eerste en Finale Likwidasie en Distribusie. Bloemfontein, Petrusburg.

N117A/79/4B—COOKE, G. B. and E. A., building contractors. First and Final Liquidation and Distribution. Pietermaritzburg, Durban.

N267/78—BOSCOMBE, D. First and Final Liquidation and Contribution. Pietermaritzburg, Durban.

N431/76—PARSONS, NEL & BOTHA (PTY) LTD, in liquidation. Supplementary Second and Final Liquidation and Distribution. Pietermaritzburg, Durban.

B231/79—HAMMAN, Cornelis Josephus Salomon, 'n Blanke man van Kroonstad. Eerste en Finale Likwidasie en Distribusie. Bloemfontein, Kroonstad.

T851/79—BRYAN, Anthony Bernard. First Liquidation and Distribution. Pretoria, Johannesburg.

B64/76—SPECIALISED BLASTING SERVICES (EDMS.) BPK., handeldrywende te Lubbestraat 25, Bloemfontein. Eerste en Finale Likwidasie en Distribusie. Bloemfontein, Welkom.

K53/77—DU PLESSIS, Albertus Hendrik Adriaan. Eerste en Finale Likwidasie en Distribusie. Kimberley.

C667/78—JACOBINE INVESTMENTS (PTY) LTD, in liquidation. First and Final Liquidation, Distribution and Contribution. Cape Town.

E24/71/2—WESSELS, Johannes Jacobus. Supplementary Liquidation and Distribution. Grahamstown, Molteno.

127/78/B—LOMBARD, L. S. Eerste en Finale Likwidasie en Distribusie. Bloemfontein.

N128/79/4A—ARNDANE (PTY) LTD, in liquidation. First Liquidation and Distribution. Pietermaritzburg.

B88/79/B—OOSTHUIZEN, Ockert Johan. Eerste Likwidasie en Distribusie. Bloemfontein.

T1951/76—LUCY'S HOLDINGS LTD, in liquidation. Fifth Liquidation and Distribution. Pretoria, Johannesburg.

T624/79—SUPER CHEMICALS (PTY) LTD, in liquidation. First Liquidation and Distributon. Pretoria, Johannesburg.

T2032/78/A—ALBERTON BOUSTAAL INGENEURS-WERKE (PTY) LTD. First Liquidation and Distribution. Pretoria, Alberton.

T956/79—PARSON, R. H. Eerste en Finale Likwidasie en Kontribusie. Pretoria, Rustenburg.

T253/79—DIEDERICKS, A. B. J. Eerste en Finale Likwidasie en Distribusie. Pretoria, Brits.

T178/78—MILLER, M. A. H. Eerste en Finale Likwidasie en Kontribusie. Pretoria, Roodepoort.

C649/77—PARADISE INVESTMENTS CO. (PTY) LTD, in liquidation. Third Liquidation and Distribution. Cape Town.

C183/79—ARTIZ CONSTRUCTION (PTY) LTD, in liquidation. First Liquidation and Distribution. Cape Town.

T1777/78—SERFONTEIN, J. H. Eerste en Finale Likwidasie en Distribusie. Pretoria, Swartruggens.

N507B/77—CHETTY, Gevindsamy Ramsamy, 16 Ann Street, Dundee, Natal. Trustee's Second Liquidation and Distribution. Pietermaritzburg, Dundee.

C31/80—MIRANNEVE INVESTMENTS (PTY) LTD, in voluntary liquidation. First and Final Liquidation and Distribution. Cape Town.

N197/77—VOYSEY BOND & COMPANY (CAPE) (PTY) LTD, in liquidation. Fifth Liquidation and Distribution. Pietermaritzburg, Cape Town and Durban.

N339/77/2A—REDDY, A. First Liquidation and Distribution. Pietermaritzburg, Durban.

N91/79—TRAFALGAR CORNER (PTY) LTD, in liquidation. Second an Final Liquidation and Distribution. Pietermaritzburg, Durban.

B83/79—VAN DAMME, Cornelis Hendricus. Eerste en Finale Likwidasie en Distribusie. Bloemfontein.

C39/79—MENOLAW NOMINEES (PTY) LTD, in voluntary liquidation. First and Final Liquidation and Distribution. Cape Town.

N473/78—PILLAY, Radhakrishnan Rajagopaul. First and Final Liquidation and Plan of Distribution. Pietermaritzburg, Durban.

T1251/79—COMPUTER BROKING SERVICES (PTY) LTD, in voluntary liquidation. First and Final Liquidation and Distribution. Pretoria, Johannesburg.

T1272/78—PENTEC SERVICES (PTY) LTD. Amended First Liquidation and Distribution. Pretoria, Johannesburg.

T351/80—ANNLIN MOTORS (PTY) LTD, in liquidation. First and Final Liquidation and Distribution. Pretoria.

T205/80—ROBBERG DEVELOPMENT COMPANY (PTY) LTD, in voluntary liquidation. First and Final Liquidation and Distribution. Transvaal Provincial Division.

N12/80—LESARK PROPERTIES (PTY) LTD, in voluntary liquidation. First and Final Liquidation and Distribution. Pietermaritzburg, Durban.

T761/78—VAN DER MERWE, H. J. J. M. Supplementêre Likwidasie en Distribusie. Pretoria, Delmas.

T789/79—VAN DER MERWE, C. Eerste en Finale Likwidasie. Pretoria, Alberton.

T1129/79—HARMSE, H. L. Eerste en Finale Likwidasie en Kontribusie. Pretoria, Leslie.

T1436/79—KIRCHNER, Michiel Heyns. Eerste en Finale Likwidasie en Plan van Kontribusie. Pretoria, Johannesburg.

T679/79—NIGEL WALKER & ASSOCIATES (PTY) LTD, in likwidasie. Eerste en Finale Likwidasie en Plan van Kontribusie. Pretoria, Johannesburg.

T386/78—LES JARVIS ELECTRICS (PTY) LTD, in likwidasie. Eerste Likwidasie en Kontribusie. Pretoria, Johannesburg.

N144/80—MacRITCHIE BROTHERS (PTY) LTD, in voluntary liquidation. First and Final Liquidation and Distribution. Pietermaritzburg, Durban.

C597/77—DANIELS, J. S. C. First and Final Liquidation and Distribution. Cape Town, Paarl.

C267/74—GUBELA & RICHTER (PTY) LTD, in liquidation. First Liquidation and Distribution. Cape Town, Boksburg.

C21/76—NURSERY WHOLESALERS (PTY) LTD, in liquidation. Fifth and Final Liquidation and Distribution. Cape Town.

C21/76—NURSERY WHOLESALERS (PTY) LTD, in liquidation. Fourth Liquidation and Distribution. Cape Town.

C118/72—WALT, S. Third and Final Liquidation and Distribution. Cape Town.

126/79/2—HALSTEAD, Anthony Richard Frederick, who resided at 5 Princess Avenue, Beacon Bay, East London, Identity Number 3100145053007, and who died on 5/1/79 at Swartklip, administered in terms of section 34 of Act 66 of 1965. First Liquidation and Distribution, together with Second and Final Liquidation and Distribution. Grahamstown, East London.

E84/79—RADEMEYER, Esias Michael, an electrician of 36 Devon Road, Kabega Park, Port Elizabeth. First Liquidation and Distribution. Grahamstown, Port Elizabeth.

C407/78—GOLDBERG, Monica. First Liquidation and Distribution. Cape Town.

C87/80—ST FILLINS INVESTMENTS (PTY) LTD. First and Final Liquidation and Distribution. Cape Town.

T898/80—CHEBEMA (EDMS.) BPK., in vrywillige oorgawe. Eerste en Finale Likwidasie en Distribusie. Pretoria.

C253/79—GODLEY, D. E., formerly in partnership, trading as Vuemark Enterprises. First Liquidation and Distribution. Cape Town.

T1477/78—ELMECON (EDMS.) BPK., in likwidasie. Gewysigde Eerste Likwidasie en Distribusie. Pretoria, Witbank.

T1952/76—REDELINGHUYS, J. H. Second and Final Liquidation and Distribution. Pretoria, Springs.

T204/79—COMPALM (PTY) LTD, in liquidation. Second Liquidation and Distribution. Pretoria, Johannesburg.

T1294/79—PORTION 69 OF THE FARM COMMISSIEDRIFT (PTY) LTD, in liquidation. First Liquidation and Distribution. Pretoria, Rustenburg.

T547/79—CRANE INVESTMENTS (PTY) LTD, in voluntary liquidation. Liquidation First and Final. Pretoria, Johannesburg.

T809/79—OLCO PROPERTIES (PE) (PTY) LTD, in liquidation. First and Final Liquidation, Distribution and Contribution. Pretoria, Johannesburg.

T374/80—SUBURBAN CONSTRUCTION (PTY) LTD, in liquidation. First Liquidation and Distribution. Pretoria, Johannesburg.

T872/78—CEROS INVESTMENTS (PTY) LTD. Liquidation. Pretoria, Johannesburg.

T481/79—COMBINED INVESTMENTS (PTY) LTD. Voluntary winding up. First and Final Liquidation and Distribution. Pretoria, Johannesburg.

T713/79—OTTO LANDSBERG HOLDINGS (PTY) LTD, in liquidation. First Liquidation and Distribution. Pretoria, Johannesburg.

T733/79—VENDING DISTRIBUTORS (PTY) LTD, in members' voluntary liquidation. First and Final Liquidation and Distribution. Pretoria, Johannesburg.

T2070/77—INDUSTRIAL VALUERS (PTY) LTD. Amended First and Final Liquidation and Distribution. Pretoria, Johannesburg.

T952/76—MECHPLANT (TVL) (EDMS.) BPK. Tweede en Finale Likwidasie en Distribusie. Pretoria, Johannesburg.

N447A/76—GEORGOPOULOS, C. & J. Giannakopolous, trading as Elite Supermarket. Third and Final Liquidation and Distribution. Pietermaritzburg, Newcastle.

T453/77—C.F.E. BELEGGINGS (PTY) LTD, in liquidation. Third and Final Liquidation and Distribution. Pretoria.

N289/79—VAN DEN HEUVEL, L. A. First and Final Liquidation and Contribution. Pietermaritzburg, Durban.

N406/78—NZIMBI AUTOMOTIVE SERVICES (PTY) LTD, in liquidation. Second Liquidation and Distribution. Pietermaritzburg, Empangeni.

T2012/78—GROENEWALD, L. A. J. First and Final Liqudation and Distribution. Pretoria, Witbank.

T434/78—MILLMAN, S. First and Final Liquidation and Distribution. Pretoria, Johannesburg.

T895/78—WOUDA, C. S. P., en eggenote H. C. Swanepoel. Tweede Likwidasie en Distribusie. Pretoria.

T916/79—H W J PROPERTIES (EDMS.) BPK., in likwidasie. Eerste en Finale Likwidasie en Kontribusie. Pretoria, Potchefstroom.

T207/79—DU TOIT, J. C. Gewysigde Eerste en Finale Likwidasie en Distribusie in terme van kompromie. Pretoria, Meyerton.

T49/79—KLEYNHANS, Stephanus Marthinus. Eerste en Finale Likwidasie en Kontribusie. Pretoria.

T1899/78—VAN STADEN, J. Tweede en Finale Likwidasie en Kontribusie. Pretoria, Pietersburg.

T237/78—PETRONIC WHOLESALERS (PTY) LTD, in liquidation. Third Liquidation and Distribution. Pretoria, Johannesburg.

T1585/77—CONRADIE, Josias Hendrik. Tweede en Finale Likwidasie en Verdeling. Pretoria.

T1086/79—WAPENAAR, E. P. Eerste en Finale Likwidasie en Verdeling. Pretoria.

T557/79—INGAGANE SEMENT STENE (EDMS.) BPK., in liquidation. First Liquidation and Distribution. Pretoria, Johannesburg.

T1909/78—J. H. DICKS & KIE. (EDMS.) BPK., in likwidasie. Tweede Likwidasie en Verdeling. Pretoria.

T1018/78—SHABEN ELECTRICAL (PTY) LTD, in liquidation. Second and Final Liquidation and Distribution. Pretoria.

N91/80—SAM'S PROPERTIES (PTY) LTD, members' voluntary winding-up; First and Final Liquidation and Distribution. Pietermaritzburg, Durban.

Vorm/Form 5

UITKEER VAN DIVIDENDE EN INSAMELING VAN KONTRIBUSIES IN GESEKWESTREERDE BOEDELS OF MAATSKAPPYE IN LIKWIDASIE

Nademaal die likwidasierekenings en distribusie- of kontribusierekenings in die gesekwestreerde boedels of maatskappye in likwidasie, na gelang van die geval, hieronder vermeld op die datums daarin vermeld, bekragtig is, word hierby ingevolge artikel 113 (1) van die Insolvensiewet, 1936, artikel 139 (2) van die Maatskappywet, 1926, en artikel 409 (2) van die Maatskappywet, 1973, kennis gegee dat uitbetaling van dividende of insameling van kontribusies aan die gang is in genoemde boedels of maatskappye soos hieronder uiteengesit en dat elke kontribusiepligtige skuldeiser die bedrag deur hom verskuldig by die adres hieronder genoem aan die kurator of likwidateur moet betaal.

Die besonderhede word verstrek in die volgorde: Nommer van boedel/maatskappy; naam en beskrywing van boedel/maatskappy; datum waarop rekening bekragtig is; of 'n dividend uitgekeer of 'n kontribusie ingevorder word, of beide, en naam en adres van kurator of likwidateur.

PAYMENT OF DIVIDENDS AND COLLECTION OF CONTRIBUTIONS IN SEQUESTRATED ESTATES OR COMPANIES BEING WOUND UP

The liquidation accounts and plans of distribution or contribution in the sequestrated estates or companies being wound up, as the case may be, mentioned below having been confirmed on the date therein mentioned, notice is hereby given, pursuant to section 113 (1) of the Insolvency Act, 1936, section 139 (2) of the Companies Act, 1926, and section 409 (2) of the Companies Act, 1973, that dividends are in the course of payment or contributions are in the course of collection in the said estates or companies as set forth below and that every creditor liable to contribution is required to pay to the trustee or liquidator the amount for which he is liable at the address mentioned below.

The particulars are given in the following order: Number of estate/company; name and description of estate/company; date when account confirmed; whether a dividend is being paid or contribution being collected, or both, and name and address of trustee or liquidator.

N14/79—MEYER, Yssel. 12/8/80. Dividend to secured creditors only. W. Hancke, c/o Sanek Board of Executors Ltd, P.O. Box 3569, Durban, 4000.

T19/80—SUPREME INVESTMENTS (Pty) Ltd, 13/8/80. Dividends being paid. Z. Goldblatt, Charter House, 179 Bosman Street, Pretoria.

T1767/78—WESTVAAL LAUNDERERS & DRY CLEANERS (PTY) LTD, in liquidation. 18/8/80. Dividends being paid. D. A. Kahan, P.O. Box 2142, Pretoria, 0001.

T1482/78—SWANEPOEL, David Jacobus. 14/8/80. Dividends being paid. D. A. Kahan, P.O. Box 2142, Pretoria, 0001.

T1092/79—EVANS, John Andrew James. 14/8/80. Dividend to preferent and secured creditors. Mervyn Israel Swartz, c/o Albert Ruskin Trust Board (Pty) Ltd, P.O. Box 7976, Johannesburg.

T1661/78—HUDSON, Robert John Rodney. 13/8/80. Both. Mervyn Israel Swartz, c/o Albert Ruskin Trust Board (Pty) Ltd, P.O. Box 7976, Johannesburg.

T1005/80—IVORLESCH INVESTMENTS (PTY) LTD, in liquidation. 13/8/80. Dividend to a preferent and secured creditor. Philip David Berman, c/o Albert Ruskin Trust Board (Pty) Ltd, P.O. Box 7976, Johannesburg.

T929/79—HANITO BELEGGINGS (EDMS.) BPK., in likwidasie. 13/8/80. Dividende uitgekeer. Leon Marx, 10de Verdieping, Ou Mutualgebou, Andriesstraat, Pretoria.

E27/79/1B—ARCHBRIGHT INVESTMENTS (PTY) LTD. 8/8/80. L. W. de V. Schärges, c/o Markmans, President Centre, 562 Main Street, Port Elizabeth.

N207/79—BADEN PROPERTIES (PTY) LTD, in liquidation. 12/8/80. Dividend paid. Donald Rae Adams, P.O. Box 2322, Durban, 4000.

N122/78—BUDHU, B., formerly trading as Dicks Auto Spares, Mooi River. 14/8/80. Dividend being paid. D. V. Holmes, P.O. Box 493, Pietermaritzburg.

B153/79/B—CHRISNA'S BOUTIQUE (EDMS.) BPK. 28/7/80. Dividende uitgekeer. Breytenbach en Van der Merwe.

N324/79—RAPID TYRE RETREADING COMPANY (PTY) LTD. 4/8/80. Award to secured and preferent creditors and Dividends payable to concurrent creditors. M. J. Ensor, c/o Security Executor and Trust Company Ltd, P.O. Box 1050, Durban, 4000.

N14/78/2A—BOB FORSDICK CONSTRUCTION (PTY) LTD. 6/8/80. Dividend payable. F. D. Muller, c/o Security Executor and Trust Company Ltd, P.O. Box 1050, Durban.

N195/77—BOSMAN, Barry Noel, residing at 32 Russel Street, Durban. 4/8/80. Dividend payable. J. A. Bruce, c/o Security Executor and Trust Company Ltd, P.O. Box 1050, Durban, 4000.

C266/78/6A—TALISMAN PRODUCTS (PTY) LTD, in liquidation. 12/8/80 Dividends being paid. Pieter Johannes Albertus Fourie, c/o The Board of Executors (Pty) Ltd, Sixth Floor, Norwich Union Buildings, Vermeulen Street, Pretoria, 0002.

C443/76/3A—ANGWA INVESTMENTS (PTY) LTD, in liquidation. 6/8/80. Dividends being paid. Eugene Bryan Wallace, c/o The Board of Executors Trustees (Pty) Ltd, 19th Floor, Cartwright's Corner House, Adderley Street, Cape Town, 8001 and Rael Gordon, c/o Syfret's Trust Company Ltd, 24 Wale Street, Cape Town, 8001.

C115/80—J. A. HUMAN & SONS (PTY) LTD, in vrywillige likwidasie. 7/8/80. Verdeling gemaak aan lede, E. A. Hartwig, Breestraat 71, Kaapstad.

C119/80—L. PITT (PTY) LTD, in vrywillige likwidasie. 7/8/80. Verdeling gemaak aan lede. E. A. Hartwig, Breestraat 71, Kaapstad.

C735/78—MOSTERT, C. R. B. 4/8/80. Dividend being paid. J. J. Rousseau, c/o Cape Trustees Ltd, 6 Church Square, Cape Town.

5435/77—RAINS, Dennis Kenneth. 4/8/80. Dividends being paid. Pollack and Brasg, Attorneys for Executor, 21st Floor, Kine Centre, Commissioner and Kruis Streets, Johannesburg.

E186/78/2—ALGOA TRACTORS (PTY) LTD, in liquidation. 4/8/80. Dividend being paid. Basil Kenneth Spengler van Zyl, c/o Syfrets Trust and Executor S.A. Ltd, 94 Main Street, Port Elizabeth.

B177/79—PIENAAR, Petrus Johannes, snr., tydens sekwestrasie woonagtig te Oribistraat 19, Doorn, Welkom, en getroud binne gemeenskap van goed met Helena Maria Pienaar. 12/8/80. Dividende word uitbetaal. Charl Jacob Venter, Posbus 153, Bloemfontein.

E58/71/2A—VAN DER MERWE, Gert Johannes Petrus Johannes, a salesman who resided at 9 Springbok Street, Despatch, District of Uitenhage. 5/8/80. Concurrent award being paid. Kenneth Norman Paterson, Ninth Floor, Trust Centre, North Street, P.O. Box 963, East London.

B37/78—DENPAS CONSTRUCTION (PTY) LTD, in likwidasie; Eerste en Finale Likwidasie en Distribusierekening. 4/8/80. Dividende word aan die skuldeisers betaal. G. F. Wessels, Posbus 760, Bloemfontein en H. J. F. Steyn, Posbus 819, Bloemfontein.

E68/79—RADEMEYERS ELECTRIC MIDDELBURG (PTY) LTD, in liquidation, with registered office at Fourth Floor, Saambou National Buildings, 520 Main Street, Port Elizabeth. 8/8/80. Preferent and concurrent creditors are being paid dividends herein. Kenneth Norman Paterson, Ninth Floor, Trust Centre, North Street, East London.

C579/78—MASTER HOMES LTD, in liquidation. 12/8/80. Dividend being paid. F. D. Glaum, c/o Cape Trustees Ltd, 6 Church Square, Cape Town, 8001.

C26/76—SURGEONER, Derrick. 12/8/80. Dividend being paid. R. Gordon, c/o J. D. du Plooy, 24 Wale Street, Cape Town.

E49/79/A—CONTINENTAL MARINE (PTY) LTD, in liquidation. 4/8/80. Dividend being paid. Basil Kenneth Spengler van Zyl and Lawrence Phillip Kraitzick, c/o Syfrets Trust and Executor S.A. Ltd, 94 Main Street, Port Elizabeth.

N57/79—SIMPRAX CLOTHING MANUFACTURERS (PTY) LTD. 1/8/80. Dividend being paid. Alistair Duncan Beattie, 98 St George's Street, Durban, 4001.

E121/78/1A—JOUBERT, Gideon Jacobus, formerly a general dealer trading as Sokevind Hardware, Van Riebeek Street, Steynsburg. 8/8/80. Concurrent awards being paid. Kenneth Norman Paterson, Ninth Floor, Trust Centre, North Street, P.O. Box 963, East London.

T672/78—LUDWICK, V. 1/8/80. Dividend. D. J. Strauss, c/o Nortrustees (Pty) Ltd, P.O. Box 62016, Marshalltown, 2107.

T1933/76—STUBBS, T. H. A. E. 5/8/80. Dividend. P. D. Alexander, c/o Nortrustees (Pty) Ltd, P.O. Box 62016, Marshalltown, 2107.

K17/79—COETZEE, Stephanus Adriaan, handeldrywende as Visco Engineering. 11/8/80. Dividende aan voorkeur eisers word betaal. G. J. Carr, Posbus 6, Upington.

C189/79/6B—BELLVILLE NEEDLEWORK DISTRIBUTORS (PTY) LTD, in liquidation. 30/7/80. Concurrent contribution. B. W. Smith, c/o Kilpin Trust (Pty) Ltd, P.O. Box 4205, Cape Town, 8000.

T626/79—B-CON MOTOR ENGINEERING (EDMS.) BPK. 4/8/80. Dividende P. J. E. Meintjes, Posbus 3425, Johannesburg.

C311/75—TRONNEES FINANSIERING BPK., in liquidation. 4/8/80. Dividend being paid. R. Millman and J. J. Fourie, Cape Trustees Ltd, 6 Church Square, Cape Town, 8001.

N138/79—VAN ZYL, C. B. 5/8/80. Dividend being paid. W. A. McFarlane, c/o Syfrets Trust and Executor S.A. Ltd, P.O. Box 135, Durban, 4000.

N402/77—JOHNNY, William. 5/8/80. Dividend being paid. C. G. Foot, c/o Syfrets Trust and Executor S.A. Ltd, P.O. Box 135, Durban, 4000.

N230/79 — HAMMARSDALE ENGINEERING (PTY) LTD, in liquidation. 12/8/80. Dividends being paid. C. E. Douglas, P.O. Box 4743, Durban, 4000.

N2/78—VOYSEY BOND PROPERTY INVESTMENTS LTD, in liquidation. 12/8/80. Dividend has been paid. J. L. Castleden, P.O. Box 2806, Durban, 4000.

C152/78—SALVRED (EDMS.) BPK. 13/8/80. Dividend. J. J. Matthee.

C171/77—SYSTEMS DISTRIBUTORS S.A. (PTY) LTD, in liquidation. 16/7/80. Dividend being paid. First Liquidation and Distribution. H. Zinman, c/o Syfrets Trust Co. Ltd, 24 Wale Street, Cape Town, 8001.

C112/80—GEO H. ROGERS FUNERAL FUND (PTY) LTD, in vrywillige likwidasie. 14/8/80. Verdeling gemaak aan lede. E. A. Hartwig, Breëstraat 71, Kaapstad.

E99/79/A—DE WET, Johannes Mathinus, formerly carrying on business under the style of Boet de Wet Motors, 317 Kempston Road, Port Elizabeth, and presently residing at 4 Kya Vale, Cotswold, Port Elizabeth. 11/8/80. No dividend. S. H. Levin and L. P. Kraitzick, for Cape Trustees (EP) (Pty) Ltd, AA House, 4 Rink Street, Port Elizabeth, 6001.

T541/76—VOGUE DISTRIBUTING CO. (PTY) LTD, in likwidasie. 5/8/80. Kontribusie gevorder. B. G. S. de Wet, p/a Kaap-Vaal Trust (Edms.) Bpk., Posbus 2851, Johannesburg, 2000.

T1592/78—CORNELIUS, C. F. 7/7/80. Kontribusie gevorder. J. R. Galloway, p/a Kaap-Vaal Trust (Edms.) Bpk., Posbus 2851, Johannesburg.

T521/79—BOSHOFF, S. J. 5/8/80. Kontribusie gevorder. J. R. Galloway, p/a Kaap-Vaal Trust (Edms.) Bpk., Posbus 2851, Johannesburg, 2000.

T1300/78—ROOS, C. J. 8/8/80. Dividend uitgekeer. B. G. S. de Wet, p/a Kaap-Vaal Trust (Edms.) Bpk., Posbus 2851, Johannesburg.

C472/76—DE WAAL KEET, Nigrini. 15/8/80. Dividende word uitgekeer. P. G. van Velden en J. M. Grant, Donkinstraat 36, Beaufort-Wes.

55/1140—EIKEDAL INVESTMENTS (PTY) LTD, in likwidasie. 11/8/80. Dividend word uitgekeer. Josua Francois Malherbe, p/a Jan S. de Villiers & Seun, Santamgebou, Burestraat, Kaapstad.

E80/74/3A—BUTLER CONSTRUCTION (PTY) LTD, in liquidation, with registered office at United Buildings, Cathcart Road, Queenstown. 11/8/80. Judicial management creditor being paid. Kenneth Norman Paterson, Ninth Floor, Trust Bank Centre, North Street, East London.

E171/72/1—TROW, Dennis James, 22 Larenzo Avenue, Rosemont, East London, formerly trading as T.N.T. Construction. 14/8/80. Administration expenses being paid. Kenneth Norman Paterson, Ninth Floor, Trust Bank Centre, North Street, East London.

E74/79/2—KASUKA (PTY) LTD, in liquidation, formerly trading as Crave Store, Black Road, near Mdantsane, East London, with registered address at 15 St Matthews Road, East London. 14/8/80. Secured, preferent and concurrent awards being paid. Kenneth Norman Paterson, Ninth Floor, Trust Centre, North Street, East London.

T344/79—VENTURA MINING SUPPLIES (EDMS.) BPK. 18/8/80. Preferent dividend. A. S. P. Meyer, p/a A. S. P. Meyer Trust, Posbus 3639, Pretoria.

T1451/79—PRINSLOO, M. C. 13/8/80. Dividende en kontribusie. A. S. P. Meyer, p/a A. S. P. Meyer Trust, Posbus 3639, Pretoria.

T1589/77—LOTTER, Paul Machiel. 16/7/80. Kontribusie word ingevorder. Robbie Schilz, Posbus 676, Pretoria, 0001.

T1324/78—EXPRESS TYRE SOLDIER'S WAY (PTY) LTD, in liquidation. 12/8/80. Dividend being paid. S. I. Perling, c/o Schafter Hyman Spain, P.O. Box 752, Durban, 4000.

C202/80—SUMMER VINE INVESTMENTS (PTY) LTD, in voluntary liquidation. 13/8/80. Contribution from member. Montagu Philip Plant, 601 86 St George's Street, Cape Town, 8001.

C200/80—SUNNY VINEYARD INVESTMENTS (PTY) LTD in voluntary liquidation. 6/8/80. Contribution from member. Montagu Philip Plant, 601 86 St George's Street, Cape Town, 8001.

C21/76—NURSERY WHOLESALERS (PTY) LTD, in liquidation, Third Liquidation and Distribution Account. 8/8/80. Dividend being paid. D. J. Rennie, c/o Syfrets Trust Co. Ltd, 24 Wale Street, Cape Town, 8001.

T545/79—DENDAR, G. H. I. 25/7/80. Dividend payable. G. H. J. Venter, P.O. Box 1474, Johannesburg.

T412/78—TIKLY, I. 31/7/80. Dividend payable. G. H. J. Venter, P.O. Box 1474, Johannesburg.

N11/80—A. F. STEWART (PTY) LTD, in voluntary liquidation. 11/8/80. Dividend being paid. M. F. Niven, 813 Permanent Buildings, Smith Street, Durban.

T339/79—WEINER, H. 13/8/80. Contribution being levied. V. A. van Diggelen, c/o Limvaal Trustees, P.O. Box 3548, Pretoria.

T1472/75—KLEINS INVESTMENTS (P. Y) LTD, in liquidation. 5/8/80. Awards to concurrent creditors only. A. H. Gunn, c/o Metrust Ltd, P.O. Box 61517, Marshalltown.

T1071/78—MONTROSE FARMING (PTY) LTD, in liquidation. 5/8/80. Awards to shareholders. A. H. Gunn and J. R. R. Wells, c/o Metrust Ltd, P.O. Box 61517, Marshalltown.

T1072/78—BALLITO INVESTMENTS (PTY) LTD, in liquidation. 12/8/80. Awards to shareholders. A. H. Gunn and J. R. R. Wells, c/o Metrust Ltd, P.O. Box 61517, Marshalltown.

T805/77—GAME BREEDERS SUPPLIERS (PTY) LTD, in liquidation. 1/8/80. Contribution to concurrent creditors. A. H. Gunn, c/o Metrust Ltd, P.O. Box 61517, Marshalltown.

T1020/79—K. & M. ENTERPRISES (PTY) LTD, in liquidation. 7/8/80. A dividend is payable to shareholders. D. A. Nathan, P.O. Box 6610, Johannesburg, 2000.

T1479/9—MAZURI INVESTMENTS (PTY) LTD, in voluntary liquidation. 13/8/80. Dividend being paid. M. E. J. Reid, 11th Floor, Argon House, 87 Jutta Street, Braamfontein, Johannesburg.

T1455/78—RAND ALUMINIUM (PTY) LTD, in liquidation. 11/8/80. Dividend being paid. C. R. Lansdown, c/o Syfrets Trustees (Tvl) Ltd, P.O. Box 61058, Marshalltown, 2107.

T1455/78—RAND ALUMINIUM (PTY) LTD, in liquidation. 11/8/80. Dividends being paid. C. R. Lansdown, c/o Syfrets Trustees (Tvl) Ltd, P.O. Box 61058, Marshalltown, 2107.

T1690/78—TYRONE ELECTRICAL CONTRACTORS (PTY) LTD. 18/8/80. Dividend. P. J. E. Meintjes, P.O. Box 3425, Johannesburg, 2000.

T143/79—DU PLESSIS, F. L. 18/8/80. Dividends payable. B. T. Whitson, c/o Syfrets Trust, P.O. Box 1830, Pretoria, 0001.

T780/79—VERWEY, T. J. J. 15/8/80. Dividends payable. B. T. Whitson, c/o Syfrets Trust, P.O. Box 1830, Pretoria, 0001.

N165/79—ROTARY PRINTERS (PTY) LTD, in liquidation. 11/8/80. Dividend. K. D. Krumm, c/o Sable Trustees, P.O. Box 4478, Durban, 4000.

K52/77—VAN DER MERWE, Jacobus Lucas Marthinus, 'n boer van Perseel 4 L 15, Magogong. 30/7/80. Dividende is betaal. D. J. Cilliers, p/a Lubbe Cilliers & Van Tonder, Posbus 12, Hartswater.

T306/79—COAL FIELDS ELECTRICAL (PTY) LTD, in liquidation. 14/8/80. Contribution is being levied. M. D. Blaha, c/o Desolaat (Pty) Ltd, P.O. Box 2109, Pretoria.

T971/77—ALCOR PLANT HIRE (EDMS.) BPK., in likwidasie. 13/8/80. Dividend betaalbaar. L. Klopper, Posbus 1990, Pretoria, 0001.

T1872/78—WAVERNESS HOLDINGS (EDMS.) BPK., in likwidasie. 13/8/80. Verseker.e dividend en kontribusie. L. Klopper, Posbus 1990, Pretoria, 0001.

T2050/77—MASON, T. W. 11/8/80. Dividend paid. A. J. Hessels, c/o Security Executor and Trust Co. Ltd, P.O. Box 3127, Pretoria.

T967/79—BREYTENBACH, H. J. 14/8/80. Dividend paid. A. J. Hessels, c/o Security Executor and Trust Co. Ltd, P.O. Box 3127, Pretoria.

T1774/77—BOYES, Alfred George. 11/8/80. Dividend paid. A. J. Hessels, c/o Security Executor and Trust Co. Ltd, P.O. Box 3127, Pretoria.

T1483/75—STRYDOM, P. J. M. 13/8/80. Dividend paid. A. J. Hessels, c/o Security Executor and Trust Co. Ltd, P.O. Box 3127, Pretoria.

T668/79—OPPERMAN, A. S. 16/7/80. Kontribusie ingevorder. A. J. Hessels, p/a Security Eksekuteurs en Trustmaatskappy Bpk., Posbus 3127, Pretoria.

T773/79/B—JORDAAN, J. 6/8/80. Concurrent award. P. A. Cronje.

T1143/79—DUVENHAGE, J. H. 13/8/80. Contribution collected. A. J. Hessels, c/o Security Executor and Trust Co. Ltd, P.O. Box 3127, Pretoria.

T1857/78—LUCAS, J. J D. 22/7/80. Contribution being collected. A. J. Hessels, c/o Security Executor and Trust Co. Ltd, P.O. Box 3127, Pretoria.

T722/79—SPORTSENTRUM VERRE-NOORD (EDMS.) BPK., in liquidation. 13/8/80. Dividend paid. A. J. Hessels, p/a Security Executor and Trust Co. Ltd, P.O. Box 3127, Pretoria.

Vorm/Form 6

AANSOEK OM REHABILITASIE

Ingevolge artikel 124 van die Insolvensiewet, 1936, word hierby kennis gegee dat die insolvente persone hieronder genoem om hul rehabilitasie aansoek sal doen op die datums, tye en plekke en om die redes wat daarin teenoor hulle onderskeie name aangedui is, met aanduiding van nommer van boedel; volle naam en beskrywing van insolvent (met inbegrip van sy geboortedatum en persoonsnommer) en plek van besigheid of woonplek; datum waarop boedel gesekwestreer is, en adres, betrekking of status van insolvent ten tye van daardie datum; afdeling van Hooggeregshof waarby en datum en tyd wanneer aansoek gedoen sal word; rede van aansoek.

APPLICATION FOR REHABILITATION

Pursuant to section 124 of the Insolvency Act, 1936, notice is hereby given that the insolvents mentioned below will apply for their rehabilitation on the dates, at the times and places and upon the grounds as therein set forth opposite their respective names, indicating number of estate; full name and description of insolvent (including his date of birth and identity number) and place of business or residence; date when estate sequestrated, and address, occupation or status of insolvent at the time of that date; division of Supreme Court to which and date and time on which application will be made; ground of application.

T517/75—GAGIANO, Carlo Andreas, 10/11/36, 36111050 26000, werksaam te Koöperatiewe Bemesting- en Strooidienste, Bothaville, woonagtig te Careystraat 43, Bothaville. 20/5/75. Transvaalse Provinsiale, 14/10/80, 10h00. Artikel 124 (2) (b) van Wet 24 van 1936.

T1254/75—VENTER, Josiah Jeremiah, 29/1/34, 3563632750 W. carrying on business and residing at 174 Stegman Street, Lynn East, Pretoria. 30/9/75, Plot 239, Haakdoringboom 444, 10th Avenue, Gezina, as a hydraulic mechanic. Transvaal Provincial, 21/10/80, 10h00. Section 124 (2) (b) of Act 24 of 1936.

PUCKRIN, John William, administration manager of E. Merck S.A. (Pty) Ltd. 16/1/79, employed at Handy Hank, Pinetown, Durban. Witwatersrand Local, 14/10/80, 10h00. Section 119 (7) as read with 124 (1) of the Insolvency Act, No. 24 of 1936, as amended, the Master of the Supreme Court having furnished a certificate pursuant to Section 119 and 124 of the Insolvency Act, 1936.

T510/74—VAN DER MERWE, Pieter Willem Adriaan, 19/10/30, 3010195065004, 1235 Walter Avenue, Waverley, Pretoria. 18/6/74, employed by P. W. A. van der Merwe Plumbers (Pty) Ltd, 1235 Walter Avenue, Waverley, Pretoria. Transvaal Provincial, 14/10/80, 10h00. Elapsing of the statutory time limit in terms of section 124 (29) (A) of Act 24 of 1936, as amended.

414/76—STEYN, Jacobus Johannes, 5/3/38, 3803055005002, verseker ingsverteenwoordiger te Legal and General Volkskas, Annanweg, Carletonville, en woonagtig te Berylstraat 61, Carletonville. 15/10/76, werksaam as 'n verteenwoordiger te Volkskas Makelaars, NBS-gebou, Murchinsonstraat, Ladysmith, Natal, en woonagtig te Princess Margaretstraat 16, Ladysmith, Natal. Natalse Provinsiale, 28/10/80, 10h00. Artikel 124 (2), Wet 24/1936. Rekening bekragtig op 1/5/78.

C266/77—VAN DER MERWE, Gerhard Arnoldus, 4/2/50, 5002045067007, Avondalestraat 51, Oakdale. 7/6/77. Kaapse Provinsiale, 29/10/80, 10h30. Artikel 124 (2) (a) van die Insolvensiewet.

C29/77—VAN ZYL, Johannes Hermanus Christiaan, 31/12/39, 3912315080005, Dutoitstraat 6, Montagu. 11/2/77. Kaapse Provinsiale, 29/10/80, 10h30. Artikel 124 (2) (a) van die Insolvensiewet.

C378/71—WOLMAN, Gerald Anthony, 19/1/27, 3701195 043006, an adult male, employed as an importer/exporter by Transrep Sales (Pty) Ltd. 533 Boston House, Strand Street, Cape Town, and residing at 81 Kloof Road, Bantry Bay, Cape. 8/12/71, resided at 81 Kloof Road, Bantry Bay, Cape, and was a director of Transworld Industrial Corporation (Pty) Ltd, Sanlam Centre, Foreshore, Cape Town, and Uitsig Motors (Pty) Ltd, 32 Voortrekker Road, Goodwood, Cape. Cape of Good Hope Provincial, 17/10/80, 10h30, Section 124 (2) (c) of the Insolvency Act, 1936.

C452/76—MEYER, Petrus Frederick, 12/3/36, 3603125030 005, 'n plaasbestuurder van die plaas Content, distrik Mafeking. 8/10/76, 'n boer en sakeman van die plaas Kykoe, distrik George. Kaapse Provinsiale, 14/10/80. Aansoek word gedoen ingevolge artikel 124 (2) (a).

E58/74—NEL, George, 28/8/38, 3808285052000, an orthopaedic registrar, 128 Pearson Park, Rosemead Avenue, Kenilworth. 7/5/74, a general medical practitioner, 108 Fordyce Road, Walmer, Port Elizabeth. South-Eastern Cape Local, 14/10/80, 10h00. Section 124 (2) (a) of the Insolvency Act.

T210/74—MURPHY, Albert James, 6/5/47, 4705065028003, Christopherlaan 12, Eldoraigne, Pretoria. 26/2/74, woonagtig te Hermanshof 101, Claimstraat, Johannesburg. Transvaalse Provinsiale, 14/10/80, 10h00. In terme van artikel 124 (3) van die Insolvensiewet, Wet 24 van 1936, soos gewysig, weens die verstryking van 'n periode van ses maande.

T75/76—VISAGIE, Isak Jeremias, 7/1/42, 4201075035006, Multi Motors, Strubenstraat 210, Pretoria, 0002. 20/2/76, Springbokstraat 140, Wierdapark, Verwoerdburg, direkteur van Anker Beleggings (Edms.) Bpk., handeldrywende as Visagie Motors, Voortrekkerstraat 100, Kinross. Transvaalse Provinsiale, 28/10/80, 09h30. In terme van artikel 124 (2) van die Insolvensiewet, No. 24 van 1936.

T1307/73—VAN LILL, Margaretha Jacomina Adriana, 25/7/34, 3407250034000, Eeufeesstraat 89, Pretoria-Noord. 13/11/73, huisvrou van Sloanestraat 16, Bryanston. Transvaalse Provinsiale, 21/10/80, 10h00. Artikel 124 (2) (a) van Wet 24/1936.

T1306/73—VAN LILL, Dirk Frederick Louw, 14/3/35, 350 3145029005, Eeufeesstraat 89, Pretoria-Noord. 13/11/73, maatskappydirekteur van Sloanestraat 16, Bryanston. Transvaalse Provinsiale, 21/10/80, 10h00. Artikel 124 (2) (a) van Wet 24/1936.

T599/77—JOUBERT, Willem Frederik, 31/12/47, 356 245852, Magasynstraat 100, Pietersburg, Tvl., werksaam te Pietersburg Fencing, Stalstraat 27, Industria, Pietersburg. 19/4/77, handel gedryf as Sprokiesland Speelgoedwinkel, Marestraat 21, Pietersburg en Supercon, Nikkelstraat, Superbia, Pietersburg. Transvaalse Provinsiale, 14/10/80, 10h00. Artikel 124 van die Insolvensiewet, No. 24 van 1936, soos gewysig.

T1239/76—HAASBROEK, Jozua Francois, 11/8/24, 240811 5018007, vragmotorbestuurder, werksaam in diens van Wes-Transvaalse Administrasieraad, Afdeling Bedryf, Industriëlegebied, Potchefstroom, en woonagtig te Hoewe 189, Wilgeboom, distrik Potchefstroom, Tvl. 31/8/76, vragmotorbestuurder, woonagtig op die plaas Wilgeboom, distrik Potchefstroom. Transvaalse Provinsiale, 14/10/80, 10h00. Ingevolge die bepalings van artikel 124 (2) (a) van die Insolvensiewet, No. 24 van 1936, soos gewysig. Eerste Likwidasie- en Kontribusierekening op 7/6/77 bekragtig.

T1112/73—KEHLERT, Uli, 31/1/45, 4501315022106, 23 Micro Close, Randhart Extension 1, Alberton. 9/10/79, resided at 13 Kritzinger Street Florentia, Alberton, a director of Antelope Construction (Pty) Ltd. Witwatersrand Local, 14/10/80, 10h00. In terms of section 124 (2) (a) of the Insolvency Act, No. 24 of 1936, as amended.

K5/73—GROBLER, Hermanus Johannes, 11/10/30, 141270 164, W. L. Ochse & Kie., Schweizer-Reneke, woonagtig te Jakopstraat 9, Schweizer-Reneke. 2/3/73, 'n boer van die plaas Klipfontein, distrik Vryburg. Noord-Kaapse, 17/10/80, 10h00. Ingevolge artikel 124 (2) (a) van Wet 24 van 1936, soos gewysig.

T1063/76—FOURIE, Gabriel Carel, 6/5/32, 3205065029003, woonagtig te Doornkraalstraat 100, Ladanna, Pietersburg, en werksaam te Departement Samewerking en Ontwikkeling, Privaatsak X9322, Pietersburg, Transvaalse Provinsiale, 21/10/80, 10h00. Artikel 124 (2) (a) van die Insolvensiewet, No. 24 van 1936, soos gewysig.

N18/76—EVERINGTON, Jack, 6/11/33, 3311065073007, Flat 10b, Amersham Heights, Bamboo Lane, Pinetown, 13/2/76, Durban and Coast Local, 3/11/80, 10h00. Twelve months have elapsed in terms of section 124 (2) (a) of the Insolvency Act, 24/1936, as amended.

T210 C/76—DE LA PORTE, Victor Adolph, 20/6/30, 360 6205032000, a freelance photographer, residing at 19 Guant Road, O'Summit, Randburg, 7/4/76, resided at 107 Frances Road, Norwood and sales manager and partner in a management consultant firm, Marshall Brook Simon & Associates, Third Floor, The Firs, Cradock Avenue, Rosebank, Johannesburg Witwatersrand Local, 18/11/80, 10h00. The First and Final Liquidation and Distribution Account confirmed on 7/10/77, in terms of section 124 (2) (a) of the Insolvency Act, No. 24 of 1936, as amended.

Vorm/Form 7

KENNISGEWING VAN KURATORS

Aangesien 'n tydperk van ses maande verloop het sedert die bekragtiging van die finale kuratorsrekenings in die boedels hieronder genoem, word hierby kennis gegee dat die kurators van genoemde boedels ingevolge artikel 155 van die Insolvensiewet, 1936, alle boeke en stukke in hulle besit wat betrekking op daardie boedels het (behalwe die wat by die Meesters ingedien moet word), ses weke na die datum hiervan sal vernietig.

Die besonderhede word verstrek in die volgorde: Nommer van boedel; naam en beskrywing van boedel; datum van sekwestrasiebevel; afdeling van Hooggeregshof waardeur bevel gegee is; datum van bekragtiging van finale rekening, en naam en adres van kurator.

NOTICE OF TRUSTEES

Notice is hereby given that a period of six months having elapsed since the confirmation of the final trustees' accounts in the estates mentioned below, the trustees of the said estates will, pursuant to section 155 of the Insolvency Act, 1936, destroy all the books and documents in their possession relating to the said estates (except those which are required to be lodged with the Masters) after six weeks from the date of this notice.

The particulars are given in the following order: Number of estate; name and description of estate; date of sequestration order; division of the Supreme Court by which order made; date of confirmation of final account.

C600/78—PRETORIUS, F. J. 11/10/78. Cape of Good Hope Provincial. 5/12/79. P. P. Tredoux, P.O. Box 1457, Cape Town.

Vorm/Form 8

DATUMS VASGESTEL VIR DIE BEWYS VAN EISE DEUR SKULDEISERS

Ingevolge artikel 179 (2) van die Maatskappywet, 1926, artikel 366 (2) van die Maatskappywet, 1973, word hierby kennis gegee van die datums of termyne deur Meesters van die Hooggeregshof vasgestel tot wanneer skuldeisers van maatskappye in likwidasie hulle eise moet bewys of anders van die voordeel van 'n distribusie kragtens 'n rekening by die Meester ingedien voordat daardie eise bewys is, uitgesluit word.

Die besonderhede word verstrek in die volgorde: Nommer van maatskappy in likwidasie; naam en beskrywing van maatskappy; datum of termyn deur Meester vasgestel; naam en adres van likwidateur.

DATES FIXED FOR CREDITORS TO PROVE CLAIMS

Pursuant to section 179 (2) of the Companies Act, 1926, section 366 (2) of the Companies Act, 1973, notice is hereby given of the dates or times fixed by Masters of the Supreme Court by which creditors of companies in liquidation are to prove their claims or otherwise be excluded from the benefit of any distribution under any account lodged with the Master before those debts are proved.

The particulars are given in the following order: Number of company in liquidation; name and description of company; date or time fixed by the Master; name and address of liquidator.

T1390/78—PEENS H. B. 12/9/80. D. H. Rheeder, Posbus 1751, Pretoria.

T86/80—OLLIES MEUBILEERDERS (EDMS.) BPK. 18/9/80. L. B. Marais, p/a Sentrale Trustees (Edms.) Bpk., Posbus 3954, Pretoria, 0001.

T66/80—ROSTSIEGEL PRODUCTS (PTY) LTD. in likwidasie. 8/10/80. H. J. T. Eloff, Posbus 2851, Johannesburg.

T1534/79—MADONNA DIAMANTE (EDMS.) BPK., in likwidasie. 24/9/80. B. G. S. de Wet en D. A. Kahan, Posbus 2851, Johannesburg.

Vorm/Form 9

KENNISGEWINGS VAN OORGAWE VAN 'N SKULDENAAR SE BOEDEL

Ingevolge artikel 4 (1) van die Insolvensiewet, No. 24 van 1936, soos gewysig, word hierby deur 'n versoeker kennis gegee van sy aansoek wat by die Hooggeregshof op die dag en tyd soos genoem gedoen sal word, of so spoedig daarna as wat die saak verhoor kan word, om aanname van die oorgawe van sy boedel; of van die intrekking van 'n sodanige vroeëre kennisgewing van oorgawe en na verkryging van die Meester se toestemming, ingevolge artikel 7 van die Wet.

Die inligting word, waar van toepassing, verstrek in die volgorde: (1) Naam van aansoeker, beroep en adres, styl van vennootskap of firma, en name en adresse van vennote; (2) of 'n aansoek, die Afdeling van die Hooggeregshof en datum en tyd van aansoek, of intrekking van 'n kennisgewing van oorgawe en datum van Meester se toestemming; (3) datum vanaf wanneer sy vermoëstaat ter insae sal lê vir 14 dae, die Meester se kantoor en, indien so, die Landdros se kantoor waar dit sal lê; (4) die prokureur van die aansoeker, adres en datum.

NOTICES OF SURRENDER OF A DEBTOR'S ESTATE

In terms of section 4 (1) of the Insolvency Act, No. 24 of 1936, as amended, notice is hereby given by a petitioner of his making an application to the Supreme Court on the date and time as stated or as soon thereafter as the matter can be heard, for the acceptance of the surrender of his estate; or of the withdrawal of such notice of surrender previously made and upon having received the Master's consent, in terms of section 7 of the Act.

The information, where applicable, is given in the following order: (1) Name of petitioner, occupation and address, style of partnership or firm, and names and addresses of partners; (2) whether application, Division of Supreme Court and date and time of application, or withdrawal of notice of surrender and date of Master's consent; (3) date as from which a statement of his affairs will lie for inspection for 14 days, the Master's Office where lying and, if so, the Magistrate's Office; (4) attorney for petitioner address and date.

MYNHARDT, Andries Petrus, ambagsman van Plot 4, Groenvlei, Bloemfontein, voorheen bouaannemer, Marandorhof 504, Bloemfontein. (2) Oranje-Vrystaatse Provinsiale, 25/8/80, 10h00. (3) 2/9/80; Bloemfontein. (4) Reitz Barry & Pretoruis Kolonial Mutualgebou, Sewende Verdieping, Maitlandstraat, Bloemfontein.

CONT

IN LUMINE TUO VIDEBIMUS LUMEN
University of Fort Hare
Together in Excellence

BENTZ, Ivor Gordon, Flat 1, 48 Bartlett Road, Pinetown. (2) Application, Durban and Coast Local, 26/9/80, 09h30. (3) 29/8/80; Durban and Pinetown, Pietermaritzburg. (4) Halse Havemann & Partners, 10th Floor, Santam Buildings, Smith Street, Durban.

DE BRUYN, Philippus Johannes, 'n wynhuisbestuurder, Voortrekkerstraat 34, Robertson. (2) Aansoek, Kaap die Goeie Hoop Provinsiale, 25/9/80, 10h30. (3) 29/8/80; Kaapstad, Robertson. (4) Bill Tolken, Bresler & Brynard, Saambougebou 502 Kruskallaan, Bellville, 12/8/80.

PRETORIUS, Gert Petrus, 3104245002008, gebore op 24/4/31, tans 'n gepensioeneerde, voorheen polisieman, en tans woonagtig te Debrisstraat 13, Kimberley. (2) Aansoek, Noord-Kaapse Provinsiale, 3/10/80, 10h00. (3) 29/8/80; Kimberley. (4) Engelsman & Benade, Prokureurs vir Applikant, Tweede Verdieping, Corner House, Dutoitspanweg, Posbus 609, Kimberley.

VERLORE LEWENSVERSEKERINGSPOLISSE
LOST LIFE INSURANCE POLICIES

Vorm/Form VL

Artikel 64, Wet 27 van 1943

Kennisgewing geskied hiermee dat bewys van die verlies of vernietiging van die polisse hieronder vermeld, aan die versekeraars gelewer is, en enigeen wat in besit van enige van hierdie polisse is, of aanspraak maak dat hy enige belang daarin het, moet onmiddellik per aangetekende pos met die versekeraars in verbinding tree. By gebreke aan sodanige mededeling sal gewaarmerkte afskrifte van polisse (wat die enigste bewys van die kontrak sal wees) aan die eienaars uitgereik word ingevolge die regulasies gepromulgeer onder die Wet.

Die besonderhede word verstrek in die volgorde: Naam en adres van versekeraar; polisnommer, datum van polis en versekerde bedrag; lewe verseker; eienaar, indien ander as versekerde.

Section 64, Act 27 of 1943

Notice is hereby given that evidence of the loss or destruction of the policies mentioned below, has been submitted to the insurers, and any person in possession of any of these policies, or claiming to have any interest therein, should communicate immediately by registered post with the insurers. Failing any such communication, certified copies of the policies (which shall be the sole evidence of the contract) will be issued to the owners in terms of the regulations framed under the Act.

The particulars are given in the following order: Name and address of insurer; policy number, date of policy, and sum insured; life insured; owner, if other than insured.

African Eagle Lewensversekeringsgenootskap Bpk., Posbus 1114, Johannesburg, 2000

411244—1/5/57, R6 000. Hyland, P. B.
709299—1/12/69, R6 000. Lewis, R. L.
6158654—1/9/79, R8 000. Humphreys, R. W.
6161059—1/7/79, R5 180. Mbekwa, B.
783165—1/3/72, R2 831. Barnard, S. B.
770068—1/1/72, R3 000. Baker, G. H.
414033—1/6/70, R2 483. Biggs, M. J.
6055638—1/9/76, R4 000. Lakay, J. L.
671913—1/2/69, R1 000. Andries, A. N.
611586—1/6/65, R3 250. Potgieter, P.
724195—1/10/70, R4 000. Horne, W. G.
6144193—1/7/78, R10 000. Jhatham, A. G.
334714—1/8/50, R166. Snyman, J. P.
520315—1/5/61, R4 000. Heyns, P. J.
6016165—1/5/75, R8 000. Lovric, V. M. P.
6007307—1/4/75, R15 625. McGregor, A. B.
773434—1/7/72, R20 000. Mukuddem, R. A.
877612—1/11/74, R7 027. Aronstam, D. M.
6174979—1/6/80, R10 000. Frolick, A. D.
6075937—1/9/77, R5 506. Frolick, A. D.
6075960—1/1/78, R5 000. Wareley, K. D.
684230—1/5/69, R1 000. Nhantsi, P. P.
6133277—1/8/78, R5 000. Mkhize, R. S.
1000799—1/3/75, R5 081. Berry, M. E.

Commercial Union Assurance Co. of S.A. Ltd, P.O. Box 222, Johannesburg, 2000

505148—9/8/72, R1 500. Wilson, Roy William.
306125—1/11/66, R7 705. Helyar, D. W. H.
521983—20/7/79, R16 000. Hansen, Jacobus Heinrich.

Commercial Union Assurance Co. of S.A. Ltd

514812—1/12/76, R21 000. Pelser, J. J.

Legal and General Volkskas Assurance Ltd

AF3863214—1/9/66, R5 000. Bell, David Allan; Shirley Ann Bell.
AF3976552—1/3/68, R4 000. Bell, David Allan.
UL5152525—1/7/77, R40 000. Wadley, Richard Geoffrey.
AF4186730—1/5/71, R4 906. Nicolai, Rae.
AF4265658—1/3/72, R4 000. Van Heerden, Jeanie Rudolph.
UL5450515—1/6/79, R12 926. Masemola, Jacob.
AF3714557—1/11/64, R4 300. Wilson, John Clunn.
UL5069752—1/11/76, R29 290. McKenzie, Leslie Peter.
AF3696036—1/9/64, R1 034. Strauss, Roy.
AF0678268—1/12/56, R2 400. Cohn, Hendrik.

Liberty Life Association of Africa Ltd, P.O. Box 10499, Johannesburg, 2000

0632893—1/2/72, R5 954. Kok, M. J. C.
3759218—24/6/70, R2 000. Smith, N. M.
9103599—1/11/77, R8 890. Snyman, J. J. A. S.
9119923—1/9/78, R14 789. Le Roux, E. H.
3551624—8/5/54, R6 000. Drutman, G.
3604893—1/9/57, R5 000. Drutman, G.
0200919—1/8/66, R1 573. Breslawsky, C. J.
0200920—1/8/66, R1 573. Breslawsky, E.
0200921—1/8/66, R1 570. Breslawsky, A.
3576601—9/9/55, R2 000. Engelbrecht, G. N.
9006460—1/5/74, R7 295. Snijman, S. P. E.
9096935—1/9/77, R10 290. McCallum, R. E.; R. L. McCallum.
9004211—1/1/75, R10 000. Evans, P. R.

Metropolitan Homes Trust Lewens Beperk, Posbus 93, Kaapstad, 8000

528040—1/7/78, R5 000. Ceza, Lexie Legina.
523037—1/5/78, R2 000. Biyana, Patricia Mandisa.
636720—1/4/80, R1 000. Tsoanetze, Maphomolo.
519022—1/3/77, R2 000/R400. Solomon, Michael John, en Jennifer Ann Solomon, gebore Burgess; Michael John Solomon.
567751—1/3/79, R1 000. Qasha, Nobahle.
631541—1/5/80, R8 000. Olifant, Daniel April Andrew.
459064—1/9/76, R1 000. Ndamase, Lindikaya Dennis.
324503—1/5/72, R1 000. Blignaut, Ivan Sydney, en Jennifer Blignaut, gebore Harry.
489386—1/8/77, R3 000/R600. Smith, Vernon David, en Johanna Smith, gebore Rosant; Vernon David Smith.
496835—1/4/78, R1 000. Cele, Miriam Nomthandazo, op Phumlani Francis Cele; Miriam Nomthandazo Cele.
343348—1/3/73, R1 000. Notsumi, Levy Matholoone.
461660-1-7—1/3/80, R2 786. Maluleka, Solomon.
462062-1-3—1/4/80, R4 688. Kwinana, Amos.
304094-1-1—1/12/78, R2 403. Biyela, Mbuyiseni.
461158-1-1—1/2/80, R3 600. Ngomane, Mancethane Luther.
369122-1-2—1/9/79, R1 207. Witkoei, Simon.
177697-2-8—1/11/77, R6 000. Baker, Vernon John.
84095-2-8—1/5/69, R765. Davids, Michael John.
459098-1-4—1/7/79, R2 228. Zwane, Skei Samuel.
459101-1-1—1/7/79, R2 000. Khumalo, Moses.
478713-1-8—1/12/79, R1 873. Gcaza, Ncamile Nelson.
478714-1-5—1/12/79, R1 023. Kaleni, Vipi.

National Mutual Life Association of Australasia Ltd, P.O. Box 666, Cape Town, 8000

7029926—8/2/67, R10 000. De Kock, J.; S. de Kock.
7045944—1/9/74, R10 000. Lee, H. S.
7017272—1/3/62, R10 000. Tworetzky, J.

Ned-Equity Insurance Co. Ltd, P.O. Box 290, Johannesburg, 2000

44938-5—7/8/73, R15 000. Kehayas, Angelos.
43916-9—8/12/72, R40 000. Campbell, David Peter; David Bone Kerr Campbell (Donor).
205987-1—13/9/76, R10 000. Lewis, Naphtali; Hilary Barbara Lewis (Cessionary).

University of Pretoria
Together in Excellence

420818-7—2/11/65, R10 000. Maroncelli, Lino.
211864-4—5/6/79, R50 000. Shalit, Menuel.
480776-4—11/7/72, R5 805. Bosch, Johanna Maria; Willem Jacobus Bosch.
480773-1—27/6/72, R6 471. Bosch, Willem Jacobus.
204462-6—4/3/76, R20 000. Boettger, Nolan Clive.

Norwich Union Life Insurance Society, P.O. Box 2252, Pretoria, 0001

548090J—1/9/39, R2 000. Van der Werke, J.
629764D—26/2/46, R3 000. Van der Werke, J.

Permanent Life Assurance Co. Ltd, P.O. Box 4834, Cape Town, 8000

539255RL—6/7/76, R2 800. Dhupelia, Dilipkumar Himatlal.

Protea Assurance Co. Ltd, P.O. Box 71, Cape Town, 8000

284874—27/8/62, R5 000/R1 000. Stolk, F. H.
362002—1/5/73, R4 587. Moffatt, D. P.
382219—1/10/70, R10 000. Pagan, G. U. A. N.
384106—1/7/72, R20 000. Bosch, W. J.

Rand Lewensversekeringsmaatskappy Bpk., Posbus 1652, Johannesburg, 2000

36213/71—11/2/71, R850. Barendse, Femmer.
B28084/66—1/2/67, R200. Sinyane, Damon.
B28514/67—1/7/67, R400. Frasenburg, Apolis.

Rondalia Lewens, Privaatsak X219, Pretoria, 0001

740894—27/9/74, R2 000. Faviers, David Roger.

S.A. Mutual, P.O. Box 66, Cape Town, 8000

3509379—25/1/80, R10 [illegible]6. Chechela, T. F., AD694.
3067936—27/1/77, R3 24[illegible] Magnus, H. M., AD694.
1762393—17/7/62, R5 000. Pirow, P. C., AD694.
3091859—28/3/77, R5 000. Landt, J. D. H., AD694.
3447075—6/5/79, R2 736. Mqhayi, M. M., AD694.
1112008—15/6/55, R237,60. Fowlds, G. G., AD694; estate late G. H. Fowlds.
2355836—25/2/71, R2 000. Korsten, F. W., AD694.
3106815—6/5/77, R1 501. Horak, S. M., AD694.
3221674—20/3/78, R9 257. Neethling, E. A., AD694.
2566699—6/4/73, R4 767. Lottering, S., AD694.
3294152—15/9/78, R5 470. Shumane, S. F., AD674.
3367869—19/3/79, R7 300. Groenewald, E., AD674.
3426660—12/8/79, R10 499. Botha, M. [illegible], AD674.
3522540—23/2/80, R16 908. Ratikane, S. M., AD674.
3524389—25/2/80, R5 599. Van der Haer, B. G., AD674.
2813954—11/2/75, R1 888. Harmse, C. J., AD674.
2813955—11/2/75, R1 885. Harmse, B. G., AD674; C. J. Harmse.
1527640—17/9/59, R211. Rezelman, A. F., AD674; D. C. Rezelman.
1608672—15/8/60, R2 650. Pierneef, C., AD674; A. C. M. Pierneef.
1702315—17/10/61, R5 000. McKenzie, C. K., AD674; R. C Taylor.
2365500—24/3/71, R2 740. Norminton, A., AD674; B. N. Norminton.
1065757—10/12/54, R4 000. Levy, late M.; estate late M. Levy.
1604704—27/7/60, R3 000. Teixeira, V. de J.; M. A. Teixeira.
1966319—13/7/65, R1 167. Maseribane, N. S.
3012045—16/8/76, R3 915. Gayapersad, late; estate late Gayapersad.
725214—23/2/50, R1 000. Masterton, late R. J.; estate late R. J. Masterton.
1635078—15/12/60, R884. James, D. F.
2914693—10/11/75, R232. Damane, late M. E. S.
1272918—22/1/57, R250. Strydom, late J. C.
1320083—3/7/57, R237. Strydom, late J. C.
907338—19/12/52, R530,80. Hiebert, E. K.
1244012—26/9/56, R7,20. Hiebert, E. K.
2186831—10/12/68, R4 150. Goosen, I. J. J., AD697; M. M. Goosen.
3492514—30/11/79, R2 230. Dludla, B. E., AD697.
2276729—7/4/70, R10 000. Legg, G. P., AD697.
2401253—25/8/71, R5 000. Rossouw, A. J., AD697.
3530138—10/3/80, R13 765. Piek, J. S., AD697.
1185597—15/3/56, R2 000. Du Plessis, S. D. W., AD697.
3141338—27/5/77, R3 000. Tlokotsi, D. M., AD697.
3500136—21/12/79, R10 488. Madula, M. R., AD697.
2184774—31/12/68, R4 000. Grobler, G. P. J., AD697; S. M. E. Grobler.
2406686—20/9/71, R4 000. Grobler, G. P. J., AD697.

Sanlam, Posbus 1, Sanlamhof, 7532

618036—1/8/55, R10 000. Maré, F. K.
1419426x0—1/2/70, R2 000. Kinnear, R.
1518516x8—1/9/71, R1 436. Smith, A. G. N.
1664781x0—1/7/74, R1 009. Meintjes, A. W., en B. J. E. Meintjes; A. W. Meintjes.
1937605x2—1/3/75, R5 000. Erasmus, P. J.
3357300x7—1/4/77, R5 116. Carson, A. P.
3361109x6—1/5/77, R5 000. Hemens, W. S.
3365735x4—1/3/77, R9 960. De Wet, P. J. F.
3429281x3—1/4/78, R3 000. Kirsten, M.
3697694x2—1/3/80, R5 800. Basson, J. M.
1503857x3—1/5/71, R3 000. Wiggill, W. G.
1846259x8—1/4/74, R5 000. Robinson, G. W.
1848449x3—1/7/74, R5 000. Vos, B. J.
1874544x8—1/8/74, R5 000. Jacobs, D. J.
1981739x4—1/10/75, R2 000. Jacobs, D. J.
1925076x0—1/10/74, R5 300. Van Dyk, H.
1941352x5—1/2/75, R4 000. Erasmus, C. S.
1986759x7—1/8/75, R3 860. Van der Merwe, E. H.; L. A. van der Merwe.
3230575x7—1/10/75, R1 540. Mt'[illegible]weni, T. K., en N. P. Manlangu.
3344110x6—1/9/77, R3 000. Jeffree, S. M. G.
695599—1/4/57, R1 000. De Kock, J. J.
800131—1/5/59, R1 000. De Kock, J. J.
1306057x9—1/3/68, R3 000. Bornman, G. L.
3227117x3—1/2/76, R30 000. Barnard, S. T.
3242670x2—1/12/75, R2 000. Moila, L. B.
3384577x7—1/4/77, R3 000. Riddin, A. P. G.
2987173x8—1/10/79, R1 680. Breedt, J. H. P.
3441020x9—1/4/78, R6 842. Smith, A. P. J.
3563631x5—1/6/79, R10 000. Carolus, D. J.
3636051x9—1/10/79, R8 960. Harmon, F. C.
1923010x1—1/11/74, R4 690. Louw, A. J. W.
1951608x7—1/6/75, R5 000. Van der Merwe, W. P., Jr.
1984872x0—1/5/75, R2 000. Lephepelo, E. D.
1994826x4—1/8/75, R4 000. Badenhorst, C. H.
3474930x9—1/10/78, R2 415. Du Toit, J. D.
3560912x2—1/4/79, R4 000. Gouws, G. G. C.
1878237x5—1/8/74, R4 000. Bezuidenhout, H. J. S.
3637750x5—1/3/80, R5 382. Strauss, J. A. de W.
3716754x1—1/7/80, R11 908. Viviers, F. J.
3720703x2—1/3/80, R3 210. Steyn, J. B.
858728x9—1/9/60, R1 600. Jones, J. H.
1465593x0—1/7/71, R614. Van Dyk, J. H.
1588289x7—1/5/72, R2 000. Beyers, M. Y.
1588290x5—1/5/72, R1 000. Beyers, M. Y.
1635242x9—1/9/72, R2 000. Esterhuyse, J. C.
3265303x2—1/2/76, R3 000. Changuion, F. D.
3265794x2—1/6/76, R2 723. Bester, P. M.
3326319x5—1/9/76, R6 000. Burger, P.
3666044x7—1/2/80, R6 001. Minnie, C. A.
904597x2—1/8/61, R8 000. Van der Merwe, W. P.
1527328x7—1/8/71, R4 000. Hoffmann, A. C.
1818592x6—1/3/74, R6 220. Steyn, W. P.
1975851x5—1/5/75, R3 000. Donkin, M. E.
[illegible]856x[illegible]—1/8/77, R6 000. Smith, W. J. A.
[illegible]898x4—1/5/78, R3 000. Smith, W. J. A.
536358—1/9/53, R1 000. Merry, P. H.
3210244x4—1/12/75, R5 835. Van Heerden, J. J. P. C.
3309193x5—1/11/76, R3 000. Chetty, D.
1078963x4—1/12/64, R1 000. Botha, H. K.
3654559x8—1/1/80, R3 228. Naude, S. M.
228630—1/3/41, R600. Olivier, J. S.
856180—1/7/60, R2 664. Calitz, S. J., op J. Calitz; S. J. Calitz.
1177933x7—1/9/66, R1 200. Du Toit, A. P. J.
1585290x8—1/5/72, R1 000. Sass, C. J. W.
1829270x6—1/5/74, R5 655. La Grange, J. A. G.
1986137x6—1/8/75, R5 000. Finger, B. M.
3293098x4—1/6/76, R8 000. Bester, P. M.
3304888x5—1/8/76, R5 000. Swart, H. B.
3415225x6—1/8/77, R50 000. Schoeman, J.
3268839x2—1/3/76, R3 000. Leonard, G. H.

The S.A. Trade Union Assurance Society Ltd, Traduna Centre, 118 Jorissen Street, Braamfontein, Johannesburg, 2001

543479—1/1/72, R4 000. Bezuidenhout, Hendrik Cornelius.
562899—1/7/73, R1 000. Williams, Hendrik.
575754—1/8/76, R1 500. Rampyapedi, Sondag Alphens.
595658—1/9/77, R2 000. Mothiba, Simon.
582679—1/1/76, R8 000. Grobler, Zacharias Christiaan.
589976—1/1/77, R1 500. Manyathi, Allison Sibusiso.
590298—1/6/77, R1 500. Madondo, Selby.
618858—1/3/80, R6 636. Lloyd, Johannes.

IN LUMINE TUO VIDEBIMUS LUMEN
University of Pretoria
Copyright in RSA

The Southern Life Association, Great Westerford, Rondebosch, 7700

571504—10/8/59, R421. Till, Miss J. E.
580659—4/8/60, R500. Wilson, S. E.
589743—21/6/61, R6 000. Katz, J.
717636—17/3/71, R4 301. Golsby, S., born Menhinick.
751445-0—3/12/73, R2 891. Harmse, C. J.
832280-3—19/5/80, R5 957,25. Lotter, T. C.
928254-4—9/8/76, R8 025. Garson, G. B.
973960-2—16/8/78, R6 781. Louw, T. A.
988551-4—25/1/80, R3 651. Lombard, Miss A. F.
566538—2/2/59, R134. Mundell, B. E. K.

Union National South British Insurance Company Ltd, P.O. Box 3329, Johannesburg, 2000

121859A—1/12/65, R4 720. Cillie, M. J.
77097—1/6/74, R636. Grobler, B. C.

Vorm/Form B-I 136

NATURALISASIEKENNISGEWINGS
NATURALISATION NOTICES

Kennis word hierby deur die ondervermelde persone gegee dat hulle van voorneme is om, ooreenkomstig artikel 10 van die Wet op Suid-Afrikaanse Burgerskap, 1949, by die Minister van Binnelandse Sake aansoek te doen om sertifikate van naturalisasie as Suid-Afrikaanse burgers, met aanduiding van naam, beroep en woonadres.

Notice is hereby given by the undermentioned persons that they intend to apply to the Minister of the Interior in terms of section 10 of the South African Citizenship Act, 1949, for certificates of naturalisation as South African citizens, indicating name, occupation and residential address.

KAMATERAS, Dimitrios Constantine, markagent/market agent, 28 Pineweg/Road, Fairview, Port Elizabeth, K.P./C.P.

NIESCIOR, Ryszard, ingenieur/engineer, 67 Coedmorelaan/Avenue, Yellow Wood Park, Durban, 4001.

GODINA, Serena, onderwyseres/teacher, 1305 Arnhem Loxtonweg/Road, Milnerton, 7435.

KAUPE, John William, argitek/architect, 201 Jorelvo, 119 Vosstraat/Street, Sunnyside, Pretoria, Tvl.

BOTOULAS, Lorna Audrey, housewife, 6 Keldern Road, Ormonde, Johannesburg, 2091.

BRIOLAS, Basil, droogskoonmakerverteenwoordiger/laundry representative, 30 Bromptonlaan/Avenue, Bantrybaai/Bay, Kaapstad/Cape Town, 8001.

WHITWELL, Patrick Piers, vakkundige beampte (veekunde)/professional officer (animal husbandry), Huis/House 75, Cedarakollege/College, Privaatsak/Private Bag X9059, Pietermaritzburg, 3200.

LITTERICK, William Clark, brandweerman/fireman, 21 Kamutahof/Court, 222 Avondaleweg/Road, Durban, 4001.

DICKSON, Stephen Kenneth Alfred, shop manager, 30 Hillcrest Drive, Beacon Bay, East London, C.P.

DRZEWIECKI, Krzysztof, ingenieur/engineer, 10 Eloffstraat/Street, Vanderbijlpark, 1900.

DRZEWIECKI, Hanna Michalina, ingenieur/engineer, 10 Eloffstraat/Street, Vanderbijlpark, 1900.

VINK-QUIRIJNS, Wilhelmina Evertje, mediese analiste/medical technologist, 27 Woodpeckersirkel/Circle, Yellowwood Park, Durban, 4001.

MAKAN, Bhana Jeevan, direkteur van droogskoonmaker en wassery/director of laundry and dry-cleaning, 73 St. Marksweg/St Mark's Road, Oos-Londen/East London, K.P./C.P.

PINTO, Bravlio Sousa, kraandrywer/cranedriver, 5 Shannon, 188 Mooreweg/Road, Durban, Natal.

FRANKLYN, Christopher Barry, wetenskaplike/scientist, 20 Caithnessweg/Road, Blairgowrie, Randburg, Tvl.

DAYABHAI, Dilip, klerk/clerk, 4373 Willowstraat/Street, Lenasia, 1820.

TOMAN, Alena Marie, sekretaresse/secretary, 42 Maxweltonhof/Court, 6 Goldreichstraat/Street, Hillbrow, Tvl.

TOMAN, Vladimir, eiendomsagent/estate agent, 42 Maxweltonhof/Court, 6 Goldreichstraat/Street, Hillbrow, Tvl.

PARVATIBEN, Bhika, huisvrou/housewife, Flat 21, Gardee's Buildings, Newton, Johannesburg, Tvl.

MAKAN, Mani Chana, huisvrou/housewife, 3 Duineweg/Street, Rylandslandgoed/Estate, Athlone, K.P./C.P.

FRASER, Peter, gereedskapmaker/toolmaker, 9 Glendinningweg/Road, Pinetown.

McDOWELL, Caroline Grace, werkloos/unemployed, 85 Durbanweg/Road, Pietermaritzburg, Natal.

PITA, Manuel Celestino Gonsalves, buidelwaens-driver/straddle-carrier-driver (S.A.R.), 35 The Grove, 143 Esplanade, Durban.

MICHALAK, Eliasz, eie besigheid/business owner, 6 Mannionweg/Road, Bloemfontein, O.V.S./O.F.S.

PARTINGTON, Norman, senior lektor in fotografie/senior lecturer in photography, 32 Lonsdalerylaan/Drive, Durban-Noord/North, 4051.

DAVEY, Michael, toolmaker/fitter, 6 Maree Road, Kommetjie, Cape.

BRIAN, Keith Alan Graney, loodgieter/plumber, 5 Umgazistraat/Street, Wilropark-uitbreiding/Extension 5, Roodepoort, 1725.

BEYNON, Peter John, marine engineer, 1 Sorrento, Westernweg/Road, Sentraal/Central, Port Elizabeth, Eastern Province.

HAU, Yew Lock, butcher, 931 Marina Street, Claremont, Pretoria, Tvl.

WHITTINGTON, Patricia Joan, huisvrou/housewife, 4 Godwinweg/Road, Farrarmere, Benoni, 1500.

MALEJ, Krzystof Janusz Leonard, siviele ingenieur/civil engineer, 4e Pont du Gard, Beachweg/Road, Mouille Point, Kaapstad/Cape Town, 8001.

MA, Wing Yip, sakeman/business man, 12 Norsestraat/Street, Overpoort, Durban, Tvl.

Koop Nasionale Spaarsertifikate

Buy National Savings Certificates

Vorm/Form MVA

DERDEPARTY-ASSURANSIE-EISE OM SKADEVERGOEDING

Wet op Verpligte Motorvoertuigversekering, 1972 (Wet 56 van 1972)

THIRD PARTY INSURANCE CLAIMS FOR COMPENSATION

Compulsory Motor Vehicle Insurance Act, 1972 (Act 56 of 1972)

KENNISGEWING DEUR BEVOEGDE VERSEKERAAR VAN OOREENKOMS BEDOEL IN ARTIKEL 26 VAN DIE WET

Die bevoegde versekeraar genoem in die Bylae hiervan, gee hierby ooreenkomstig artikel 26 (4) van die Wet kennis—

(a) dat hy 'n ooreenkoms soos in artikel 26 (3) (c) bedoel, aangegaan het om 'n bedrag te betaal ten opsigte van 'n eis om skadevergoeding ooreenkomstig artikel 21 van genoemde Wet, naamlik vergoeding wat, indien genoemde versekeraar vir die betaling daarvan aanspreeklik sou gewees het, koste ten opsigte van die akkommodasie, in 'n hospitaal of verpleeginrigting, van die persoon in die Bylae hiervan genoem of ten opsigte van enige behandeling van of diens gelewer of goedere verskaf aan daardie persoon, kon insluit; en

(b) dat genoemde versekeraar nie ooreenkomstig artikel 26 (4) van die Wet verplig is nie om enige bedrag ten opsigte van sodanige koste te betaal aan enigeen wat die akkommodasie of behandeling verskaf of die diens gelewer of die goedere verskaf het en wat nie 'n skriftelike eis voor die verstryking van 'n tydperk van 60 dae na die datum van hierdie kennisgewing by bogenoemde versekeraar ingedien het nie.

Die besonderhede word verstrek in die volgorde, onder die naam en adres van die geregistreerde maatskappy: Naam van persoon/persone beseer of gedood; eisnommer; datum en plek van ongeluk; naam van hospitaal, verpleegrigting of plek waar behandel (indien bekend).

NOTICE BY AUTHORISED INSURER OF AGREEMENT CONTEMPLATED IN SECTION 26 OF THE ACT

The authorised insurer named in the Schedule hereto, hereby gives notice in terms of section 26 (4) of the Act—

(a) that he has entered into an agreement contemplated in section 26 (3) (c) to make a payment in respect of a claim for compensation under section 21 of the said Act, which compensation could, if the said insurer were liable for payment thereof, have included costs in respect of the accommodation of the person named in the Schedule hereto in a hospital or a nursing home or of any treatment of or service rendered or goods supplied to that person; and

(b) that, in terms of section 26 (4) of the Act, the said insurer shall not be obliged to pay any amount in respect of such costs to any person who provided the accommodation or treatment or rendered the service or supplied the goods who has not lodged a claim, in writing, with the said insurer prior to the expiration of a period of 60 days after the date of this notice.

The particulars are given in the following order, under the name and address of the registered company: Name of person(s) injured or killed; claim number; date and place of accident; name of hospital, nursing home or place where treated (if known).

A.A. Mutual Insurance Association Ltd, P.O. Box 927, Bloemfontein

GOUWS, Phoebe Maria Cornelia. Claim 9/6/40088, D. A. du Toit. 12/12/78, corner of Zastron and East Burger Streets, Bloemfontein. Universitashospitaal, Bloemfontein.

A.A. Mutual Insurance Association Ltd, P.O. Box 9595, Johannesburg, 2000

FERNS, James. Claim 8/6/30182, P. W. Breedt. 20/5/77, Middelburg/Belfast/Hendrina intersection. H. F. Verwoerd Hospital, Pretoria.

WOOLDRIDGE, M., Mrs Claim 8/6/26003, S. W. Aburn. 25/9/77, Vereeniging/Johannesburg Road. Vereeniging Hospital and Garden City Clinic, Johannesburg.

LEWIES, Dawid Jacobus. Claim 4/6/30199 22/4/74, corner of Vredenburg and Van Riebeeck Avenues, Potgietersrus, Voortrekker Hospital, Potgietersrus, Pietersburg Hospital and Eugene Marais Hospital, Pretoria.

Bowens, 7th Floor, Hunts Corner, 45 Eloff Street, Johannesburg

KIWICKY, Irene, born Bekisz. Claim 700188. 22/11/76, Johannesburg. Kensington Hospital.

Commercial Union Assurance Company of South Africa Ltd, P.O. Box 2838, Johannesburg, 2000

ECKELMANN, Helmut Claim 0292/90, S. Nzima. 14/6/79, corner of De Waal and Andrew Streets, Nelspruit. Rob Ferreira Hospital, Nelspruit.

Constantia Versekeringsmaatskappy Bpk.

NDHLOVU, Alfred. 8/6/76, Zambesirylaan, Pretoria-Noord. H. F. Verwoerdhospitaal en Gevangenishospitaal.

Federated Employers' Insurance Company Limited, P.O. Box 666, Johannesburg, 2000

NKABINDE, Benjamin. Claim MVA 900042. 15/5/78, Heidelberg Road, Johannesburg. Johannesburg General Hospital and Leratong Hospital.

Mutual & Federal Insurance Co. Ltd (formerly S.A. Mutual Fire & General Insurance Co. Ltd) c/o Biebuyck & Company, P.O. Box 1434, Durban, 4000

SOUNDY, Royaddin Raine. Claim MVS 400793. 29/10/73, Old Main Road, Hillcrest. Wentworth Hospital.

Mutual and Federal Insurance Co. Ltd, P.O. Box 1120, Johannesburg, 2000

SEARLE, Idoline. Claim MVA 801275. 20/6/77, Plaston/Witriver Road.

President Versekeringsmaatskappy Bpk., Posbus 4095, Pretoria, 0001

SEKABATE, Salamina Sally, Eis 8/00266. 8/11/77, Fordsburg. Tembisahospitaal.

Santam Versekeringsmaatskappy Beperk

PRICE, Vernon James. Eis 23/X/11354. 2/9/78, D. F. Malanrylaan, naby Muldersdrift afdraaipad. J. G. Strijdomhospitaal.

Senator Versekeringsmaatskappy Beperk Vianglestraat 174, Pretoria

MMOTO, Isaac Mashilo. Eis MVA 5/D 055. 4/2/75, Maundestraat. Atteridgeville, Pretoria. H. F. Verwoerdhospitaal, Kalafonghospitaal en Weskoppieshospitaal.

Shield Insurance Ltd, P.O. Box 1520, Cape Town

ARENSON, Helene Pearl. Claim 7A. 1504, 17/4/77, Johannesburg. Garden City Clinic, Milpark Hospital.

CASTELYN, Amanda. Claim 8A. 1075. Turffontein, Johannesburg. South Rand Hospital.

University of Fort Hare

Alle Proklamasies, Goewermentskennisgewings en Algemene Kennisgewings gepubliseer word vir verwysingsdoeleindes in die volgende inhoudsopgawe ingesluit wat dus 'n weekliks indeks voorstel. Laat u self deur die Koerantnommers in die regterhandse kolom lei:

INHOUD

en weekliks indeks

No.		Bladsy No.	Staatskoerant No.
	VOLKSRAAD		
	Vakante pos: Oos-Londen-Noord	1	7186
	PROKLAMASIES		
147	Wet op Groepsgebiede (36/1966): Verklaring: Molteno: Gekleurde groep	1	7199
148	do.: do.: Utrecht: Gekleurde groep	1	7199
149	Wet op die Konstitusie van Suidwes-Afrika (39/1968): Proklamasie om die Kommissiewet, 1947, in die gebied Suidwes-Afrika van toepassing te maak	3	7199
150	Waterwet (54/1956): Weltevreden-besproeiingsdistrik, Marico, Tvl.: Afskaffing	3	7199
	GOEWERMENTS- EN ALGEMENE KENNISGEWINGS		
	Binnelandse Sake, Departement van		
	Goewermentskennisgewings		
1738	Wet op Publikasies (42/1974): Ongewenste publikasies of voorwerpe: Lys P80/43	1	7185
1739	do.: Periodieke ongewenste publikasies	2	7185
1740	do.: Verbod op besit	2	7185
1741	do.: Vertoë	2	7185
1742	do.: do.	2	7185
1743	do.: do.	3	7185
1761	Wet op Vreemdelinge (1/1937): Vansverandering: Carstens in Stowik	4	7199
1762	do.: do.: Nicholas in Morrison Reid	4	7199
1763	do.: do.: Scheepers in De Chazal	4	7199
1764	do.: do.: Jordaan in Jordan	4	7199
1780	Wet op Vreemdelinge (1/1937): Vansverandering: Chanin in Tulipan	4	7199
1785	Wet op Vreemdelinge (1/1937): Vansverandering: Ledoyen in Smorenburg	5	7199
	Finansies, Departement van		
	Goewermentskennisgewing		
1820	Wet op Nasionale Finansiekorporasie (33/1949): Aanstelling van direkteure	5	7199
	Algemene Kennisgewing		
608	Rand Bank Beperk: Kennisgewing ingevolge artikel 12 (1)	38	7199
	Gemeenskapsbou, Departement van		
	Goewermentskennisgewing		
1786	Wet op Huurbeheer (80/1976): Van Huurbeheer onthef: Cliffsea, Kaapstad	5	7199
	Algemene Kennisgewings		
593	Kennisgewing van onteiening: Kaapstad	22	7199
596	Kennisgewing van onteiening: Riversdal	24	7199
601	Strandwet (21/1935): Voorgestelde verhuring: Sondagsrivier, Port Elizabeth	29	7199
602	Staatsgrond per openbare veiling te koop aangebied: Grabouw	32	7199
	Gesondheid, Welsyn en Pensioene, Departement van		
	Goewermentskennisgewing		
R. 1754	Verbeteringskennisgewing	1	7188
	Algemene Kennisgewing		
595	Wet op Anatomiese Skenkings en Nadoodse Ondersoeke (24/1970): Wysiging van regulasies	23	7199

For purposes of reference, all Proclamations, Government Notices and General Notices published are included in the following table of contents which thus forms a weekly index. Let yourself be guided by the Gazette numbers in the right-hand column:

CONTENTS

and weekly index

No.		Page No.	Gazette No.
	HOUSE OF ASSEMBLY		
	Vacancy: East London North	1	7186
	PROCLAMATIONS		
147	Group Areas Act (36/1966): Declaration: Molteno: Coloured group	1	7199
148	do.: do.: Utrecht: Coloured group	1	7199
149	South West Africa Constitution Act (39/1968): Proclamation to apply the Commissions Act, 1947, in the Territory of South West Africa	3	7199
150	Water Act (54/1956): Weltevreden Irrigation District, Marico, Tvl: Disestablishment	3	7199
	GOVERNMENT AND GENERAL NOTICES		
	Agriculture and Fisheries, Department of		
	Government Notice		
R. 1746	Marketing Act (59/1968): Imposition of levy and special levy on mohair	1	7188
	General Notices		
594	Plant Breeders' Rights Act (15/1976): Receipt of applications	24	7199
600	Quarterly return of brands	30	7199
605	Commission for Fresh Produce Markets Act (82/1970): Application for erection: Louis Trichardt	34	7199
606	Abattoir Industry Act (54/1976): Application for erection: Hazenjacht, Oudtshoorn	35	7199
	Commerce and Consumer Affairs, Department of		
	Government Notice		
R. 1728	Hire Purchase Act (36/1942): Amendment	1	7188
	General Notice		
582	Companies Act (61/1973): Registration of companies	1	7190
	Community Development, Department of		
	Government Notice		
1786	Rent Control Act (80/1976): Exempted from Rent Control: Cliffsea, Cape Town	5	7199
	General Notices		
593	Notice of expropriation: Cape Town	22	7199
596	Notice of expropriation: Riversdale	24	7199
601	Sea-shore Act (21/1935): Proposed lease: Sundays River, Port Elizabeth	29	7199
602	State land offered for sale by public auction: Grabouw	32	7199
	Co-operation and Development, Department of		
	Government Notices		
R. 1717	Community Councils Act (125/1977): Establishment: Memel	1	7191
R. 1718	do.: Regulations: Memel	1	7191
R. 1719	do.: Establishment: Petrus Steyn	31	7191
R. 1720	do.: Regulations: Petrus Steyn	32	7191
R. 1721	do.: Establishment: Clarens	1	7192

VIDE BIMUS LUMEN LUMINE TUO
University of Fort Hare
Together in Excellence

No.		Bladsy No.	Staatskoerant No.
Handel en Verbruikersake, Departement van			
Goewermentskennisgewing			
R. 1728	Wet op Huurkoop (36/1942): Wysiging....	1	7188
Algemene Kennisgewing			
582	Maatskappywet (61/1973): Registrasie van maatskappye.....	1	7190
Landbou en Visserye, Departement van			
Goewermentskennisgewing			
R. 1746	Bemarkingswet (59/1968): Oplegging van heffing en spesiale heffing op sybokhaar....	1	7188
Algemene Kennisgewings			
594	Wet op Planttelersregte (15/1976): Ontvangs van aansoeke.....	24	7199
600	Kwartaallikse opgawe van brandmerke....	30	7199
605	Wet op die Kommissie vir Varsproduktemarke (82/1970): Aansoek om oprigting: Louis Trichardt.....	34	7199
606	Wet op die Abattoirbedryf (54/1976): Aansoek om oprigting: Hazenjacht, Oudtshoorn.....	35	7199
Mannekragbesetting, Departement van			
Goewermentskennisgewings			
R. 1726	Wet op Nywerheidsversoening (28/1956): Meubelnywerheid, W.K.: Hernuwing van Voorsorgfondsooreenkoms.....	2	7188
R. 1729	Wet op Nywerheidsversoening (28/1956): Motornywerheid: Wysiging van Nasionale Gesondheidsfondsooreenkoms.....	2	7188
R. 1730	do.: Drank en Spyseniersbedryf, Pietermaritzburg: Wysiging van Voorsorgfondsooreenkoms.....	4	7188
R. 1731	do.: do.: Verlenging van Voorsorgfondsooreenkoms.....	4	7188
R. 1732	do.: Drank en Spyseniersbedryf, Kaap: Hernuwing van Voorsorgfondsooreenkoms	5	7188
R. 1747	Wet op Vakleerlinge (37/1944): Elektrisiteitleweringsnywerheid: Wysiging van Leervoorwaardes.....	6	7188
Algemene Kennisgewing			
604	Aansoek om registrasie van 'n werkgewersorganisasie.....	32	7199
Mineraal- en Energiesake, Departement van			
Algemene Kennisgewing			
603	Wet op Mynregte (20/1967): Uithou van grond vir die doeleindes van 'n openbare pad.....	32	7199
Nasionale Opvoeding, Departement van			
Goewermentskennisgewing			
1760	Wet op Nasionale Gedenkwaardighede (28/1969): Verklaring: Grootkerk, Pretoria	6	7199
Nywerheidswese, Departement van			
Algemene Kennisgewings			
609	Douane- en Aksynstariefaansoeke: Lys 28/80.....	33	7199
610	do.: Lys 94.....	38	7199
Samewerking en Ontwikkeling, Departement van			
Goewermentskennisgewings			
R. 1717	Wet op Gemeenskapsrade (125/1977): Instelling: Memel.....	1	7191
R. 1718	do.: Regulasies: Memel.....	1	7191
R. 1719	do.: Instelling: Petrus Steyn.....	31	7191
R. 1720	do.: Regulasies: Petrus Steyn.....	32	7191
R. 1721	do.: Instelling: Clarens.....	1	7192
R. 1722	do.: Regulasies: Clarens.....	1	7192
R. 1723	do.: Instelling: Vrede.....	31	7192
R. 1724	do.: Regulasies: Vrede.....	32	7192
R. 1748	Wet op Gemeenskapsrade (125/1977): Regulasies: Beheer oor aanhou van honde: Heidelberg.....	1	7193
R. 1749	do.: do.: Kroonstad.....	7	7193
R. 1750	do.: do.: Beheer oor aanhou van honde: Springs.....	1	7194
R. 1722	do.: Regulations: Clarens.....	1	7192
R. 1723	do.: Establishment: Vrede.....	31	7192
R. 1724	do.: Regulations: Vrede.....	32	7192
R. 1748	Community Development Act (125/1977): Regulations: Control of keeping of dogs: Heidelberg.....	1	7193
R. 1749	do.: do.: Kroonstad.....	7	7193
R. 1750	do.: do.: Control of keeping of dogs: Springs.....	1	7194
R. 1751	do.: do.: Germiston.....	7	7194
1774	Second KaNgwane Payment and Privileges of Members of the Legislative Assembly Amendment Act (7/1980).....	6	7199
1775	KaNgwane Licensing and Control of Dogs Act, 1980.....	8	7199
1776	KaNgwane Development Tax Act, 1980.....	12	7199
1777	KaNgwane Archives Act, 1980.....	17	7199
1778	Redefinition of the area of the Thembu tribe	21	7199
1779	Barberton Commissioner's Court.....	22	7199
1815	Blacks Abolition of Passes and Co-ordination of Documents Act (67/1952): Amendment of G.N. 775/1980.....	21	7199
Finance, Department of			
Government Notice			
1820	National Finance Corporation Act (33/1949): Appointment of directors.....	5	7199
General Notice			
608	Rand Bank Beperk: Notice in terms of section 12 (1).....	38	7199
Health, Welfare and Pensions, Department of			
Government Notice			
R. 1754	Correction notice.....	1	7188
General Notice			
595	Anatomical Donations and Post-mortem Examinations Act (24/1970): Amendment of regulations.....	23	7199
Industries, Department of			
General Notices			
609	Customs and Excise Tariff Applications: List 28/80.....	33	7199
610	do.: List 94.....	38	7199
Interior, Department of the			
Government Notices			
1738	Publications Act (42/1974): Undesirable publications or objects: List P80/43.....	1	7185
1739	do.: Undesirable periodic publications.....	2	7185
1740	do.: Prohibition on possession.....	2	7185
1741	do.: Representations.....	2	7185
1742	do.: do.....	2	7185
1743	do.: do.....	3	7185
1761	Aliens Act (1/1937): Change of surname: Carstens to Stowik.....	4	7199
1762	do.: do.: Nicholas to Morrison Reid.....	4	7199
1763	do.: do.: Scheepers to De Chazal.....	4	7199
1764	do.: do.: Jordaan to Jordan.....	4	7199
1780	Aliens Act (1/1937): Change of surname: Chanin to Tulipan.....	4	7199
1785	Aliens Act (1/1937): Change of surname: Ledoyen to Smorenburg.....	5	7199
Manpower Utilisation, Department of			
Government Notices			
R. 1726	Industrial Conciliation Act (28/1956): Furniture Manufacturing Industry, W.C.: Renewal of Provident Fund Agreement....	2	7188
R. 1729	Industrial Conciliation Act (28/1956): Motor Industry: Amendment of National Health Funds Agreement.....	2	7188
R. 1730	do.: Liquor and Catering Trade, Pietermaritzburg: Amendment of Provident Fund Agreement.....	4	7188
R. 1731	do.: do.: Extension of Provident Fund Agreement.....	4	7188
R. 1732	do.: Liquor and Catering Trade, Cape: Renewal of Provident Fund Agreement....	5	7188
R. 1747	Apprenticeship Act (37/1944): Electricity Supply Undertaking: Amendment of Conditions.....	6	7188

IN LUMINE TUO VIDEBIMUS LUMEN
University of Pretoria
Tomorrow's leaders in excellence

No.		Bladsy No.	Staatskoerant No.
R. 1751	do.: do.: Germiston	7	7194
1774	Tweede KaNgwane-wysigingswet op die Betaling en Voorregte van Lede van die Wetgewende Vergadering (7/1980)	6	7199
1775	KaNgwane-wet op Lisensiering en Beheer van Honde, 1980	8	7199
1776	KaNgwane-wet op Ontwikkelingsbelasting, 1980	12	7199
1777	KaNgwane-wet op Argiewe, 1980	17	7199
1778	Herbepaling van die gebied van die Themba-stam	21	7199
1779	Kommissarishof: Barberton	22	7199
1815	Swartes Afskaffing van Passe en Koördinering van Dokumentewet (67/1952): Wysiging van GK 775/1980	21	7199
Statistiek, Departement van			
Goewermentskennisgewing			
R. 1715	Wet op Statistieke (66/1976): Regulasies kragtens artikel 17: Dorpsontwikkeling	6	7188
Suid-Afrikaanse Spoorweë, Departement van			
Goewermentskennisgewing			
R. 1736	Algemene Spoorwegregulasies	6	7188
Vervoer, Departement van			
Algemene Kennisgewing			
607	Wet op Lugdienste (51/1949): Aansoek om lisensies	35	7199
	Amptelike publikasies uitgereik gedurende Junie 1980	39	
	Gewysigde sluitingstye vir wetlike en Goewermentskennisgewings	40	
	WETLIKE ADVERTENSIES		
	Algemene Voorwaardes en Tariewe	41	
	Aktes: Verlore Dokumente	51	
	Algemeen	71	
	Besigheidskennisgewings	44	
	Boedelwettekennisgewings	94	
	Derdeparty-assuransie-eise	137	
	Geregtelike en Openbare Verkope	57	
	Handelsmerke in SWA	86	
	Insolvensiewet- en Maatskappywette-kennisgewings	123	
	Likwidateurskennisgewings	51	
	Maatskappykennisgewings	46	
	Naamsveranderings	69	
	Naturalisasiekennisgewings	136	
	Orders van die Hof	55	
	Publieke Veilings	67	
	Slagterskennisgewings	70	
	Slumopruimingshof-kennisgewings	71	
	Tersydestellings en Afwysings van Aansoeke	57	
	Verlore Lewensversekeringspolisse	134	

No.		Page No.	Gazette No.
General Notice			
604	Application for registration of an employers' organisation	32	7199
Mineral and Energy Affairs, Department of			
General Notice			
603	Mining Rights Act (20/1967): Reservation of land for the purposes of a public road	32	7199
National Education, Department of			
Government Notice			
1760	National Monuments Act (28/1969): Declaration: Grootkerk, Pretoria	6	7199
South African Railways, Department of			
Government Notice			
R. 1736	General Railway Regulations	6	7188
Statistics, Department of			
Government Notice			
R. 1715	Statistics Act (66/1976): Regulations in terms of section 17: Township development	6	7188
Transport, Department of			
General Notice			
607	Air Services Act (51/1949): Applications for licences	35	7199
	Official publications issued during June 1980	39	
	Amended closing times for legal and Government notices	40	
	LEGAL ADVERTISEMENTS		
	General Conditions and Rates	41	
	Administration of Estates Acts Notices	94	
	Business Notices	44	
	Butchers' Notices	70	
	Change of Name	69	
	Companies Notices	46	
	Deeds: Lost Documents	51	
	General	71	
	Insolvency Acts and Companies Acts Notices	123	
	Liquidators' Notices	51	
	Lost Life Insurance Policies	134	
	Naturalisation Notices	136	
	Orders of the Court	55	
	Public Auctions	67	
	Sales in Execution and Public Sales	57	
	Slums Clearance Court Notices	71	
	Supersessions and Discharge of Petitions	57	
	Third Party Insurance Claims	137	
	Trade Marks in SWA	86	

Gedruk deur en verkrygbaar by die Staatsdrukker, Bosmanstraat, Privaatsak X85, Pretoria, 0001

Printed by and obtainable from the Government Printer, Bosman Street, Private Bag X85, Pretoria, 0001

7199—5

University of Fort Hare
Together in Excellence

7200

University of Fort Hare
Together in Excellence

STAATSKOERANT
VAN DIE REPUBLIEK VAN SUID-AFRIKA

REPUBLIC OF SOUTH AFRICA
GOVERNMENT GAZETTE

REGULASIEKOERANT No. 3061 PRYS + 1c AVB 20c PRICE + 1c GST REGULATION GAZETTE No. 3061

As 'n Nuusblad by die Poskantoor Geregistreer BUITELANDS 30c ABROAD *Registered at the Post Office as a Newspaper*

POSVRY · POST FREE

VOL. 182] PRETORIA, 29 AUGUSTUS / AUGUST 1980 [No. 7200

PROKLAMASIES

van die Staatspresident van die Republiek van Suid-Afrika

No. R. 151, 1980

TABAKSKEMA.—WYSIGING

Nademaal die Minister van Landbou en Visserye, kragtens artikel 9 (2) (c), saamgelees met artikel 15 (3) van die Bemarkingswet, 1968 (Wet 59 van 1968), die voorgestelde wysiging in die Bylae hiervan uiteengesit, van die Tabakskema, afgekondig by Proklamasie R. 159 van 1971, soos gewysig, aangeneem het en kragtens artikel 12 (1) (b) van genoemde Wet goedkeuring van die voorgestelde wysiging aanbeveel het;

So is dit dat ek, kragtens die bevoegdheid my verleen by artikel 14 (1) (a), saamgelees met die genoemde artikel 15 (3) van genoemde Wet, hierby verklaar dat die genoemde wysiging op die datum van publikasie hiervan in werking tree.

Gegee onder my Hand en die Seël van die Republiek van Suid-Afrika te Pretoria, op hede die Vyftiende dag van Augustus Eenduisend Negehonderd-en-tagtig.

M. VILJOEN, Staatspresident.

Op las van die Staatspresident-in-rade:

H. S. J. SCHOEMAN.

BYLAE

Die Tabakskema, afgekondig by Proklamasie R. 159 van 1971, soos gewysig, word hierby soos volg verder gewysig:

1. Artikel 11 word hierby gewysig deur subartikel (1) deur die volgende subartikel te vervang:

"(1) 'n Lid van die Raad word, behoudens die bepalings van artikel 28A van die Wet, deur die Minister aangestel vir die tydperk wat hy bepaal, maar van hoogstens drie jaar: Met dien verstande dat geen persoon wat 68 jaar of ouer is as lid aangestel mag word nie.".

PROCLAMATIONS

by the State President of the Republic of South Africa

No. R. 151, 1980

TOBACCO SCHEME.—AMENDMENT

Whereas the Minister of Agriculture and Fisheries has, in terms of section 9 (2) (c), read with section 15 (3), of the Marketing Act, 1968 (Act 59 of 1968), accepted the proposed amendment set out in the Schedule hereto, to the Tobacco Scheme, published by Proclamation R. 159 of 1971, as amended, and has in terms of section 12 (1) (b) of the said Act recommended the approval of the proposed amendment;

Now, therefore, under the powers vested in me by section 14 (1) (a), read with the said section 15 (3), of the said Act, I hereby declare that the said amendment shall come into operation on the date of publication hereof.

Given under my Hand and the Seal of the Republic of South Africa at Pretoria this Fifteenth day of August, One thousand Nine hundred and Eighty.

M. VILJOEN, State President.

By Order of the State President-in-Council:

H. S. J. SCHOEMAN.

SCHEDULE

The Tobacco Scheme, published by Proclamation R. 159 of 1971, as amended, is hereby further amended as follows:

1. Section 11 is hereby amended by the substitution for subsection (1) of the following subsection:

"(1) A member of the Board shall, subject to the provisions of section 28A of the Act, be appointed by the Minister for such period, not exceeding three years, as he may determine: Provided that no person of or over the age of 68 years shall be appointed as a member.".

2. Artikel 19 word hierby gewysig deur die volgende paragraaf na paragraaf (b) by te voeg:

"(c) aan—

(i) 'n komitee of organisasie wat deur die Suid-Afrikaanse Landbou-unie ingestel of in die lewe geroep is om die een of ander vertakking van die tabakbedryf te bevorder; en

(ii) 'n organisasie wat in die lewe geroep is om die een of ander vertakking van die tabakbedryf te bevorder en by genoemde Unie of 'n provinsiale landbou-unie geaffilieer is:

Met dien verstande dat die Raad nie sodanige bystand aan so 'n komitee of organisasie verleen nie, tensy dié komitee of organisasie deur middel van en met die goedkeuring van genoemde Suid-Afrikaanse Landbou-unie vertoë daarvoor tot die Raad gerig het.".

3. Artikel 32 word hierby gewysig deur subartikel (1) deur die volgende subartikel te vervang:

"(1) Die Raad kan, onderworpe aan die goedkeuring van die Minister en die voorwaardes deur hom goedgekeur, die agente aanstel wat die Raad nodig ag vir die behoorlike verrigting van sy werksaamhede.".

4. Artikel 40 word hierby gewysig deur die uitdrukkings "R200" en "ses" deur die uitdrukkings "R1 000" en "twaalf" onderskeidelik te vervang.

2. Section 19 is hereby amended by the addition of the following paragraph after paragraph (b):

"(c) (i) a committee or organisation established or instituted by the South African Agricultural Union to promote any branch of the tobacco industry;

(ii) any organisation instituted to promote any branch of the tobacco industry and affiliated with the said Union or a provincial agricultural union:

Provided that the Board shall not grant such assistance to such a committee or organisation unless the committee or organisation has, through and with the approval of the said South African Agricultural Union, made representations therefor to the Board.".

3. Section 32 is hereby amended by the substitution for subsection (1) of the following subsection:

"(1) The Board may, subject to the approval of the Minister and the conditions approved by him, appoint such agents as it may consider necessary for the proper performance of its functions.".

4. Section 40 is hereby amended by the substitution for the expressions "R200" and "six" of the expressions "R1 000" and "twelve" respectively.

No. R. 152, 1980

AARTAPPELSKEMA.—WYSIGING

Nademaal die Minister van Landbou en Visserye kragtens artikel 9 (2) (c), saamgelees met artikel 15 (3) van die Bemarkingswet, 1968 (Wet 59 van 1968), die voorgestelde wysiging in die Bylae hiervan uiteengesit van die Aartappelskema, afgekondig by Proklamasie R. 268 van 1970, soos gewysig, aangeneem het, en kragtens artikel 12 (1) (b) van genoemde Wet goedkeuring van die voorgestelde wysiging aanbeveel het;

So is dit dat ek kragtens die bevoegdheid my verleen by artikel 14 (1) (a), saamgelees met die genoemde artikel 15 (3) van genoemde Wet, hierby verklaar dat die genoemde wysiging op die datum van publikasie hiervan in werking tree.

Gegee onder my Hand en die Seël van die Republiek van Suid-Afrika te Durban, op hede die Agtste dag van Augustus Eenduisend Negehonderd-en-tagtig.

M. VILJOEN, Staatspresident.

Op las van die Staatspresident-in-rade:

H. S. J. SCHOEMAN.

BYLAE

Die Aartappelskema, afgekondig by Proklamasie R. 268 van 1970, soos gewysig, word hierby soos volg verder gewysig:

1. Artikel 11 word gewysig—

(a) deur subartikel (1) deur die volgende subartikel te vervang:

"(1) 'n Lid van die Raad word behoudens die bepalings van artikel 28A van die Wet deur die Minister aangestel vir die tydperk wat hy bepaal maar van hoogstens drie jaar: Met dien verstande dat geen persoon wat 68 jaar of ouer is as lid aangestel mag word nie."; en

No. R. 152, 1980

POTATO SCHEME.—AMENDMENT

Whereas the Minister of Agriculture and Fisheries has, in terms of section 9 (2) (c) read with section 15 (3) of the Marketing Act, 1968 (Act 59 of 1968), accepted the proposed amendment as set out in the Schedule hereto, to the Potato Scheme, published by Proclamation R. 268 of 1970, as amended, and has, in terms of section 12 (1) (b) of the said Act, recommended the approval of the proposed amendment;

Now, therefore, under the powers vested in me by section 14 (1) (a) read with the said section 15 (3) of the said Act, I do hereby declare that the said amendment shall come into operation on the date of publication hereof.

Given under my Hand and the Seal of the Republic of South Africa at Durban this Eighth day of August, One thousand Nine hundred and Eighty.

M. VILJOEN, State President.

By Order of the State President-in-Council:

H. S. J. SCHOEMAN.

SCHEDULE

The Potato Scheme, published by Proclamation R. 268 of 1970, as amended, is hereby further amended as follows:

1. Section 11 is amended—

(a) by the substitution for subsection (1) of the following subsection:

"(1) Subject to the provisions of section 28A of the Act, a member of the Board shall be appointed by the Minister for such period, not exceeding three years, as he may determine: Provided that no person of or over the age of 68 years shall be appointed as a member."; and

University of Fort Hare
Digitized by Sabinet Gateway

(b) deur na subartikel (3) die volgende subartikel in te voeg:

"(4) Wanneer 'n lid van die Raad afwesig is of nie in staat is om sy ampspligte uit te voer nie, kan die Minister iemand anders wat hy geskik ag, aanstel om op te tree in die plek van daardie lid gedurende sy afwesigheid of solank hy nie in staat is om sy ampspligte uit te voer nie, en so iemand beklee sy amp asof hy lid van die Raad is: Met dien verstande dat iemand wat aldus aangestel is om in die plek van die voorsitter of onder-voorsitter van die Raad op te tree, slegs die pligte van 'n gewone lid uitvoer, tensy die Raad anders besluit.".

2. Artikel 21 word gewysig deur die volgende paragraaf by te voeg:

"(c) aan—

(i) 'n komitee of organisasie wat deur die Suid-Afrikaanse Landbou-unie ingestel of in die lewe geroep is om een of ander vertakking van die aartappelbedryf te bevorder; en

(ii) 'n organisasie wat in die lewe geroep is om die een of ander vertakking van die aartappelbedryf te bevorder en by genoemde Unie of 'n provinsiale landbou-unie geaffilieer is:

Met dien verstande dat die Raad nie sodanige bystand aan so 'n komitee of organisasie verleen nie, tensy dié komitee of organisasie deur middel van en met die goedkeuring van genoemde Suid-Afrikaanse Landbou-unie vertoë daarvoor tot die Raad gerig het.".

3. Artikel 34 gewysig deur subartikel (1) deur die volgende subartikel te vervang:

"(1) Die Raad kan, onderworpe aan die goedkeuring van die Minister en die voorwaardes deur hom goedgekeur, die agente aanstel wat die Raad nodig ag vir die behoorlike verrigting van sy werksaamhede.".

4. Artikel 40 word gewysig deur in die laaste gedeelte van die sin die uitdrukking "R200" deur die uitdrukking "R1 000" en die woord "ses" deur die woord "twaalf" te vervang.

No. R. 153, 1980

SKEMA VIR INMAAKVRUGTE.—WYSIGING

Nademaal die Minister van Landbou en Visserye, kragtens artikel 9 (2) (c), saamgelees met artikel 15 (3), van die Bemarkingswet, 1968 (Wet 59 van 1968), die voorgestelde wysiging in die Bylae hiervan uiteengesit, van die Skema vir Inmaakvrugte, afgekondig by Proklamasie R. 215 van 1970, soos gewysig, aangeneem het, en kragtens artikel 12 (1) (b) van genoemde Wet goedkeuring van die voorgestelde wysiging aanbeveel het;

So is dit dat ek kragtens die bevoegdheid my verleen by artikel 14 (1) (a), saamgelees met die genoemde artikel 15 (3) van genoemde Wet, hierby verklaar dat die genoemde wysiging op die datum van publikasie hiervan in werking tree.

Gegee onder my Hand en die Seël van die Republiek van Suid-Afrika te Durban, op hede die Agtste dag van Augustus Eenduisend Negehonderd-en-tagtig.

M. VILJOEN, Staatspresident.

Op las van die Staatspresident-in-rade:

S. J. SCHOEMAN.

(b) by the addition after subsection (3) of the following subsection:

"(4) Whenever a member of the Board is absent or unable to fulfil his duties, the Minister may appoint any other person whom he considers suitable to act in the place of that member during his absence or while he is unable to fulfil his duties, and such person shall hold office as if he were a member of the Board: Provided that a person so appointed to act in the place of the chairman or the vice-chairman of the Board shall perform the duties of an ordinary member only, unless the Board decides otherwise.".

2. Section 21 is amended by the addition of the following paragraph:

"(c) (i) a committee or organisation established or instituted by the South African Agricultural Union to promote any branch of the potato industry;

(ii) any organisation instituted to promote any branch of the potato industry and affiliated with the said Union or a provincial agricultural union:

Provided that the Board shall not grant such assistance to such a committee or organisation unless the committee or organisation has, through and with the approval of the said South African Agricultural Union, made representations therefor to the Board.".

3. Section 34 is amended by the substitution for subsection (1) of the following subsection:

"(1) The Board may, subject to the approval of the Minister and the conditions approved by him, appoint such agents as it may consider necessary for the proper performance of its functions.".

4. Section 40 is amended by the substitution in the last part of the sentence for the expression "R200" of the expression "R1 000" and for the word "six" of the word "twelve".

No. R. 153, 1980

CANNING FRUIT SCHEME.—AMENDMENT

Whereas the Minister of Agriculture and Fisheries has, in terms of section 9 (2) (c), read with section 15 (3), of the Marketing Act, 1968 (Act 59 of 1968), accepted the proposed amendment, set out in the Schedule hereto, to the Canning Fruit Scheme, published by Proclamation R. 215 of 1970, as amended, and has, in terms of section 12 (1) (b) of the said Act, recommended the approval of the proposed amendment;

Now, therefore, under the powers vested in me by section 14 (1) (a), read with the said section 15 (3) of the said Act, I hereby declare that the said amendment shall come into operation on the date of publication hereof.

Given under my Hand and the Seal of the Republic of South Africa at Durban this Eighth day of August, One thousand Nine hundred and Eighty.

M. VILJOEN, State President.

By order of the State President-in-Council:

S. J. SCHOEMAN.

BYLAE

Die Skema vir Inmaakvrugte, afgekondig by Proklamasie R. 215 van 1970, soos gewysig, word hierby soos volg verder gewysig:

1. Artikel 11 word hierby gewysig deur subartikel (1) deur die volgende subartikel te vervang:

"(1) 'n Lid van die Raad word, behoudens die bepalings van artikel 28A van die Wet, deur die Minister aangestel vir die tydperk wat hy bepaal, maar van hoogstens drie jaar: Met dien verstande dat geen persoon wat 68 jaar of ouer is as lid aangestel mag word nie.".

2. Artikel 25 word hierby gewysig deur die volgende paragraaf na paragraaf (b) by te voeg:

"(c) aan—

(i) 'n komitee of organisasie wat deur die Suid-Afrikaanse Landbou-unie ingestel of in die lewe geroep is om die een of ander vertakking van die inmaakvrugte bedryf te bevorder; en

(ii) 'n organisasie wat in die lewe geroep is om die een of ander vertakking van die inmaakvrugte bedryf te bevorder en by genoemde Unie of 'n provinsiale landbou-unie geaffilieer is:

Met dien verstande dat die beheerraad nie sodanige bystand aan so 'n komitee of organisasie verleen nie, tensy dié komitee of organisasie deur middel van en met die goedkeuring van genoemde Suid-Afrikaanse Landbou-unie vertoë daarvoor tot dié beheerraad gerig het.".

3. Artikel 43 word hierby gewysig deur die woorde "tweehonderd" en "ses" deur die woorde "eenduisend" en "twaalf" onderskeidelik te vervang.

SCHEDULE

The Canning Fruit Scheme, published by Proclamation R. 215 of 1970, as amended, is hereby further amended as follows:

1. Section 11 is hereby amended by the substitution for subsection (1) of the following subsection:

"(1) A member of the Board shall, subject to the provisions of section 28A of the Act, be appointed by the Minister for such period, not exceeding three years, as he may determine: Provided that no person of or over the age of 68 years shall be appointed as a member.".

2. Section 25 is hereby amended by the addition of the following paragraph after paragraph (b):

"(c) (i) a committee or organisation established or instituted by the South African Agricultural Union to promote any branch of the canning fruit industry;

(ii) any organisation instituted to promote any branch of the canning fruit industry and affiliated with the said Union or a provincial agricultural union:

Provided that the control board shall not grant such assistance to such a committee or organisation unless the committee or organisation has, through and with the approval of the said South African Agricultural Union, made representations therefor to such board.".

3. Section 43 is hereby amended by the substitution for the words "two hundred" and "six" of the words "one thousand" and "twelve" respectively.

No. R. 154, 1980

DROËBONESKEMA —WYSIGING

Nademaal die Minister van Landbou en Visserye kragtens artikel 9 (2) (c), saamgelees met artikel 15 (3), van die Bemarkingswet, 1968 (Wet 59 van 1968), die voorgestelde wysiging in die Bylae hiervan uiteengesit, van die Droëboneskema afgekondig by Proklamasie R. 68 van 1961, soos gewysig, aangeneem het, en kragtens artikel 12 (1) (b) van genoemde Wet goedkeuring van die voorgestelde wysiging aanbeveel het;

So is dit dat ek kragtens die bevoegdheid my verleen by artikel 14 (1) (a), saamgelees met die genoemde artikel 15 (3) van genoemde Wet, hierby verklaar dat die genoemde wysiging op die datum van publikasie hiervan in werking tree.

Gegee onder my Hand en die Seël van die Republiek van Suid-Afrika te Durban, op hede die Agste dag van Augustus Eenduisend Negehonderd-en-tagtig.

M. VILJOEN, Staatspresident.

Op las van die Staatspresident-in-rade:

H. S. J. SCHOEMAN.

BYLAE

Die Droëboneskema, afgekondig by Proklamasie R. 68 van 1961, soos gewysig, word hierby verder soos volg gewysig:

1. Artikel 7 word hierby gewysig deur subartikel (1) deur die volgende subartikel te vervang:

"(1) 'n Lid van die Raad word, behoudens die bepalings van artikel 28A van die Wet, deur die Minister aangestel vir die tydperk wat hy bepaal,

No. R. 154, 1980

DRIED BEAN SCHEME.—AMENDMENT

Whereas the Minister of Agriculture and Fisheries has, in terms of section 9 (2) (c), read with section 15 (3), of the Marketing Act, 1968 (Act 59 of 1968), accepted the proposed amendment as set out in the Schedule hereto, to the Dried Bean Scheme, published by Proclamation R. 68 of 1961, as amended, and has, in terms of section 12 (1) (b) of the said Act, recommended the approval of the proposed amendment;

Now therefore, under the powers vested in me by section 14 (1) (a), read with the said section 15 (3) of the said Act, I hereby declare that the said amendment shall come into operation on the date of publication hereof.

Given under my Hand and the Seal of the Republic of South Africa at Durban this Eighth day of August, One thousand Nine hundred and Eighty.

M. VILJOEN, State President.

By Order of the State President-in-Council:

H. S. J. SCHOEMAN.

SCHEDULE

The Dried Bean Scheme, published by Proclamation R. 68 of 1961, as amended, is hereby further amended as follows:

1. Section 7 is hereby amended by the substitution for subsection (1) of the following subsection:

"(1) A member of the Board shall, subject to the provisions of section 28A of the Act, be appointed by the Minister for such period, not exceeding three

University of Pretoria
Together in Excellence

maar van hoogstens drie jaar: Met dien verstande dat geen persoon wat 68 jaar of ouer is as lid aangestel mag word nie.".

2. Artikel 14 word hierby gewysig—

(a) deur in paragraaf (c) die woorde wat die voorbehoudsbepaling voorafgaan, deur die volgende woorde te vervang:

"(c) onderworpe aan die goedkeuring van die Minister en die voorwaardes deur hom goedgekeur, die agente aan te stel wat die Raad nodig ag vir die behoorlike verrigting van sy werksaamhede:"; en

(b) deur paragraaf (i) deur die volgende paragraaf te vervang:

"(i) met die Minister se goedkeuring, deur middel van toekenning of lening of op 'n ander wyse bystand te verleen—

(i) aan enige onderneming vir die bewaring, verwerking, vervaardiging, opberging of bewerking van droëbone of iets wat van droëbone verkry word;

(ii) in verband met navorsingswerk met betrekking tot die verbetering, produksie, vervaardiging, verwerking, opberging of bemarking van droëbone of van iets waarvan droëbone verkry word of van iets wat van droëbone verkry word;

(iii) aan—

(aa) 'n komitee of organisasie wat deur die Suid-Afrikaanse Landbou-unie ingestel of in die lewe geroep is om die een of ander vertakking van die droëbone bedryf te bevorder; en

(bb) 'n organisasie wat in die lewe geroep is om die een of ander vertakking van die droëbonebedryf te bevorder en by genoemde Unie of 'n provinsiale landbou-unie geaffilieer is:

Met dien verstande dat die Raad nie sodanige bystand aan so 'n komitee of organisasie verleen nie, tensy dié komitee of organisasie deur middel van en met die goedkeuring van genoemde Suid-Afrikaanse Landbou-unie vertoë daarvoor tot die Raad gerig het.".

3. Artikel 21 word hierby gewysig deur die uitdrukkings "tweehonderd rand" en "ses maande" deur die uitdrukkings "eenduisend rand" en "twaalf maande" respektiewelik te vervang.

No. R. 155, 1980

DROËVRUGTESKEMA.—WYSIGING

Nademaal die Minister van Landbou en Visserye, kragtens artikel 9 (2) (c) saamgelees met artikel 15 (3) van die Bemarkingswet, 1968 (Wet 59 van 1968), die voorgestelde wysiging in die Bylae hiervan uiteengesit, van die Droëvrugteskema afgekondig by Proklamasie R. 302 van 1962, soos gewysig, aangeneem het, en kragtens artikel 12 (1) (b) van genoemde Wet goedkeuring van die voorgestelde wysiging aanbeveel het;

So is dit dat ek kragtens die bevoegdheid my verleen by artikel 14 (1) (a) saamgelees met die genoemde artikel 15 (3) van genoemde Wet, hierby verklaar dat die genoemde wysiging op die datum van publikasie hiervan in werking tree.

Gegee onder my Hand en die Seël van die Republiek van Suid-Afrika te Durban, op hede die Agtste dag van Augustus Eenduisend Negehonderd-en-tagtig.

M. VILJOEN, Staatspresident.

Op las van die Staatspresident-in-rade:

H. S. J. SCHOEMAN.

years, as he may determine: Provided that no person of or over the age of 68 years shall be appointed as a member.".

2. Section 14 is hereby amended—

(a) by the substitution in paragraph (c) for the words preceding the proviso of the following words:

"(c) to appoint, subject to the approval of the Minister and the conditions approved by him, such agents as it may consider necessary for the proper performance of its functions:"; and

(b) by the substitution for paragraph (i) of the following paragraph:

"(i) to assist, with the approval of the Minister, by grant or loan or in any other manner—

(i) any undertaking for preserving, processing, manufacturing, storing or conditioning dried beans or anything which is derived from dried beans;

(ii) research work relating to the improvement, production, manufacture, processing, storing or marketing of dried beans or of anything from which dried beans is derived or of anything which is derived from dried beans;

(iii) (aa) a committee or organisation established or instituted by the South African Agricultural Union to promote any branch of the dried bean industry; and

(bb) any organisation instituted to promote any branch of the dried bean industry and affiliated with the said Union or a provincial agricultural union:

Provided that the Board shall not grant such assistance to such a committee or organisation unless the committee has, through and with the approval of the said South African Agricultural Union, made representations therefor to the Board.".

3. Section 21 is hereby amended by the substitution for the expression "two hundred rand" and "six months" of the expressions "one thousand rand" and "twelve months" respectively.

No. R. 155, 1980

DRIED FRUIT SCHEME.—AMENDMENT

Whereas the Minister of Agriculture has, in terms of section 9 (2) (c), read with section 15 (3) of the Marketing Act, 1968 (Act 59 of 1968), as amended, accepted the proposed amendment of the Dried Fruit Scheme, published by Proclamation R. 302 of 1962, as amended, as set out in the Schedule hereto, and has in terms of section 12 (1) (b) of the said Act, recommended the approval of the proposed amendment;

Now, therefore, under the powers vested in me by section 14 (1) (a), read with the said section 15 (3) of the said Act, I hereby declare that the said amendment shall come into operation on the date of publication hereof.

Given under my Hand and the Seal of the Republic of South Africa at Durban this Eighth day of August, One thousand Nine hundred and Eighty.

M. VILJOEN, State President.

By Order of the State President-in-Council:

H. S. J. SCHOEMAN.

University of Fort Hare
Together in Excellence

BYLAE

Die Droëvrugteskema, afgekondig by Proklamasie R. 302 van 1962, soos gewysig, word hierby verder soos volg gewysig:

1. Artikel 8 word hierby gewysig deur subartikel (1) deur die volgende subartikel te vervang:

"(1) 'n Lid van die Raad word behoudens die bepalings van artikel 28A van die Wet deur die Minister aangestel vir die tydpe k wat hy bepaal maar van hoogstens drie jaar: Met dien verstande dat geen persoon wat 68 jaar of ouer is as lid aangestel mag word nie.".

2. Artikel 16 word hierby gewysig deur—

(a) die woorde wat die voorbehoudsbepaling in paragraaf (b) voorafgaan, deur die volgende woorde te vervang:

"(b) om, onderworpe aan die goedkeuring van die Minister en die voorwaardes deur hom goedgekeur, die agente aan te stel wat die Raad nodig ag vir die behoorlike verrigting van sy werksaamhede:"; en

(b) subartikel (g) deur die volgende subartikel te vervang:

"(g) om deur middel van toekenning of lening of op 'n ander wyse hulp te verleen—

(i) in verband met navorsingswerk met betrekking tot die verbetering, produksie en verwerking van droëvrugte; en

(ii) aan—

(aa) 'n komitee of organisasie wat deur die Suid-Afrikaanse Landbou-unie ingestel of in die lewe geroep is om die een of ander vertakking van die droëvrugtebedryf te bevorder; en

(bb) 'n organisasie wat in die lewe geroep is om die een of ander vertakking van die droëvrugtebedryf te bevorder en by genoemde Unie of 'n provinsiale landbou-unie geaffilieer is:

Met dien verstande dat die Raad nie sodanige bystand aan so 'n komitee of organisasie verleen nie, tensy dié komitee of organisasie deur middel van en met die goedkeuring van genoemde Suid-Afrikaanse Landbou-unie vertoë daarvoor tot die Raad gerig het.".

3. Artikel 23 word hierby gewysig deur die volgende subartikel ná subartikel (2) in te voeg:

"(2A) Indien enige hoeveelheid van die droëvrugte wat die Raad vir rekening van die poel ontvang het (met inbegrip van enige hoeveelheid droëvrugte wat kragtens hierdie subartikel na daardie poel oorgedra is) nog nie verkoop is nie op 'n tydstip deur die Raad bepaal, kan die Raad sodanige hoeveelheid oordra na enige latere poel, waarvan die netto opbrengs nog nie kragtens subartikel (3) verdeel is nie, teen 'n bedrag vir die krediet van eersgenoemde poel en die debiet van laasgenoemde poel as wat die Raad met die goedkeuring van die Minister bepaal: Met dien verstande dat die hoeveelheid droëvrugte wat aldus oorgedra word sover moontlik na 'n poel vir 'n ooreenstemmende klas of groep klasse, na gelang van die geval, oorgedra moet word, tensy die Raad met die goedkeuring van die Minister, anders bepaal.".

4. Artikel 26 word gewysig deur die woorde "tweehonderd" en "ses" deur die woorde "eenduisend" en "twaalf", onderskeidelik, te vervang.

SCHEDULE

The Dried Fruit Scheme, published by Proclamation R. 302 of 1962, as amended, is hereby further amended as follows:

1. Section 8 is hereby amended by the substitution for subsection (1) of the following subsection:

"(1) A member of the Board shall, subject to the provisions of section 28A of the Act be appointed by the Minister for such period, not exceeding three years, as he may determine: Provided that no person of or over the age of 68 years shall be appointed as a member.".

2. Section 16 is hereby amended by—

(a) the substitution in paragraph (b) for the words preceding the proviso of the following words:

"(b) to appoint, subject to the approval of the Minister and the conditions approved by him, such agents as the Board may consider necessary for the proper performance of its functions."; and

(b) by the substitution for paragraph (g) of the following paragraph:

"(g) to assist, by grant or loan or in any other manner—

(i) research work relating to the improvement, production, or processing of dried fruit; and

(ii) (aa) a committee or organisation established or instituted by the South African Agricultural Union to promote any branch of the dried fruit industry;

(bb) any organisation instituted to promote any branch of the dried fruit industry and affiliated with the said Union or a provincial agricultural union:

Provided that the Board shall not grant such assistance to such a committee or organisation unless the committee or organisation has, through and with the approval of the said South African Agricultural Union, made representations therefor to the Board.".

3. Section 23 is hereby amended by the insertion of the following subsection after subsection (2):

"(2A) If any quantity of dried fruit which has been received by the Board for the account of a pool (including any quantity carried over to that pool under this subsection) is not sold at a point of time determined by the Board, the Board may carry over such quantity to any later pool, of which the net proceedings has not yet been distributed in terms of subsection (3), for the credit of the former pool and the debit of the latter pool at an amount determined by the Board with the approval of the Minister: Provided that the quantity so carried over shall, as far as possible, as the case may be, be carried over to a pool for a corresponding class or a group of classes, unless the Board determines otherwise with the approval of the Minister.".

4. Section 26 is hereby amended by the substitution for the words "two hundred" and "six" of the words "one thousand" and "twelve" respectively.

University of Free State
Bloemfontein

No. R. 156, 1980

SIGOREISKEMA.—WYSIGING

Nademaal die Minister van Landbou en Visserye kragtens artikel 9 (2) (c), saamgelees met artikel 15 (3) van die Bemarkingswet, 1968 (Wet 59 van 1968), soos gewysig, die voorgestelde wysiging, in die Bylae hiervan uiteengesit, van die Sigoreiskema, afgekondig by Proklamasie R. 155 van 1978, aangeneem het en kragtens artikel 12 (1) (b) van genoemde Wet, goedkeuring van die voorgestelde wysiging aanbeveel het;

So is dit dat ek, kragtens die bevoegdheid my verleen by artikel 14 (1) (a), saamgelees met die genoemde artikel 15 (3), van genoemde Wet, hierby verklaar dat genoemde wysiging op datum van publikasie hiervan in werking tree.

Gegee onder my Hand en die Seël van die Republiek van Suid-Afrika te Durban, op hede die Agtste dag van Augustus Eenduisend Negehonderd-en-tagtig.

M. VILJOEN, Staatspresident.

Op las van die Staatspresident-in-rade:

H. S. J. SCHOEMAN.

BYLAE

Die Sigoreiskema, afgekondig by Proklamasie R. 155 van 1978, word hiermee soos volg gewysig:

1. Artikel 8 word hierby gewysig deur subartikel (1) deur die volgende subartikel te vervang:

"(1) 'n Lid van die Raad word, behoudens die bepalings van artikel 28A van die Wet, deur die Minister aangestel vir die tydperk wat hy bepaal, maar van hoogstens drie jaar: Met dien verstande dat geen persoon wat 68 jaar of ouer is as lid aangestel mag word nie.".

2. Artikel 16 word hierby gewysig deur die byvoeging van die volgende paragraaf na paragraaf (b):

"(c) aan—

(i) 'n komitee of organisasie wat deur die Suid-Afrikaanse Landbou-unie ingestel of in die lewe geroep is om die een of ander vertakking van die sigoreibedryf te bevorder; en

(ii) 'n organisasie wat in die lewe geroep is om die een of ander vertakking van die sigoreibedryf te bevorder en by genoemde Unie of 'n provinsiale landbou-unie geaffilieer is:

Met dien verstande dat die Raad nie sodanige bystand aan so 'n komitee of organisasie verleen nie, tensy die komitee of organisasie deur middel van en met die goedkeuring van genoemde Suid-Afrikaanse Landbou-unie vertoë daarvoor tot die Raad gerig het.".

3. Artikel 29 word hierby gewysig deur subartikel (1) deur die volgende subartikel te vervang:

"(1) Die Raad kan, onderworpe aan die goedkeuring van die Minister en die voorwaardes deur hom goedgekeur, die agente aanstel wat die Raad nodig ag vir die behoorlike verrigting van sy werksaamhede.".

4. Artikel 36 word hierby gewysig deur die uitdrukking "R200" deur die uitdrukking "R1 000" en die uitdrukking "ses maande" deur die uitdrukking "12 maande" te vervang.

No. R. 157, 1980

SYBOKHAARSKEMA.—WYSIGING

Nademaal die Minister van Landbou en Visserye, kragtens artikel 9 (2) (c), saamgelees met artikel 15 (3), van die Bemarkingswet, 1968 (Wet 59 van 1968),

No. R. 156, 1980

CHICORY SCHEME.—AMENDMENT

Whereas the Minister of Agriculture and Fisheries has, in terms of section 9 (2) (c), read with section 15 (3) of the Marketing Act, 1968 (Act 59 of 1968), as amended, accepted the proposed amendment of the Chicory Scheme, published by Proclamation R. 155 of 1978, as set out in the Schedule hereto, and has in terms of section 12 (1) (b) of the said Act, recommended the approval of the proposed amendment;

Now, therefore, under the powers vested in me by section 14 (1) (a), read with the said section 15 (3), of the said Act, I hereby declare that the said amendment shall come into operation on the date of publication hereof.

Given under my Hand and the Seal of the Republic of South Africa at Durban this Eighth day of August, One thousand Nine hundred and Eighty.

M. VILJOEN, State President.

By Order of the State President-in-Council:

H. S. J. SCHOEMAN.

SCHEDULE

The Chicory Scheme, published by Proclamation R. 155 of 1978, is hereby amended as follows:

1. Section 8 is hereby amended by the substitution for subsection (1) of the following subsection:

"(1) A member of the Board shall, subject to the provisions of section 28A of the Act, be appointed by the Minister for such period, not exceeding three years, as he may determine: Provided that no person of or over the age of 68 years shall be appointed as a member.".

2. Section 16 is hereby amended by the addition of the following paragraph after paragraph (b):

"(c) (i) a committee or organisation established or instituted by the South African Agricultural Union to promote any branch of the chicory industry;

(ii) any organisation instituted to promote any branch of the chicory industry and affiliated with the said Union or a provincial agricultural union:

Provided that the Board shall not grant such assistance to such a committee or organisation unless the committee or organisation has, through and with the approval of the said South African Agricultural Union, made representations therefor to the Board.".

3. Section 29 is hereby amended by the substitution for subsection (1) of the following subsection:

"(1) The Board may, subject to the approval of the Minister and the conditions approved by him, appoint such agents as it may consider necessary for the proper performance of its functions.".

4. Section 36 is hereby amended by the substitution for the expression "R200" of the expression "R1 000" and for the expression "six months" of the expression "12 months".

No. R. 157, 1980

MOHAIR SCHEME.—AMENDMENT

Whereas the Minister of Agriculture and Fisheries has, in terms of section 9 (2) (c), read with section 15 (3), of the Marketing Act, 1968 (Act 59 of 1968),

die voorgestelde wysiging in die Bylae hiervan uiteengesit, van die Sybokhaarskema, afgekondig by Proklamasie R. 281 van 1971, soos gewysig, aangeneem het, en kragtens artikel 12 (1) (b) van genoemde Wet goedkeuring van die voorgestelde wysiging aanbeveel het;

So is dit dat ek kragtens die bevoegdheid my verleen by artikel 14 (1) (a), saamgelees met die genoemde artikel 15 (3) van genoemde Wet, hierby verklaar dat die genoemde wysiging op die datum van publikasie hiervan in werking tree.

Gegee onder my Hand en die Seël van die Republik van Suid-Afrika te Durban, op hede die Agste dag van Augustus Eenduisend Negehonderd-en-tagtig.

M. VILJOEN, Staatspresident.

Op las van die Staatspresident-in-rade:

H. S. J. SCHOEMAN.

BYLAE

Die Sybokhaarskema, afgekondig by Proklamasie R. 281 van 1971, soos gewysig, word hierby verder soos volg gewysig:

1. Artikel 10 word hierby gewysig deur subartikel (1) deur die volgende subartikel te vervang:

"(1) 'n Lid van die Raad word, behoudens die bepalings van artikel 28A van die Wet deur die Minister aangestel vir die tydperk wat hy bepaal, maar van hoogstens drie jaar: Met dien verstande dat geen persoon wat 68 jaar of ouer is as lid aangestel mag word nie.".

2. Artikel 19 word hierby gewysig deur na paragraaf (b) die volgende paragraaf by te voeg:

"(c) aan—

(i) 'n Komitee of organisasie wat deur die Suid-Afrikaanse Landbou-unie ingestel of in die lewe geroep is om die een of ander vertakking van die landboubedryf te bevorder; en

(ii) 'n organisasie wat in die lewe geroep is om die een of ander vertakking van die landboubedryf te bevorder en by genoemde Unie of 'n provinsiale landbou-unie geaffilieer is:

Met dien verstande dat die Raad nie sodanige bystand aan so 'n komitee of organisasie verleen nie, tensy dié komitee of organisasie deur middel van en met die goedkeuring van genoemde Suid-Afrikaanse Landbou-unie vertoë daarvoor tot dié Raad gerig het.".

3. Artikel 32 word hierby gewysig deur subartikel (1) deur die volgende subartikel te vervang:

"(1) Die Raad kan, onderworpe aan die goedkeuring van die Minister en die voorwaardes deur hom goedgekeur, die agente aanstel wat die Raad nodig ag vir die behoorlike verrigting van sy werksaamhede.".

4. Artikel 38 word hierby gewysig deur die uitdrukkings "R200" en "ses maande" te vervang deur die uitdrukkings "R1 000" en "twaalf maande" onderskeidelik.

No. R. 158, 1980

KATOENSKEMA.—WYSIGING

Nademaal die Minister van Landbou en Visserye kragtens artikel 9 (2) (c), saamgelees met artikel 15 (3), van die Bemarkingswet, 1968 (Wet 59 van 1968), die voorgestelde wysiging in die Bylae hiervan uiteengesit, van die Katoenskema afgekondig by Proklamasie R. 37 van 1974, soos gewysig, aangeneem het, en kragtens artikel 12 (1) (b) van genoemde Wet goedkeuring van die voorgestelde wysiging aanbeveel het;

accepted the proposed amendment as set out in the Schedule hereto, to the Mohair Scheme, published by Proclamation R. 281 of 1971, as amended, and has, in terms of section 12 (1) (b) of the said Act, recommended the approval of the proposed amendment;

Now, therefore, under the powers vested in me by section 14 (1) (a), read with the said section 15 (3) of the said Act, I hereby declare that the said amendment shall come into operation on the date of publication hereof.

Given under my Hand and the Seal of the Republic of South Africa at Durban this Eighth day of August, One thousand Nine hundred and Eighty.

M. VILJOEN, State President.

By Order of the State President-in-Council:

H. S. J. SCHOEMAN.

SCHEDULE

The Mohair Scheme, published by Proclamation R. 281 of 1971, as amended, is hereby further amended as follows:

1. Section 10 is hereby amended by the substitution for subsection (1) of the following subsection:

"(1) A member of the Board shall, subject to the provisions of section 28A of the Act, be appointed by the Minister for such period, not exceeding three years, as he may determine: Provided that no person of or over the age of 68 years shall be appointed as a member.".

2. Section 19 is hereby amended by the addition of the following paragraph after paragraph (b):

"(c) (i) a committee or organization established or instituted by the South African Agricultural Union to promote any branch of the agricultural industry;

(ii) any organization instituted to promote any branch of the agricultural industry and affiliated with the said Union or a provincial agricultural union:

Provided that the Board shall not grant such assistance to such a committee or organization unless the committee or organization has, through and with the approval of the said South African Agricultural Union, made representations therefor to the Board.".

3. Section 32 is hereby amended by the substitution for subsection (1) of the following subsection:

"(1) The Board may, subject to the approval of the Minister and the conditions approved by him, appoint such agents as it may consider necessary for the proper performance of its functions.".

4. Section 38 is hereby amended by the substitution for the expressions "R200" and "six months" of the expressions "R1 000" and "twelve months" respectively.

No. R. 158, 1980

COTTON SCHEME.—AMENDMENT

Whereas the Minister of Agriculture and Fisheries has, in terms of section 9 (2) (c), read with section 15 (3), of the Marketing Act, 1968 (Act 59 of 1968), accepted the proposed amendment as set out in the Schedule hereto, to the Cotton Scheme, published by Proclamation R. 37 of 1974, as amended, and has, in terms of section 12 (1) (b) of the said Act, recommended the approval of the proposed amendment;

University of Pretoria
Together in Excellence

So is dit dat ek kragtens die bevoegdheid my verleen by artikel 14 (1) (a), saamgelees met die genoemde artikel 15 (3) van genoemde Wet, hierby verklaar dat die genoemde wysiging op die datum van publikasie hiervan in werking tree.

Gegee onder my Hand en die Seël van die Republiek van Suid-Afrika te Durban, op hede die Agtste dag van Augustus Eenduisend Negehonderd-en-tagtig.

M. VILJOEN, Staatspresident.

Op las van die Staatspresident-in-rade:

H. S. J. SCHOEMAN.

BYLAE

Die Katoenskema, afgekondig by Proklamasie R. 37 van 1974, soos gewysig, word hierby soos volg verder gewysig:

1. Artikel 10 word hierby gewysig deur subartikel (1), deur die volgende subartikel te vervang:

"(1) 'n Lid van die Raad word, behoudens die bepalings van artikel 28A van die Wet, deur die Minister aangestel vir die tydperk wat hy bepaal, maar van hoogstens drie jaar: Met dien verstande dat geen persoon wat 68 jaar of ouer is as lid aangestel mag word nie.".

2. Artikel 19 word hierby gewysig deur die volgende paragraaf na paragraaf (b) by the voeg:

"(c) aan—

(i) 'n komitee of organisasie wat deur die Suid-Afrikaanse Landbou-unie ingestel of in die lewe geroep is om die een of ander vertakking van die katoenbedryf te bevorder; en

(ii) 'n organisasie wat in die lewe geroep is om die een of ander vertakking van die katoenbedryf te bevorder en by genoemde Unie of 'n provinsiale landbou-unie geaffilieer is:

Met dien verstande dat die Raad nie sodanige bystand aan 'n komitee of organisasie verleen nie, tensy dié komitee of organisasie deur middel van en met die goedkeuring van genoemde Suid-Afrikaanse Landbou-unie vertoë daarvoor tot die Raad gerig het.".

3. Artikel 32 word hierby gewysig deur subartikel (1) deur die volgende subartikel te vervang:

"(1) Die Raad kan, onderworpe aan die goedkeuring van die Minister en die voorwaardes deur hom goedgekeur, die agente aanstel wat die Raad nodig ag vir die behoorlike verrigting van sy werksaamhede.".

4. Artikel 38 word hierby gewysig deur die uitdrukkings "R200" en "ses" deur die uitdrukkings "R1 000" en "twaalf" onderskeidelik te vervang.

Now, therefore, under the powers vested in me by section 14 (1) (a), read with the said section 15 (3) of the said Act, I hereby declare that the said amendment shall come into operation on the date of publication hereof.

Given under my Hand and the Seal of the Republic of South Africa at Durban this Eighth day of August, One thousand Nine hundred and Eighty.

M. VILJOEN, State President.

By Order of the State President-in-Council:

H. S. J. SCHOEMAN.

SCHEDULE

The Cotton Scheme, published by Proclamation R. 37 of 1974, as amended, is hereby further amended as follows:

1. Section 10 is hereby amended by the substitution for subsection (1) of the following subsection:

"(1) A member of the Board shall, subject to the provisions of section 28A of the Act, be appointed by the Minister for such period, not exceeding three years, as he may determine: Provided that no person of or over the age of 68 years shall be appointed as a member.".

2. Section 19 is hereby amended by the addition of the following paragraph after paragraph (b):

"(c) (i) a committee or organisation established or instituted by the South African Agricultural Union to promote any branch of the cotton industry;

(ii) any organisation instituted to promote any branch of the cotton industry and affiliated with the said Union or a provincial agricultural union:

Provided that the Board shall not grant such assistance to such a committee or organisation unless the committee or organisation has, through and with the approval of the said South African Agricultural Union, made representations therefor to the Board.".

3. Section 32 is hereby amended by the substitution for subsection (1) of the following subsection:

"(1) The Board may subject to the approval of the Minister and the conditions approved by him, appoint such agents as it may consider necessary for the proper performance of its functions.".

4. Section 38 is hereby amended by the substitution for the expressions "R200" and "six" of the expressions "R1 000" and "twelve" respectivley.

No. R. 159, 1980

WYSIGING VAN DIE EERSTE BYLAE BY DIE VERDEDIGINGSWET, 1957 (WET 44 VAN 1957)

Kragtens die bevoegdheid my verleen by artikel 104 (2) van die Verdedigingswet, 1957 (Wet 44 van 1957), wysig ek hierby die Eerste Bylae by die genoemde Wet soos in die Bylae hiertoe uiteengesit, en bepaal ek hierby dat die wysigings aan artikels 58 en 59 (1) van genoemde Eerste Bylae geag word op 1 Desember 1979 in werking te getree het.

No. R. 159, 1980

AMENDMENTS TO THE FIRST SCHEDULE TO THE DEFENCE ACT, 1957 (ACT 44 OF 1957)

Under the powers vested in me by section 104 (2) of the Defence Act, 1957 (Act 44 of 1957), I hereby amend the First Schedule to the said Act as set out in the Schedule hereto, and do I hereby determine that the amendments to sections 58 and 59 (1) of the said First Schedule shall be deemed to have come into operation on 1 December 1979.

Gegee onder my Hand en die Seël van die Republiek van Suid-Afrika te Pretoria, op hede die Vyftiende dag van Augustus Eenduisend Negehonderd-en-tagtig.

M. VILJOEN, Staatspresident.

Op las van die Staatspresident-in-rade:

P. W. BOTHA.

BYLAE

WYSIGING VAN DIE EERSTE BYLAE BY DIE VERDEDIGINGSWET, 1957 (WET 44 VAN 1957)

1. Artikel 1 van die Eerste Bylae by die Verdedigingswet, 1957 (Wet 44 van 1957), (hieronder die Bylae genoem), word hierby gewysig deur in subartikel (1) die omskrywing van "stafhoof" deur die volgende omskrywing te vervang:

" 'stafhoof' 'n offisier van rang en bevel nie laer as brigadier of die ekwivalent daarvan nie wat by bevelskrif gemagtig is om algemene krygsrade te belê, en in artikels 60A en 65A ook enige offisier van rang nie laer as genoemde rang nie wat deur so 'n stafhoof skriftelik gemagtig is om in enige besondere geval die bevoegdhede wat by onderskeidelik artikel 60A of 65A aan 'n stafhoof verleen word, uit te oefen;".

2. Artikel 58 van die Bylae word hierby gewysig deur die voorbehoudsbepaling deur die volgende voorbehoudsbepaling te vervang.

"Met dien verstande dat iemand wat weens 'n burgerlike halsmisdryf buite die Republiek deur hom gepleeg of 'n misdryf ingevolge artikel 4, 10, 13 of 29 van hierdie Reglement aangeklà word, te eniger tyd na die pleeg van die misdryf deur 'n militêre hof verhoor kan word.".

3. Artikel 59 van die Bylae word hierby gewysig deur subartikel (1) deur die volgende subartikel te vervang:

"(1) Iemand wat, terwyl hy aan hierdie Reglement onderworpe is, 'n misdryf pleeg ten opsigte waarvan 'n militêre hof regsbevoeg is, kan—

(a) in die geval waar daardie misdryf 'n burgerlike halsmisdryf buite die Republiek gepleeg of 'n misdryf ingevolge artikel 4, 10, 13 of 29 is, te eniger tyd nadat hy opgehou het om aldus onderworpe te wees, weens daardie misdryf deur daardie militêre hof verhoor en gestraf word; en

(b) in die geval waar daardie misdryf 'n ander misdryf is as een in paragraaf (a) bedoel, te eniger tyd binne 'n tydperk van drie maande nadat hy opgehou het om aan hierdie reglement onderworpe te wees, maar behoudens die bepalings van artikel 58, weens daardie misdryf deur daardie militêre hof verhoor en gestraf word.".

4. Artikel 145 van die Bylae word hierby gewysig deur subartikel (1) deur die volgende subartikel te vervang:

"(1) Die Minister stel 'n hersieningsraad in wat saamgestel is—

(a) in aangeleenthede waar 'n halsmisdryf betrokke is, uit drie regters of afgetrede regters van die Hooggeregshof van Suid-Afrika (van wie een deur die Minister tot voorsitter benoem word), een offisier van die Staande Mag en een persoon wat ondervinding in die Suid-Afrikaanse Weermag in krygsdiens te velde het; en

Given under my Hand and the Seal of the Republic of South Africa at Pretoria this Fifteenth day of August, One thousand Nine hundred and Eighty.

M. VILJOEN, State President.

By Order of the State President-in-Council:

P. W. BOTHA.

SCHEDULE

AMENDMENTS TO THE FIRST SCHEDULE TO THE DEFENCE ACT, 1957 (ACT 44 OF 1957)

1. Section 1 of the First Schedule to the Defence Act, 1957 (hereinafter referred to as the Schedule), is hereby amended by the substitution in subsection (1) for the definition of "chief of staff" of the following definition:

" 'chief of staff' means any officer of rank and command not below that of a brigadier or its equivalent who has been empowered by warrant to convene general courts martial, and in sections 60A and 65A includes any officer of rank not below the said rank who has been empowered in writing by such chief of staff to exercise in any particular case the powers conferred upon a chief of staff by section 60A or 65A, respectively;".

2. Section 58 of the Schedule is hereby amended by the substitution for the proviso of the following proviso:

"Provided that a person charged with a capital civil offence committed by him outside the Republic or an offence under section 4, 10, 13 or 29 of this Code may be tried by a military court at any time after the commission of the offence.".

3. Section 59 of the Schedule is hereby amended by the substitution for subsection (1) of the following subsection:

"(1) Any person who, while he is subject to this Code, commits an offence in respect of which a military court has jurisdiction, may—

(a) in the case where that offence is a capital civil offence committed outside the Republic or an offence under section 4, 10, 13 or 29, be tried and punished for that offence by that military court at any time after he has ceased to be so subject; and

(b) in the case where that offence is an offence other than one contemplated in paragraph (a), but subject to the provisions of section 58, be tried and punished for that offence by that military court at any time within a period of three months after he has ceased to be subject to this Code.".

4. Section 145 of the Schedule is hereby amended by the substitution for subsection (1) of the following subsection:

"(1) The Minister shall establish a council of review constituted—

(a) in matters where a capital offence is involved, of three judges or retired judges of the Supreme Court of South Africa (one of whom shall be appointed as chairman by the Minister), one officer of the Permanent Force and one person who has had experience in the field on service; and

(b) in ander aangeleenthede, uit—

(i) 'n voorsitter wat 'n regter of afgetrede regter van die Hooggeregshof van Suid-Afrika is, een offisier van die Staande Mag en een persoon wat ondervinding in die Suid-Afrikaanse Weermag in krygsdiens te velde het; of

(ii) 'n voorsitter wat 'n magistraat of afgetrede magistraat is wat daardie amp beklee het vir 'n ononderbroke tydperk van minstens 10 jaar, een offisier van die Staande Mag en een persoon wat ondervinding in die Suid-Afrikaanse Weermag in krygsdiens te velde het, na gelang die Adjudant-generaal na goeddunke bepaal dat 'n besondere aangeleentheid voor die hersieningsraad soos ooreenkomstig subparagraaf (i) of subparagraaf (ii) saamgestel, moet dien.".

(b) in other matters, of—

(i) a chairman who shall be a judge or a retired judge of the Supreme Court of South Africa, one officer of the Permanent Force and one person who has had experience in the South African Defence Force in the field on service; or

(ii) a chairman who shall be a magistrate or retired magistrate who has held that office for a continuous period of not less than 10 years, one officer of the Permanent Force and one person who has had experience in the South African Defence Force in the field on service, according as the Adjudant-general in his discretion determines that any particular matter shall serve before the council of review as constituted in accordance with subparagraph (i) or subparagraph (ii).".

GOEWERMENTSKENNISGEWINGS

DEPARTEMENT VAN FINANSIES

No. R. 1783 29 Augustus 1980

DOEANE- EN AKSYNSWET, 1964

WYSIGING VAN BYLAE 1 (No. 1/1/705)

Kragtens artikel 48 van die Doeane- en Aksynswet, 1964, word Deel 1 van Bylae 1 by genoemde Wet hierby gewysig in die mate in die Bylae hiervan aangetoon.

P. T. C. DU PLESSIS, Adjunk-minister van Finansies.

GOVERNMENT NOTICES

DEPARTMENT OF FINANCE

No. R. 1783 29 August 1980

CUSTOMS AND EXCISE ACT, 1964

AMENDMENT OF SCHEDULE 1 (No. 1/1/705)

Under section 48 of the Customs and Excise Act, 1964, Part 1 of Schedule 1 to the said Act is hereby amended to the extent set out in the Schedule hereto.

P. T. C. DU PLESSIS, Deputy Minister of Finance.

University of Pretoria
Tuguelpier in Excellentia

BYLAE

I Tariefpos	II Statistiese Eenheid	III Skaal van Reg Algemeen	IV Skaal van Reg M.B.N.
84.62 Deur na subpos No. 84.62.60.15 die volgende in te voeg:			
„.20 Voltooide buiteringe, met 'n buitedeursnee van minstens 195 mm maar hoogstens 196 mm of met 'n buitedeursnee van minstens 207 mm maar hoogstens 209 mm, vir rollaers in subpos No. 84.62.25.20 vermeld	getal	20%	
.30 Voltooide binneringe, met 'n binnedeursnee van minstens 119 mm maar hoogstens 120 mm of met 'n binnedeursnee van minstens 131 mm maar hoogstens 132 mm, vir rollaers in subpos No. 84.62.25.20 vermeld	getal	20%"	

Opmerking.—Die uitwerking van hierdie kennisgewing is dat die skaal van reg op sekere ringe vir sekere astaprollaers, van 3% na 20% verhoog word.

SCHEDULE

I Tariff Heading	II Statistical Unit	III Rate of Duty General	IV Rate of Duty M.F.N.
84.62 By the insertion after subheading No. 84.62.60.15 of the following:			
".20 Finished outer rings, with an outside diameter of 195 mm or more but not exceeding 196 mm or with an outside diameter of 207 mm or more but not exceeding 209 mm, for roller bearings specified in subheading No. 84.62.25.20	no.	20%	
.30 Finished inner rings, with an inside diameter of 119 mm or more but not exceeding 120 mm or with an inside diameter of 131 mm or more but not exceeding 132 mm, for roller bearings specified in subheading No. 84.62.25.20	no.	20%"	

Note.—The effect of this notice is that the rate of duty on certain rings for certain journal roller bearings, is increased from 3% to 20%.

No. R. 1781 29 Augustus 1980

DOEANE- EN AKSYNSWET, 1964

WYSIGING VAN BYLAE 1 (No. 1/1/703)

Kragtens artikel 48 van die Doeane- en Aksynswet, 1964, word Deel 1 van Bylae 1 by genoemde Wet hierby gewysig in die mate in die Bylae hiervan aangetoon.

P. T. C. DU PLESSIS, Adjunk-minister van Finansies.

No. R. 1781 29 August 1980

CUSTOMS AND EXCISE ACT, 1964

AMENDMENT OF SCHEDULE 1 (No. 1/1/703)

Under section 48 of the Customs and Excise Act, 1964, Part 1 of Schedule 1 to the said Act is hereby amended to the extent set out in the Schedule hereto.

P. T. C. DU PLESSIS, Deputy Minister of Finance.

BYLAE

I Tariefpos	II Statistiese Eenheid	III Skaal van Reg Algemeen	IV M.B.N.
65.06 Deur subpos No. 65.06.40 deur die volgende te vervang: „65.06.40 Valhelms: .10 Volgesig	getal	30% of 800c elk	
.90 Ander	getal	30%"	

Opmerking.—Spesifieke voorsiening word gemaak vir volgesigvalhelms en die skaal van reg daarop word van 30% na 30% of 800c elk gewysig.

SCHEDULE

I Tariff Heading	II Statistical Unit	III Rate of Duty General	IV M.F.N.
65.06 By the substitution for subheading No. 65.06.40 of the following "65.06.40 Crash helmets: .10 Full-face	no.	30% or 800c each	
.90 Other	no.	30%"	

Note.—Specific provision is made for full-face crash helmets and the rate of duty thereon is amended from 30% to 30% or 800c each.

IN LUMINE TUO VIDEBIMUS LUMEN
University of Fort Hare
Together in Excellence

No. R. 1782 29 Augustus 1980

DOEANE- EN AKSYNSWET, 1964

WYSIGING VAN BYLAE 1 (No. 1/1/704)

Kragtens artikel 48 van die Doeane- en Aksynswet, 1964, word Deel 1 van Bylae 1 by genoemde Wet hierby gewysig in die mate in die Bylae hiervan aangetoon.

P. T. C. DU PLESSIS, Adjunk-minister van Finansies.

No. R. 1782 29 August 1980

CUSTOMS AND EXCISE ACT, 1964

AMENDMENT OF SCHEDULE 1 (No. 1/1/704)

Under section 48 of the Customs and Excise Act, 1964, Part 1 of Schedule 1 to the said Act is hereby amended to the extent set out in the Schedule hereto.

P. T. C. DU PLESSIS, Deputy Minister of Finance.

BYLAE

I Tariefpos	II Statistiese Eenheid	III Skaal van Reg Algemeen	IV M.B.N.
73.40 Deur na subpos No. 73.40.25 die volgende in te voeg: „73.40.30 Lunspenne	getal	20% of 4c elk"	

Opmerking.—Spesifieke voorsiening word gemaak vir lunspenne van yster of staal en die skaal van reg daarop word van 20% na 20% of 4c elk gewysig.

SCHEDULE

I Tariff Heading	II Statistical Unit	III Rate of Duty General	IV M.F.N.
73.40 By the insertion after subheading No. 73.40.25 of the following: "73.40.30 Linch-pins	no.	20% or 4c each"	

Note.—Specific provision is made for linch-pins of iron or steel and the rate of duty thereon is amended from 20% to 20% or 4c each.

No. R. 1784 29 Augustus 1980

DOEANE- EN AKSYNSWET, 1964

WYSIGING VAN BYLAE 3 (No. 3/636)

Kragtens artikel 75 van die Doeane- en Aksynswet, 1964, word Bylae 3 by genoemde Wet hierby gewysig in die mate in die Bylae hiervan aangetoon.

P. T. C. DU PLESSIS, Adjunk-minister van Finansies.

No. R. 1784 29 August 1980

CUSTOMS AND EXCISE ACT, 1964

AMENDMENT OF SCHEDULE 3 (No. 3/636)

Under section 75 of the Customs and Excise Act, 1964, Schedule 3 to the said Act is hereby amended to the extent set out in the Schedule hereto.

P. T. C. DU PLESSIS, Deputy Minister of Finance.

BYLAE

I Item	II Tariefpos en Beskrywing	III Mate van Korting
306.01	Deur na tariefpos No. 28.30 die volgende in te voeg: „28.47 Natriummolibdaat, vir die vervaardiging van wynsteensuur, fumaarsuur en kremetart	Volle reg"
307.04	Deur na paragraaf (1) (vii) van tariefpos No. 39.02 die volgende in te voeg: „(viii) Tweeasig-georiënteerd, vir die vervaardiging van bottelkapsules	Volle reg"

Opmerking.—Voorsienings word gemaak vir 'n volle korting op reg op—

1. natriummolibdaat, vir die vervaardiging van wynsteensuur, fumaarsuur en kremetart, en
2. tweeasig-georiënteerde vinielchloriedpolimere en -kopolimere, in plate, velle, reep, film en folie, vir die vervaardiging van bottelkapsules.

SCHEDULE

I Item	II Tariff Heading and Description	III Extent of Rebate
306.01	By the insertion after tariff heading No. 28.30 of the following: "28.47 Sodium molybdate, for the manufacture of tartaric acid, fumaric acid and cream of tartar	Full duty"
307.04	By the insertion after paragraph (1) (vii) of tariff heading No. 39.02 of the following: "(viii) Biaxially oriented, for the manufacture of bottle capsules	Full duty"

Note.—Provisions are made for a rebate of the full duty on—

1. sodium molybdate, for the manufacture of tartaric acid, fumaric acid and cream of tartar, and
2. biaxially oriented vinyl chloride polymers and copolymers, in plates, sheets, strip, film and foil, for the manufacture of bottle capsules.

DEPARTEMENT VAN HANDEL EN VERBRUIKERSAKE

No. R. 1814 29 Augustus 1980

WET OP PRYSBEHEER, 1964

VOORWAARDES MET BETREKKING TOT BÊREKOOPOOREENKOMSTE

Ek, Elias George de Beer, Pryskontroleur, wysig hiermee Goewermentskennisgewing R. 1234 van 13 Junie 1980, uitgevaardig kragtens artikel 9 van die Wet op Prysbeheer, 1964 (Wet 25 van 1964), soos in die Bylae hierby uiteengesit.

E. G. DE BEER, Pryskontroleur.

DEPARTMENT OF COMMERCE AND CONSUMER AFFAIRS

No. R. 1814 29 August 1980

PRICE CONTROL ACT, 1964

CONDITIONS APPLICABLE TO LAY-BY AGREEMENTS

I, Elias George de Beer, Price Controller, do hereby amend Government Notice R. 1234 of 13 June 1980, promulgated in terms of section 9 of the Price Control Act, 1964 (Act 25 of 1964), as set out in the Schedule hereto.

E. G. DE BEER, Price Controller.

UNIVERSITY OF PRETORIA
IN LUMINE TUO VIDEBIMUS LUMEN
University of Pretoria
Together in Excellence

BYLAE

1. Regulasie 1.2.2. word hierby gewysig deur die invoeging tussen die woorde "lewering van die goedere aan die koper" en die woorde "na betaling van die deposito geskied", van die woorde "te enige tyd.".

2. Regulasie 3.4 van die regulasies word hierby deur die volgende regulasie vervang:

"3.4. die koper op aanvraag van 'n rekeningstaat voorsien waarin die volgende inligting vervat is—

3.4.1. die koopprys;

3.4.2. besonderhede van debiete en krediete op die rekening aangeteken; en

3.4.3. die balans verskuldig op die koopprys aan die einde van die normale rekeningkundige periode wat die datum van die rekeningstaat onmiddellik voorafgaan.".

3. Regulasie 9 word hierby gewysig deur die invoeging tussen die woorde ". . . . . onverwyld aan die koper" en die woorde "90 persent van alle gelde . . . ." van die woorde "ten minste".

4. Regulasie 12 word hierby gewysig—

4.1. deur die invoeging tussen die woorde ". . . . . die bêrekoopooreenkoms kanselleer, en", en die woorde "10 persent van alle gelde . . . . ." van die woorde " 'n maksimum van";

4.2. deur die woorde ". . . . van 90 persent . . . . ." te skrap.

SCHEDULE

1. Regulation 1.2.2. is hereby amended by the insertion between the words "delivery of the goods takes place" and the words "after payment of the deposit", of the words "at any time.".

2. The following regulation is hereby substituted for regulation 3.4. of the regulations:

"3.4. furnish the purchaser on demand with a statement containing the following information—

3.4.1. the purchase price;

3.4.2. details of all debits and credits entered on the account; and

3.4.3. the balance owing on the purchase price at the end of the normal accounting period immediately preceding the date of the statement. .

3. Regulation 9 is hereby amended by the insertion between the words ". . . . . refund to the purchaser", and the words "90 per cent of all moneys . . . ." of the words "at least".

4. Regulation 12 is hereby amended by—

4.1. by the insertion between the words ". . . . . cancel the lay-by agreement, and", and the words "10 per cent of all moneys . . . ." of the words "a maximum of";

4.2. by the deletion of the words ". . . . . of 90 per cent".

DEPARTEMENT VAN MANNEKRAGBENUTTING

No. R. 1818 29 Augustus 1980

WET OP NYWERHEIDSVERSOENING, 1956

ELEKTROTEGNIESE NYWERHEID (NATAL).—WYSIGING VAN SIEKTEBYSTANDSFONDSOOREENKOMS

Ek, Stephanus Petrus Botha, Minister van Mannekragbenutting, verklaar hierby, kragtens artikel 48 (1) (a) van die Wet op Nywerheidsversoening, 1956, dat die bepalings van die Ooreenkoms (hierna die Wysigingsooreenkoms genoem) wat in die Bylae hiervan verskyn en op die Elektrotegniese Nywerheid betrekking het, met ingang van die tweede Maandag na die datum van publikasie van hierdie kennisgewing en vir die tydperk wat op 29 Februarie 1984 eindig, bindend is vir die werkgewersorganisasies en die vakverenigings wat die Wysigingsooreenkoms aangegaan het en vir die werkgewers en die werknemers wat lede van genoemde organisasies of verenigings is.

S. P. BOTHA, Minister van Mannekragbenutting.

BYLAE

NYWERHEIDSRAAD VIR DIE ELEKTROTEGNIESE NYWERHEID (NATAL)

SIEKTEBYSTANDSFONDSOOREENKOMS

ingevolge die Wet op Nywerheidsversoening, 1956, gesluit deur en aangegaan tussen die

Electrical Engineering and Allied Industries Association

en die

Radio, Appliance and Television Association of South Africa

en die

Electrical Contractors' Association (South Africa)

(hierna die "werkgewers" of die "werkgewersorganisasie" genoem), aan die een kant, en die

South African Electrical Workers' Association

en die

Amalgamated Engineering Union

DEPARTMENT OF MANPOWER UTILISATION

No. R. 1818 29 August 1980

INDUSTRIAL CONCILIATION ACT, 1956

ELECTRICAL INDUSTRY (NATAL).—AMENDMENT OF SICK PAY FUND AGREEMENT

I, Stephanus Petrus Botha, Minister of Manpower Utilisation, hereby, in terms of section 48 (1) (a) of the Industrial Conciliation Act, 1956, declare that the provisions of the Agreement (hereinafter referred to as the Amending Agreement) which appears in the Schedule hereto and which relates to the Electrical Industry, shall be binding, with effect from the second Monday after the date of publication of this notice and for the period ending 29 February 1984, upon the employers' organisations and the trade unions which entered into the Amending Agreement and upon the employers and employees who are members of the said organisations or unions.

S. P. BOTHA, Minister of Manpower Utilisation,

SCHEDULE

INDUSTRIAL COUNCIL FOR THE ELECTRICAL INDUSTRY (NATAL)

SICK PAY FUND AGREEMENT

in accordance with the provisions of the Industrial Conciliation Act, 1956, made and entered into by and between the

Electrical Engineering and Allied Industries Association

and the

Radio, Appliance and Television Association of South Africa

and the

Electrical Contractors' Association (South Africa)

(hereinafter referred to as the "employers" or the "employers' organisations"), of the one part, and the

South African Electrical Workers' Association

and the

Amalgamated Engineering Union

University of Pretoria
Together in Excellence

(hierna die "werknemers" of die "vakvereenigings" genoem), aan die ander kant,

wat die partye is by die Nywerheidsraad vir die Elektrotegniese Nywerheid (Natal),

om die Siektebystandsfondsooreenkoms, gepubliseer by Goewermentskennisgewing R. 203 van 11 Februarie 1977, soos gewysig en verleng by Goewermentskennisgewings R. 191 van 3 Februarie 1978, R. 327 van 23 Februarie 1979 en R. 479 van 16 Maart 1979, te wysig

1. KLOUSULE 1.—TOEPASSINGSBESTEK

(1) In subklousule (2), vervang die syfer "R1,05" deur die syfer "R1,35".

(2) In subklousule (3) (b)—

(a) vervang die syfer "R1,65" deur die syfer "R2,07";
(b) vervang die syfer "R74,25" deur die syfer "R93,15";
(c) vervang die syfer "R321,75" deur die syfer "R403,65".

2. KLOUSULE 7.—FINANSIËLE BEHEER

In subklousule (1), vervang die syfers "R6 000" en "R10 000" deur onderskeidelik die syfers "R30 000" en "R50 000".

3. KLOUSULE 15.—VOORBEHOUDSBEPALINGS

In subklousule (c)—

(1) vervang die syfer "R1,05" deur die syfer "R1,35";
(2) vervang die syfer "R47,25" deur die syfer "R60,75";
(3) vervang die syfer "R204,75" deur die syfer "R263,25".

4. KLOUSULE 16.—SIEKTEBYSTAND

(1) Vervang subklousule (1) (a) deur die volgende:

"(1) (a) Behoudens paragrawe (b) tot (k) van hierdie subklousule, is siektebystand soos volg aan werknemers betaalbaar:

Werklike loongroep per week	Siektebystand		
	1ste tot 4de week	5de tot 18de week	19de tot 30ste week
	Per week R	Per week R	Per week R
Oor R167	60	62	65
Oor R142 en tot R167	50	51	54
Oor R113 en tot R142	45	46	50
Oor R94 en tot R113	37	39	42
Oor R77 en tot R94	32	33	35
R77 en minder	26	28	30

Met dien verstande dat—

(i) indien 'n werknemer minstens 12 agtereenvolgende maande onmiddellik voordat hy van sy werk afwesig is weens ongeskiktheid of weens siekte in diens van dieselfde werkgewer en 'n lid van die Fonds was, hy geregtig is op aanvullende bystand van 50 persent van die siektebystand voorgeskryf vir die toepaslike loongroep vir afwesigheid van hoogstens twee weke in elke siklus van 12 agtereenvolgende maande diens;

(ii) indien 'n werknemer minder as 12 agtereenvolgende maande maar minstens ses agtereenvolgende maande onmiddellik voordat hy van sy werk afwesig is weens ongeskiktheid of weens siekte in diens van dieselfde werkgewer en 'n lid van die Fonds was, hy geregtig is op aanvullende bystand eweredig aan die persentasie voorgeskryf in (i) hierbo van die siektebystand voorgeskryf vir die toepaslike loongroep vir afwesigheid van hoogstens twee weke in die eerste 12 agtereenvolgende 12 maande diens, en die eweredige bystand moet gebaseer word op voltooide maande van sodanige diens.".

(2) Vervang paragraaf (b) van subklousule (1) deur die volgende:

"(b) Siektebystand word betaal ten opsigte van ongeskiktheid of afwesigheid van die werk weens siekte soos in paragraaf (c) bepaal. 'n Week bestaan uit vyf agtereenvolgende werkdae in die geval van werknemers wat vyf dae per week werk en ses agtereenvolgende werkdae in die geval van werknemers wat ses dae per week werk. Siektebystand vir dae afwesigheid weens siekte van minder as 'n volle week of weke word betaal op 'n grondslag eweredig aan die betrokke weeklikse bystand".

(hereinafter referred to as the "employees" or the "trade unions"), of the other part,

being parties to the Industrial Council for the Electrical Industry (Natal),

to amend the Sick Pay Fund Agreement, published under Government Notice R. 203 of 11 February 1977, as amended and extended by Government Notices R. 191 of 3 February 1978, R. 327 of 23 February 1979 and R. 479 of 16 March 1979.

1. CLAUSE 1.—SCOPE OF APPLICATION

(1) In subclause (2), for the figure "R1,05" substitute the figure "R1,35".

(2) In subclause (3) (b)—

(a) for the figure "R1,65" substitute the figure "R2,07";
(b) for the figure "R74,25" substitute the figure "R93,15";
(c) for the figure "R321,75" substitute the figure "R403,65".

2. CLAUSE 7.—FINANCIAL CONTROL

In subclause (1), for the figures "R6 000" and "R10 000" substitute the figures "R30 000" and "R50 000", respectively.

3. CLAUSE 15.—RESERVATIONS

In subclause (c)—

(1) for the figure "R1,05" substitute the figure "R1,35";
(2) for the figure "R47,25" substitute the figure "R60,75";
(3) for the figure "R204,75" substitute the figure "R263,25".

4. CLAUSE 16.—SICK PAY BENEFITS

(1) Substitute the following for subclause (1) (a):

"(1) (a) Subject to paragraphs (b) to (k) of this subclause, sick pay benefits shall be payable to employees as follows:

Actual wage group per week	Sick pay benefits		
	1st to 4th week	5th to 18th week	19th to 30th week
	Per week R	Per week R	Per week R
Over R167	60	62	65
Over R142 and up to R167	50	51	54
Over R113 and up to R142	45	46	50
Over R94 and up to R113	37	39	42
Over R77 and up to R94	32	33	35
R77 and under	26	28	30

Provided that—

(i) where an employee has been in the employe of the same employer and a member of the Fund for a period of not less than 12 consecutive months immediately prior to absence from work due to incapacity or on account of illness, he shall be entitled to receive a Supplementary benefit of 50 per cent of the specified sick pay benefit for the applicable wage group for absence of up to a maximum of two weeks in each cycle of 12 consecutive months of employment;

(ii) where an employee has been in the employ of the same employer and a member of the Fund for a period of less than 12 consecutive months but not less than six consecutive months immediately prior to absence from work due to incapacity or on account of illness, he shall be entitled to receive a Supplementary benefit pro rata to the percentage prescribed in (i) above of the specified sick pay benefit for the applicable wage group for absences up to a maximum of two weeks in the first 12 consecutive months of employment—the pro rata benefits to be based on completed months of such service.".

(2) Substitute the following for paragraph (b) of subclause (1):

"(b) Sick pay benefits shall be paid for incapacity or absences from work on account of illness as provided for in paragraph (c). A week shall constitute five consecutive working days for five-day working week employees and six consecutive working days for six-day working week employees Sick pay benefits for days of absence on account of sickness not constituting a completed week or weeks shall be paid pro rata to the relevant weekly benefit.".

University of Pretoria
Tuitheir in Excellence

(3) Vervang paragraaf (c) van subklousule (1) deur die volgende:

"(c) Siektebystand is betaalbaar vir aanhoudende afwesigheid van die werk as gevolg van ongeskiktheid of weens siekte soos hieronder bepaal:

(i) Afwesigheid van die werk vir twee werkdae of minder: Die Fonds betaal geen siektebystand nie;

(ii) afwesigheid van die werk vir drie werkdae: Siektebystand is op 'n pro rata-grondslag vir slegs die derde dag van afwesigheid betaalbaar;

(iii) afwesigheid van die werk vir vier werkdae: Siektebystand is op 'n pro rata-grondslag vir slegs die derde en vierde dae van afwesigheid betaalbaar;

(iv) afwesigheid van die werk vir vyf werkdae indien daar ses dae per week gewerk word: Siektebystand is op 'n pro rata-grondslag vir slegs die derde, vierde en vyfde dae van afwesigheid betaalbaar;

(v) afwesigheid van die werk vir een werkweek of langer: Siektebystand is, behoudens paragraaf (k), vir die volle tydperk van afwesigheid betaalbaar.".

5. KLOUSULE 17.—BYDRAES

In subklousule (1), vervang die bestaande tabel deur die volgende tabel:

"*Loongroep per week*	*Bedrag per week*
	c
Oor R167	30
Oor R142 en tot R167	26
Oor R113 en tot R142	24
Oor R94 en tot R113	22
Oor R77 en tot R94	19
R77 en minder	14.".

Namens die partye op hede die 1ste dag van April 1980 te Durban onderteken.

B. NICHOLSON, Voorsitter van die Raad.

P. DE BACKER, Ondervoorsitter van die Raad.

D. F. ANTHONY, Sekretaris van die Raad.

(3) Substitute the following for paragraph (c) of subclause (1):

"(c) Sick pay benefits shall be payable for continuous absence from work due to incapacity or on account of illness as hereinafter provided:

(i) Absence from work of two working days or less: No sick pay benefits shall be payable by the Fund;

(ii) absence from work of three working days: Sick pay benefits shall be payable pro rata for the third day of absence only;

(iii) absence from work of four working days: Sick pay benefits shall be payable pro rata for the third and fourth days of absence only;

(iv) absence from work of five working days where a six-day working week is worked: Sick pay benefits shall be payable pro rata for the third, fourth and fifth days of absence only;

(v) absence from work of one working week or more: A sick pay benefits shall be payble for the full period of absence, subject to the provisions of paragraph (k).".

5. CLAUSE 17.—CONTRIBUTIONS

In subclause (1), substitute the following table for the existing table—

"*Wage group per week*	*Amount per week*
	c
Over R167	30
Over R142 and up to R167	26
Over R113 and up to R142	24
Over R94 and up to R113	22
Over R77 and up to R94	19
R77 and under	14.".

Signed at Durban on behalf of the parties this 1st day of April 1980.

B. NICHOLSON, Chairman of the Council.

P. DE BACKER, Vice-Chairman of the Council.

D. F. ANTHONY, Secretary of the Council.

University of Fort Hare
Together in Excellence

No. R. 1821 29 Augustus 1980

WET OP NYWERHEIDSVERSOENING, 1956

KLERASIENYWERHEID, KAAP.—WYSIGING VAN HOOFOOREENKOMS

Ek, Stephanus Petrus Botha, Minister van Mannekragbenutting, verklaar hierby—

(a) kragtens artikel 48 (1) (a) van die Wet op Nywerheidsversoening, 1956, dat die bepalings van die Ooreenkoms (hierna die Wysigingsooreenkoms genoem) wat in die Bylae hiervan verskyn en op die Klerasienywerheid betrekking het, met ingang van 1 September 1980 en vir die tydperk wat op 12 Desember 1981 eindig, bindend is vir die werkgewersorganisasies en die vakvereniging wat die Wysigingsooreenkoms aangegaan het en vir die werkgewers en werknemers wat lede van genoemde organisasies of vereniging is;

(b) kragtens artikel 48 (1) (b) van genoemde Wet, dat die bepalings van die Wysigingsooreenkoms, uitgesonderd dié vervat in klousule 1 (1) (a), met ingang van 1 September 1980 en vir die tydperk wat op 12 Desember 1981 eindig, bindend is vir alle ander werkgewers en werknemers as dié genoem in paragraaf (a) van hierdie kennisgewing, wat betrokke is by of in diens is in genoemde Nywerheid in die gebiede gespesifiseer in klousule 1 (1) (b) van die Wysigingsooreenkoms; en

(c) kragtens artikel 48 (3) (a) van genoemde Wet, dat die bepalings van die Wysigingsooreenkoms, uitgesonderd dié vervat in klousule 1 (1) (a), met ingang van 1 September 1980 en vir die tydperk wat op 12 Desember 1981 eindig, in die gebiede

No. R. 1821 29 August 1980

INDUSTRIAL CONCILIATION ACT, 1956

CLOTHING INDUSTRY, CAPE.—AMENDMENT OF MAIN AGREEMENT

I, Stephanus Petrus Botha, Minister of Manpower Utilisation, hereby—

(a) in terms of section 48 (1) (a) of the Industrial Conciliation Act, 1956, declare that the provisions of the Agreement (hereinafter referred to as the Amending Agreement) which appears in the Schedule hereto and which relates to the Clothing Industry, shall be binding, with effect from 1 September 1980 and for the period ending 12 December 1981, upon the employers' organisations and the trade union which entered into the Amending Agreement and upon the employers and employees who are members of the said organisations or union;

(b) in terms of section 48 (1) (b) of the said Act, declare that the provisions of the Amending Agreement, excluding those contained in clause 1 (1) (a), shall be binding, with effect from 1 September 1980 and for the period ending 12 December 1981, upon all employers and employees other than those referred to in paragraph (a) of this notice, who are engaged or employed in the said Industry in the areas specified in clause 1 (1) (b) of the Amending Agreement; and

(c) in terms of section 48 (3) (a) of the said Act, declare that in the areas specified in clause 1 (1) (b) of the Amending Agreement and with effect from 1 September 1980 and for the period ending 12 December 1981, the provisions of the Amending

gespesifiseer in klousule 1 (1) (b) van die Wysigingsooreenkoms *mutatis mutandis* bindend is vir alle persone wat nie werknemers is nie en wat in diens is in genoemde Nywerheid by dié werkgewers vir wie enigeen van genoemde bepalings ten opsigte van werknemers bindend is en vir daardie werkgewers ten opsigte van sodanige persone in hul diens.

S. P. BOTHA, Minister van Mannekragbenutting.

BYLAE

NYWERHEIDSRAAD VIR DIE KLERASIENYWERHEID (KAAP)

OOREENKOMS

ingevolge die Wet op Nywerheidsversoening, 1956, gesluit deur en aangegaan tussen die

Cape Clothing Manufacturers' Association

en die

Cape Knitting Industry Association

(hierna die "werkgewers" of die "werkgewersorganisasies" genoem), aan die een kant, en die

Garment Workers' Union of the Western Province

(hierna die "werknemers" of die "vakvereniging" genoem), aan die ander kant,

wat die partye is by die Nywerheidsraad vir die Klerasienywerheid (Kaap),

om die Ooreenkoms van die Raad, gepubliseer by Goewermentskennisgewing R. 540 van 23 Maart 1979, soos gewysig by Goewermentskennisgewings R. 2237 van 5 Oktober 1979, R. 2632 van 23 November 1979, R. 701 van 3 April 1980 en R. 1283 van 20 Junie 1980, te wysig.

1. TOEPASSINGSBESTEK VAN OOREENKOMS

(1) Hierdie Ooreenkoms moet in die Klerasienywerheid nagekom word—

(a) deur die werkgewers en werknemers wat onderskeidelik lede van die werkgewersorganisasies en die vakvereniging is;

(b) in die landdroesdistrikte—

(i) Die Kaap, Simonstad, Goodwood, Bellville, Somerset-Wes, Strand en Worcester deur werkgewers en werknemers wat onderskeidelik betrokke is by of deelneem aan die werksaamhede vermeld in paragrawe (a) en/of (b) van die omskrywing van "Klerasienywerheid" in klousule 3 van die Ooreenkoms gepubliseer by Goewermentskennisgewing R. 540 van 23 Maart 1979; en

(ii) Wynberg deur werkgewers en werknemers wat onderskeidelik betrokke is by of deelneem aan die werksaamhede vermeld in paragrawe (a) en/of (b) en/of (c) van die omskrywing van "Klerasienywerheid" in klousule 3 van die Ooreenkoms gepubliseer by Goewermentskennisgewing R. 540 van 23 Maart 1979.

(2) Ondanks subklousule (1), is hierdie Ooreenkoms—

(a) slegs van toepassing op werknemers vir wie lone in hierdie Ooreenkoms voorgeskryf word;

(b) nie van toepassing op werknemers en werkende direkteure wie se lone minstens R4 800 per jaar bedra nie;

(c) nie van toepassing op werkgewers en werknemers wat betrokke is by of in diens is in die Brei-afdeling nie.

2. KLOUSULE 22.—UITGAWES VAN DIE RAAD

In subklousule (1), vervang die uitdrukking "drie sent" deur die uitdrukking "vier sent".

Namens die partye op hede die 31ste dag van Julie 1980 te Soutrivier onderteken.

A. M. ROSENBERG, Voorsitter van die Raad.

L. A. PETERSEN, Ondervoorsitter van die Raad.

G. J. NEL, Sekretaris van die Raad.

Agreement, excluding those contained in clause 1 (1) (a), shall *mutatis mutandis* be binding upon all persons who are not employees and who are employed in the said Industry by the employers upon whom any of the said provisions are binding in respect of employees and upon those employers in respect of such persons in their employ.

S. P. BOTHA, Minister of Manpower Utilisation.

SCHEDULE

INDUSTRIAL COUNCIL FOR THE CLOTHING INDUSTRY (CAPE)

AGREEMENT

in accordance with the provisions of the Industrial Conciliation Act, 1956, made and entered into by and between the

Cape Clothing Manufacturers' Association

and the

Cape Knitting Industry Association

(hereinafter referred to as the "employers" or the "employers' organisations"), of the one part, and the

Garment Workers' Union of the Western Province

(hereinafter referred to as the "employees" or the "trade union"), of the other part,

being parties to the Industrial Council for the Clothing Industry (Cape),

to amend the Agreement of the Council, published under Government Notice R. 540 of 23 March 1979, as amended by Government Notices R. 2237 of 5 October 1979, R. 2632 of 23 November 1979, R. 701 of 3 April 1980 and R. 1283 of 20 June 1980.

1. SCOPE OF APPLICATION OF AGREEMENT

(1) The terms of this Agreement shall be observed in the Clothing Industry—

(a) by the employers and the employees who are members of the employers' organisations and trade union respectively;

(b) in the Magisterial Districts of—

(i) The Cape, Simonstown, Goodwood, Bellville, Somerset West, Strand and Worcester by employers and employees who are engaged or employed on the operations referred to in paragraphs (a) and/or (b) of the definition of "Clothing Industry" in clause 3 of the Agreement published under Government Notice R. 540 of 23 March 1979; and

(ii) Wynberg by employers and employees who are engaged or employed on the operations referred to in paragraphs (a) and/or (b) and/or (c) of the definition of "Clothing Industry" in clause 3 of the Agreement published under Government Notice R. 540 of 23 March 1979.

(2) Notwithstanding the provisions of subclause (1), the terms of this Agreement shall—

(a) only apply in respect of employees for whom wages are prescribed in this Agreement;

(b) not apply to employees and working directors whose wages are not less than R4 800 per annum;

(c) not apply to employers and employees engaged or employed in the Knitting Division.

2. CLAUSE 22.—EXPENSES OF THE COUNCIL

In subclause (1), substitute the expression "four cents" for the expression "three cents".

Signed at Salt River on behalf of the parties this 31st day of July 1980.

A. M. ROSENBERG, Chairman of the Council.

L. A. PETERSEN, Vice-Chairman of the Council.

G. J. NEL, Secretary of the Council.

University of Fort Hare
Together in Excellence

No. R. 1822 29 Augustus 1980

WET OP NYWERHEIDSVERSOENING, 1956

KLERASIENYWERHEID, KAAP. — WYSIGING VAN OOREENKOMS VIR DIE BREI-AFDELING

Ek, Stephanus Petrus Botha, Minister van Mannekragbenutting, verklaar hierby—

(a) kragtens artikel 48 (1) (a) van die Wet op Nywerheidsversoening, 1956, dat die bepalings van die Ooreenkoms (hierna die Wysigingsooreenkoms genoem) wat in die Bylae hiervan verskyn en op die Klerasienywerheid betrekking het, met ingang van 1 September 1980 en vir die tydperk wat op 12 Desember 1981 eindig, bindend is vir die werkgewersorganisasies en die vakvereniging wat die Wysigingsooreenkoms aangegaan het en vir die werkgewers en werknemers wat lede van genoemde organisasies of vereniging is;

(b) kragtens artikel 48 (1) (b) van genoemde Wet, dat die bepalings van die Wysigingsooreenkoms, uitgesonderd dié vervat in klousule 1 (1) (a), met ingang van 1 September 1980 en vir die tydperk wat op 12 Desember 1981 eindig, bindend is vir alle ander werkgewers en werknemers as dié genoem in paragraaf (a) van hierdie kennisgewing, wat betrokke is by of in diens is in genoemde Nywerheid in die gebiede gespesifiseer in klousule 1 (1) (b) van die Wysigingsooreenkoms; en

(c) kragtens artikel 48 (3) (a) van genoemde Wet, dat die bepalings van die Wysigingsooreenkoms, uitgesonderd dié vervat in klousule 1 (1) (a), met ingang van 1 September 1980 en vir die tydperk wat op 12 Desember 1981 eindig, in die gebiede gespesifiseer in klousule 1 (1) (b) van die Wysigingsooreenkoms *mutatis mutandis* bindend is vir alle persone wat nie werknemers is nie en wat in diens is in genoemde Nywerheid by dié werkgewers vir wie enigeen van genoemde bepalings ten opsigte van werknemers bindend is en vir daardie werkgewers ten opsigte van sodanige persone in hul diens.

S. P. BOTHA, Minister van Mannekragbenutting.

BYLAE

NYWERHEIDSRAAD VIR DIE KLERASIENYWERHEID (KAAP)

OOREENKOMS

ingevolge die bepalings van die Wet op Nywerheidsversoening, 1956, gesluit deur en aangegaan tussen die

Cape Knitting Industry Association

en die

Cape Clothing Manufacturers' Association

(hierna die "werkgewers" of die "werkgewersorganisasies" genoem), aan die een kant, en die

Garment Workers' Union of the Western Province

(hierna die "werknemers" of die "vakvereniging" genoem), aan die ander kant,

wat die partye is by die Nywerheidsraad vir die Klerasienywerheid (Kaap),

om die Ooreenkoms van die Raad, gepubliseer by Goewermentskennisgewing R. 542 van 23 Maart 1979, soos gewysig by Goewermentskennisgewings R. 2238 van 5 Oktober 1979 en R. 1285 van 20 Junie 1980, te wysig.

1. TOEPASSINGSBESTEK VAN OOREENKOMS

(1) Hierdie Ooreenkoms moet in die Brei-afdeling van die Klerasienywerheid nagekom word—

(a) deur die werkgewers en werknemers wat onderskeidelik lede van die werkgewersorganisasies en die vakvereniging is;

No. R. 1822 29 August 1980

INDUSTRIAL CONCILIATION ACT, 1956

CLOTHING INDUSTRY, CAPE.—AMENDMENT OF AGREEMENT FOR THE KNITTING DIVISION

I, Stephanus Petrus Botha, Minister of Manpower Utilisation, hereby—

(a) in terms of section 48 (1) (a) of the Industrial Conciliation Act, 1956, declare that the provisions of the Agreement (hereinafter referred to as the Amending Agreement) which appears in the Schedule hereto and which relates to the Clothing Industry, shall be binding, with effect from 1 September 1980 and for the period ending 12 December 1981, upon the employers' organisations and the trade union which entered into the Amending Agreement and upon the employers and employees who are members of the said organisations or union;

(b) in terms of section 48 (1) (b) of the said Act, declare that the provisions of the Amending Agreement, excluding those contained in clause 1 (1) (a), shall be binding, with effect from 1 September 1980 and for the period ending 12 December 1981, upon all employers and employees other than those referred to in paragraph (a) of this notice, who are engaged or employed in the said Industry in the areas specified in clause 1 (1) (b) of the Amending Agreement; and

(c) in terms of section 48 (3) (a) of the said Act, declare that in the areas specified in clause 1 (1) (b) of the Amending Agreement and with effect from 1 September 1980 and for the period ending 12 December 1981, the provisions of the Amending Agreement, excluding those contained in clause 1 (1) (a), shall *mutatis mutandis* be binding upon all persons who are not employees and who are employed in the said Industry by the employers upon whom any of the said provisions are binding in respect of employees and upon those employers in respect of such persons in their employ.

S. P. BOTHA, Minister of Manpower Utilisation.

SCHEDULE

INDUSTRIAL COUNCIL FOR THE CLOTHING INDUSTRY (CAPE)

AGREEMENT

in accordance with the provisions of the Industrial Conciliation Act, 1956, made and entered into by and between the

Cape Knitting Industry Association

and the

Cape Clothing Manufacturers' Association

(hereinafter referred to as the "employers" or the "employers' organisations"), of the one part, and the

Garment Workers' Union of the Western Province

(hereinafter referred to as the "employees" or the "trade union"), of the other part,

being the parties to the Industrial Council for the Clothing Industry (Cape),

to amend the Agreement of the Council published under Government Notice R. 542 of 23 March 1979, as amended by Government Notices R. 2238 of 5 October 1979 and R. 1285 of 20 June 1980.

1. SCOPE OF APPLICATION OF AGREEMENT

(1) The terms of this Agreement shall be observed in the Knitting Division of the Clothing Industry—

(a) by the employers and the employees who are members of the employers' organisations and trade union, respectively;

(b) in die landdrosdistrikte Die Kaap, Wynberg, Simonstad, Goodwood, Bellville, Somerset-Wes, Strand, Worcester en George.

(2) Ondanks subklousule (1), is hierdie Ooreenkoms—

(a) slegs van toepassing ten opsigte van werknemers vir wie lone in hierdie Ooreenkoms voorgeskryf word;

(b) nie van toepassing op werknemers en werkende direkteure wat lone van minstens R4 800 per jaar ontvang nie.

2. KLOUSULE 22.—UITGAWES VAN DIE RAAD

In subklousule (1), vervang die uitdrukking "drie sent" deur die uitdrukking "vier sent".

Namens die partye op hede die 31ste dag van Julie 1980 te Soutrivier onderteken.

A. M. ROSENBERG, Voorsitter van die Raad.

L. A. PETERSEN, Ondervoorsitter van die Raad.

G. J. NEL, Sekretaris van die Raad.

No. R. 1823 29 Augustus 1980

WET OP NYWERHEIDSVERSOENING, 1956

KLERASIENYWERHEID, KAAP. — WYSIGING VAN OOREENKOMS VIR DIE PLATTELANDSE GEBIEDE

Ek, Stephanus Petrus Botha, Minister van Mannekragbenutting, verklaar hierby—

(a) kragtens artikel 48 (1) (a) van die Wet op Nywerheidsversoening, 1956, dat die bepalings van die Ooreenkoms (hierna die Wysigingsooreenkoms) genoem) wat in die Bylae hiervan verskyn en op die Klerasienywerheid betrekking het, met ingang van 1 September 1980 en vir die tydperk wat op 31 Desember 1981 eindig, bindend is vir die werkgewersorganisasies en die vakverenigings wat die Wysigingsooreenkoms aangegaan het en vir die werkgewers en werknemers wat lede van genoemde organisasies of vereniging is;

(b) kragtens artikel 48 (1) (b) van genoemde Wet, dat die bepalings van die Wysigingsooreenkoms met ingang van 1 September 1980 vir die tydperk wat op 31 Desember 1981 eindig, bindend is vir alle ander werkgewers en werknemers as dié genoem in paragraaf (a) van hierdie kennisgewing, wat betrokke is by of in diens is in genoemde Nywerheid in die landdrosdistrik George; en

(c) kragtens artikel 48 (3) (a) van genoemde Wet, dat die bepalings van die Wysigingsooreenkoms met ingang van 1 September 1980 en vir die tydperk wat op 31 Desember 1981 eindig, in die gebied gespesifiseer in paragraaf (b) van hierdie kennisgewing *mutatis mutandis* bindend is vir alle persone wat nie werknemers is nie en wat in diens is in genoemde Nywerheid by dié werkgewers vir wie enigeen van genoemde bepalings ten opsigte van werknemers bindend is en vir daardie werkgewers ten opsigte van sodanige persone in hul diens.

S. P. BOTHA, Minister van Mannekragbenutting.

BYLAE

NYWERHEIDSRAAD VIR DIE KLERASIENYWERHEID (KAAP)

OOREENKOMS

ingevolge die Wet op Nywerheidsversoening, 1956, geskuit deur en aangegaan tussen die

Cape Clothing Manufacturers' Association

en die

Cape Knitting Industry Association

(b) in the Magisterial Districts of The Cape, Wynberg, Simonstown, Goodwood, Bellville, Somerset West, Strand, Worcester and George.

(2) Notwithstanding the provisions of subclause (1), the terms of this Agreement shall—

(a) only apply in respect of employees for whom wages are prescribed in this Agreement;

(b) not apply to employees and working directors whose wages are not less than R4 800 per annum.

2. CLAUSE 22.—EXPENSES OF THE COUNCIL

In subclause (1), substitute the expression "four cents" for the expression "three cents".

Signed at Salt River on behalf of the parties this 31st day of July 1980.

A. M. ROSENBERG, Chairman of the Council.

L. A. PETERSEN, Vice-Chairman of the Council.

G. J. NEL, Secretary of the Council.

No. R. 1823 29 August 1980

INDUSTRIAL CONCILIATION ACT, 1956

CLOTHING INDUSTRY, CAPE.—AMENDMENT OF AGREEMENT FOR THE COUNTRY AREAS

I, Stephanus Petrus Botha, Minister of Manpower Utilisation, hereby—

(a) in terms of section 48 (1) (a) of the Industrial Conciliation Act, 1956, declare that the provisions of the Agreement (hereinafter referred to as the Amending Agreement) which appears in the Schedule hereto and which relates to the Clothing Industry, shall be binding, with effect from 1 September 1980 and for the period ending 31 December 1981, upon the employer's organisations and the trade union which entered into the Amending Agreement and upon the employers and employees who are members of the said organisations or union;

(b) in terms of section 48 (1) (b) of the said Act, declare that the provisions of the Amending Agreement shall be binding, with effect from 1 September 1980 and for the period ending 31 December 1981, upon all employers and employees other than those referred to in paragraph (a) of this notice, who are engaged or employed in the said Industry in the Magisterial District of George; and

(c) in terms of section 48 (3) (a) of the said Act, declare that in the area specified in paragraph (b) of this notice and with effect from 1 September 1980 and for the period ending 31 December 1981, the provisions of the Amending Agreement shall *mutatis mutandis* be binding upon all persons who are not employees and who are employed in the said Industry by the employers upon whom any of the said provisions are binding in respect of employees and upon those employers in respect of such persons in their employ.

S. P. BOTHA, Minister of Manpower Utilisation.

SCHEDULE

INDUSTRIAL COUNCIL FOR THE CLOTHING INDUSTRY (CAPE)

AGREEMENT

in accordance with the provisions of the Industrial Conciliation Act, 1956, made and entered into by and between the

Cape Clothing Manufacturers' Association

and the

Cape Knitting Industry Association

(hierna die "werkgewers" of die "werkgewersorganisasies" genoem), aan die een kant, en die

Garment Workers' Union of the Western Province

(hierna die "werknemers" of die "vakvereniging" genoem), aan die ander kant,

wat die partye is by die Nywerheidsraad vir die Klerasienywerheid (Kaap),

om die Ooreenkoms van die Raad, gepubliseer by Goewermentskennisgewing R. 543 van 23 Maart 1979, soos gewysig by Goewermentskennisgewings R. 2633 van 23 November 1979 R. 700 van 3 April 1980 en R. 1284 van 20 Junie 1980, te wysig.

1. TOEPASSINGBESTEK VAN OOREENKOMS

(1) Hierdie Ooreenkoms moet in die landdrosdistrik George nagekom word deur die werkgewers en werknemers in die Klerasienywerheid: Met dien verstande dat vir die toepassing van hierdie klousule die uitdrukking "Klerasienywerheid" nie ook die "Brei-afdeling" soos omskryf, omvat nie.

(2) Ondanks subklousule (1), is hierdie Ooreenkoms—

(a) slegs van toepassing op werknemers vir wie lone in hierdie Ooreenkoms voorgeskryf word;

(b) nie van toepassing nie op werknemers en werkende direkteure wie se lone minstens R4 800 per jaar bedra.

2. KLOUSULE 22.—UITGAWES VAN DIE RAAD

In subklousule (1), vervang die uitdrukking "3c" deur die uitdrukking "vier sent".

Namens die partye op hede die 31ste dag van Julie 1980 te Soutrivier onderteken.

A. M. ROSENBERG, Voorsitter van die Raad.

L. A. PETERSEN, Ondervoorsitter van die Raad.

G. J. NEL, Sekretaris van die Raad.

(hereinafter referred to as the "employers" or the "employers' organisations"), of the one part, and the

Garment Workers' Union of the Western Province

(hereinafter referred to as the "employees" or the "trade union"), of the other part,

being parties to the Industrial Council for the Clothing Industry (Cape),

to amend the Agreement of the Council, published under Government Notice R. 543 of 23 March 1979, as amended by Government Notices R. 2633 of 23 November 1979, R. 700 of 3 April 1980 and R. 1284 of 20 June 1980.

1. SCOPE OF APPLICATION OF AGREEMENT

(1) The terms of this Agreement shall be observed in the Magisterial District of George by the employers and employees in the Clothing Industry: Provided that for the purposes of this clause the expression "Clothing Industry" shall not include the "Knitting Division" as defined.

(2) Notwithstanding the provisions of subclause (1), the terms of this Agreement shall—

(a) only apply in respect of employees for whom wages are prescribed in this Agreement;

(b) not apply to employees and working directors whose wages are not less than R4 800 per annum.

2. CLAUSE 22.—EXPENSES OF THE COUNCIL

In subclause (1), substitute the expression "four cents" for the expression "3c".

Signed at Salt River on behalf of the parties this 31st day of July 1980.

A. M. ROSENBERG, Chairman of the Council.

L. A. PETERSEN, Vice-Chairman of the Council.

G. J. NEL, Secretary of the Council.

University of Fort Hare
Together in Excellence

No. R. 1824 29 Augustus 1980

WET OP NYWERHEIDSVERSOENING, 1956

DIAMANTSLYPNYWERHEID VAN SUID-AFRIKA.—HERNUWING VAN AFBAKENINGS-OOREENKOMS

Ek, Stephanus Petrus Botha, Minister van Mannekragbenutting, verklaar hierby, kragtens artikel 48 (a) (ii) van die Wet op Nywerheidsversoening, 1956, dat die bepalings van Goewermentskennisgewings R. 1514 van 5 Augustus 1977 en R. 822 van 20 April 1979, van krag is vanaf 1 September 1980 en vir die tydperk wat op 31 Oktober 1980 eindig.

S. P. BOTHA, Minister van Mannekragbenutting.

No. R. 1824 29 August 1980

INDUSTRIAL CONCILIATION ACT, 1956

DIAMOND CUTTING INDUSTRY OF SOUTH AFRICA.—RENEWAL OF DEMARCATION AGREEMENT

I, Stephanus Petrus Botha, Minister of Manpower Utilisation, hereby, in terms of section 48 (a) (ii) of the Industrial Conciliation Act, 1956, declare the provisions of Government Notices R. 1514 of 5 August 1977 and R. 822 of 20 April 1979, to be effective from 1 September 1980 and for the period ending 31 October 1980.

S. P. BOTHA, Minister of Manpower Utilisation.

No. R. 1825 29 Augustus 1980

WET OP NYWERHEIDSVERSOENING, 1956

LEKKERGOEDNYWERHEID (KAAP).—WYSIGING VAN HOOFOOREENKOMS

Ek, Stephanus Petrus Botha, Minister van Mannekragbenutting, verklaar hierby—

(a) kragtens artikel 48 (1) (a) van die Wet op Nywerheidsversoening, 1956, dat die bepalings van die Ooreenkoms (hierna die Wysigingsooreenkoms genoem) wat in die Bylae hiervan verskyn en op die Lekkergoednywerheid betrekking het, met ingang van die eerste Maandag na die datum van publikasie van hierdie kennisgewing en vir die tydperk wat op 28 Februarie 1982 eindig, bindend is vir die werkgewersorganisasie en die vakvereniging wat die Wysigingsooreenkoms aangegaan het vir die werkgewers en werknemers wat lede van genoemde organisasie of vereniging is;

No. R. 1825 29 August 1980

INDUSTRIAL CONCILIATION ACT, 1956

SWEETMAKING INDUSTRY (CAPE).—AMENDMENT OF MAIN AGREEMENT

I, Stephanus Petrus Botha, Minister of Manpower Utilisation, hereby—

(a) in terms of section 48 (1) (a) of the Industrial Conciliation Act, 1956, declare that the provisions of the Agreement (hereinafter referred to as the Amending Agreement) which appears in the Schedule hereto and which relates to the Sweetmaking Industry, shall be binding, with effect from the first Monday after the date of publication of this notice and for the period ending 28 February 1982, upon the employers' organisation and the trade union which entered into the Amending Agreement upon the employers and employees who are members of the said organisation or union;

(b) kragtens artikel 48 (1) (b) van genoemde Wet, dat die bepalings van die Wysigingsooreenkoms, uitgesonderd dié vervat in klousule 1 (1), met ingang van die eerste Maandag na die datum van publikasie van hierdie kennisgewing en vir die tydperk wat op 28 Februarie 1982 eindig, bindend is vir alle werkgewers en werknemers as dié genoem in paragraaf (a) van hierdie kennisgewing, wat betrokke is by of in diens is in genoemde Nywerheid in die gebiede gespesifiseer in klousule 1 (2) van die Wysigingsooreenkoms; en

(c) kragtens artikel 48 (3) (a) van genoemde Wet, dat die bepalings van die Wysigingsooreenkoms, uitgesonderd dié vervat in klousule 1 (1), met ingang van die eerste Maandag na die datum van publikasie van hierdie kennisgewing en vir die tydperk wat op 28 Februarie 1982 eindig, in die gebiede gespesifiseer in klousule 1 (2) van die Wysigingsooreenkoms *mutatis mutandis* bindend is vir alle persone wat nie werknemers is nie en wat in diens is in genoemde Nywerheid vir dié werkgewers vir wie enigeen van genoemde bepalings ten opsigte van werknemers bindend is en vir daardie werkgewers ten opsigte van sodanige persone in hul diens.

S. P. BOTHA, Minister van Mannekragbenutting.

BYLAE

NYWERHEIDSRAAD VIR DIE LEKKERGOED-NYWERHEID (KAAP)

OOREENKOMS

ingevolge die Wet op Nywerheidsversoening, 1956, gesluit deur en aangegaan tussen die

Western Cape Sweet Manufacturers' Association

(hierna die "werkgewers" of die "werkgewersorganisasie" genoem), aan die een kant, en die

Western Province Sweet Workers' Union

(hierna die "werknemers" of die "vakvereniging" genoem) aan die ander kant,

wat die partye is by die Nywerheidsraad vir die Lekkergoednywerheid (Kaap),

om die Hoofooreenkoms van die Raad, gepubliseer by Goewermentskennisgewing R. 1538 van 30 Augustus 1974, soos verleng en gewysig by Goewermentskennisgewings R. 2235 van 21 November 1975, R. 2380 van 19 Desember 1975, R. 2388 van 1 Desember 1978, R. 2560 en R. 2561 van 22 Desember 1978, te wysig.

1. GEBIED EN TOEPASSINGSBESTEK VAN OOREENKOMS

Hierdie Ooreenkoms moet in die Produksieseksie van die Lekkergoednywerheid nagekom word—

(1) deur alle werkgewers wat lede van die werkgewersorganisasie is en deur alle werknemers wat lede van die vakvereniging is;

(2) in die landdrosdistrikte Die Kaap, Wynberg, Goodwood en Bellville, in daardie gedeelte van die landdrosdistrik Stellenbosch wat voor die publikasie van Goewermentskennisgewing 283 van 2 Maart 1962, binne die landdrosdistrik Bellville geval het, in daardie gedeelte van die landdrosdistrik Kuilsrivier wat voor die publikasie van Goewermentskennisgewing 661 van 19 April 1974, binne die landdrosdistrik Stellenbosch maar voor 2 Maart 1962, binne die landdrosdistrik Bellville geval het, en in daardie gedeelte van die landdrosdistrik Somerset-Wes wat voor 9 Maart 1973 (Goewermentskennisgewing 173 van 9 Februarie 1973) binne die landdrosdistrik Wynberg geval het.

(b) in terms of section 48 (1) (b) of the said Act, declare that the provisions of the Amending Agreement, excluding those contained in clause 1 (1), shall be binding, with effect from the first Monday after the date of publication of this notice and for the period ending 28 February 1982, upon all employers and employees other than those referred to in paragraph (a) of this notice, who are engaged or employed in the said Industry in the areas specified in clause 1 (2) of the Amending Agreement; and

(c) in terms of section 48 (3) (a) of the said Act, declare that in the areas specified in clause 1 (2) of the Amending Agreement and with effect from the first Monday after the date of publication of this notice and for the period ending 28 February 1982, the provisions of the Amending Agreement, excluding those contained in clause 1 (1), shall *mutatis mutandis* be binding upon all persons who are not employees and who are employed in the said Industry by the employers upon whom any of the said provisions are binding in respect of employees and upon those employers in respect of such persons in their employ.

S. P. BOTHA, Minister of Manpower Utilisation.

SCHEDULE

INDUSTRIAL COUNCIL FOR THE SWEETMAKING INDUSTRY (CAPE)

AGREEMENT

in accordance with the provisions of the Industrial Conciliation Act, 1956, made and entered into by and between the

Western Cape Sweet Manufacturers' Association

(hereinafter referred to as the "employers" or the "employers' organisation"), of the one part, and the

Western Province Sweet Workers' Union

(hereinafter referred to as the "employees" or the "trade union"), of the other part,

being parties to the Industrial Council for the Sweetmaking Industry (Cape),

to amend the Main Agreement of the Council, published under Government Notice R. 1538 of 30 August 1974, as extended and amended by Government Notices R. 2235 of 21 November 1975, R. 2380 of 19 December 1975, R. 2388 of 1 December 1978, R. 2560 and R. 2561 of 22 Decemb 1978.

1. AREA AND SCOPE OF APPLICATION OF AGREEMENT

The terms of this Agreement shall be observed in the Production Section of the Sweetmaking Industry—

(1) by all employers who are members of the employers' organisation and all employees who are members of the trade union;

(2) in the Magisterial Districts of The Cape, Wynberg, Goodwood and Bellville, in that portion of the Magisterial District of Stellenbosch which, prior to the publication of Government Notice 283 of 2 March 1962, fell within the Magisterial District of Bellville, in that portion of the Magisterial District of Kuils River which, prior to the publication of Government Notice 661 of 19 April 1974, fell within the Magisterial District of Stellenbosch but which, prior to 2 March 1962, fell within the Magisterial District of Bellville, and in that portion of the Magisterial District of Somerset West which, prior to 9 March 1973 (Government Notice 173 of 9 February 1973), fell within the Magisterial District of Wynberg.

University of Fort Hare
Together in Excellence

2. KLOUSULE 4.—BESOLDIGING

Vervang subklousule (1) (a) deur die volgende:

"(a) Werknemers uitgesonderd los werknemers:

	Loon per week R
Ambagsman	69,00
Assistent-versendingsklerk	33,50
Assistent-voorman	63,00
Assistent-pakhuisman	33,50
Kleedkameropsigter	31,50
Versendingsklerk	54,00
Fabrieksklerk	32,50
Voorman	73,00
Werknemer, Graad I, gekwalifiseerd	33,00
Werknemer Graad I, ongekwalifiseerd—	
gedurende eerste drie maande ondervinding	31,50
gedurende tweede drie maande ondervinding	32,00
gedurende derde drie maande ondervinding	32,50
Werknemer, Graad II, gekwalifiseerd	32,50
Werknemer, Graad II, ongekwalifiseerd—	
gedurende eerste drie maande ondervinding	31,00
gedurende tweede drie maande ondervinding	31,50
gedurende derde drie maande ondervinding	32,00
Groepleier	34,00
Algemene werker	32,25
Werknemer Graad III	31,50
Instandhouer	35,00
Pakhuisman	54,00
Lekkergoedmaker, gekwalifiseerd	69,50
Lekkergoedmaker, ongekwalifiseerd—	
gedurende eerste ses maande ondervinding	31,50
gedurende tweede ses maande ondervinding	34,75
gedurende derde ses maande ondervinding	38,00
gedurende vierde ses maande ondervinding	41,25
gedurende vyfde ses maande ondervinding	45,20
gedurende sesde ses maande ondervinding	49,25
gedurende sewende ses maande ondervinding	53,30
gedurende agtste ses maande ondervinding	57,35
gedurende negende ses maande ondervinding	61,40
gedurende tiende ses maande ondervinding	65,45
Drywer van 'n motorvoertuig waarvan die onbelaste massa, tesame met die onbelaste massa van enige sleepwa of sleepwaens wat deur sodanige voertuig getrek word—	
(i) hoogstens 2 721,6 kg is	33,50
(ii) meer as 2 721,6 kg is	39,00
Ketelbediener	32,50
Wag	33,50.".

Namens die partye op hede die 25ste dag van Julie 1980 te Kaapstad onderteken.

I. BLUMBERG, Voorsitter.

J. HEEGER, Ondervoorsitter.

J. D. F. COLINESE, Sekretaris.

2. CLAUSE 4.—REMUNERATION

Substitute the following for subclause (1) (a):

"(a) Employees other than casual employees:

	Wage per week R
Artisan	69,00
Assistant despatch clerk	33,50
Assistant foreman	63,00
Assistant storeman	33,50
Cloakroom attendant	31,50
Despatch clerk	54,00
Factory clerk	32,50
Foreman	73,00
Grade I employee qualified	33,00
Grade I employee, unqualified—	
during first three months' experience	31,50
during second three months' experience	32,00
during third three months' experience	32,50
Grade II employee, qualified	32,50
Grade II employee, unqualified—	
during first three months' experience	31,00
during second three months' experience	31,50
during third three months' experience	32,00
Group leader	34,00
General worker	32,25
Grade III employee	31,50
Maintenance man	35,00
Storeman	54,00
Sweetmaker, qualified	69,50
Sweetmaker, unqualified—	
during first six months' experience	31,50
during second six months' experience	34,75
during third six months' experience	38,00
during fourth six months' experience	41,25
during fifth six months' experience	45,20
during sixth six months' experience	49,25
during seventh six months' experience	53,30
during eighth six months' experience	57,35
during ninth six months' experience	61,40
during tenth six months' experience	65,45
Driver of motor vehicle, the unladen mass of which, together with the unladen mass of any trailer or trailers drawn by such vehicle—	
(i) does not exceed 2 721, 6 kg	33,50
(ii) exceeds 2 721,6 kg	39,00
Boiler attendant	32,50
Watchman	33,50.".

Signed at Cape Town this 25th day of July 1980.

I. BLUMBERG, Chairman.

J. HEEGER, Vice Chairman.

J. D. F. COLINESE, Secretary.

DEPARTEMENT VAN POS- EN TELEKOMMUNIKASIEWESE

No. R. 1817 29 Augustus 1980

DIE SUID-AFRIKAANSE UITSAAIKORPORASIE.—WYSIGING VAN REGULASIES

Kragtens artikel 23 van die Uitsaaiwet, 1976 (Wet 73 van 1976), het die Suid-Afrikaanse Uitsaaikorporasie, met die goedkeuring van die Minister van Pos- en Telekommunikasiewese, die regulasies in die Bylae uitgevaardig.

BYLAE

1. In hierdie Bylae, tensy uit die samehang anders blyk, beteken die uitdrukking "die regulasies" die regulasies afgekondig by Goewermentskennisgewing R. 1763 van 1 Oktober 1976, soos gewysig by Goewermentskennisgewings R. 1224 van 8 Julie 1977, R. 2453 van 2 Desember 1977 en R. 2121 van 27 Oktober 1978.

DEPARTMENT OF POSTS AND TELECOMMUNICATIONS

No. R. 1817 29 August 1980

THE SOUTH AFRICAN BROADCASTING CORPORATION.—AMENDMENT OF REGULATIONS

With the approval of the Minister of Posts and Telecommunications, the regulations contained in the Schedule were made by the South African Broadcasting Corporation under section 23 of the Broadcasting Act, 1976 (Act 73 of 1976)

SCHEDULE

1. In this Schedule, unless inconsistent with the context, the expression "the regulations" shall mean the regulations promulgated by Government Notice R. 1763 of 1 October 1976, as amended by Government Notices R. 1224 of 8 July 1977, R. 2453 of 2 December 1977 and R. 2121 of 27 October 1978.

2. Regulasie 1 van die regulasies word hierby gewysig deur die omskrywing van "FM-gebied" in subregulasie (1) deur die volgende omskrywing te vervang:

" 'FM-gebied' die hele Republiek, met uitsondering van die landdrosdistrikte Calitzdorp, Fraserburg, Gordonia (maar nie die munisipale gebiede van Upington, Keimoes en Kakamas nie), Kenhardt (maar nie die munisipale gebiede van Kenhardt en Pofadder nie), Steytlerville, Sutherland, Uniondale en Willowmore;".

3. Paragraaf 3 van die Bylae tot die regulasies word hierby gewysig deur die bewoording van subparagraaf (a) in kolom 1 deur die volgende bewoording te vervang:

" 'n Ontvanger van 'n ouderdomspensioen, oudstryderspensioen, ongeskiktheidspensioen, onderhoudstoelae (behalwe waar hy dit ontvang as die pleegouer of voog van 'n kind of kinders ten opsigte van wie dit betaal word), of gesinstoelae wat deur 'n staatsdepartement van die Republiek betaal word; 'n nedersetter op 'n nedersetting van die Staat wat die ontvanger is van 'n nedersetterstoelae wat betaal word onderworpe aan dieselfde middeletoets as wat op maatskaplik pensioentrekkers van toepassing is; en 'n inwoner van 'n staatstehuis of staatsondersteunde tehuis vir bejaardes en gestremdes of 'n kommersiële tehuis vir bejaardes en gestremdes wat namens die Staat bedryf word, mits sodanige inwoner tydens sy toelating tot sodanige staatstehuis, staatsondersteunde tehuis of kommersiële tehuis 'n pensioen of toelae in hierdie subparagraaf bedoel ontvang het of, as dit nie vir sy opname in die betrokke tehuis was nie, sou kon ontvang het.".

4. Paragraaf 5 van die Bylae tot die regulasies word hierby gewysig—

(a) deur in kolom 1 al die woorde na "Wet" te skrap;

(b) deur in kolom 2 die volgende paragrawe voor die bestaande paragraaf in te voeg:

"(1) R36 per volle lisensiejaar, ongeag die getal televisiestelle wat gebruik word, waar die lisensiehouer 'n natuurlike persoon is en die televisiestel of -stelle in sy private hoedanigheid gebruik of ander persone aldus toelaat om daardie televisiestel of -stelle te gebruik.

(2) R36 per volle lisensiejaar ten opsigte van elke televisiestel wat deur 'n besigheid of inrigting gebruik word of vir gebruik deur die werknemers, klante, inwoners, gaste of pasiënte van daardie besigheid of inrigting beskikbaar gestel word."; en

(c) deur in kolom 2 die woorde wat die bestaande paragraaf (a) voorafgaan, deur die volgende nommer en woorde te vervang:

"(3) Indien die verpligting om ten opsigte van 'n bykomende televisiestel lisensiegeld te betaal of om, na gelang van die geval, vir die eerste maal 'n lisensie uit te neem, ontstaan—".

5. Hierdie regulasies tree in werking met ingang van 1 Oktober 1980.

F. W. DE KLERK, Minister van Pos- en Telekommunikasiewese.

2. Regulation 1 of the regulations is hereby amended by substituting the following definition for the definition of "FM area" in subregulation (1):

" 'FM area' means the whole of the Republic, excluding the Magisterial Districts of Calitzdorp, Fraserburg, Gordonia (but not the municipal areas of Upington, Keimoes and Kakamas), Kenhardt (but not the municipal areas of Kenhardt and Pofadder), Steytlerville, Sutherland, Uniondale and Willowmore;".

3. Paragraph 3 of the Schedule to the regulations is hereby amended by substituting the following wording for the wording of subparagraph (a) in column 1:

"A recipient of an old age pension, war veteran's pension, disability pension, maintenance grant (except where he receives it as the foster-parent or guardian of a child or children in respect of whom it is paid), or family allowance which is paid by a Government department of the Republic; a settler in a State settlement who is the recipient of a settler's allowance paid subject to the same means test as that which applies to social pensioners; and an inmate of a State or State-supported home for the aged and handicapped persons or a commercial home for the aged and handicapped persons which is run on behalf of the State, provided that at the time of his admission to such State or State-supported home or commercial home such inmate had been in receipt of a pension or allowance referred to in this subparagraph or, but for his admission to the home concerned, could have been in receipt of such pension or allowance.".

4. Paragraph 5 of the Schedule to the regulations is hereby amended—

(a) by deleting all the words after "Act" in column 1;

(b) by inserting the following paragraphs before the existing paragraph in column 2:

"(1) R36 per full licence year, irrespective of the number of television sets used, where the licensee is a natural person and uses the television set or television sets in his private capacity or so permits other persons to use that television set or television sets.

(2) R36 per full licence year in respect of each television set used by a business or institution or made available for use by the employees, customers, inmates, guests or patients of that business or institution."; and

(c) by substituting the following number and words for the words preceding paragraph (a) in column 2:

"(3) If the obligation to pay a licence fee in respect of an additional television set or, as the case may be, to take out a licence for the first time, arises—".

5. These regulations shall come into operation with effect from 1 October 1980.

F. W. DE KLERK, Minister of Posts and Telecommunications.

DEPARTEMENT VAN SAMEWERKING EN ONTWIKKELING

No. R. 1773 29 Augustus 1980

INSTELLING VAN GEMEENSKAPSRADE VIR POTCHEFSTROOM EN ANDER STEDELIKE WOONGEBIEDE.—WYSIGING VAN GOEWERMENTSKENNISGEWING R. 865 VAN 1978

Ek, George de Villiers Morrison, Adjunk-minister van Samewerking, handelende namens en in opdrag van die Minister van Samewerking en Ontwikkeling, kragtens die bevoegdheid hom verleen by artikel 2 (5) van die Wet op Gemeenskapsrade, 1977 (Wet 125 van 1977), wysig met ingang van 29 Augustus 1980, die Bylae van Goewermentskennisgewing R. 865 van 1978 deur die uitdrukking "Biesiesvlei: No. 502 van 2 Maart 1951; No. 1816 van 2 November 1962." te skrap.

G. DE V. MORRISON, Adjunk-minister van Samewerking.

No. R. 1816 29 Augustus 1980

VORM VAN BEWYSBOEK.—HERBEPALING

Ek, Pieter Gerhardus Jacobus Koornhof, Minister van Samewerking en Ontwikkeling, kragtens die bevoegdheid my verleen by artikel 2 (1) van die Swartes (Afskaffing van Passe en Koördinering van Dokumente) Wet, 1952 (Wet 67 van 1952)—

(a) bepaal hierby dat die bewysboek wat aan manlike en vroulike Swartes uitgereik word, wesenlik in die vorm in onderskeidelik Bylaes 1 en 2 uiteengesit, moet wees; en

(b) trek hierby Goewermentskennisgewings R. 1611 van 1971 en R. 265 van 1972 in.

P. G. J. KOORNHOF, Minister van Samewerking en Ontwikkeling.

DEPARTMENT OF CO-OPERATION AND DEVELOPMENT

No. R. 1773 29 August 1980

ESTABLISHMENT OF COMMUNITY COUNCILS FOR POTCHEFSTROOM AND OTHER URBAN RESIDENTIAL AREAS. — AMENDMENT OF GOVERNMENT NOTICE R. 865 OF 1978

I, George de Villiers Morrison, Deputy Minister of Co-operation, acting on behalf of and by direction of the Minister of Co-operation and Development, under the powers vested in him by section 2 (5) of the Community Councils Act, 1977 (Act 125 of 1977), amend, with effect from 29 August 1980, the Schedule to Government Notice R. 865 of 1978 by the deletion of the expression "Biesiesvlei: No. 502 of 2 March 1951; No. 1816 of 2 November 1962.".

G. DE V. MORRISON, Deputy Minister of Co-operation.

No. R. 1816 29 August 1980

FORM OF REFERENCE BOOK.—REDETERMINATION

I, Pieter Gerhardus Jacobus Koornhof, Minister of Co-operation and Development, by virtue of the powers vested in me by section 2 (1) of the Blacks (Abolition of Passes and Co-ordination of Documents) Act, 1952 (Act 67 of 1952)—

(a) hereby determine that the reference book issued to Black males and females shall be substantially in the form set out in Schedules 1 and 2, respectively; and

(b) hereby withdraw Government Notices R. 1611 of 1971 and R. 265 of 1972.

P. G. J. KOORNHOF, Minister of Co-operation and Development.

University of Pretoria
Together in Excellence

BYLAE—SCHEDULE 1

REFERENCE BOOK—BEWYSBOEK

WARNING: It is an offence for any person who is not authorised or required thereto by law to make any entry in this book.

WAARSKUWING: Dit is 'n oortreding vir enige persoon wat nie by wet daartoe gemagtig of verplig is nie, om enige inskrywing in hierdie boek aan te bring.

INDEX—INDEKS

	Page Bladsy
A. (1) Residential address Woonadres	—
(2) Administration Administrasie	—
B. Employment Indiensneming	—
C. General and hospital tax Algemene en hospitaalbelasting	—
D. Local tax, levies and rates Plaaslike belasting en heffings	—
E. Additional particulars under regulation 17 (1) (v), Chapter II, Black Labour Regulations, 1965 Bykomende besonderhede ingevolge regulasie 17 (1) (v), Hoofstuk II, Swart Arbeidregulasies, 1965	—
F. Driver's licences Bestuurderslisensies	—
G. Licences to possess arms Lisensies om wapens te besit	—
H. Personal particulars Persoonlike besonderhede	—

SECTION A—AFDELING A

Residential address
Woonadres

Administration
Administrasie

SECTION B—AFDELING B

Employment
Indiensneming

Registration of employment:
Registrasie van indiensneming:

Compulsory endorsements by employer
Verpligte inskrywings deur werkgewer

Date of employment Datum van indiensneming	Date of discharge Datum van ontslag	Signature of employer Handtekening van werkgewer
.....	.....	.....
.....	.....	.....
.....	.....	.....
.....	.....	.....

SECTION C—AFDELING C

General and hospital tax
Algemene en hospitaalbelasting.....

SECTION D—AFDELING D

Local tax, tribal levies and rates
Plaaslike belasting, stam- en ander heffings.....

SECTION E—AFDELING E

Additional particulars under regulation 17 (1) (v), Chapter II, Black Labour Regulations, 1965
Bykomende besonderhede ingevolge regulasie 17 (1) (v), Hoofstuk II, Swart Arbeidregulasies, 1965.....

SECTION F—AFDELING F

Driver's licences
Bestuurderslisensies.....

SECTION G—AFDELING G

Licences to possess arms
Lisensies om wapens te besit.....

SECTION H—AFDELING H

Manlik/Male

Personal particulars:
Persoonlike besonderhede:

First names
Voornamen.....
Surname
Van.....
Ethnic group ..... Citizenship
Etniese groep ..... Burgerskap.....
Date/Year of birth ..... Number
Datum/Jaar van geboorte ..... Nommer.....

Republic of South Africa
(Coat of arms of R.S.A.)
Republiek van Suid-Afrika
(Wapen van R.S.A.)

Photograph
Foto

BYLAE—SCHEDULE 2

REFERENCE BOOK—BEWYSBOEK

WARNING: It is an offence for any person who is not authorised or required thereto by law to make any entry in this book.
WAARSKUWING: Dit is 'n oortreding vir enige persoon wat nie by wet daartoe gemagtig of verplig is nie, om enige inskrywing in hierdie boek aan te bring.

INDEX—INDEKS

	Page Bladsy
A. (1) Residential address Woonadres.....	—
(2) Administration Administrasie.....	—
B. Employment Indiensneming.....	—
C. Particulars of husband, parent or guardian Besonderhede van eggenoot, ouer of voog.....	—
D. Additional particulars under regulation 17 (1) (v), Chapter II, Black Labour Regulations, 1965 Bykomende besonderhede ingevolge regulasie 17 (1) (v), Hoofstuk II, Swart Arbeidregulasies, 1965.....	—
E. Driver's licences Bestuurderslisensies.....	—
F. Licences to possess arms Lisensies om wapens te besit.....	—
G. Personal particulars Persoonlike besonderhede.....	—

SECTION A—AFDELING A

Residential address
Woonadres.....

Administration
Administrasie.....

SECTION B—AFDELING B

Employment
Indiensneming.....

University of Fort Hare
Together in Excellence

Registration of employment:
Registrasie van indiensneming:

Compulsory endorsements by employer
Verpligte inskrywings deur werkgewer

Date of employment Datum van indiensneming	Date of discharge Datum van ontslag	Signature of employer Handtekening van werkgewer
.....	.....	.....
.....	.....	.....
.....	.....	.....
.....	.....	.....

SECTION C—AFDELING C

Particulars of husband, parent or guardian:
Besonderhede van eggenoot, ouer of voog:

(1) First names
Voorname .....
(2) Surname
Van .....
(3) Reference book number
Bewysboeknommer .....
(4) Relationship claimed
Verwantskap waarop aanspraak gemaak word .....

SECTION D—AFDELING D

Additional particulars under regulation 17 (1) (v), Chapter II, Black Labour Regulations, 1965.
Bykomende besonderhede ingevolge regulasie 17 (1) (v), Hoofstuk II, Swart Arbeidregulasies, 1965.

SECTION E—AFDELING E

Driver's licence
Bestuurslisensie .....

SECTION F—AFDELING F

Licences to possess arms
Lisensies om wapens te besit .....

SECTION G—AFDELING G

Female/Vroulik

Personal particulars:
Persoonlike besonderhede:

First names
Voorname .....
Surname
Van .....
Ethnic group
Etniese groep .....
Date/Year of birth
Datum/Jaar van geboorte .....

Citizenship
Burgerskap .....
Passport
Paspoort
Number
Nommer .....

Republic of South Africa
(Coat of arms of R.S.A.)
Republiek van Suid-Afrika
(Wapen van R.S.A.)

Photograph
Foto

University of Fort Hare
Together in Excellence

SUID-AFRIKAANSE WEERMAG

No. R. 1819 29 Augustus 1980

WYSIGING VAN DIE REGULASIES KRAGTENS ARTIKEL 8 VAN DIE WET OP BURGERLIKE BESKERMING, 1977 (WET 67 VAN 1977)

Dit het die Staatspresident behaag om kragtens die bevoegdheid hom verleen by artikel 8 van die Wet op Burgerlike Beskerming, 1977 (Wet 67 van 1977), die Regulasies betreffende Kategorieë van Persone wat nie bevoeg is om werksaamhede, waarvoor 'n Provinsiale Ordonnansie in verband met Burgerlike Beskerming voorsiening maak, te verrig nie, afgekondig by Goewermentskennisgewing R. 638 van 31 Maart 1978, soos gewysig deur Goewermentskennisgewing R. 356 van 2 Maart 1979, soos in die Bylae hierby uiteengesit, te wysig.

SOUTH AFRICAN DEFENCE FORCE

No. R. 1819 29 August 1980

AMENDMENTS TO THE REGULATIONS IN TERMS OF SECTION 8 OF THE CIVIL DEFENCE ACT, 1977 (ACT 67 OF 1977)

The State President has been pleased in terms of the powers vested in him by section 8 of the Civil Defence Act, 1977 (Act 67 of 1977), to amend the Regulations relating to Categories of Persons who are not competent to perform Functions provided for by a Provincial Ordinance in connection with Civil Defence promulgated under Government Notice R. 638 of 31 March 1978, as amended by Government Notice R. 356 of 2 March 1979, as set out in the Schedule hereto.

BYLAE

Regulasie 2 word hierby gewysig deur dit deur die volgende regulasie te vervang:

"2. (1) Niemand is bevoeg om enige werksaamheid in verband met burgerlike beskerming te verrig nie, indien hy—

(a) 'n lid van die Suid-Afrikaanse Polisie, die Polisiereserwe of die Reserwepolisiemag, soos omskryf in artikel 1 van die Polisiewet, 1958 (Wet 7 van 1958), is;

(b) 'n lid van die Suid-Afrikaanse Spoorwegpolisiemag, soos omskryf in artikel 57 (1) van die Konsolidasiewet op die Beheer en Bestuur van Spoorweë en Hawens, 1957 (Wet 70 van 1957), is;

(c) 'n persoon is wat beoog word in die omskrywing van "die Gevangenisdiens" in artikel 1 van die Wet op Gevangenisse, 1959 (Wet 8 van 1959);

(d) behoudens artikel 6 (a) van die Wet 'n lid van die Suid-Afrikaanse Weermag soos in artikel 5 van die Verdedigingswet, 1957 (Wet 44 van 1957), bedoel is;

(e) 'n lid van die Staandemagreserwe, soos in artikel 47 van die Verdedigingswet, 1957 (Wet 44 van 1957), bedoel is;

(f) 'n lid van die Reserwe van Offisiere, die Burgermagreserwe of die Kommandoreserwe, soos onderskeidelik in artikel 46, 48 en 48A van die Verdedigingswet, 1957 (Wet 44 van 1957), bedoel, is en wat vir 'n tydperk van minder as vyf jaar in sodanige reserwe gedien het;

(g) 'n lid is van 'n hulpdiens wat kragtens artikel 80 van die Verdedigingswet, 1957 (Wet 44 van 1957), vir die doeleindes van die Suid-Afrikaanse Weermag of enige doel daarvan ingestel en aangewys is;

(h) 'n werknemer soos omskryf in artikel 1 van die Wet op Krygstuigontwikkeling en -vervaardiging, 1968 (Wet 57 van 1968), is en wat krygstuig soos omskryf in artikel 1 van voormelde Wet vervaardig, herstel of in stand hou of wat 'n werksaamheid van die Krygstuigkorporasie van Suid-Afrika Beperk ingestel kragtens artikel 2 van voormelde Wet verrig: Met dien verstande dat die Hoof-Uitvoerende Beampte van die Krygstuigkorporasie van Suid-Afrika Beperk, na goeddunke, enige sodanige werknemer of kategorie van werknemers beskikbaar kan stel vir werksaamhede in verband met burgerlike beskerming;

(i) 'n lid van die Nasionale Instelligensiediens soos in artikel 3 van Wet 104 van 1978 bedoel, is: Met dien verstande dat die Direkteur-generaal: Nasionale Intelligensiediens, na goeddunke, enige sodanige lid of kategorie van lede beskikbaar kan stel vir werksaamhede in verband met burgerlike beskerming;

(j) 'n persoon is wat in 'n voltydse burgerlike hoedanigheid in die Suid-Afrikaanse Weermag dien.

(2) Nieteenstaande die bepalings van subregulasie (1), kan die Hoof van die Suid-Afrikaanse Weermag op aanbeveling van die hoof van die betrokke gevegsdiens, ondersteuningsdiens of stafafdeling en op die voorwaardes wat hy bepaal, verklaar dat enige lid of persone of 'n kategorie van lede of persone—

(a) in subregulasie (1) (d) bedoel, uitgesonderd 'n lid van die Staande Mag, bevoeg is om werksaamhede in verband met burgerlike beskerming te verrig;

(b) in subregulasie (1) (e), (f), (g) en (j) bedoel, bevoeg is om werksaamhede in verband met burgerlike beskerming te verrig;

SCHEDULE

Regulation 2 is hereby amended by the substitution thereof of the following regulation:

"2. (1) No person shall be competent to perform any function in connection with civil defence if he—

(a) is a member of the South African Police, the Police Reserve or the Reserve Police Force, as defined in section 1 of the Police Act, 1958 (Act 7 of 1958);

(b) is a member of the South African Railways Police Force as defined in section 57 (1) of the Railways and Harbours Control and Management (Consolidated) Act, 1957 (Act 70 of 1957);

(c) is a person as envisaged in the definition of "the Prison Service" in section 1 of the Prisons Act, 1959 (Act 8 of 1959);

(d) is, subject to section 6 (a) of the Act, a member of the South African Defence Force as referred to in section 5 of the Defence Act, 1957 (Act 44 of 1957);

(e) is a member of the Permanent Force Reserve as referred to in section 47 of the Defence Act, 1957 (Act 44 of 1957);

(f) is a member of the Reserve of Officers, the Citizen Force Reserve or the Commando Reserve, as respectively referred to in section 46, 48 and 48A of the Defence Act, 1957 (Act 44 of 1957), and who has served in such reserve for a period of less than five years;

(g) is a member of an auxiliary service established and designated in terms of section 80 of the Defence Act, 1957 (Act 44 of 1957), for the purposes of the South African Defence Force or any portion thereof;

(h) is an employee as defined in section 1 of the Armaments Development and Production Act, 1968 (Act 57 of 1968), and who manufactures, repairs or maintains armaments as defined in section 1 of the aforementioned Act or who carries out any function of the Armaments Corporation of South Africa Limited established in terms of section 2 of the aforementioned Act: Provided that the Chief Executive Officer of the Armaments Corporation of South Africa Limited may, at his discretion, make available any such employee or category of employees for functions in connection with civil defence;

(i) is a member of the National Intelligence Service as referred to in section 3 of Act 104 of 1978: Provided that the Director-General: National Intelligence Service may, at his discretion make available any such member or category of members for functions in connection with civil defence;

(j) is a person who is serving in a full-time civilian capacity in the South African Defence Force.

(2) Notwithstanding the provisions of subregulation (1), the Chief of the South African Defence Force may on the recommendation of the chief of the combat service, supporting service or staff division concerned and on the conditions determined by him, declare that a member or a person or a category of members or persons referred to in—

(a) subregulation (1) (d), excluding a member of the Permanent Force, shall be competent to perform functions in connection with civil defence;

(b) subregulation (1) (e), (f), (g) and (i), shall be competent to perform functions in connection with civil defence;

(c) in subregulasie (1) (f) bedoel, wat meer as vyf jaar in sodanige reserwe gedien het nie bevoeg is om enige werksaamheid in verband met burgerlike beskerming te verrig nie.".

P. W. BOTHA.

Wysigingsbladjie 2]

(c) subregulation (1) (f), who has served for more than five years in such reserve shall not be competent to perform any function in connection with civil defence.".

P. W. BOTHA.

Amendment slip 2]

AGROPLANTAE

Hierdie publikasie is 'n voortsetting van die Suid-Afrikaanse Tydskrif vir Landbouwetenskap Jaargang 1 tot 11, 1958–1968 en bevat artikels oor Akkerbou, Ekologie, Graskunde, Genetika, Landbouplantkunde, Landskapbestuur, Onkruidmiddels, Plantfisiologie, Plantproduksie en -tegnologie, Pomologie, Tuinbou, Weiding en Wynbou. Vier dele van die tydskrif word per jaar gepubliseer.

Verdienstelike landboukundige bydraes van oorspronklike wetenskaplike navorsing word vir plasing in hierdie tydskrif verwelkom. Voorskrifte vir die opstel van sulke bydraes is verkrygbaar van die Direkteur, Landbou-inligting, Privaatsak X144, Pretoria, aan wie ook alle navrae in verband met die tydskrif gerig moet word.

Die tydskrif is verkrygbaar van bogenoemde adres teen R1,50 per eksemplaar of R6 per jaar, posvry (Buitelands R1,75 per eksemplaar of R7 per jaar).

Verkoopbelasting moet by binnelandse bestellings ingesluit word.

AGROPLANTAE

This publication is a continuation of the South African Journal of Agricultural Science Vol. 1 to 11, 1958–1968 and deals with Agronomy, Ecology, Agrostology, Genetics, Agricultural Botany, Landscape Management, Herbicides, Plant Physiology, Plant Production and Technology, Pomology, Horticulture, Pasture Science and Viticulture. Four parts of the journal are published annually.

Contributions of scientific merit on agricultural research are invited for publication in this journal. Directions for the preparation of such contributions are obtainable from the Director, Agricultural Information, Private Bag X144, Pretoria, to whom all communications in connection with the journal should be addressed.

The journal is obtainable from the above-mentioned address at R1,50 per copy or R6 per annum, post free (Other [illegible]s R1,75 per copy or R7 per annum).

Sales tax must accompany inland orders.

Koop Nasionale Spaarsertifikate
Buy National Savings Certificates

PHYTOPHYLACTICA

Hierdie publikasie is 'n voortsetting van die Suid-Afrikaanse Tydskrif vir Landbouwetenskap Jaargang 1 tot 11, 1958–1968 en bevat artikels oor Entomologie, Dierkundige Plantplae, Nematologie, Plantpatologie, Mikrobiologie, Mikologie, Taksonomiese Studies, Biologie en Beheer. Vier dele van die tydskrif word per jaar gepubliseer.

Verdienstelike landboukundige bydraes van oorspronklike wetenskaplike navorsing word vir plasing in hierdie tydskrif verwelkom. Voorskrifte vir die opstel van sulke bydraes is verkrygbaar van die Direkteur, Landbou-inligting, Privaatsak X144, Pretoria, aan wie ook alle navrae in verband met die tydskrif gerig moet word.

Die tydskrif is verkrygbaar van bogenoemde adres teen R1,50 per eksemplaar of R6 per jaar, posvry (Buitelands R1,75 per eksemplaar of R7 per jaar).

Verkoopbelasting moet by binnelandse bestellings ingesluit word.

PHYTOPHYLACTICA

This publication is a continuation of the South African Journal of Agricultural Science Vol. 1 to 11 1958–1968 and deals with Entomology, Zoological Plant Pests, Nematology, Plant Pathology, Microbiology, Mycology, Taxonomic Studies, Biology and Control. Four parts of the journal are published annually.

Contributions of scientific merit on agricultural research are invited for publication in this journal. Directions for the preparation of such contributions are obtainable from the Director, Agricultural Information, Private Bag X144, Pretoria, to whom all communications in connection with the journal should be addressed.

The journal is obtainable from the above-mentioned address at R1,50 per copy or R6 per annum, post free (Other countries R1,75 per copy or R7 per annum).

Sales tax must accompany inland orders.

University of Fort Hare
Together in Excellence

DIE BLOMPLANTE VAN AFRIKA

Hierdie publikasie word uitgegee as 'n geïllustreerde reeks, baie na die aard van Curtis se "Botanical Magazine". Die doel van die werk is om die skoonheid en variasie van vorm van die flora van Afrika aan die leser bekend te stel, om belangstelling in die studie en kweek van die inheemse plante op te wek, en om plantkunde in die algemeen te bevorder.

Die meeste van die illustrasies word deur kunstenaars van die Navorsingsinstituut vir Plantkunde gemaak, dog die redakteur verwelkom geskikte bydraes van 'n wetenskaplike en kunsstandaard afkomstig van verwante inrigtings.

Onder huidige omstandighede word twee dele van die werk gelyktydig gepubliseer, maar met onreëlmatige tussenpose; elke deel bevat tien kleurplate. Intekengeld bedra R5 per deel (buitelands R5,25 per deel): Vier dele per band. Vanaf band 27 is die prys per band in linne gebind R30; in moroccoleer gebind R35. (Buitelands, linne gebind R31; moroccoleer R36).

Verkrygbaar van die Direkteur, Afdeling Landbouinligting, Privaatsak X144, Pretoria.

Verkoopbelasting moet by binnelandse bestellings ingesluit word.

THE FLOWERING PLANTS OF AFRICA

This publication is issued as an illustrated serial, much on the same lines as Curtis's Botanical Magazine, and for imitating which no apology need be tendered.

The desire and object of the promoters of the publication will be achieved if it stimulates further interest in the study and cultivation of our indigenous plants.

The illustrations are prepared mainly by the artists at the Botanical Research Institute, but the Editor welcomes contributions of suitable artistic and scientific merit from kindred institutions.

Each part contains 10 plates and costs R5 per part (other countries R5,25 per part). Two, three or four parts may be published annually, depending on the availability of illustrations. A volume consists of four parts. From Volume 27, the price per volume is: Cloth binding, R30; morocco binding, R35 (other countries, cloth binding R31; morocco binding R36).

Obtainable from the Director, Division of Agricultural Information, Private Bag X144, Pretoria.

Sales tax must accompany inland orders.

Koop Nasionale Spaarsertifikate

Buy National Savings Certificates

University of Fort Hare
Together in Excellence

THE ONDERSTEPOORT JOURNAL OF VETERINARY RESEARCH

Die "Onderstepoort Journal of Veterinary Research" word deur die Staatsdrukker, Pretoria, gedruk en is verkrygbaar van die Direkteur, Afdeling Landbou-inligting, Departement van Landbou-tegniese Dienste, Privaatsak X144, Pretoria, 0001, aan wie ook alle navrae in verband met die tydskrif gerig moet word.

Hierdie publikasie is 'n voortsetting van die "Reports of the Government Veterinary Bacteriologist of the Transvaal" wat terugdateer tot 1903 en waarvan 18 verskyn het tot 1932. Dit is gevolg deur 40 volumes van die "Onderstepoort Journal". Tans bestaan elke volume uit vier nommers wat teen R2 binnelands en R2,50 buitelands per nommer van bogenoemde adres verkrygbaar is.

Direkteure van laboratoriums ens. wat begerig is om publikasies om te ruil moet in verbinding tree met die Direkteur, Navorsings-instituut vir Veeartsenykunde, Pk. Onderstepoort, 0110, Republiek van Suid-Afrika.

Verkoopbelasting moet by binnelandse bestellings ingesluit word.

THE ONDERSTEPOORT JOURNAL OF VETERINARY RESEARCH

The Onderstepoort Journal of Veterinary Research is printed by the Government Printer, Pretoria, and is obtainable from the Director, Division of Agricultural Information, Department of Agricultural Technical Services, Private Bag X144, Pretoria, 0001, to whom all communications should be addressed.

This publication is a continuation of the Reports of the Government Veterinary Bacteriologist of the Transvaal which date back to 1903 and of which 18 have appeared up to 1932. These were followed by 40 volumes of the Onderstepoort Journal. At present each volume comprises four numbers which are obtainable at R2, other countries R2,50 per number from the above address.

Directors of laboratories etc. desiring to exchange publications are invited to communicate with the Director, Veterinary Research Institute, P.O. Onderstepoort, 0110, Republic of South Africa.

Sales tax must accompany inland orders.

INHOUD

No.		Bladsy No.	Staatskoerant No.
	PROKLAMASIES		
R. 151	Bemarkingswet (59/1968): Tabakskema: Wysiging	1	7200
R. 152	do.: Aartappelskema: Wysiging	2	7200
R. 153	do.: Skema vir Inmaakvrugte: Wysiging	3	7200
R. 154	do.: Droëboneskema: Wysiging	4	7200
R. 155	do.: Droëvrugteskema: Wysiging	5	7200
R. 156	do.: Sigoreiskema: Wysiging	7	7200
R. 157	do.: Sybokhaarskema: Wysiging	7	7200
R. 158	do.: Katoenskema: Wysiging	8	7200
R. 159	Verdedigingswet (44/1957): Wysiging van die Eerste Bylae	9	7200
	GOEWERMENTSKENNISGEWINGS		
	Finansies, Departement van		
	Goewermentskennisgewings		
R. 1781	Doeane- en Aksynswet (91/1964): Wysiging van Bylae 1 (No. 1/1/703)	12	7200
R. 1782	do.: Wysiging van Bylae 1 (No. 1/1/704)	12	7200
R. 1783	do.: Wysiging van Bylae 1 (No. 1/1/705)	11	7200
R. 1784	do.: Wysiging van Bylae 3 (No. 3/636)	13	7200
	Handel en Verbruikersake, Departement van		
	Goewermentskennisgewing		
R. 1814	Wet op Prysbeheer (25/1964): Voorwaardes met betrekking tot Bêrekoopooreenkomste: Wysiging	13	7200
	Mannekragbeontting, Departement van		
	Goewermentskennisgewings		
R. 1818	Wet op Nywerheidsversoening (28/1956): Elektrotegniese Nywerheid (Natal): Wysiging van Siektebystandsfondsooreenkoms.	14	7200
R. 1821	Wet op Nywerheisversoening (28/1956): Klerasienywerheid (Kaap): Wysiging van Hoofooreenkoms	16	7200
R. 1822	do.: do.: Wysiging van Ooreenkoms vir Brei-afdeling	18	7200
R. 1823	do.: do.: Wysiging van Ooreenkoms vir Plattelandse Gebiede	19	7200
R. 1824	do.: Diamantslypnywerheid, S.A.: Hernuwing van Afbakeningsooreenkoms	20	7200
R. 1825	do.: Lekkergoednywerheid (Kaap): Wysiging van Hoofooreenkoms	20	7200
	Pos- en Telekommunikasiewese, Departement van		
	Goewermentskennisgewing		
R. 1817	Uitsaaiwet (73/1976): Wysiging van regulasies	22	7200
	Samewerking en Ontwikkeling, Departement van		
	Goewermentskennisgewings		
R. 1773	Wet op Gemeenskapsrade (125/1977): Potchefstroom en ander stedelike woongebiede: Wysiging	24	7200
R. 1816	Swartes (Afskaffing van Passe en Koördinering van Dokumente) Wet (67/1952): Vorm an vewysboek: Herbepaling	24	7200
	Suid-Afrikaanse Weermag		
	Goewermentskennisgewing		
R. 1819	Wet op Burgerlike Beskerming (67/1977): Wysiging van regulasies	26	7200

CONTENTS

No.		Page No.	Gazette No.
	PROCLAMATIONS		
R. 151	Marketing Act (59/1968): Tobacco Scheme: Amendment	1	7200
R. 152	do.: Potato Scheme: Amendment	2	7200
R. 153	do.: Canning Fruit Scheme: Amendment	3	7200
R. 154	do.: Dried Bean Scheme: Amendment	4	7200
R. 155	do.: Dried Fruit Scheme: Amendment	5	7200
R. 156	do.: Chicory Scheme: Amendment	7	7200
R. 157	do.: Mohair Scheme: Amendment	7	7200
R. 158	do.: Cotton Scheme: Amendment	8	7200
R. 159	Defence Act (44/1957): Amendments of the First Schedule	9	7200
	GOVERNMENT NOTICES		
	Commerce and Consumer Affairs, Department of		
	Government Notice		
R. 1814	Price Control Act (25/1964): Conditions applicable to Lay-by Agreements: Amendment	13	7200
	Co-operation and Development, Department of		
	Government Notices		
R. 1773	Community Councils Act (125/1977): Potchefstroom and other urban residential areas: Amendment	24	7200
R. 1816	Blacks (Abolition of Passes and Co-ordination of Documents) Act (67/1952): Form of reference book: Redetermination	24	7200
	Finance, Department of		
	Government Notices		
R. 1781	Customs and Excise Act (91/1964): Amendment of Schedule 1 (No. 1/1/703)	12	7200
R. 1782	do.: Amendment of Schedule 1 (No. 1/1/704)	12	7200
R. 1783	do.: Amendment of Schedule 1 (No. 1/1/705)	11	7200
R. 1784	do.: Amendment of Schedule 3 (No. 3/636)	13	7200
	Manpower Utilisation, Department of		
	Government Notices		
R. 1818	Industrial Conciliation Act (28/1956): Electrical Industry (Natal): Amendment of Sick Pay Fund Agreement	14	7200
R. 1821	Industrial Conciliation Act (28/1956): Clothing Industry (Cape): Amendment of Main Agreement	16	7200
R. 1822	do.: do.: Amendment of Agreement for Knitting Division	18	7200
R. 1823	do.: Amendment of Agreement for Country Areas	19	7200
R. 1824	do.: Diamond Cutting Industry of S.A.: Renewal of Demarcation Agreement	20	7200
R. 1825	do.: Sweetmaking Industry (Cape): Amendment of Main Agreement	20	7200
	Posts and Telecommunications, Department of		
	Government Notice		
R. 1817	Broadcasting Act (73/1976): Amendment of regulations	22	7200
	South African Defence Force		
	Government Notice		
R. 1819	Civil Defence Act (67/1977): Amendment of regulations	26	7200

University of Fort Hare
Together in Excellence

720 I

University of Fort Hare
Together in Excellence

STAATSKOERANT
VAN DIE REPUBLIEK VAN SUID-AFRIKA

REPUBLIC OF SOUTH AFRICA
GOVERNMENT GAZETTE

PRYS + 1c AVB 20c PRICE + 1c GST

As 'n Nuusblad by die Poskantoor Geregistreer BUITELANDS 30c ABROAD *Registered at the Post Office as a Newspaper*

POSVRY · POST FREE

Vol. 182] PRETORIA, 29 AUGUSTUS / AUGUST 1980 [No. 7201

AANSOEKE OM OPENBARE PADVERVOERPERMITTE

Die onderstaande aansoeke om openbare padvervoerpermitte, met aanduiding van (1) verwysingsnommer, (2) naam van applikant en aard van aansoek, (3) getal en tipe voertuie, (4) aard van voorgestelde padvervoer, en (5) plekke waartussen en roetes waarvoor of gebied waarin die voorgestelde vervoer sal plaasvind, word kragtens die bepalings van artikel 14 (1) van die Wet op Padvervoer, 1977 (No. 74 van 1977), gepubliseer.

Ingevolge regulasie 4 (2) van die Padvervoerregulasies, 1977, moet skriftelike vertoë ter ondersteuning of bestryding van hierdie aansoeke in viervoud binne 10 (tien) dae vanaf die datum van hierdie publikasie aan die aangeduide adres gerig word.

APPLICATIONS FOR PUBLIC ROAD CARRIER PERMITS

The undermentioned applications for public road carrier permits indicating (1) reference number, (2) name of applicant and nature of application, (3) number and type of vehicles, (4) nature of proposed road transport, and (5) points between and routes over or area within which the proposed conveyance is to be effected, are published in terms of section 14 (1) of the Road Transportation Act, 1977 (No. 74 of 1977).

Written representations, supporting or opposing these applications must be submitted in terms of regulation 4 (2) of the Road Transportation Regulations, 1977, in quadruplicate, to address indicated, within 10 (ten) days from the date of this publication.

PIETERMARITZBURG

Adres waarheen vertoë gerig moet word: Die Sekretaris, Plaaslike Padvervoerraad, Privaatsak X9015, Pietermaritzburg, 3200.

Address to which representations must be submitted: The Secretary, Local Road Transportation Board, Private Bag X9015, Pietermaritzburg, 3200.

S299 (OP314)—Re-gazette, GOUDINI FARM. (2) Abdool Kader Ebrahim Amodjee, Verdriet Farm, Dannhauser; additional vehicle. (3) One mini bus to be acquired. (4) Non-White passengers and their personal effects. (5) From the farm Goudini then through the farm Verdriet in the Distict of Dannhauser along unnumbered road to where it meets Road D280 then right along that road to its junction with Road 3R then left along that road to its junction with Road 36 then right along that road to the Dannhauser Bus Terminus and return along the same route.

Time-table: As and when required.

Scale of charges:

15c per adult (single journey) between Goudini and Dannhauser.
10c per adult (single journey) between Verdriet and Dannhauser.

S408 (OP435)—OSIZWENI. (2) Zakhe Sydney Madela, trading as Madela Taxi Service, Dladla Restaurant, Osizweni; transfer from Nimrod Mthethwa—PP117632. (3) One sedan—NN 5756. (4) Black taxi passengers and their personal effects. (5) From points within a radius of 5 km of Dladla Restaurant, Osizweni to points within a radius of 50 km of Dladla Restaurant, Osizweni, and from points within a radius of 50 km of Dladla Restaurant, Osizweni to points within a radius of 5 km of Dladla Restaurant, Osizweni. Subject to the condition that no passengers be conveyed to and from Newcastle.

S431 (OP442)—LADYSMITH. (2) Osman Ismail Vawda, trading as Burford Bus Service, 51 Forbes Street, Ladysmith; amendment of timetable and interchangeability. (3) Six existing buses. (4) (a) Non-White organised parties (pro forma). (5) (a) Within a radius of 240 km from Burford. (4) (b) Non-White passengers and their personal effects. (5) (b) Between Ladysmith and Burford via National Road 3, Limit Hill, Kleinfontein Road and Burford Rail Crossing and return along the same road.

Time-table

No. 1

Mondays to Saturdays

Depart		*Arrive*	
Burford	04h15	C.F.C.C.	04h55
C.F.C.C.	05h00	Burford	05h40
Burford	05h50	C.F.C.C.	06h30
C.F.C.C.	06h30	Ladysmith	06h35
Ladysmith	06h35	Burford	07h15
Burford	09h00	Ladysmith	09h40
Ladysmith	17h00	Burford	17h40

No. 2

Mondays to Saturdays

Depart		*Arrive*	
Burford	05h15	C.F.C.C.	05h55
C.F.C.C.	06h15	Burford	06h55
Burford	06h50	Ladysmith	09h30
Ladysmith	13h45	Burford	14h25
Burford	15h00	Ladysmith	15h40
Ladysmith	15h45	Burford	16h25
Burford	16h30	Ladysmith	17h10
Ladysmith	17h30	Burford	18h10

No. 3

Mondays to Saturdays

Depart		*Arrive*	
Burford	06h15	Ladysmith	06h55
Ladysmith	14h45	Burford	15h25
Burford	16h00	Ladysmith	16h40
Ladysmith	18h00	C.F.C.C.	18h05
C.F.C.C.	18h15	Burford	18h55

No 4

Depart		Arrive	
Burford	05h30	John Gordon	06h10
John Gordon	06h10	Ladysmith	06h20
Ladysmith	06h20	Burford	07h00
Burford	07h05	Ladysmith	07h45
Ladysmith	15h00	Burford	15h40
Burford	15h50	Ladysmith	16h30
Ladysmith	16h40	Burford	17h20
Burford	17h30	Ladysmith	18h10
Ladysmith	18h30	Burford	19h10

No. 5

Mondays to Saturdays

Depart		Arrive	
Burford	04h45	Ladysmith	05h25
Ladysmith	05h00	Burford	06h10
Burford	06h15	Ladysmith	06h55
Ladysmith	11h15	Burford	11h55
Burford	12h15	Ladysmith	12h55
C.F.C.C.	17h00	Burford	17h40
Burford	17h45	Ladysmith	18h25
Ladysmith	18h45	Burford	19h25

No. 6

Mondays to Saturdays

Depart		Arrive	
Burford	06h20	Ladysmith	07h00
Ladysmith	16h30	Burford	17h10
Burford	17h20	Ladysmith	18h00
Ladysmith	18h05	C.F.C.C.	18h10
C.F.C.C.	18h20	Burford	19h00

No. 7

Sundays

Depart		Arrive	
Burford	04h30	C.F.C.C.	05h10
C.F.C.C.	06h15	Burford	06h55
Burford	16h15	C.F.C.C.	16h55
C.F.C.C.	18h15	Burford	18h55

No. 8

Sundays

Depart		Arrive	
Burford	04h45	C.F.C.C.	05h25
C.F.C.C.	06h20	Burford	07h00
Burford	13h00	C.F.C.C.	13h40
C.F.C.C	14h20	Burford	15h00
Burford	16h15	Ladysmith	16h55
Ladysmith	17h30	Burford	18h10

No. 9

(a) Time-tables subject to weather conditions and conditions beyond the control of the operator.

(b) Additional trips as and when required.

Scale of charges:

Ladysmith to Limit Hill: 3 km—10c.
Limit Hill to Burford Crossing: 14 km—28c.
Burford Crossing to Burford: 4 km—10c
Ladysmith to Burford: 21 km—42c.

S432 (OP461)—TUGELA FERRY. (2) Walter Sipha Malinga, 918 White City Location, Ladysmith; replacement of PP102605. (3) One minibus—NKR 13715. (4) Black taxi passengers and their personal effects. (5) From points within a radius of 5 km from Empondweni Trading Store, District of Tugela Ferry, to points within a radius of 50 km from Empondweni Trading Store, District of Tugela Ferry, and from points within a radius of 50 km from Empondweni Trading Store, District of Tugela Ferry, to points within a radius of 5 km from Empondweni Trading Store, District of Tugela Ferry. (Vehicle to be stationed at and operated from Empondweni Trading Store, Tugela Ferry, District of Msinga.)

S433 (OP468)—IMBALI. (2) Almon S. Myeza, Imbali Township; replacement of PP117603 (3) One panel van—NP 38238. (4) Black taxi passengers and their personal effects. (5) Within a radius of 50 km from the taxi rank at Imbali, Stage One, Shopping Centre, Imbali Black Township.

S434 (OP469)—LADYSMITH. (2) Ismail Hassa, 38 Illing Road, Ladysmith; replacement of OP36282. (3) One combi—NKR 531. (4) Non-White taxi passengers and their personal effects. (5) (a) On trips within a radius of 50 km from Ladysmith Post Office; and (5) (b) on casual trips from within the area described in (a) above

S435 (OP460)—DANNHAUSER. (2) Mohamed Suliman Desai, Main Road, Dannhauser; replacement of PP80918. (3) One bus—NDH 1414. (4) (a) Non-White passengers and their personal effects. (4) (b) Non-White organised parties (pro forma). (5) (a) and (b) Over/within existing approved routes/areas and in accordance with existing approved time-table and scale of charges and conditions.

S436 (OP466)—UNDERBERG. (2) Mokhotlong Mountain Transport (Pty) Ltd, Sub 8 of farm Good Hope, Himeville; replacement of PP57910, PP117668, PP117666 (3) Two lorries—LJ 114, LJ 164, NUD 2176 and one bus—NUD 2176. (4) White tourists and their personal effects and goods all classes as per existing approved authority. (5) Over/within existing approved routes/areas and in accordance with existing approved time-table and scale of charges and conditions.

S437 (OP464)—LADYSMITH. (2) John Dennis Thorley, 23 Progress Road, Ladysmith, amended (additional) authority. (3) Four existing vehicles and 1 additional vehicle. (4) (i) Goods on behalf of South African Breweries Ltd. (5) (i) Within a radius of 80 km from the places of business of South African Breweries Ltd at (i) Ladysmith; (ii) Vryheid; (iii) Empangeni; (iv) Pietermaritzburg; (v) Durban; (vi) Port Shepstone: Provided that no through conveyance is undertaken between the above-mentioned places of business. (4) (ii) Goods on behalf of South African Breweries Ltd. (5) (ii) Within a radius of 80 km from the Dundee Main Post Office. (4) (iii) Own employees free of charge. (5) (iii) Between the holder's place of business situated at Progress Road, Ladysmith, and any place where they are to be employed in the course of the holder's business. (4) (iv) Employees of South African Breweries Ltd, free of charge. (5) (iv) Between South African Breweries Ltd place of business and any place where they are to be employed in the course of South African Breweries Ltd business. (4) (v) Goods on behalf of South African Breweries Ltd. (5) (v) Between Pietermaritzburg and Estcourt.

S438 (OP465)—LADYSMITH. (2) Krishna Sewpal, trading as K.R P. Fresh Produce Wholesalers, 6 Centenary Road, Ladysmith; new application. (3) Two lorries—NKR 7526 and NKR 7529. (4) Nuts, bolts, rivets and processed rubber in containers. (5) Ladysmith to Johannesburg only.

S439 (OP471)—HIGHFLATS. (2) Krishna Letchminarian Maharaj, Main Road, Highflats; replacement of PP81652. (3) One bus to be acquired (4) (a) Non-White passengers and their personal effects. (4) (b) Non-White organised parties (pro forma). (5) (a) and (b) Over/within existing approved routes/areas and in accordance with existing approved time-table, scale of charges and conditions.

S440 (OP467)—PIETERMARITZBURG. (2) Circle Line Transport (Pty) Ltd, 29 Woodlands Road, Pietermaritzburg; change of name from O. A. Crouch (Pty) Ltd. (3) Sixteen existing vehicles. (4) Goods as per existing approved authority held by O. A. Crouch (Pty) Ltd. (5) Over/within existing approved routes/areas and in accordance with existing approved conditions.

S441 (OP470)—KLIP RIVER. (2) Precoot Soadezi, Engonini Area Mbulwane; new application. (3) One motor-car—NKR 4974. (4) Black taxi passengers and their personal effects. (5) From Engonini Kraal, District of Klip River to points within the Magisterial District of Klip River.

S442 (OP472)—BURFORD. (2) Phillip Lashaba, Burford School, Ladysmith; new application. (3) One combi—NKR 14834. (4) Black taxi passengers and their personal effects. (5) From Burford School, Burford, District of Klip River, to points within a radius of 50 km and return.

S443 (OP455)—PAULPIETERSBURG. (2) Mzizi Reuben Dhlodhlo, 13028939/3, Paulpietersburg Location; amended (additional) authority. (3) One micro-bus—NPP 759. (4) Black taxi passengers and their personal effects. (5) Within a radius of 50 km from Paulpietersburg and return.

S444 (OP477)—KEATE'S DRIFT. (2) Wakhe Hezekia Zakwe, Keatsdrift Store, P.O. Keate's Drift; replacement of PP56402. (3) One motor-car—NUM 4480. (4) Black taxi passengers and their personal effects. (5) From points within a radius of 5 km from Egalibasi School to points within a radius of 50 km from Egalibasi School at Keate's Drift.

S445 (OP479)—NQUTU. (2) Timothy Mdlaloze, 1-3698336-3 Mhlungwane Store, Vryheid; replacement of PP56150. (3) One Hi-ace—NTU 110. (4) Black taxi passengers and their personal effects. (5) From points within a radius of 5 km. from Mhlungwane Store in the District of Nqutu to points within a radius of 50 km from Mhlungwane Store in the District of Nqutu and return. (Vehicle to be stationed at and operated from Mhlungwane Store.)

S446 (OP474)—LADYSMITH. (2) Ernest Reginald Roeenburg, 26 Seventh Street, Limit Hill, Ladysmith; transfer from Ranagopaul Naidoo, PP55501. (3) Vehicle to be acquired. (4) Non-White taxi passengers and their personal effects (5) (a) On trips within a radius of 50 km from the Post Office at Ladysmith, and (5) (b) on casual trips from within the area described in (a) above.

S447 (OP475)—MOUNTAIN VIEW. (2) Kentshi Florence Mathunjwa, 52769167-5, 8530 Madadeni; transfer from Samuel Xaba PP102554. (3) Vehicle to be acquired (4) Non-White taxi passengers and their personal effects. (5) On trips within a radius of 10 km from Mountain View to the Magisterial Districts of Newcastle and Dundee and return.

University of Pretoria
Tuksiana
Excellence

S448 (OP473)—BERGVILLE. (2) Victor Zungu, 1-3990140-7, Okhambe B.C. School, Bergville; new application. (3) Eight passenger vehicle to be acquired. (4) Black taxi passengers. (5) From points within a radius of 5 km from Okhombe B.C. School, Okhambe Location, Bergville to points within a radius of 50 km from Okhombe B.C. School Okhombe Location, Bergville, and from points within a radius of 50 km from Okhombe B.C. School, Okhombe Location, Bergville, to points within a radius of 5 km from Okhombe B.C. School Okhombe Location, Bergville.

S449 (OP480)—NQUTU. (2) Wilmot Ndlovu, 13851855-8, Ncepeni B.C. School, Private Bag, Nqutu; transfer from Timothy Mdlalose PP56150. (3) One Hi-ace—NTU 110. (4) Black taxi passengers and their personal effects. (5) From points within a radius of 5 km from Mhlungwane Store in the District of Nqutu to points within a radius of 50 km from Mhlungwane Store in the District of Nqutu and return. (Vehicle to be stationed at and operated from Mhlungwane Store.)

S450 (OP482)—CAMPERDOWN. (2) Zacharia Fanyana Buthelezi, 1-0634129-4, Inchanga R.C. Mission, Inchanga; new application. (3) One motor-car—NC 11160. (4) Black taxi passengers and their personal effects. (5) From points within the Magisterial District of Camperdown, including Mpumalanga Township to points within a radius of 50 km from Inchanga and return.

S452 (OP488)—EZAKHENI. (2) Jan Nhlapo, 1-3965-392-0, 1194A Ezakheni, Ladysmith; replacement of PP117363. (3) One micro-bus—NKR 1370. (4) Black taxi passengers and their personal effects. (5) From the Magistrate's Court at Ezakheni Township to points within a radius of 50 km from the Magistrate's Court at Exakheni and from points within a radius of 50 km from the Magistrate's Court at Ezakheni Township to the Magistrate's Court at Ezakheni Township. (Vehicle to be stationed at and operated from the Magistrate's Court at Ezakheni.)

S453 (OP487)—MADADENI. (2) Hanson Tshabalala, 8558 Madadeni; replacement of PP81043. (3) One combi—NN 17964. (4) Black taxi passengers and their personal effects. (5) Within the boundaries of the Madadeni Township.

S454 (OP486)—P.O. MADADENI. (2) Joseph Nkosi, 4048 Madadeni; replacement PP117494. (3) One combi—NN 6466. (4) Black taxi passengers and their personal effects. (5) On trips within a radius of 25 km from Madadeni, Newcastle.

S455 (OP485)—MPUMALANGA. (2) Joseph Khanyile, Mpumalanga Township; replacement of PP56885. (3) One combi—NC 8278. (4) Black taxi passengers and their personal effects. (5) Within a radius of 50 km from Section 1, Mpumalanga Township, Hammarsdale.

S456 (OP484)—PIETERMARITZBURG. (2) City of Pietermaritzburg, corner of Abattoir Road and Kershaw Street, Pietermaritzburg; amended (additional) authority and additional vehicles. (3) One hundred and ninety-five existing vehicles and 13 additional vehicles to be advised. (4) Non-White passengers and their personal effects.

Existing authority:

(5) Over/within existing approved routes/areas and in accordance with existing approved, time-table and scale of charges and conditions.

Amended authority

As per attached Annexure.

CITY OF PIETERMARITZBURG

PASSENGER TRANSPORT DEPARTMENT

IMBALI STAGE I AND II PLUS UNIT 13

EDENDALE SERVICE

Monday to Sunday and public holidays

Time-table

With the right to increase or decrease services as and when required.

Depart Imbali			*Depart Edendale*	*Arrive Imbali*		
Unit 13	*Stage II*	*Stage I*	*Terminus*	*Stage I*	*Stage II*	*Unit 13*
06h30	06h35	06h45	07h00	07h15	07h20	07h30
07h30	07h35	07h45	08h00	08h15	08h20	08h30
08h30	08h35	08h45	09h00	09h15	09h20	09h30
09h30	09h35	09h45	10h00	10h15	10h20	10h30
10h30	10h35	10h45	11h00	11h15	11h20	11h30
11h30	11h35	11h45	12h00	12h15	12h20	12h30
12h30	12h35	12h45	13h00	13h15	13h20	13h30
13h30	13h35	13h45	14h00	14h15	14h20	14h30
14h30	14h35	14h45	15h00	15h15	15h20	15h30
15h30	15h35	15h45	16h00	16h15	16h20	16h30
16h30	16h35	16h45	17h00	17h15	17h20	17h30
17h30	17h35	17h45	18h00	18h15	18h20	18h30
18h30	18h35	18h45	19h00	19h15	19h20	19h30
19h30	19h35	19h45	20h00	20h15	20h20	20h30

Route description: Route from Imbali Unit 13 Outer Bus Terminus then via the unnamed roads in Imbali Unit 13 (i.e. via Bus Route) as far as Impala Road, then via Impala Road, Sinkwazi Road to the Outer Terminus Imbali State II then via Sinkwazi Road, Sikali Road, Mthomboti Road, Sibubu Road, Sutherland Road, Edendale Road, to the Edendale Outer Terminus.

Return route from the Edendale Outer Terminus in the reverse to the above route.

Fare structure:

Adult: 17c, child: 11c flat.

S457 (OP484)—PIETERMARITZBURG. (2) City of Pietermaritzburg, c/n Abattoir and Kershaw Streets, Pietermaritzburg; replacement of vehicles. (3) Fifty-five buses. (4) Non-White passengers and their personal effects. (5) Over/within existing approved routes/areas and in accordance with existing approved time-table, scale of charges and conditions.

S458 (OP481)—GARTREFF STORE. (2) Harrichand Maharaj, Main Road, Brarmer; transfer from Haroon Ismail PP57377. (3) One bus—NX 1396. (4) As per Annexure A. (5) As per Annexure A.

ANNEXURE A

Black passengers and their personal effects from Gartreff Store to Richmond along Road D172 via Jeewa's Store, then turn right at Lockwood Hall into Road 113, along Road 113 to junction of Road D340 and Road 113, turn right into D340 up to Springvale Mission and back along Road D340 to Road 113, turn right into Road 113 to junction of Road 113 and Road NR10/4, then along Road NR10/4 to Richmond and return along the same route, subject to the restriction that on the forward journey no passengers will be allowed to embark or disembark between Mimosa Brae and Richmond and on the return journey no passengers will be allowed to embark or disembark between Richmond and Mimosa Brae.

Time-table

Forward journey

Depart		*Arrive*	
Gartreff Store	07h30	Jeewa's Store	07h50
Jeewa's Store	07h55	Hall	08h00
Hall	08h05	Springvale Mission	08h20
Springvale Mission	08h25	Nhlavini	08h35
Nhlavini	08h40	Mimosa Brae	09h00
Mimosa Brae	09h15	Richmond	10h00

Return journey

Depart		*Arrive*	
Richmond	13h00	Mimosa Brae	13h45
Mimosa Brae	13h50	Nhlavini	14h00
Nhlavini	14h05	Springvale Mission	14h15
Springvale Mission	14h20	Hall	14h35
Hall	14h40	Jeewa's Store	14h45
Jeewa's Store	14h50	Gartreff Store	15h00

Scale of charges:

Gartreff Store to Jeewa's Store: 3 km—10c.
Jeewa's Store to Hall: 3 km—10c.
Hall to Springvale Mission: 4 km—20c.
Springvale Mission to Nhlavini: 6 km—20c.
Nhlavini to Mimosa Brae: 2 km—10c.
Mimosa Brae to Richmond: 24 km—30c.

S459 (OP462)—MONDLO. (2) Enos Dlamini, trading as Mondlo Bus Service, 1840289, Mondlo Black Township; amendment of tariffs. (3) Two existing buses—NTU 4748 and NTU 666. (4) Black passengers and their personal effects.

NTU 748:

(5) (i) As per attached Annexure A.

NTU 666:

(5) (ii) As per attached Annexure B.

ANNEXTURE A

NTU 748:

Black passengers and their personal effects from Mondlo Black Township to Nqutu via Mvunyane, Ntshibentshibe, Ntabobomvu, Mdlalose, Thelezini Store, Ekrosini, Gumbi and Mbutha and return over the same route.

Time-table

Depart		*Arrive*	
Mondlo	07h15	Nqutu	08h45
Nqutu	10h00	Mondlo	11h15
Mondlo	14h00	Nqutu	15h15
Nqutu	16h30	Mondlo	17h45
Mondlo	18h00	Ntabobomvu	18h30

Scale of charges

	Existing	*Proposed*
Mondlo to Nqutu	50c	70c
Mvunyane to Nqutu	40c	60c
Ntshibentshibe to Nqutu	40c	60c
Ntshiyane to Nqutu	35c	50c
Mdlalose to Nqutu	35c	50c
Thelezini to Nqutu	35c	50c
Khumalo to Nqutu	30c	50c

	Existing	Proposed
Mtshali to Nqutu	25c	40c
Masondo to Nqutu	25c	40c
Thelezine Store to Nqutu	20c	30c
Pitso to Nqutu	20c	25c
Ekrosini to Nqutu	20c	25c
Bhiya to Nqutu	15c	20c
Diphini to Nqutu	15c	20c
Gumbi to Nqutu	10c	15c
Mbatha to Nqutu	10c	15c

ANNEXURE B

NTU 666:

Black passengers and their personal effects from Mondlo to Nqutu via Ntabebomvu and return.

Time-table

Departure		*Arrival*	
Mondlo	06h00	Nqutu	07h00
Nqutu	07h10	Mondlo	08h10
Mondlo	08h30	Nqutu	09h30
Nqutu	11h00	Mondlo	12h00
Mondlo	13h00	Nqutu	14h00
Nqutu	14h30	Mondlo	15h30
Mondlo	16h00	Nqutu	17h00
Nqutu	17h10	Mondlo	18h10
Mondlo	18h30	Ntabebomvu	19h00

Scale of charges

	Existing	Proposed
Mondlo to Nqutu	40c	30c
Ntshibantshibe to Nqutu	35c	25c
Mvunyane to Mondlo	15c	25c
Mchinswane to Mondlo	10c	10c
Mondlo to Nqutu	40c	70c
Mvunyane to Nqutu	35c	60c
Ntshibantshibe to Nqutu	35c	60c
Ntshiyane to Nqutu	30c	50c
Thelezini to Nqutu	30c	50c
Khumalo to Nqutu	30c	50c
Mtshali to Nqutu	25c	40c
Masondo to Nqutu	25c	40c
Thelezini Store to Nqutu	20c	30c
Pitso to Nqutu	20c	25c
Ekrosini to Nqutu	20c	25c
Bhiya to Nqutu	15c	20c
Gumbi to Nqutu	10c	15c
Mbatha to Nqutu	10c	15c

JOHANNESBURG

Adres waarheen vertoë gerig moet word: Die Sekretaris, Plaaslike Padvervoerraad, Privaatsak X12, Johannesburg, 2000.

Address to which representations must be submitted: The Secretary, Local Road Transportation Board, Private Bag X12, Johannesburg, 2000.

OP533/A17971—GERMISTON. (2) Tanker Services (Pty) Ltd, Germiston; amendment (replacement of vehicles). (3) One hundred and fifteen goods vehicles. (4) Replacement of vehicles. (5) To obtain the same authority as held by vehicles to be replaced.

OP532/A17971—GERMISTON. (2) Tanker Services (Pty) Ltd, Germiston; additional vehicles. (3) Thirty goods vehicles. (4) Goods. (5) As per existing authority.

OP539/A17600—WADEVILLE. (2) Lombards Transport (Tvl) (Pty) Ltd, Wadeville; amendment (replacement of vehicles PP107805—TG 25984, PP110980—TG 55282. (3) Two goods vehicles. (4) Replacement of vehicles. (5) To obtain the same authority as held by vehicles to be replaced.

OP536/A6629B—SPRINGS. (2) Stadsraad van Springs, Springs; wysiging (vervanging van voertuie PP106241—TS 13025, PP106227—TS 21894, PP106230—TS 21897. (3) Drie busse. (4) Vervanging van voertuie. (5) Om dieselfde magtiging te bekom soos gehou deur voertuie wat vervang staan te word.

OP531/A2054—WAKKERSTROOM. (2) C. Simelane, Wakkerstroom; amendment (replacement of vehicle PP76306—BHF 297T). (3) One combi. (4) Replacement of vehicle. (5) To obtain the same authority as held by vehicle to be replaced.

OP528/A3499—NIGEL. (2) Redruth Transport Co. (Pty) Ltd, Nigel; bykomende voertuie. (3) Twee vragvoertuie. (4) Goedere. (5) Soos per bestaande magtiging.

OP535/A2858—GERMISTON. (2) Moser Industries (Pty) Ltd, Wadeville; additional vehicles with new authority. (3) Three goods vehicles. (4) Various machine parts belonging to mines, government departments, businesses which are grinded and chromed by the applicant. (5) Within a radius of 480 km from Germiston.

OP526/A3044—SPRINGS. (2) Pullens Engineering (Pty) Ltd, Springs; amendment (replacement of vehicle PP71825—BNM 857T). (3) One goods vehicle. (4) Replacement of vehicle. (5) To obtain the same authority as held by vehicle to be replaced.

OP530/A4700B—KRUGERSDORP. (2) Greyhound Bus Lines (Pty) Ltd, Krugersdorp/additional authority. (3) Four buses. (4) White, Asiatic and Coloured persons and their personal effects. (5) As per Annexure attached.

GREYHOUND BUS LINES (PTY) LTD

ROUTE 51

MULDERSDRIFT-WINDSOR-FERNDALE-JOHANNESBURG

Transport of White, Asiatic, Coloured passengers and their personal effects.

Route forward: Muldersdrift Hotel, Old Krugersdorp/Pretoria Road, Muldersdrift Road, D. F. Malan Drive, Alexander Avenue, Princess Avenue, Edward Street, Queens Avenue, Alexander Avenue, Earles Avenue, Alice Street, D. F. Malan Drive, Judges Avenue, Beatrice Street, Kings Avenue, George Street, Judges Avenue, South Road, First Avenue, Barry Hertzog Avenue, Empire Road, Jan Smuts Avenue, Ameshoff Street, Biccard Street, Smit Street, Harrison Street, Kerk Street, Loveday Street Terminus.

Return: Loveday Street, De Villiers Street, Harrison Street, De Korte Street, Ameshoff Street, then as forward route in reverse as far as Barry Hertzog, then. First Street, West Street, Judges Avenue, and then as forward route in reverse.

Restriction: On journeys to Johannesburg, no passengers to be picked up after leaving the junction of George Street and Judges Avenue. On the return, no passengers to be set down before the junction of George Street and Judges Avenue.

Alternative route during off-peak periods:

Forward: As per above route to Kings Avenue, then Republic Road, Rabie Street, Hester Road, Philip le Roux Avenue, Hans Schoeman Street, Hill Street, Kent Avenue, Harley Street, Selkirk, Jan Smuts Avenue, then as per existing route.

Return: As per existing route to Ameshoff Street, then as above alternative route in reverse.

Restriction: On journeys to Johannesburg no passengers to be picked up after leaving Philip le Roux Street (Malanshof). On journeys from Johannesburg no passengers to be set down before Philip le Roux Street (Malanshof.)

University of Fort Hare
Together in Excellence

Adults single fare:

Muldersdrift									
30	X Roads								
40	30	Sandspruit							
50	45	30	Honeydew Motel						
60	50	40	30	Caravan Park					
65	60	50	50	30	Windsor (any point)				
70	65	55	55	45	25	Fontainebleau or Malanshof			
70	65	55	55	50	45	35	Hill Str./Jan Smuts Ave.		
80	75	70	70	65	55	55	—	Empire way	
85	80	75	75	70	60	60	—	—	Braamfontein
90	85	80	75	75	65	65	—	—	— Johannesburg

Children's single fare:

Up to third birthday: Free of charge.
Up to 12th birthday: Half adult fare with fractions of a cent counting as one cent.
Rieldale scholar's journey: 10c.

University of Fort Hare
Together in Excellence

Time-table

		Monday to Friday														Saturday			
Muldersdrift Hotel	Dep.	—	06h15	—	—	—	—	—	—	—	—	—	—	—	—	06h45	—	—	—
Honeydew Hotel	Dep.	—	06h30	—	—	09h00	—	11h00	—	—	—	15h00	—	—	—	07h00	08h00	09h15	—
Windsor, Edward Street	Dep.	—	06h50	—	08h20	09h20	10h20	11h20	12h20	13h40	14h20	15h20	15h40	16h40	17h15	07h20	08h20	09h35	12h00
Windsor, Beatrice Street	Dep.	06h55	07h00	07h25	08h25	09h25	10h25	11h25	12h25	13h25	14h25	15h25	15h45	16h45	17h20	07h25	08h25	09h40	12h05
Malanshof	Dep.	—	—	—	08h45	09h45	10h45	11h45	12h45	13h45	14h45	15h45	—	—	—	—	08h45	10h00	12h25
Randburg, Hill Street	Dep.	—	—	—	08h50	09h50	10h50	11h50	12h50	13h50	14h50	15h50	—	—	—	—	08h50	10h05	12h30
Johannesburg, Loveday Street	Arr.	07h40	07h45	08h10	09h25	10h25	11h25	12h25	13h25	14h25	15h25	16h26	16h20	17h20	17:55	08h00	09h25	10h40	13h05
School, Beatrice Street	Dep.	06h55																	
Journey Rieldale	Arr.	07h15																	
Johannesburg, Loveday Street	Dep.	08h00	08h35	09h35	10h35	11h35	12h35	13h35	14h35	15h35	16h35	16h50	17h20	18h00		08h15	10h55	12h05	13h15
Randburg, Hill Street	Arr.	—	09h10	10h10	11h10	12h10	13h10	14h10	15h10	16h10	—	—	—	—		—	11h25	12h40	13h50
Malanshof	Arr.	—	09h15	10h15	11h15	12h15	13h15	14h15	15h15	16h15	—	—	—	—		—	11h30	12h45	13h55
Windsor, Beatrice street	Arr.	08h35	09h35	10h35	11h35	12h35	13h35	14h35	15h35	16h35	17h10	17h25	17h55	18h35		08h30	11h50	13h05	14h15
Windor, Edward Street	Arr.	08h40	09h40	10h40	11h40	12h40	13h40	14h40	15h40	16h40	17h16	17h30	18h00	18h40		08h35	11h55	13h10	14h20
Honeydew Hotel	Arr.	09h00	—	11h00	—	—	—	15h00	—	—	—	17h50	18h20	19h00		09h15	—	13h30	14h40
Muldersdrift Hotel	Arr.	—	—	—	—	—	—	—	—	—	—	18h05	18h35	19h15		—	—	13h45	14h55
School Rieldale	Dep.	13h45																	
Journey Beatrice Street	Arr.	14h05																	

Additional journeys, as and when required, with authority to operate between either termini and any intermediate point on route.

Special services

1 White, Asiatic, Coloured, passengers for religious, sport and educational purposes within a radius of 160 km from Randfontein G P.O with the proviso that the return journey is commencing within 24 hours after completion of the forward journey.

2. White, Asiatic, Coloured, passengers for religious, sport and educational purposes, within a radius of 160 km from Krugersdorp G.P O. with the proviso that the return journey is commenced within 24 hours after completion of the forward journey.

3 White, Asiatic, Coloured passengers for religious, sport and educational purposes within a radius of 160 km from Johannesburg G P.O with the proviso that the return journey is commenced within 24 hours after completion of the forward journey

4. White, Asiatic, Coloured passengers for religious, sport and educational purposes, within a radius of 160 km from Oberholzer G P.O with the proviso that the return journey is commenced within 24 hours after completion of the forward journey.

Conveyance under charter agreement.

Group of persons and their personal effects by means of a motor vehicle which has been chartered for a group of persons travelling together on organised tours commencing from points within the municipal areas of Johannesburg, Krugersdorp, Westonaria, Carletonville and Fochville to points of interest within the Republic of South Africa and return

The authority defined above, shall be subject to the following conditions:

1 Once the vehicle has been chartered for a specific tour, the holder of this motor carrier certificate shall not be allowed to sell vacant seats on the vehicle to any person on that tour.

2. Apart from the conveyance authorised in this motor carrier certificate, the holder thereof shall not make known generally whether by means of a notice published in a newspaper or in any other manner his intention to undertake a particular journey over any particular route.

3. All persons shall be returned to the point of commencement of the tour. This restriction shall not apply to a person conveyed on a journey from which forms part of a longer journey on which he will use another form of conveyance. The name of such person, and the point of his embarkation, shall be reflected in the manifest referred to in condition 4 hereunder:

(a) Name and address of motor carrier certificate holder. (b) Number of motor carrier certificate. (c) Registration number of vehicle. (d) Date of time of commencement and expected date of completion of journey. (e) Point between which journey is to be undertaken. (f) Name and address of charterer. (g) Signature of holder of motor carrier certificate or person authorised to sign on his behalf. (h) Carrying capacity of vehicle,

4. One copy of the manifest shall be carried by the driver of the vehicle and the original of such entry shall be posted within 24 hours after commencement of the journey to the Secretary for Transport, Private Bag X193, Pretoria. The office copy of the entry shall be kept by the holder and be available for inspection by an authorised officer.

5 If no persons are conveyed over a period of 30 days, or if conveyance of persons take place only within a radius of 160 km, a nil return must be submitted.

6. (a) Not more than one vehicle shall be used at any one time from any one area mentioned above

(b) The conditions contained herein shall be subject to review at any time.

OP538/A3611—REPUBLIC OF SOUTH AFRICA (2) Concor Roads (Pty) Ltd, Johannesburg; additional vehicle with new authority. (3) One goods vehicle DGV 850T belonging to Lindsay Saker Inter-Rent (Pty) Ltd. (4) Goods. (5) As per Annexure

(a) Own goods within an area with a radius of 80 km from any construction site where the holder is engaged under contract, and between such construction site and the nearest railway station. Provided that goods may only be conveyed under this authority if both the place where the goods are loaded and the final destination or nearest railway station, as the case may be, to which the goods have to be conveyed, are situated within the said area with a radius of 80 km from such a construction site. Within the Republic of South Africa

(b) Tools of trade, scaffolding, machinery and plant of which the holder is the sole owner and which is used by the holder or his employees in the course of his business:

(i) From the holder's place of business situated at Johannesburg direct to a construction site within the Republic of South Africa; or

(ii) from one such construction site direct to another such site; or

(iii) from such a construction site direct to the holder's said place of business

Subject to the explicit condition that no material which is normally required by the holder to execute any work or contract shall be conveyed by the holder in terms of this paragraph

(c) Own employees (free of charge) and camping equipment for use by such employees and not for sale between the holder's place of business situated at Johannesburg (and/or temporary residences situated within the Republic of South Africa at which such employees are being temporarily housed for the purposes and duration of any specific contract) and any place within the Republic of South Africa where they are to be or have been employed in the course of the holder's business, or from any one such place of employment situated within the latter area, to another such place of employment situated within the same area.

OP537/A3712—REPUBLIC OF SOUTH AFRICA (2) Concor Construction (Pty) Ltd, Johannesburg; new application. (3) Two goods vehicles belonging to Dan Perkins Works (City) (Pty) Ltd (4) Goods. (5) As per Annexure.

(a) Own goods within an area with a radius of 80 km from any construction site where the holder is engaged under contract, and between such construction site and the nearest railway station. Provided that goods may only be conveyed under this authority if both the place where the goods are loaded and the final destination or nearest railway station, as the case may be, to which the goods have to be conveyed, are situated within the said area with a radius of 80 km from such a construction site. Within the Republic of South Africa.

(b) Tools of trade, scaffolding, machinery and plant of which the holder is the sole owner and which is used by the holder or his employees in the course of his business:

(i) From the holder's place of business situated at Johannesburg direct to a construction site within the Republic of South Africa; or

(ii) from one such construction site direct to another such site; or

(iii) from such a construction site direct to the holder's said place of business:

Subject to the explicit condition that no material which is normally required by the holder to execute any work or contract shall be conveyed by the holder in terms of this paragraph.

(c) Own employees (free of charge) and camping equipment for use by such employees and not for sale between the holder's place of business situated at Johannesburg (and/or temporary residences situated within the Republic of South Africa at which such employees are being temporarily housed for the purposes and duration of any specific contract) and any place within the Republic of South Africa where they are to be or have been employed in the course of the holder's business, or from any one such place of employment situated within the latter area, to another such place of employment situated within the same area.

OP466/A3902—STANDERTON. (2) A. S. & C. M. Bhabha, trading as Brooklyn Bus Service, Standerton; amendment of routes and additional authority. (3) Twenty-two buses. (4) (a) Amendment of route: (Route 4a) Black, Asiatic and Coloured persons and their personal effects. (4) (b) Between Standerton Location and Hospital from Plama to Main road, Rooikoppies road, Madi Street, Marais Street, Taljaard Street, Lombard Street, turn off into Schwichard Street, Piet Retief Street and Hospital in Kruger Street, Caledon Street, Von Bakstrom Street, Paarl Street, Joubert Street, Piet Retief Street and return along existing route. (4) (b) Amendment of route: (Route 3b) Black, Asiatic and Coloured persons and their personal effects. (5) (b) Between Morgenzon and Standerton via Morgenzon 466, Protest 485, Uitkomst 489, Rietvley 488, Tweedronk 378, Weltevreden 381, Niekerksvley 380, Welbedacht 382, Hamelfontein 384, Verblyden 387 and Grootverlangen 409, subject to the proviso that on the forward journey from Morgenzon to Standerton no passengers may be picked up after passing the point situated 3,2 km on the Morgenzon side of the crossroads which are situated on Verblyden 44, and that on the return journey to Morgenzon no passengers may be set down before the aforementioned point. (4) (c) Additional routes: (i) Black, Asiatic and Coloured persons and their personal effects. (5) (c) Between Standerton Location and Hospital— from Plama to Main Road, Rooikoppies Road, Madi Street, Marais Street, Taljaard Street, Lombard Street, turnoff into Schwichard Street, Piet Retief Street and Hospital in Kruger Street, Caledon Street, to Bethal-Leandra Road, then Lombard Street, to join with existing Stanfield Hill route and then to follow this route or to return via Lombard Street, direct on existing route.

Time-table—Daily:

Depart Location: 06h00, 06h35, 13h00, 17h00, 19h00.
Additional trips as and when required

Tariff: Monthly R6,50, single 50c

(4) (c) (ii) Black, Asiatic and Coloured persons and their personal effects. (5) (c) Between Standerton Location and industrial sites via New Location Road, Marais Street, Landdrost Street, Steyn Street, Taljaard Street, Factory Street, Industrial Street, Van Veen Street, Mill Street, Factory Road, Produce Street, Van Veen Street, Marais Street, New Location Road

Time-table

Depart Location. 05h30, 06h00, 06h15, 06h45, 07h00, 12h45, 13h30, 14h00, 15h00, 15h30, 16h300, 16h30, 17h00, 17h30, 20h30, 21h30

Tariff: Single 15c, children under six years 10c, monthly R5,50

(4) (c) (iii) Black, Asiatic and Coloured persons and their personal effects. (5) (c) (iii) Between Standerton Location and Pretorius Vley 374, via Marais Street, Taljaard Street, Lombard Street, Grootverlangen 409, Verblyden 387, Riversdale 385, Hamelfontein 384, Welbedacht 382, Niekerks Vley 380, Pretorius Vley 374, return along same route

Time-table: As and when required.

Tariff: Single 45c.

OP525/A20766—BRAKPAN. (2) L. I. de Wet, Brakpan, additional vehicle. (3) Two dollies. (4) (a) Additional vehicles with part of existing authority: Water pumping plant, electrical lighting plant. (5) (a) From points within the Reef cartage area to points of installation within a radius of 240 km from Vereeniging Post Office. (4) (b) Indivisible abnormal loads measuring in excess of 13,7 metres in length or 3,05 metres in width or 2,86 metres in height provided that such load be accompanied by the relevant abnormal permits issued by the relevant Provincial Administration. (5) (b) Between points within a radius of 480 km from Brakpan Post Office.

OP527/A23—PRETORIA. (2) Suid-Afrikaanse Spoorweë en Hawens, Pretoria; wysiging van roete en wysiging van tydtafel. (3) Een leunwa en sleepwa. (4) Swart, Asiaat en Kleurling persone, bagasie, goedere en possakke. (5) Soos per bylaag aangeheg.

ERMELO-AMSTERDAM-PIET RETIEF: DIENS/SERVICE 8081

	Ma. Wo Vr. Mo We Fr. 1	km	Stopplekke Stopping places	Ma Wo Vr Mo We Fr. 2	
V/D	10h00	—	Ermelo (Sta.)	18h05	A
	S	2	Ermelo (Pk./P.O.)	S	
	—	3	Amsterdam (y)	—	
	S	16	Dwarspad	S	
	S	21	Pollaagte	S	
	S	26	Sandy's Glen	S	
	S	31	Joubertsfontein	S	
	10h45	39	Skimmelhoek	17h10	
	S	43	Steenkoolspruit	S	
	S	48	Stapelbergwinkel	S	
	S	53	Veldman	S	
	S	57	Stywe Lyne	S	
	S	61	Klipbult	S	
	S	64	Glen Eland	S	
	S	71	Athole	S	
A	11h30			16h20	V/D
V/D	11h50	80	Amsterdam	16h00	A
	S	85	Sterkman	S	
	S	90	Ngwempisibrug/Bridge	S	
	S	95	Vaalverdriet	S	
	S	96	Waterplaas	S	
	S	98	Natvlei	S	
	S	99	Evergreen	S	
	S	103	Cascades	S	
	S	107	Hlelo	S	
	S	111	Holdesheim	S	
	S	112	Amsina	S	
	S	119	Timber	S	
	–	128	Kerkstraat/Church Street (y)	–	
A	12h50	130	Piet Retief (Sta.)	15h00	V/D

OP529/A3713—KEMPTON PARK/JOHANNESBURG. (2) Auto Industrial (Pty) Ltd, Kempton Park/new application. (3) One bus. (4) Employees and their personal effects (free of charge) in the employ of the holder. (5) As per Annexure attached.

BETWEEN 107 FITTER ROAD, SPARTAN AND WANDERERS STREET, JOHANNESBURG

Bus route to be followed—Mornings:

Forward journey: Depart premises 107 Fitter Road, Spartan, at 05h30 via Chestnut Street, via Plane Road, via Isando Avenue, via Brabazon Road, via Driefontein Road, across bridge turn right into R24 (Jan Smuts), via Broadway Extension, via Kitchener Avenue, via Dan Avenue, via Bertram Road, via Charlton Terrace, via Saratoga Avenue, via Wolmarans Street, via Wanderers Street, arrive at Wanderers Street at 06h25.

Return journey: Mornings between Wanderers Street, Johannesburg and 107 Fitter Road, Spartan.

Depart Wanderers Street 06h30 via Wanderers Street, via Smit Street, via Saratoga Avenue, via Charlton Terrace, via Berea Road, via Viljoen Street, via Steward Drive, via Jolly Street, via Cavendish Road, via Regent Street, via Raymond Street, via De la Rey Street, via Observatory Road, via The Curve, via Observatory Road, via Woltemades Street, via Tainton Street, via Queens Street, via Broadway Extension, via R24 (Jan Smuts) via N3 (Germiston) via Linksfield Road, via First Avenue, via De Wet Street, via Andries Pretorius Road, via Central Avenue, via Palliser Road, via Erasmus Road, via Harris Avenue, via Shelton Avenue, via Minauch Road, via Sandvale Road, via Brabazon Road, via Isando Road, via Tungsten Road, via Sonnig Street, via Lente Street, via Kruin Street, via Tungsten Road, via Isando Road, via Plane Road, via Chestnut Street, arrive at premises 107 Fitter Road, Spartan 07h25.

Bus route evenings:

Forward journey: Between 107 Fitter Road, Spartan and Claim Street, Johannesburg. Depart premises, Fitter Road, Spartan 17h25, via Chestnus Street, via Plane Road, via Isando Road, via Tungsten Road, via Kruin Street, via Lente Street, via Sonnig Street, via Tungsten Road, via Isando Road, via Brabazon Road, via Sandvale Road, via Minauch Road, via Shelton Avenue, via Harris Avenue, via Erasmus Road, via Palliser Road, via Central Avenue, via Andries Pretorius Road, via De Wet Street, via First Avenue, via Linksfield Road via N3 (Germiston) via R24 (Johannesburg), via Broadway Extension, via Queens Street, via Tainton Street, via Woltemades Street, via Observatory Road, via The Curve, via Observatory Road, via De la Rey Street, via Muller Street, via Raymond Street, via Regent Street, via Cavendish Road, via Jolly Street, via Steward Drive, via Viljoen Street, via Gordon Road, via Bertram Road, via Charlton Terrace, via Saratoga Avenue, via Hudfield Road, via Tudhope Avenue, via Abel Road, via Catherine Avenue, via Kotze Street, via Claim Street, arrive 18h15.

Return journey: Between Claim Street, Johannesburg and 107 Fitter Road, Spartan. Depart Claim Street 18h20, via Mooi Street, via Market Street, via Commissioner Street in Kensington, via Roberts Avenue, via Langerman Drive, via Allum Street, via Broadway Extension, via R24 (Jan Smuts) via Brabazon Road, via Isando Road, via Chestnut Road arrive Fitter Road, Spartan 19h00.

Time-table

Mornings:

Forward journey:

Depart holder's place of business at 107 Fitter Road, Spartan at 05h30.

Arrive Wanderers Street, Johannesburg at 06h25.

Return journey:

Depart Wanderers Street, Johannesburg at 06h30.

Arrive holder's place of business at 107 Fitter Road, Spartan at 07h25.

Evenings:

Forward journey:

Depart holder's place of business at 107 Fitter Road, Spartan at 17h25.

Arrive Claim Street, Johannesburg at 18h15.

Return journey

Depart Claim Street, Johannesburg at 18h20.

Arrive holder's place of business at 107 Fitter Road, Spartan, Kempton Park at 19h00.

OT1009/H2592—JOHANNESBURG. (2) Harriet Buthelezi, Moroka; amendment of permit (replacement of vehicle and additional authority). (3) One motor-car. (4) Black taxi persons (increase to 8 persons). (5) (a) Between points within the Magisterial District of Johannesburg. (b) Casual trips outside area (a). (Car to be stationed at 151 Senaone.)

OT1010/H2512—JOHANNESBURG. (2) Lepeta Kleinbooi Lephoto, Moroka; amendment of permit (additional authority). (3) Two motor-cars. (4) Black taxi persons. (5) Between points within the municipal area of Johannesburg. (Car to be stationed at taxi rank, corner of Kort and Commissioner Streets, Johannesburg.)

OT1011/H11184—SOWETO. (2) Simon Kunene, kwaXuma; amendment of permit (replacement of vehicle and additional authority). (3) One motor-car. (4) From 5–8 Black taxi persons. (5) Between points within the boundaies of Soweto.

OT1012/H223—SOWETO. (2) Soloman Mkhondo, Meadowlands; amendment of permit (replacement of vehicle). (3) One motor-car. (4) Replacement of vehicle. (5) To obtain the same authority as vehicle to be replaced.

OT/1013—JOHANNESBURG. (2) Alpheus Buthelezi, Moroka; transfer from H. Buthelezi (H2592). (3) One motor-car. (4) Black taxi persons. (5) To obtain the same authority as held on Permit PP72657.

OT1014/H908—LANGVERWACHT. (2) July Mahlangu; Langverwacht; amendment of permit (replacement of vehicle). (3) One motor-car. (4) Replacement of vehicle. (5) To obtain the same authority as vehicle to be replaced.

OT1015/H2051—GERMISTON. (2) Sélomé Ekié Letsatsi, Katlehong; amendment of permit (replacement of vehicle and additional authority). (3) One motor-car. (4) From 5—8 Black taxi persons. (5) Between points within the municipal area of Germiston.

OT1016—ALBERTON. (2) Zolo Piet Mbele, Alberton; transfer from estate late G. E. Sibeko, H2893. (3) One motor-car. (4) Black taxi persons. (5) To obtain the same authority as held by transferor on Permit PP68728.

OT1018/H2791—GERMISTON. (2) Stanley Mathole Msimango, Katlehong; amendment of permit (replacement of vehicle and additional authority). (3) One motor-car. (4) Black, Asiatic and Coloured taxi persons. (5) (a) Between points within the Magisterial District of Germiston. (5) (b) Casual trips outside area (a).

OT1019/H1523—GERMISTON. (2) Francina Mofekeng, Katlehong; amendment of permit (additional authority). (3) One motor-car. (4) Black taxi persons (increase to 8 persons). (5) Between points within the Magisterial District of Germiston.

OT1020—SOWETO. (2) Alfred Hlongwane, Soweteo, New application. (3) One motor-car. (4) Eight Black taxi persons. (5) Between points within the boudaries of Soweto. (Car to be stationed at 1979 Jabulani.)

OT1021—ENNERDALE. (2) Hendrik Pieterson, Ennerdale; new application. (3) One motor-car. (4) Eight Coloured taxi persons. (5) Between points within a radius of 12½ km of Ennerdale as central point.

OT1022—ENNERDALE. (2) Kathleen Patronella Dames, Ennerdale; new application. (3) Two motor-cars. (4) Eight Coloured taxi persons. (5) Between points within a radius of 12½ km from Ennerdale.

OT1023—GRASSMERE. (2) Frank Thomas Geduld, Grassmere; new application. (3) One motor-car. (4) Eight Coloured taxi persons. (5) Between points within a radius of 12½ km from Ennerdale.

OT1024—ENNERDALE. (2) Leonard John Minnaar, Mid-Ennerdale; new application. (3) One motor-car. (4) Eight Coloured taxi persons. (5) Between points within a radius of 12½ km form Ennerdale.

OT1025—CARLETONVILLE. (2) Daniel Mogole, Carletonville; new application. (3) One motor-car. (4) Eight black taxi persons. (5) Between points within the Magisterial District of Oberholzer.

OT1026/H4071—KATLEHONG. (2) Daniel Mongwe, Katlehong; amendment of permit (replacement of vehicle and additional authority). (3) One motor-car. (4) Eight Black taxi persons (increase to 8 persons). (5) Between points with a radius of 6 km form Natalspruit Station. (Excluding any conveyance of persons within the municipal area of Alberton). (Car to be stationed at 290 Ncala Section, Katlehong.)

OT1027/H609—KRUGERSDORP. (2) Simon Phatlane, Kagiso; amendment of permit (replacement of vehicle). (3) One motor-car. (4) Replacement of vehicle. (5) To obtain the same authority as vehicle to be replaced.

OT1028/H2000—FLORIDA. (2) Johannes Markus Swart, Florida; transfer from O. U. R. Petrucci, H2444. (3) One motor-car. (4) Transfer of permit. (5) To obtain the same authority as held by transferor on Permit PP113048.

OT1029/H460—KATLEHONG. (2) Alfred Hlongwane, Katlehong, amendment of permit (replacement of vehicle). (3) One motor-car. (4) Replacement of vehicle. (5) To obtain the same authority as vehicle to be replaced.

OT1030/H447—JOHANNESBURG. (2) Martha Ngubeni, Meadowlands; amendment of permit (replacement of vehicle). (3) One motor-car. (4) Replacement of vehicle. (5) To obtain the same authority as vehicle to be replaced.

OT1031/H1042—JOHANNESBURG. (2) Aaron Gumbi, Dube; amendment of permit (replacement of vehicle) additional authority. (3) One motor-car. (4) From 5–8 tax persons. (5) (a) Between points within the Magisterial District of Johannesburg. (b) Casual trips outside area (a).

OT1032/H1125—KEMPTON PARK. (2) F. J. Prinsloo, Kempton Park; amendment of permit (replacement of vehicle). (3) One motor-car. (4) Replacement of vehicle. (5) To obtain the same authority as vehicle to be replaced.

OT1033/H2392—SOWETO. (2) Francina Mokgosi, kwaXuma; amendment of permit (replacement of vehicle). (3) One motor-car. (4) Replacement of vehicle. (5) To obtain the same authority as vehicle to be replaced.

OT1034/H891—ALBERTON. (2) Leonard Henry Kley, Eden Park; new application. (3) One motor-car. (4) Eight Black, Asiatic and Coloured taxi persons. (5) Between points within the municipal area of Alberton.

OT1035—JOHANNESBURG. (2) George Stergiopoulos, Johannesburg; new application. (3) One motor-car. (4) Five White taxi persons. (5) Between points within Johannesburg, Witwatersrand and Pretoria Areas.

OT1036/H2788—SPRINGS. (2) Isaac Masilela, kwaThema; amendment of permit (additional authority). (3) One motor-car. (4) Eight Black taxi persons. (5) Between points within a radius of 6 km of kwaThema.

OT1037/H1133—LESLIE. (2) N. Petros Simelane, Leslie; amendment of permit (amendment of route). (3) One motor-car. (4) Eight Black taxi persons. (5) Between points within a radius of 40 km of Post Office, Leslie, District of Highveld Ridge.

OT1038/H1133—LESLIE. (2) N. Petros Simelane, Leslie; amendment of permit (amendment of route). (3) One motor-car. (4) Black taxi persons. (5) Between points within a radius of 40 km of Post Office, Leslie, District of Highveld Ridge.

OT1039/H1879—KRUGERSDORP. (2) Sedney Marogange, Kagiso; (replacement of vehicle) additional authority. (3) One motor-car. (4) Replacement of vehicle. (5) (a) To obtain the same authoriy as vehicle to be replaced. (5) (b) Additional authority from 6–8 persons.

OT1040/H1754—SOWETO. (2) Joseph Malinga, kwaXuma; amendment of permit (replacement of vehicle and additional authority). (3) One motor-car. (4) Replacement of vehicle. (5) (a) To obtain the same authority as vehicle to be replaced. (5) (b) Additional authority (increase from 6–8 persons).

OT1041/H595—KRUGERSDORP. (2) Isaac Gumede, Kagiso II; amendment of permit (replacement of vehicle). (3) One motor-car. (4) Replacement of vehicle. (5) To obtain the same authority as vehicle to be replaced. (Additional authority: Increase from 6–8 persons).

OT1042/H861—VEREENIGING. (2) Daniel Yika, Sebokeng; amendment of permit (replacement of vehicle). (3) One motor-car. (4) Replacement of vehicle. (5) To obtain the same authority as vehicle to be replaced.

OT1043/H2961—SOWETO. (2) A. J. Makurube, kwaXuma; amendment of permit (replacement of vehicle and additional authority). (3) One motor-car. (4) Replacement of vehicle. (5) (a) To obtain the same authority as vehicle to be replaced. (5) (b) Additional authority (increase from 5–8 persons).

OT1044/H867—ALBERTON. (2) Mandlenkosi Alpheus Mazibuko, Alberton; additional vehicle. (3) One motor-car. (4) Eight Black taxi persons. (5) (a) Between points within the municipal area of Alberton. (5) (b) (Car to be stationed at 194 Khumalo Street, Alberton).

OT1045/H2728—SOWETO. (2) Joseph Masindeni, kwaXuma; amendment of permit (replacement of vehicle) additional authority. (3) One motor-car. (4) Black taxi persons (increase to 8 persons). (5) Between points within the boundaries of Soweto.

OT1046/H531—DIEPKLOOF. (2) Jeremiah Nyembe, Diepkloof; amendment of permit (replacement of vehicle) additional authority. (3) One motor-car. (4) Eight Black taxi persons. (5) Between points within a radius of eight km from Putco Bus Terminus at Steeldale. (Car to be stationed at George Goch Railway Station.) (Increase from 6 to 8 passengers).

OT1047/H1997—SOWETO. (2) Fisher Makhoba, Moroka; amendment of permit (replacement of vehicle) additional authority. (3) One motor-car. (4) Replacement of vehicle. (5) (a) To obtain the same authority as vehicle to be replaced. (5) (b) Additional authority (from 5 to 6 persons).

OT1048—WATTVILLE. (2) Solomon Makhuba, Wattville; transfer from M. Hoinif, H1219. (3) One motor-car. (4) Transfer of permit. (5) To obtain the same authority as held by transferor on Permit OP21621.

OT1049/H307—ALBERTON. (2) Velaphi Meshack Theledi, Thokoza; amendment of permit (replacement of vehicle). (3) One motor-car. (4) Replacement of vehicle. (5) To obtain the same authority as held by vehicle to be replaced.

OT1050/H3879—JOHANNESBURG. (2) Kenneth Hewitt Bassano, Hillbrow; amendment of permit (replacement of vehicle). (3) One motor-car. (4) Replacement of vehicle. (5) To obtain the same authority as vehicle to be replaced.

PRETORIA

Adres waarheen vertoë gerig moet word: Die Sekretaris, Plaaslike Padvervoerraad, Privaatsak X155, Pretoria, 0001.

Address to which representations must be submitted: The Secretary, Local Road Transportation Board, Private Bag X155, Pretoria, 0001.

Alle tydtafels en tarieflyste ter insae by Plaaslike Raad se kantore.

All time-tables and tariff lists for inspection at Local Board's offices.

M2081/A883—DISTRIK WITBANK. (2) Thikhi Rooney Maluka, Witbank; vervanging van voertuig TW 12462. (3) Een kombi (8 passasiers)—CNR 250T. (4) Nie meer as 8 Swart passasiers en hul persoonlike bagasie. (5) Op ritte binne: (a) Witbank Munisipale Gebied, (b) op toevallige ritte van plekke binne die munisipale gebied van Witbank na ander plekke binne die landdrosdistrik Witbank of van enige plek binne die landdrosdistrik Witbank na plekke binne die munisipale gebied van Witbank. Items (a) en (b) is onderworpe aan die 1 uur pro forma-beperking.

M4433/A882—DISTRIK CULLINAN. (2) Andries Mashigo, Mamelodi; vervanging van voertuie BCH 212T en BHS 653T. (3) Twee busse—CRR 262T (36/11) en DNL 076T (27/17). (4) Nie-Blanke passasiers en hul persoonlike bagasie. (5) Volgens bestaande goedgekeurde roetes, tydtafels, tariewe en beperkings.

M10427/A869—DISTRICT OF BARBERTON. (2) Simon Freddy Mnisi, Boschfontein; replacement of vehicle CbR 310T. (3) One combi (8 passengers)—DNW 504T. (4) Not more than 8 Black taxi passengers and their personal effects. (5) From Jeppes Reef 15 to Hectorspruit both situated within the Magisterial District of Barberton via Schoemansdal 13, Swedish Mission, Kaalrug 299, Laughing Waters 353, N'hlume 340, One Tree Hill 301, Mauricedale 295, Wilderness Ranch 270, Thankerton 268, Symington 253, all situated with the Magisterial District of Barberton and return to Jeppes Reef 15, District of Barberton with the same route as described above.

K1478/A870—DISTRICT OF PRETORIA. (2) Kawasaki World of Wheels (Pty) Ltd, Johannesburg; new application. (3) One bus (combi) (10 passengers)—DNG 243T. (4) Asiatic employees (free of charge) and their personal effects. (5) From Laudium, District of Pretoria to Marshall Street, Johannesburg and return. Route as follows: Leaving Laudium, Pretoria: 10th Avenue, Jewel Street, 13th Avenue, Tangerine Street, Ninth Avenue, Fourth Avenue, Sixth Avenue, out of Laudium to Johannesburg Road, via Kyalami M1, Harrow Road, Louis Botha Avenue, Klein Street, Wolmarans Street, Harrison Street, Marshall Street, Leaving Johannesburg: Marshall Street, Eloff Street, Anderson Street, Rissik Street, Joubert Street, Oxford Street, M1, turn to Kyalami Road, Laudium, Sixth Avenue, Fourth Avenue, Ninth Avenue, Tangerine Street, 13th Avenue, Jewel Street, 10th Avenue.

N1758/A865—DISTRIK LETABA. (2) Boy Willy Nyathi, Namakgale; vervanging van voertuig LEB 13-980. (3) Een kombi (8 passasiers)—LEB 13-115. (4) Nie meer as 8 Swart taxipassasiers en hul persoonlike bagasie. (5) (i) Vanaf Mica Poskantoor, geleë op die plaas Inyoku 159, distrik Letaba na plekke binne Naphuno 2, diesulke plekke geleë binne 'n gebied met 'n straal van 30 km vanaf Mica Poskantoor. (ii) Vanaf plekke binne Naphuno 2, diesulke plekke geleë binne 'n gebied met 'n straal van 30 km vanaf Mica Poskantoor geleë op die plaas Inyoku 159, distrik Letaba na genoemde Mica Poskantoor. (Die voertuig sal te Mica Poskantoor gestasioneer te word.)

M5847/A821—DISTRIK ODI I. (2) Ncete George Mnisi, Soshanguve; vervanging van voertuig CHD 664T. (3) Een kombi (8 passasiers)—DML 137T. (4) Nie meer as 8 Swart passasiers en hul persoonlike bagasie. (5) Tussen gebied 6 Ga-Rankuwa en H. F. Verwoerdhospitaal. (Voertuig gestasioneer te word te Gebied 6, Ga-Rankuwa.)

C1040/A840—DISTRIK ODI II. (2) Piet Chidi, Ga-Rankuwa; vervanging van voertuig YBB 4057. (3) Een kombi (8 passasiers)—YBB 575T. (4) Nie meer as 8 Swart taxipassasiers en hul persoonlike bagasie. (5) (i) Vanaf Makolokwe geleë op Leeuwkop 402, distrik Odi II na plekke binne 'n gebied met 'n straal van 15 km vanaf Makolokwe. (ii) Vanaf plekke binne 'n gebied met 'n straal van 15 km vanaf Makolokwe geleë op Leeuwkop 402, distrik Odi II na Makolokwe.

M10734/A835—DISTRICT OF PRETORIA. (2) Mohamed Ismail Bhamjee, Laudium; new application. (3) One combi (8 passengers)—DHB 710T and one motor-car (7 seater)—CKY 248T. (4) Not more than 8 Non-White passengers and their personal effects in respect of DHB 710T and not more than 7 Non-White passengers and their personal effects in respect of CKY 248T. (5) From Claudius, District of Pretoria to places within an area with a radius of 35 km from Claudius and return.

M1343/A833—DISTRICT OF WITRIVIER. (2) K[illegible] Philemon Masuku, Nsikazi; replacement of vehicle TDH 1912. (3) One bus (combi) (8 passengers)—DHH 449T. (4) Black organised groups for church, sport, recreational and educational purposes and their personal effects. (5) From places within an area with a radius of 10 km from Lundiland Township, Nsikazi Black Area, District of Witrivier to places within an area with a radius of 160 km from Lundiland Township, Nsikazi Black Area, district of Witrivier and return.

T1228/A842—DISTRICT OF WONDERBOOM. (2) Simon Tsela, Mamelodi, replacement of vehicle TP 128-784. (3) One combi (8 passengers)—BNK 100T. (4) Not more than 8 Black taxi passengers and their personal effects. (5) From Mamelodi Men's Hostel District of Wonderboom to Bapsfontein via The Willows, District of Pretoria and return.

T945/A848—DISTRIK CULLINAN. (2) Gabisane Boot Tshabangu, Kliphartsdrift; bestaande voertuig met gewysigde magtiging. (3) Een kombi (8 passasiers)—CTF 636T. (4) Nie meer as 8 Nie-Blanke taxipassasiers en hul persoonlike bagasie. (5) Vanaf Vlaklaagte 221 JR, distrik Cullinan na plekke binne 'n gebied met 'n straal van 75 km en terug. (Voertuig gestasioneer te word te Vlaklaagte 221 JR.)

Z232/A849—DISTRIK CULLINAN. (2) Msongelwa Amos Zimande, Weltevrede; bestaande voertuig met gewysigde magtiging. (3) Een motorkar (5 passasiers)—TCA 1246. (4) Nie meer as 5 Nie-Blanke taxipassasiers en hul persoonlike bagasie. (5) Vanaf Vlaklaagte 221 JR, distrik Cullinan na plekke binne 'n gebied met 'n straal van 75 km en terug. (Voertuig gestasioneer te word te Vlaklaagte 221 JR.)

M6081/A850—DISTRIK CULLINAN. (2) Khohliwe Hendrik Mthombeni, Kwaggafontein; bykomende voertuig met nuwe magtiging. (2) Een motorkar (6 passasiers)—TCA 10869. (4) Nie meer as 6 Nie-Blanke passasiers en hul persoonlike bagasie. (5) Vanaf Vlaklaagte 221 JR, distrik Cullinan na plekke binne 'n gebied met 'n straal van 75 km en terug. (Voertuig gestasioneer te word te Vlaklaagte 221 JR.)

M296/A867—DISTRICT OF PRETORIA. (2) Kelefilwe Gabriel Malatsi, Mamelodi; replacement of vehicle CMB 290T (3) One motor-car (5 passengers) DNV 445T. (4) Not more that 5 Non-White passengers and their personal effects. (5) (a) On trips within an area with a radius of 25 km from Church Square, Pretoria; (b) On casual trips from within the area described at (a) to any place beyond that area or from any place beyond that area to any place within that area (pro forma).

M9329/A876—DISTRIK PRETORIA. (2) Peter Moatshe, Mamelodi; vervanging van voertuig TP 34836. (3) Een motorkar (5 passasiers) DLC 815T. (4) Nie meer as 5 Nie-Blank taxipassasiers en hul persoonlike bagasie. (5) Vanaf Elarduspark, Pretoria, na plekke binne 'n gebied met 'n straal van 25 km en terug.

M60/A873—DISTRICT OF WONDERBOOM. (2) Lucas Moila, Mamelodi; an additional vehicle with new authority. (3) One combi (8 passengers) to be purchased. (4) Not more than 8 Black and Coloured taxi passengers and their personal effects. (5) Within an area with a radius of 10 km from Mamelodi West Charge Office and Mamelodi West Clinic (public) to places within Mamelodi. (Vehicle to be stationed at Mamelodi West Charge Office.)

M873/A872—DISTRICT OF ODI I. (2) Johannes Moketi, Saulsville; replacement of vehicle DFX 017T. (3) One combi (8 passengers) DNX 013T. (4) Not more than 8 Non-European passengers and their personal effects. (5) On trips between Uitvalgrond 584, Ga-Rankuwa Black Residential Area and places within Zambok Zyn Oudekraal 52, Magalies Black Residential Area and Non-European visitors from above-mentioned farms in Ga-Rankuwa to Pretoria General Hospital and the same passengers on the return journey to the starting places.

S2846/A852—DISTRIK CULLINAN. (2) Caliwe Johannes Suhole, Valschfontein; bestaande voertuig met gewysigde magtiging. (3) Een bestaande motorkar (5 passasiers) BNN 429T. (4) Nie meer as 5 Nie-Blanke passasiers en hul persoonlike bagasie. (5) Vanaf Vlaklaagte 221 JR, distrik Cullinan, na plekke binne 'n gebied met 'n straal van 75 km en terug. (Voertuig gestasioneer te word te Vlaklaagte 221 JR.)

S2775/A851—DISTRIK CULLINAN. (2) Abram Skosana, Weltevrede; bykomende voertuig met nuwe magtiging. (3) Een kombi (8 passasiers) TCA 4910. (4) Nie meer as 8 Nie-Blanke passasiers en hul persoonlike bagasie. (5) Vanaf Vlaklaagte 221 JR, distrik Cullinan, na plekke binne 'n gebied met 'n straal van 75 km en terug. (Voertuig gestasioneer te word te Vlaklaagte 221 JR.)

M7231/A853—DISTRIK CULLINAN. (2) Boyboy Samuel Mahlangu, Weltevrede; bestaande voertuig met gewysigde magtiging. (3) Een bestaande kombi (8 passasiers) CTF 898T. (4) Nie meer as 8 Nie Blanke passasiers en hul persoonlike bagasie. (5) Vanaf Vlaklaagte 221 JR, distrik Cullinan, na plekke binne 'n gebied met 'n straal van 75 km en terug. (Voertuig gestasioneer te word te Vlaklaagte 221 JR.)

M6591/A854—DISTRIK CULLINAN. (2) Lucas Mabuse Mahlangu, Weltevrede; bestaande voertuig met gewysigde magtiging. (3) Een bestaande kombi (8 passasiers) CTD 339T. Nie meer as 8 Nie-Blanke passasiers en hul persoonlike bagasie. (5) Vanaf Vlaklaagte 221 JR, distrik Cullinan, na plekke binne 'n gebied met 'n straal van 75 km en terug. (Voertuig gestasioneer te word te Vlaklaagte 221 JR.)

S2742/A847—DISTRIK CULLINAN. (2) Willie Mblazake Shabangu, Klipplaatdrift; bestaande voertuig met gewysigde magtiging. (3) Een bestaande motorkar (6 passasiers) TCA 7807. (4) Nie meer as 6 Nie-Blanke taxipassasiers en hul persoonlike bagasie. (5) Vanaf Vlaklaagte 221, distrik Cullinan, na plekke binne 'n gebied met 'n straal van 75 km en terug. (Voertuig gestasioneer te word te Vlaklaagte 221.)

M7349/A846—DISTRIK CULLINAN. (2) Josiah Santjie Masemula, Valschfontein, bestaande voertuig met gewysigde magtiging. (3) Een bestaande kombi (8 passasiers) CTF 699T. (4) Nie meer as 8 Nie-Blanke taxipassasiers en hul persoonlike bagasie. (5) Vanaf Vlaklaagte 221, distrik Cullinan, na plekke binne 'n gebied met 'n straal van 75 km en terug. (Voertuig gestasioneer te word te Vlaklaagte 221.)

B2368/A839—DISTRIK MORETELE 1. (2) Bophuthatswana Nasionale Ontwikkelings Korporasie, handeldrywende as Temba Groothandelaars Bpk., Temba; nuwe aansoek. (3) Vier vragmotors YBC 647 (7202 kg), YBC 651 (5380 kg), YBC 652 (6825 kg) en YBC 6668 (5440 kg). (4) Kruideniers- en handelsware. (5) Na plekke binne 'n gebied met 'n straal van 80 km vanaf Temba, distrik Moretele 1.

M10735/A834—DISTRICT OF PRETORIA. (2) Mrs Rookaya Bhamjee, Laudium, new application. (3) One motor-car (6 passengers) DBB 249T. (4) Not more than 6 Non-White taxi passengers and their personal effects. (5) From Claudius, District of Pretoria, to places within an area with a radius of 40 km from Claudius and return.

M334/A836—DISTRIK PRETORIA. (2) Lesani Andries Mokwena, Mamelodi; vervanging van voertuig TP 275-416. (3) Een motorkar (5 passasiers) CGN 286T. (4) Nie meer as 5 Swart taxipassasiers en hul persoonlike bagasie. (5) Tussen Denneboomstasie, distrik Pretoria, en Mamelodi Swart Woongebied, distrik Wonderboom.

M10216/A844—DISTRIK CULLINAN. (2) Njengane Amos Msiza, Boekenhouthoek; bestaande voertuig met gewysigde magtiging. (3) Een bestaande kombi (8 passasiers) LJL 250T. (4) Nie meer as 8 Nie-Blanke taxipassasiers en hul persoonlike bagasie. (5) Vanaf Vlaklaagte 221, distrik Cullinan, na plekke binne 'n gebied met 'n straal van 75 km. (Voertuig sal gestasioneer wees te Vlaklaagte 221.)

K1145/A825—DISTRIK PRETORIA. (2) Sutla Albert Komane, Saulsville; vervanging van voertuig TP 61218. (3) Een motorkar (5 passasiers) DNH 486T. (4) Nie meer as 5 Swart passasiers en hul persoonlike bagasie. (5) (i) Vanaf Atteridgevillespoorwegstasie na plekke geleë in Atteridgeville en Saulsville Swart Dorpe; (ii) vanaf plekke geleë in Atteridgeville en Saulsville Swart Dorpe na Atteridgevillespoorwegstasie.

P2322/A828—DISTRIK PRETORIA. (2) Robson Phoku, Soshanguve; vervanging van voertuig CHY 673T. (3) Een kombi (8 passasiers) DNK 770T. (4) Nie meer as 8 Swart taxipassasiers en hul persoonlike bagasie. (5) (i) Vanaf Hoekplaas 384, distrik Pretoria, na plekke binne 'n gebied met 'n straal van 10 km vanaf Hoekplaas 384, distrik Pretoria; (ii) vanaf plekke binne 'n gebied met 'n straal van 10 km vanaf Hoekplaas 384, distrik Pretoria, na Hoekplaas 384, distrik Pretoria, onderworpe aan die 1 uur pro forma-beperking.

M2634/A838—DISTRIK NEBO. (2) Petrus Mothupi, Malaita, vervanging van voertuig LEB 6-2425. (3) Een kombi (5 passasiers)—LEB 6-27.0. (4) Nie meer as 5 Swart passasiers en hul persoonlike bagasie. (5) (i) Vanaf Vleeschboom 869, distrik Nebo na plekke binne 'n gebied met 'n straal van 40 km vanaf Vleeschboom. (ii) Vanaf plekke binne 'n gebied met 'n straal van 40 km vanaf Vleeschboom 869, distrik Nebo na Vleeschboom 869, onderworpe aan die 1 uur pro forma-beperking.

E-9/A596—DISTRIK PRETORIA. (2) Isaiah Engelbrecht, Eersterus; bykomende voertuig met bestaande magtiging. (3) Een motorkar (5 passasiers)—TP 226-886. (4) Nie meer as 5 Nie-Blanke passasiers en hul persoonlike bagasie. (5) (i) Vanaf Waltloo Spoorwegstasie, distrik Pretoria na plekke binne 'n gebied met 'n straal van 12 km vanaf Waltloostasie. (ii) Vanaf plekke binne 'n gebied met 'n straal van 12 km vanaf Waltloospoorwegstasie, distrik Pretoria na Waltloostasie.

M10731/A826—DISTRICT OF SIBASA. (2) Marubini Sampson Mavhungu, Sibasa; transfer of Public Road Carrier Permit PP104626 from J. N. Muthige. (3) One combi (8 passengers)—VV 4927. (4) Not more than 8 Non-White taxi passengers and their personal effects. (5) (i) To Elim Hospital only. (ii) From places within an area with a radius of 35 km from Sibasa Post Office direct to Elim Hospital with same passengers on return journey, subject to the 1 hour pro forma restriction.

K1374/A818—DISTRIK NEBO. (2) Citha Piet Kabini, Buffelskloof, oordrag van Openbare Padvervoerpermit PP85-01 vanaf F. J. Ntuli. (3) Een kombi (8 passasiers) aangekoop te word. (4) Nie meer as 8 Swart huurmotorpassasiers en hul persoonlike bagasie. (5) (i) Vanaf Ngoalemong geleë op Buffelskloof 861, distrik Nebo na plekke binne 'n gebied met 'n straal van 30 km vanaf Ngoalemong. (ii) Vanaf plekke binne 'n gebied met 'n straal van 30 km vanaf Ngoalemong geleë op Buffelskloof 861, distrik Nebo na Ngoalemong.

M7490/A819—DISTRIK NEBO. (2) Joseph Mahlangu, Buffelskloof, oordrag van Openbare Padvervoerpermit PP85433 vanaf F. J. Ntuli. (3) Een kombi (8 passasiers)—LEB 6-1831. (4) Nie meer as 8 Swart huurmotorpassasiers en hul persoonlike bagasie. (5) (i) Vanaf Ngoalemong geleë op Buffelskloof 861, distrik Nebo na plekke binne 'n gebied met 'n straal van 30 km vanaf Ngoalemong. (ii) Vanaf plekke binne 'n gebied met 'n straal van 30 km vanaf Ngoalemong geleë op Buffelskloof 861, distrik Nebo na Ngoalemong.

S3439/A817—DISTRIK PRETORIA. (2) Piet Sindane, Mamelodi; vervanging van voertuig BJR 580T. (3) Een kombi (8 passasiers)—DLD 133T. (4) Nie meer as 8 Swart huurmotorpassasiers en hul persoonlike bagasie. (5) (i) Vanaf Wierda Parkwinkelsentrum, geleë op die hoek van Ruimteweg en Chris Houghardstraat, Verwoerdburg, distrik Pretoria na plekke geleë binne die munisipale gebied van Verwoerdburg. (ii) Vanaf plekke binne die municipale gebied van Verwoerdburg, distrik Pretoria, na Wierda Parkwinkelsentrum, geleë op die hoek van Ruimteweg en Chris Houghardstraat, Verwoerdburg, distrik Pretoria.

M1803/A822—DISTRICT OF PRETORIA. (2) Thomas Maake, Saulsville; replacement of vehicles TP 258-032, TP 168-231 and BGS 284T. (3) Three cars (5 passengers)—CSZ 137T, DND 904T and one to be purchased. (4) Not more than 5 Black taxi passengers in respect of CSZ 137T and the one to be purchased and Non-White passengers in respect of DND 904T.

(5) *In respect of CSZ 137 T:* Within an area with a radius of 10 km from Hercules Railway Station.

In respect of DND 904T: From Atteridgeville to Erasmia and passengers direct from Erasmia to Atteridgeville.

In respect of car to be purchased: (i) From Saulsville Railway Station to places within an area with a radius of 25 km from Saulsville Railway Station. (ii) From places within an area with a radius of 25 km from Saulsville Railway Station to Saulsville Railway Station.

K189/A829—DISTRIK PRETORIA. (2) Koos Kokela, Mamelodi; vervanging van voertuig TP 231-040. (3) Een kombi (8 passasiers)—CHV 362T. (4) Nie meer as 8 Swart huurmotorpassasiers en hul persoonlike bagasie. (5) (a) Op ritte binne 'n gebied met 'n straal van 25 km vanaf Kerkplein, Pretoria. (b) Op toevallige ritte van binne die gebied omskryf in (a) na enige plek buite daardie gebied of vanaf enige plek buite daardie gebied na enige plek binne daardie gebied—pro forma.

W421/A827—DISTRICT OF PRETORIA. (2) Rosaline Wilson, Eersterus; replacement of vehicle TP 168-961. (3) One combi (8 passengers)—CVR 012T. (4) Not more thatn 8 Non-White taxi passengers and their personal effects. (5) Within an area with a radius of 15 km from the Flying Saucer Road House Garage. (Vehicle to be stationed at the Flying Saucer Road House Garage.)

M10184/A894—DISTRICT OF PRETORIA. (2) Ezekiel Ngini Masukume, Mamelodi; replacement of vehicle BNP 752T. (2) One combi (8 passengers)—DNG 942T. (4) Not more than 8 Non-White taxi passengers and their personal effects. (5) On trips within an area with a radius of 25 km from Saulsville, district of Pretoria.

M9469/A899—DISTRIK PRETORIA. (2) April Mahlangu, Mamelodi; vervanging van voertuig TP 67209. (3) Een kombi (8 passasiers)—CPM 851T. (4) Nie meer as 8 Nie-Blanke huurmotorpassasiers en hul persoonlike bagasie. (5) Binne Eersterus Kleurlingwoonbuurt en tussen Eersterus en Chryslerfabriek, distrik Pretoria.

S3527/A896—RSA/SWAZILAND BORDER POSTS. (2) Swaziland Railway, Mbabane, new application. (3) One lorry (15 000 kg)—SD 486CH. (4) Locomotive and rail truck spares permanent way and general maintenance materials. (5) Between RSA/Swaziland Border Posts and places within the Pretoria/Reef Exempted Area and Breyten en route to and from Mbabane Swaziland.

S2855/A897—DISTRICT OF WONDERBOOM. (2) John Madimetsa Sema, Mamelodi; replacement of vehicle BBH 543T. (3) One combi (7 passengers)—DPC 748T. (4) Not more than 7 Black taxi passengers. (5) (i) From Mamelodi Old Age Home situated at Tsibane Street, Mamelodi West, District of Pretoria to places within an area with a radius of 5 km from Mamelodi Old Age Home. (ii) From places within an area with a radius of 5 km from Mamelodi Old Age Home to Mamelodi Old Age Home. (Vehicle to be stationed at Mamelodi Old Age Home.)

D738/A881—DISTRIK PRETORIA. (2) Johannes Dimpe, Atteridgeville, vervanging van voertuig CFZ 842T. (3) Een kombi (8 passasiers)—DCJ 154T. (4) Nie meer as 8 Swart huurmotorpassasiers en hul persoonlike bagasie. (5) (i) Vanaf Kalafongspoorwegstasie, distrik Pretoria, na plekke geleë binne Atteridgeville en Saulsville Swart Woongebiede. (ii) Vanaf plekke geleë binne Atteridgeville en Saulsville Swart Woongebiede na Kalafongspoorwegstasie, distrik Pretoria.

P256/A722—DISTRICT OF CULLINAN. (2) De Beers Consolidated Mines Ltd—Premier Mine Division, Cullinan; replacement of vehicle TAW 14158. (3) One bus (combi) (8 passengers)—DLR 158T. (4) White and Non-White visitors and own employees (free of charge) and their personal effects. (5) From place of business at Cullinan to Airports, railway stations and hotels situated within the Pretoria/Reef exempted area and return.

M7528/A859—DISTRIK MOKERONG 1. (2) Simon Thapedi Molomo, Abbotspoort; bykomende voertuig met bykomende magtiging. (3) Een kombi (8 passasiers)—LEB 3-324. (4) Nie meer as 8 Swart huurmotorpassasiers en hul persoonlike bagasie. (5) (i) Vanaf Abbotspoort 201, distrik Mokerong 1, na plekke geleë binne 'n gebied met 'n straal van 50 km vanaf Abbotspoort. (ii) Vanaf plekke geleë binne 'n gebied met 'n straal van 50 km vanaf Abbotspoort 201, distrik Mokerong 1, na Abbotspoort en vanaf plekke geleë in die voormelde gebied na Ellisras en terug vanaf Ellisras na plekke geleë in die voormelde gebied.

M7528/A888—DISTRIK MOKERONG 1. (2) Simon Thapedi Molomo, Abbotspoort; vervanging van voertuig LEB 3-1388. (3) Een kombi (8 passasiers)—LEB 3-394. (4) Nie meer as 8 Swart passasiers en hul persoonlike bagasie. (5) (i) Vanaf Abbotspoort 201, distrik Mokerong 1, na plekke binne 'n gebied met 'n straal van 30 km vanaf genoemde Abbotspoort. (ii) Vanaf plekke binne 'n gebied met 'n straal van 30 km vanaf Abbotspoort 201, distrik Mokerong 1, na Abbotspoort. Items (i) en (ii) is onderhewig aan die 1 uur pro forma-beperking. (Voertuig gestasioneer te word te Abbotspoort 201, distrik Mokerong 1.)

M2690/A862—DISTRIK ODI 1. (2) Alfred Mathabathe, Mamelodi; bykomende magtiging. (3) Twee bestaande motorkarre (5 passasiers)—BWW 789T en TP 249-897. (4) Nie meer as 5 Swart huurmotorpassasiers en hul persoonlike bagasie. (5) (i) Vanaf Winterveld 101, distrik Odi 1, na plekke geleë binne 'n gebied met 'n straal van 35 km vanaf Winterveld. (ii) Vanaf plekke binne 'n gebied met 'n straal van 35 km vanaf Winterveld 101, distrik Odi 1, na Winterveld.

N1690/A879—DISTRIK LETABA. (2) Magwaza Derik Nyathi, Namakgale; bykomende voertuig met nuwe magtiging. (3) Twee kombi's (8 passasiers) aangekoop te word. (4) Nie meer as 8 Swart huurmotorpassasiers en hul persoonlike bagasie. (5) (i) Vanaf Lulakane Lokasie geleë op Quagga 21, distrik Letaba na plekke binne 'n gebied met 'n straal van 15 km van Lulakane Lokasie. (ii) Vanaf plekke binne 'n gebied met 'n straal van 15 km vanaf Lulakane Lokasie geleë op die plaas Quagga 21, distrik Letaba na Lulakane Lokasie. (Voertuig gestasioneer te word te Lulakane Lokasie.)

S1986/A782—DISTRIK MIDDELBURG, TVL. (2) Job Skosana, Bethal; bykomende magtiging. (3) Agt bestaande busse. *Bykomende Roete 16:* (4) Swart passasiers en hul persoonlike bagasie. (5) Van Hendrina na Kriekragstasie op plaas Kriel 65 oor Grasfontein 199, Birmingham 197, Bloemfontein 196, Bosmanskraal 184, Driefontein 153, Aberdeen 152, Gloria 186, Geluk 26, Goedehoop 46, Haasfontein 28 (dan oor bestaande Roete 13 van Johannesburg permitte), Vaalkranz 29, Rietfontein 43, Welstand 55, Rietkuil 57, Roodebloem 48, Onverwacht 70 na Kriel 65 (Kriekragstasie), onderworpe aan die voorwaarde dat geen passasiers tussen Hendrina en Gloria 186 op- of afgelaai mag word nie.

Tydtafel

Maandae en Woensdae

Vertrek		*Aankoms*	
Hendrina	07h00	Kriekragstasie	08h30
Kriekragstasie	08h30	Hendrina	17h00

Bykomende ritte soos en wanneer benodig.

Tarief: R0,03 per passasier per km

M60/A875—DISTRIK WONDERBOOM. (2) Lucas Moila, Mamelodi, vervanging van voertuig CWT 196T. (3) Een kombi (8 passasiers)—DMW 592T. (4) Nie meer as 8 Swart huurmotorpassasiers en hul persoonlike bagasie. (5) Binne 'n gebied met 'n straal van 25 km vanaf Mamelodi Swart Woongebied, distrik Wonderboom, onderworpe aan die voorwaarde dat die voertuig gestasioneer te word te Mamelodi.

M60/A874—DISTRICT OF PRETORIA. (2) Lucas Moila, Mamelodi; an additional vehicle with new authority. (3) One combi (8 passengers) to be purchased. (4) Not more than 8 Black and Coloured taxi passengers (employees of City Council) and their personal effects. (5) Within an area with a radius of 10 km from Pretoria Kiosk, District of Pretoria, and return.

M10738/A845—DISTRIK CULLINAN. (2) George Mahlangu, Boekenhoutshoek; nuwe aansoek. (3) Een motorkar (6 passasiers)—TCA 2358. (4) Nie meer as 6 Swart huurmotorpassasiers en hul persoonlike bagasie. (5) Vanaf Vlaklaagte 221, distrik Cullinan, na plekke binne 'n gebied met 'n straal van 75 km en terug. (Voertuig gestasioneer te word te Vlaklaagte 221.)

M10736/A841—DISTRICT OF PRETORIA. (2) Isaac Monyamane, Saulsville; new application. (3) One motor-car (6 passengers) to be purchased. (4) Not more than 6 Black taxi passengers and their personal effects. (5) From Mphebatho Hotel, Atteridgeville, District of Pretoria to places within an area with a radius of 10 km from Mphebatho Hotel and return

N423/A858—DISTRIK MANKWE. (2) Molatlhela Rex Ntuane, Saulspoort; nuwe aansoek. (3) Een kombi (8 passasiers)—YBL 447. (4) Nie meer as 8 Swart huurmotorpassasiers en hul persoonlike bagasie. (5) (i) Vanaf Heystekrandspoorwegstasie geleë op Klipfontein 60, distrik Mankwe na plekke binne 'n gebied met 'n straal van 30 km vanaf Heystekrandspoorwegstasie. (ii) Vanaf plekke binne 'n gebied met 'n straal van 30 km vanaf Heystekrandspoorwegstasie geleë op Klipfontein 60, distrik Mankwe, na Heystekrandspoorwegstasie. (Voertuig gestasioneer te word te Heystekrandspoorwegstasie.)

N286/A781—DISTRIK WITRIVIER. (2) Matwalinkosi George Nyalunga, Mjekeza Samson Nyalunga, Fo Zacharia Nyalunga, Mhlonhlo Solomon Nyalunga, Gidumthimba Paul Nyalunga, Makukwane Ben Nyalunga, handeldrywend as Z S Nyalunga en Seuns Busdiens, Plaston; wysiging van tydtafel van Roete 17. (3) Nege-en-vyftig bestaande busse

Roete 17:

(4) Swart passasiers en hulle persoonlike bagasie. (5) Tussen Nyongani geleë op Lot 145, Nzikazi Trustgebied, distrik Witrivier en Witrivierdorp geleë op White River 64 via Shabelala Township, Chief Dingaans Kraal, De Rust 12, Lot 143, Bongani Hospitaal, Lot 142, Lot 149 (Mahashu), Lot 150, Lot 152, Lot 151, Salubindza Township, Lot 151, Lot 152, Lot 150, Lot 149, M'Timba 20, Lot 139, Masoyi, Lot 159, Lot 160, Manzani Township, Lot 162, Lot 135, Jerusalem Township, Lot 134, Lundi 34, Peebles 31, Loggies Farm 42, De Beersrust 53, The Fountains 58, White River 64, White River Town, Kruger Park Street, Busterminus

Tydtafel

Maandae tot Saterdae

Vertrek		*Aankoms*	
Nyongani	03h45	Witrivier	04h45
Nyongani	04h00	Witrivier	05h00
Nyongani	04h15	Witrivier	05h15
Nyongani	04h30	Witrivier	05h30
Nyongani	04h45	Witrivier	05h45
Nyongani	05h00	Witrivier	06h00
Nyongani	05h15	Witrivier	06h15
Nyongani	05h30	Witrivier	06h30
Nyongani	05h45	Witrivier	06h45
Nyongani	06h00	Witrivier	07h00
Nyongani	06h15	Witrivier	07h15
Nyongani	06h30	Witrivier	07h30
Nyongani	07h00	Witrivier	08h00
Nyongani	07h30	Witrivier	08h30
Nyongani	08h00	Witrivier	09h00
Nyongani	08h30	Witrivier	09h30
Nyongani	09h00	Witrivier	10h30
Nyongani	10h00	Witrivier	11h30
Nyongani	11h00	Witrivier	12h30
Nyongani	12h00	Witrivier	13h30
Nyongani	13h00	Witrivier	14h30
Witrivier	13h00	Nyongani	14h30
Witrivier	14h00	Nyongani	15h30
Witrivier	15h00	Nyongani	16h30
Witrivier	15h30	Nyongani	17h00
Witrivier	16h00	Nyongani	17h30
Witrivier	16h30	Nyongani	18h00
Witrivier	16h45	Nyongani	18h15
Witrivier	17h00	Nyongani	18h30
Witrivier	17h15	Nyongani	18h45
Witrivier	17h30	Nyongani	19h00
Witrivier	17h45	Nyongani	19h15
Witrivier	18h00	Nyongani	19h30
Witrivier	18h15	Nyongani	19h45
Witrivier	18h30	Nyongani	20h00
Witrivier	19h00	Nyongani	20h30
Witrivier	19h30	Nyongani	21h00

Plus addisionele ritte daagliks soos en wanneer benodig.

Sondae: Soos en wanneer benodig.

Tarief: R0,0258 per passasier per km.

M10732/A830—DISTRICT OF GROBLERSDAL. (2) Josiah Quitha Mahlangu, Vlaklaagte; new application. (3) One combi (8 passengers)—DDZ 647T. (4) Not more than 8 Black taxi passengers and their personal effects. (5) From Valschfontein situated on Valschfontein 33, District of Groblersdal, along the secondary road, past Walkraal situated on Walkraal 35, past Kwaggafontein situated on Kwaggafontein 196, past Gemsbokfontein situated on Gemsbokfontein 199, past Vlaklaagte situated on Vlaklaagte 221, past Gemsbokfontein situated on Gemsbokfontein 231, past Graslaagte situated on Graslaagte 232, past Leeufontein situated on Leeufontein 248, past Hartbeesspruit situated on Hartbeesspruit 434, past Taaifontein situated on Taaifontein 461, past Valsspruit situated on Valschspruit 458, past Modderfontein situated on Modderfontein 490, past Tweefontein situated on Tweefontein 491, past Roodepoort situated on Roodepoort 504, to Bronkhorstspruit and return. The vehicle is to be stationed in Valschfontein at the Commissioner's Office. (The vehicle is to be stationed in Bronkhorstspruit at the Bronkhorstspruit taxi rank.) This authority is subject to a 1 hour pro forma restriction.

M10733/A831—DISTRICT OF GROBLERSDAL. (2) Mbizana Samson Mthimunye, Valschfontein; new application. (3) One combi (8 passengers) to be purchased. (4) Not more than 8 Black taxi passengers and their personal effects. (5) From Valschfontein situated on Valschfontein 33, District of Groblersdal, along the secondary road, past Walkraal situated on Walkraal 35, past Kwaggafontein situated on Kwaggafontein 196, past Gemsbokfontein situated on Gemsbokfontein 199, past Vlaklaagte situated on Vlaklaagte 221, past Gemsbokfontein situated on Gemsbokfontein 231, past Graslaagte situated on Graslaagte 232, past Leeufontein situated on Leeufontein 248, past Hartbeesspruit situated on Hartbeesspruit 434, past Taaifontein situated on Taaifontein 461, past Valsspruit situated on Valschspruit 458, past Modderfontein situated on Modderfontein 490, past Tweefontein situated on Tweefontein 491, past Roodepoort situated on Roodepoort 504, to Bronkhorstspruit and return. The vehicle is to be stationed in Valschfontein at the Commissioner's Office. (The vehicle is to be stationed in Bronkhorstspruit at the Bronkhorstspruit taxi rank.) This authority is subject to a 1 hour pro forma restriction.

M9433/A866—DISTRIK PIETERSBURG. (2) Majana Ondernemings (Edms.) Bpk., Pietersburg/(i) vervanging van een bus—TAL 13405; (ii) bykomende magtiging ten opsigte van agt bestaande busse plus sewe bestaande sleepwaens; (iii) twee bykomende busse met bykomende magtiging. (3) *Bestaande busse:* TAL 10408 (77/19); TAL 17207 (12 passasiers); TAL 5060 (61/15); CMN 7321 (77/20); DDG 423T (59/11); CTZ 746T (77/22); CVH 754T (65/26); DNX 520T (77/23). *Bykomende busse:* CKD 018T (33 passasiers); CGX 891 (77/26). *Bestaande sleepwaens:* TAL 21217 (567 kg); TAL 17704 (567 kg); CKD 030T (460 kg); CPY 520T (530 kg); DDG 412T (1 000 kg); CLP 733T (850 kg); DBY 648 (567 kg).

(4) (a) Ten opsigte van vervanging van bus—TAL 13425 (OP124036) deur bus—DNX 520T: Blanke skoliere en Blanke georganiseerde geselskappe en hul persoonlike bagasie volgens bestaande goedgekeurde magtiging.

(5) (a) Oor bestaande goedgekeurde roetes en binne bestaande goedgekeurde gebiede, onderworpe aan bestaande goedgekeurde tydtafels, tariewe en beperkings.

(4) (b) Bykomende magtiging ten opsigte van *busse:* CKD 018T; DDG 423T; CTZ 746T; CVH 754T; CGX 891T en DNX 520T: *sleepwaens:* DDG 412T; CLP 733T; CBY 648T: Georganiseerde Blankes en/of Swartes en/of Asiate en/of Kleurlinge in diens van die Suid-Afrikaanse Weermag en/of onder opleiding in die Suid-Afrikaanse Weermag en hul persoonlike bagasie vir sport-, opvoedkundige-, godsdienstig en/of enige ander bona-fide Weermag aktiwiteite.

(5) (b) Vanaf plekke geleë binne die distrikte Pietersburg, Potgietersrus, Soutpansberg, Messina, Waterberg, Thabazimbi, Warmbad en Letaba na plekke binne die Republiek van Suid-Afrika en terug, onderhewig aan die uitdruklike voorwaarde dat die vervoer van so 'n groep persone slegs onderneem mag word indien dieselfde groep as 'n eenheid die heen- en terugreis onderneem met die uitsluitlike gemeenskaplike doel om een of meer van die volgende geleenthede by te woon:

(a) 'n Troue; (b) begrafnis; (c) godsdienstige byeenkoms; (d) 'n sportbyeenkoms, hetsy as 'n deelnemer of as 'n toeskouer; (e) 'n piekniek of enige ander soortgelyke vorm van georganiseerde vermaak of ontspanning; (f) en/of enige ander bona fide Weermag aktiwiteit soos deur die Weermag gereël.

(4) (c) Bykomende magtiging ten opsigte van *busse:* CKD 018T, DDG 423T; CTZ 746T; CVH 754T; CGX 891T en DNX 520T: *sleepwaens:* DDG 412T; CLP 433T; DBY 648T: Blanke bona fide student aan Universiteite en Kolleges en skoliere asook voldoende toesighoudende volwassenes en hul persoonlike bagasie.

(5) (c) Vanaf Johannesburg en Pretoria oor die volgende drie roetes na hul bestemming vir vakansie en naweekreise na plekke geleë in die distrik Pietersburg, Potgietersrus, Soutpansberg, Messina, Waterberg, Thabazimbi, Warmbad en Letaba en terug oor dieselfde roete:

Roete 1: Vanaf Johannesburg en Pretoria met die N1 roete tot op Pietersburg en vandaar na Maasstroom via Alldays;

Roete 2: Vanaf Johannesburg en Pretoria met die N1 Nasionale Pad na Pietersburg en vandaar na Louis Trichardt;

Roete 3: Vanaf Johannesburg en Pretoria met die N1 Nasionale Roete na Pietersburg en vandaar na Phalaborwa oor Tzaneen.

(4) (d) Bykomende magtiging ten opsigte van al die voertuie genoem in (3): Blankes en/of Swartes en/of Asiate en/of Kleurlinge in diens van die Suid-Afrikaanse Weermag en/of onder opleiding in die Suid-Afrikaanse Weermag en hul persoonlike bagasie.

(5) (d) Vanaf hul plek of basis van opleiding geleë in die distrikte Pietersburg, Potgietersrus, Soutpansberg, Messina, Waterberg, Thabazimbi, Warmbad en Letaba na hul bestemming binne die Republiek van Suid-Afrika vir vakansie- en/of naweekreise en/of na beëindiging van hul opleiding en waar van toepassing terug oor dieselfde roete.

(4) (e) Bykomende magtiging ten opsigte van al die voertuie genoem in (3):

Blanke skool- en koshuisgangers asook voldoende toesighoudende volwassenes en hul persoonlike bagasie vanaf Pretoria:

(5) (e) (i) Oor Kempton Park en plekke in die Oos-Rand met eindbestemming Springs en terug oor dieselfde roete;

(ii) Na Krugersdorp en terug oor dieselfde roete, onderhewig aan die uitdruklike voorwaarde dat geen passasiers op Pretoria opgelaai sal word nie en dat dit slegs die deur-vervoer van passasiers wat vanaf plekke geleë binne die landdrosdistrikte Pietersburg, Potgietersrus, Soutpansberg, Messina, Waterberg, Thabazimbi, Warmbad en Letaba sal behels.

H566/A561—DISTRIK MALAMULELE. (2) John Hlongwane, Blinkwater; omruilbaarheid van voertuie, wysiging van tydtafels van Roetes 1, 3 en nuwe Roete 9 (ou Roete 4, Bylae C) en wysiging van tariewe van 1,55c, 2c en 2,50c per passasier per km na eenvormige tarief van R0,025 per passasier per km. (3) Nege bestaande busse—GY 1520 (67 passasiers), GY 931 (54 passasiers), GY 318 (64 passasiers), GY 227 (54 passasiers); GY 213 (64 passasiers), GY 1347 (67 passasiers), GY 1307 (60 passasiers), GY 1064 (64 passasiers) en GY 1089 (64 passasiers). (4) (a) *Roete 1:* Swart passasiers en hul persoonlike bagasie. (5) (a) Tussen Stat J (Ntlhaveni) en Malamulele via State I, H, D, A, C, G, B, F en E, Kluster, Ziswita, Green, Phungwani, Lith, Boltman, Shingwedzi en Jerome.

Tydtafel

Daagliks

	Aankoms	*Vertrek*
Ntlhaveni 2 MU Stat J	—	04h00
Ntlhaveni 2 MU Stat I	04h10	04h15
Ntlhaveni 2 MU Stat H	04h25	04h30
Ntlhaveni 2 MU Stat D	04h40	04h45
Ntlhaveni 2 MU Stat A	04h55	05h00
Ntlhaveni 2 MU Stat C	05h10	05h15
Ntlhaveni 2 MU Stat G	05h20	05h25
Ntlhaveni 2 MU Stat B	05h30	05h35
Ntlhaveni 2 MU Stat F	05h40	05h45
Ntlhaveni 2 MU Stat E	05h55	06h00
Kluster 29 MT—Xiswita	06h20	06h25
Green 290 MT—Phungwani	06h35	06h40
Boltman 211 LT—Shingwedzi	06h50	06h55
Jerome 287 MT—Malamulele	07h00	—
Ntlhaveni 2 MU Stat J	18h15	—
Ntlhaveni 2 MU Stat I	18h00	18h05
Ntlhaveni 2 MU Stat H	17h45	17h50
Ntlhaveni 2 MU Stat D	17h30	17h35
Ntlhaveni 2 MU Stat A	17h15	17h20
Ntlhaveni 2 MU Stat C	17h00	17h05
Ntlhaveni 2 MU Stat G	16h45	16h50
Ntlhaveni 2 MU Stat B	16h30	16h35
Ntlhaveni 2 MU Stat F	16h15	16h20
Ntlhaveni 2 MU Stat E	16h00	16h05
Kluster 29 MT—Xiswita	15h35	15h40
Green 290 MT—Phungwani	15h20	15h25
Boltman 211 LT—Shingwedzi	15h05	15h10
Jerome 287 MT—Malamulele	—	15h00
Ntlhaveni 2 MU Stat J		—
Ntlhaveni 2 MU Stat I	17h25	—
Ntlhaveni 2 MU Stat H	17h10	17h15
Ntlhaveni 2 MU Stat D	16h55	17h00
Ntlhaveni 2 MU Stat A	16h40	16h45
Ntlhaveni 2 MU Stat C	16h25	16h30
Ntlhaveni 2 MU Stat G	16h00	16h05
Ntlhaveni 2 MU Stat B	15h45	15h50
Ntlhaveni 2 MU Stat F	15h30	15h35
Ntlhaveni 2 MU Stat E	15h15	15h20
Kluster 29 MT—Xiswita	15h00	15h05
Green 290 MT—Phungwani	15h35	15h40
Boltman 211 LT—Shingwedzi	14h20	14h25
Jerome 287 MT—Malamulele	—	14h10
Ntlhaveni 2 MU Stat J	15h00	—
Ntlhaveni 2 MU Stat I	15h15	15h10
Ntlhaveni 2 MU Stat H	15h30	15h25
Ntlhaveni 2 MU Stat D	15h55	15h50
Ntlhaveni 2 MU Stat A	16h10	16h05
Ntlhaveni 2 MU Stat C	16h25	16h20
Ntlhaveni 2 MU Stat G	16h55	16h50
Ntlhaveni 2 MU Stat B	17h10	17h05
Ntlhaveni 2 MU Stat F	17h35	17h30
Ntlhaveni 2 MU Stat E	17h50	17h45
Kluster 29 MT—Xiswita	18h05	18h00
Green 290 MT—Phungwani	18h20	18h15
Boltman 211 LT—Shingwedzi	—	18h30
Jerome 287—MT Malamulele	—	—

Tarief: R0,025 per passasier per km.

(4) (b) *Roete 2:* Swart passasiers en hul persoonlike bagasie. (5) (b) Tussen Stat J (Ntlhaveni) en Malamulele via State I, H, G, C, B en E, Kluster, Xiswita, Green, Phungwani, Lith, Boltman en Shingwedzi.

Tydtafel

	Aankoms	*Vertrek*
Ntlhaveni 2 MU Stat J	—	07h50
Ntlhaveni 2 MU Stat I	08h00	08h05
Ntlhaveni 2 MU Stat H	08h15	08h20
Ntlhaveni 2 MU Stat G	08h30	08h35
Ntlhaveni 2 MU Stat C	08h45	08h50
Ntlhaveni 2 MU Stat B	09h00	09h05
Ntlhaveni 2 MU Stat E	09h20	09h25
Xiswita	09h45	09h50
Phungwani	10h00	10h05
Shingwedzi	10h15	10h20
Malamulele	10h25	—

en soos en wanneer benodig.

Tarief. R0,025 per passasier per km.

(4) (c) *Roete 3:* Swart passasiers en hul persoonlike bagasie. (5) (c) Tussen Jerome 287 en Giyani via Shingwedzi, Malamulele, Boltman, Shingwedzi, Ireland, Dinga, Natorp, onopgemete grond (Giyanigebied), Louis Mine, Xikukwani en Nkhensanihospitaal.

Tydtafel

Daagliks

	Aankoms	*Vertrek*
Jerome 287 MT—Malamulele	—	07h00
Boltman 211 LT—Shingwedzi	07h05	07h10
Ireland 210 LT—Dinga	07h20	07h25
Natorp 227 LT—Mphambo	08h45	08h50
(onopgemete grond)—Louis Moore Mine	09h05	09h10
Giyanigebied—Xikukwani	09h15	09h20
—Nkhensanihospitaal	09h35	09h40
—Giyani		—

	Aankoms	Vertrek
Jerome 287 MT/Malamulele	14h40	—
Boltman 211 LT—Shingwedzi	14h30	14h35
Ireland 210 LT—Dinga	14h15	14h20
Natorp 227 LT—Mphambo	14h00	14h05
(onopgemete grond)—Louis Moore Mine	13h40	13h45
Giyanigebied— Xikukwani	13h30	13h35
—Nkhensanihospitaal	13h10	13h15
—Giyani	—	13h00
Jerome 287 MT—Malamulele	07h40	—
Boltman 211 LT—Shingwedzi	07h30	07h35
Ireland 210 LT—Dinga	07h15	07h20
Natorp 227 LT—Mphambo	07h00	07h05
(onopgemete grond)—Louis Moore Mine	06h40	06h45
Giyanigebied—Xikukwani	06h30	06h35
—Nkhensanihospitaal	06h10	06h15
—Giyani	—	06h00

Tarief: R0,025 per passasier per km.

(4) (d) *Roete 4:* Swart passasiers en hul persoonlike bagasie. (5) (d) Tussen Stat H (Ntihaveni) en Mhingastamkantoor via Stats I en J, Maphophe en Joseph.

Tydtafel

	Aankoms	Vertrek
Ntihaveni 2 MU—Stat H	—	06h00
Ntihaveni 2 MU—Stat I	06h10	06h15
Ntihaveni 2 MU—Stat J	06h25	06h30
—Maphophe	06h40	06h45
—Joseph	07h00	07h05
—Mhinga (Stamkantoor)	07h15	07h20
—Maphophe	07h30	07h35
Ntihaveni 2 MU—Stat J	07h45	—
Ntihaveni 2 MU—Stat H	—	—
Ntihaveni 2 MU—Stat I	—	—
Ntihaveni 2 MU—Stat J	—	17h30
—Maphophe	17h40	17h45
—Mhinga	18h05	—
Ntihaveni 2 MU—Stat H	19h15	—
Ntihaveni 2 MU—Stat I	19h05	19h10
Ntihaveni 2 MU—Stat J	18h50	18h55
—Maphophe	18h35	18h40
—Mhinga	18h20	18h25

Tarief: R0,025 per passasier per km.

Roete 5: (4) (e) Swart passasiers en hul persoonlike bagasie. (5) (e) Vanaf Blok J (Ntihaveni) na Giyani via Blokke I, D, A, C en G, Kluster, Albasini, Green Farm, Boltmen, Natrop, Shigamane, Muswane, Louis Moore en terug oor dieselfde roete.

Tydtafel

Daagliks

Vertrek		Arriveer	
Ntihaveni	06h00	Malamulele	09h00
Malamulele	09h30	Giyani	11h20
Giyani	15h00	Malamulele	16h40
Malamulele	18h30	Ntihaveni	21h00

Tarief: R0,025 per passasier per km.

Roete 6: (4) (f) Swart passasiers en hul persoonlike bagasie.(5) (f) (i) Vanaf Elimhospitaal, distrik Soutpansberg, na Giyani via Waterval 45, Moddervlei 44, Rossbech 83, Rivierplaats 87, Machappe 83, Zeekoeigat 79, Middelfontein 78, Driefontein 77, Thorndale 73, Malmesbury 72, Piesangfontein 71, Ossenhoek 70, Helderwater 95, Zonnebloem 105, Grootfontein 104, Blinkwater 67, Sterkrivier 97, Caledon 62, Crystalfontein 57, Sundani, Thabaansloksie, Makhuba, Mafuwe, Nkuri, Siyandane, Nkhensani.

(5) (f) (ii) Vanaf Giyani na Elimhospitaal, distrik Soutpansberg, via Nkhensani, Siyandane, Nkuri, Mafuwe, Makuba, Thabaansloksie Sundani, Crystalfontein 57, Caledon 62, Sterkrivier 97, Blinkwater 67, Grootfontein 104, Zonnebloem 105, Helderwater 95, Ossenhoek 70, Piesangfontein 71, Malmesbury 72, Thorndale 73, Driefontein 77, Middelfontein 78, Zeekoeigat 79, Machappe 83, Rivierplaat 87, Rossbech 83, Moddervlei 44, Waterval 45. Items (5) (f) (i) en (5) (f) (ii) is onderhewig aan die volgende beperkings: (a) Dat geen passasiers tussen Sundani en Makhuba op- of afgelaai word nie; (b) dat geen passasiers tussen Hoogmoed en Thabaansloksie op- of afgelaai mag word nie.

Tarief: R0,025 per passasier per km.

Tydtafel

Vertrek		Aankoms	
Elim	10h00	Giyani	13h00
Giyani	17h00	Elim	20h00

Roete 7: (4) (g) Swart passasiers en hul persoonlike bagasie. (5) (g) (i) Vanaf Xitlhakati, distrik Giyani na Giyani via Matsotsosela, Khazani, Zeba, Kphengani, Dzumeri, Thanganie, Phade, Sikhunyani, Ngove Nkhensanihospitaal, Giyani.

(5) (g) (ii) Vanaf Giyani na Xitlhkati, distrik Giyani, via Nkhensanihospitaal, Ngova, Sikhunyani, Phade, Thanganie, Dzumeri, Mphangani, Zava, Khazani, Matsotsosela.

Tarief: R0,025 per passasier per km.

Tydtafel

	Daagliks			
	Voormiddag		Namiddag	
	Aankoms	Vertrek	Aankoms	Vertrek
Xitlhakati	—	05h30	18h15	—
Matsotsosela	05h45	05h50	18h00	18h05
Khazani	06h00	06h05	17h45	17h50
Sava	06h15	06h20	17h30	17h35
Mphangani	06h30	06h35	17h15	17h20
Dzumeri	06h45	06h50	17h00	17h05
Thangani	07h00	07h05	16h45	16h50
Phade	07h15	07h20	16h30	16h35
Sikhunyani	07h30	07h35	16h15	16h20
Ngove	07h45	07h50	16h00	16h05
Nkhensanihospitaal	08h00	08h05	15h15	15h20
Giyani	08h15	—	—	—

Tarief: R0,025 per passasier per km.

Roete 8: (4) (h) Swart persone wat hulle self in 'n groep georganiseer het en hulle persoonlike bagasie. (5) (h) Vanaf plekke geleë binne 'n gebied met 'n straal van 10 km vanaf houer se bestaande roetes na plekke binne 'n gebied met 'n straal van 480 km vanaf Giyaniposkantoor en terug vanaf plekke geleë binne 'n gebied met 'n straal van 480 km vanaf Giyaniposkantoor na plekke geleë binne 'n gebied met 'n straal van 10 km vanaf houer se bestaande roetes, onderhewig aan die uitdruklike voorwaarde dat die vervoer van so 'n groep persone slegs onderneem mag word indien dieselfde groep as 'n eenheid die heen- en terugreis onderneem met die uitsluitlike gemeenskaplike doel om een of meer van die volgende geleenthede by te woon:

(i) 'n Troue; (ii) 'n begrafnis; (iii) 'n goedsdienstige byeenkoms; (iv) 'n sportbyeenkoms, hetsy as deelnemers of as toeskouers; (v) 'n pieknik of enige ander soortgelyke vorm van georganiseerde vermaak of ontspanning.

Roete 9: (4) (i) Swart passasiers en hul persoonlike bagasie. (5) (i) Tussen Giyani en Nthimkulu via Ngove, Chuma, Xikhumba, Sabulana, Makhuwa en terug oor dieselfde roete.

Tydtafel

Daagliks

Vertrek		Aankoms	
Mthimkulu	06h00	Giyani	09h30
Giyani	14h00	Mthimkulu	15h30

Tarief: R0,025 per passasier per km.

Roete 10: (4) (j) Black passengers and their personal effects. (5) (j) Between Soekmekaar (District of Soutpansberg) and Sterkrivier 97 (District of Giyani) via Zoekmekaar 778, Middagson 524, Sevenfontien 486/LS, Doornboom 168, Wakkerstroom 484, Rietvalei 130, Voorspoed 132, Goedverwacht 121, Goedehoop 120, Paardekraal 135, Bontfontein 136, Zoetfontein 137, Roerfontein 161, Zeekoefontein 157, Middelwater 156, Rotterdam 159, Middelwater 156, Zeekoefontein 157, Hartebeesfontein 139, Schaaplaagte 108, Olifantshoek 106, Schaaplaagte 108, Sonnebloem 105, Grootfontein 104, Blinkwater 67.

Time-table

Tuesdays and Thursdays

Depart		Arrive	
Sterkrivier	04h30	Soekmekaar	07h30
Zoekfontein	05h15	Zoetfontein	08h45
Soekmekaar	06h30	Sterkrivier	10h30
Sterkrivier	14h30	Soekmekaar	17h30
Zoetfontein	15h45	Zoetfontein	18h35
Soekmekaar	17h15	Sterkrivier	19h30

Saturdays

Sterkrivier	16h00	Soekmekaar	19h00
Zoetfontein	16h45	Zoetfontien	20h20
Soekmekaar	18h00	Sterkrivier	22h00

Tariff: R0,025 per passenger per km.

Roete 11: (4) (k) Black passengers and their personal effects. (5) (k) Between Soekmekaar (District of Soutpansberg) and Sterkrivier 97 (District of Giyani) via Zoekmekaar 778, Middagson 524, Zevenfontein 486-LS, Doornboom 168, Myngenoegen 166, Nooitgedacht 133, Mosterdhoek 163, Vaalwater 162, Roerfontein 161, Zeekoefontein 157, Middelwater 156, Rotterdam 159, Middelwater 156, Zeekoefontein 157, Hartebeesfontein 139, Schaaplaagte 108, Olifantshoek 106, Schaaplaagte 108, Zonnebloem 105, Grootfontein 104, Blinkwater 67.

Time-table

Mondays, Wednesdays and Fridays

Depart		Arrive	
Sterkrivier	04h30	Soekmekaar	08h30
Hartebeesfontein	05h15	Roerfontein	09h45
Roerfontein	05h30	Hartebeesfontein	10h05
Soekmekaar	06h45	Sterkrivier	11h30
Sterkrivier	14h30	Soekmekaar	15h45
Hartebeesfontein	15h10	Roerfontein	19h00
Roerfontein	15h45	Hartebeesfontein	19h15
Soekmekaar	17h10	Sterkrivier	19h45

University of Fort Hare
Together in Excellence

Sundays

Depart		*Arrive*	
Sterkrivier	04h30	Soekmekaar	07h30
Hartebeesfontein	05h15	Roerfontein	08h45
Roerfontein	05h30	Hartebeesfontein	09h05
Soekmekaar	06h45	Sterkrivier	10h30
Sterkrivier	14h30	Soekmekaar	17h45
Hartebeesfontein	15h10	Roerfontein	19h00
Roerfontein	15h45	Hartebeesfontein	19h15
Soekmekaar	17h10	Sterkrivier	19h45

Tariff: R0,025 per passenger per km.

S1986/A554—DISTRIK MIDDELBURG (TVL). (2) Job Skosana, Bethal Lokasie; wysiging van roetes, tydtafels en tariewe en bykomende roete. (3) Agt bestaande busse, besonderhede verskaf te word.

Roete 1

(4) (a) Nie-Blanke passasiers en hul persoonlike bagasie

(5) (a) Vanaf Hendrina na Hendrinakragstasie.

Via Beukesstraat, Grasfontein 199, Birmingham 197, Boschmanskraal 184, Driefontein 153, Boschmanskop 154, Pullenshoop 155 (Hendrinakragstasie) en terug oor dieselfde roete.

Tydtafel:

Maandae en Vrydae

Vertrek		*Aankoms*	
Hendrina	05h30	Hendrina Kragstasie	06h00
Hendrinakragstasie	07h30	Hendrina	08h00
Hendrina	08h30	Hendrinakragstasie	09h00
Hendrinakragstasie	15h30	Hendrina	16h00
Hendrina	16h30	Hendrinakragstasie	17h00
Hendrinakragstasie	18h00	Hendrina	18h30

Bykomende ritte 'n half-uur van die tye genoem in goedgekeurde tydtafel.

Tarief: R0,03 per passasier per km.

Roete 2

(4) (b) Nie-Blanke passasiers en hul persoonlike bagasie.

(5) (b) Vanaf Hendrina na Arnotkragstasie via Beukesstraat, Grasfontein 199, Bosmanslaagte 181, Bosmanspan 180, Vlakfontein 179, Boschmanspoort 159, Amsterdam 489JS, Arm 161, Schoonoord 164, Rietkuil 491 (Arnotkragstasie) en terug oor dieselfde roete.

Tydtafel

Maandae en Woensdae

Vertrek		*Aankoms*	
Hendrina	05h30	Arnotkragstasie	06h00
Arnotkragstasie	06h30	Hendrina	07h10
Hendrina	16h00	Arnotkragstasie	16h40
Arnotkragstasie	18h00	Hendrina	18h30

Vrydae

Hendrina	05h30	Arnotkragstasie	06h15
Arnotkragstasie	07h30	Hendrina	08h15
Hendrina	12h15	Arnotkragstasie	13h00
Arnotkragstasie	13h30	Hendrina	14h15
Hendrina	15h30	Arnotkragstasie	16h15
Arnotkragstasie	18h00	Hendrina	18h15

Saterdae

Hendrina	05h30	Arnotkragstasie	06h15
Arnotkragstasie	07h30	Hendrina	08h15
Hendrina	15h00	Arnotkragstasie	15h45
Arnotkragstasie	16h30	Hendrina	17h15

Bykomende ritte binne 'n half-uur van die tye genoem in goedgekeurde tydtafel.

Tarief: R0,03 per km per passasier.

Roete 3

(4) (c) Nie-Blanke persone wat huiself in 'n groep georganiseer het, en hulle persoonlike bagasie.

(5) (c) Vanaf Hendrina na plekke gelee binne 'n gebied met 'n straal van 250 km vanaf Poskantoor Hendrina en terug, onderhewig aan die volgende uitdruklike voorwaardes:

(a) Dat die terugreis binne 24 uur na tyd van aankoms by bestemming aanvaar word.

(b) Dat die vervoer van so 'n groep persone slegs onderneem mag word indien dieselfde groep as 'n eenheid die heen- en terugreis onderneem met die uitsluitlike gemeenskaplike doel om een of meer van die volgende geleenthede by te woon:

(i) 'n Troue; (ii) 'n begrafnis; (iii) 'n Godsdienstige byeenkoms; (iv) 'n sportbyeenkoms, hetsy as deelnemers of as toeskouers; (v) 'n piekniek of enige ander soortgelyke vorm van georganiseerde vermaak of ontspanning.

Roete 4

(4) (d) Nie-Blanke passasiers en hul persoonlike bagasie.

(5) (d) Vanaf Hendrina na Bethal via Grasfontein 199, Bloemhof 200, Vrishgewaagt 198, Graspan 22, Rietkuil 224, Kuilfontein 234, Vaalbank 233, Banklaagte 254, Vrede 257, Eerstegeluk 256, en Bethal Lokasie en terug oor dieselfde roete.

Tydtafel

Maandae en Woensdae

Vertrek		*Aankoms*	
Hendrina	08h30	Bethal	10h00
Bethal	14h00	Hendrina	15h30

Saterdae

Hendrina	08h30	Bethal	10h00
Bethal	13h15	Hendrina	14h45

Tarief: R0,03 per passasier per km.

Roete 5

(4) (e) Nie-Blanke passasiers en hul persoonlike bagasie.

(5) (e) Tussen Hendrina en Witbank via Beukesstraat (Hendrina-dorp), Grasfontein 199, Birmingham 197, Boschmanskraal 14, Driefontein 154, Boschmanskop 154, Pullenshoop 155 (Hendrinakragstasie), Roodepoort 151, Bothashoek 475, Noodhulp 474, Biesbokvlakte 24, Wolvenfontein, Welverdiend 23, Boschmanskrans 22, Driefontein 338 (Duvhakragstasie), Speekfontein 336, Naauwpoort 335, Klipfontein 322, Witbankdorp via Watermeyerstraat, Jellicolaan, terminus in Beathielaan en terug na Hendrina oor dieselfde roete.

Tydtafel

Maandae, Woensdae en Vrydae

Vertrek		*Aankoms*	
Hendrina	08h30	Witbank	10h30
Witbank	13h30	Hendrina	15h30

Tarief: R0,03 per passasier per km.

Roete 6

(4) (f) Swart passasiers en hul persoonlike bagasie.

(5) (f) Vanaf Hendrina oor Hendrinakragstasie na Middelburg Tvl., oor Birmingham 197, Boschmansfontein 182, Boschmanskraal 184, Driefontein 152, Boschmanskop 154, Pullenshoop 155 (Hendrinakragstasie) Roodepoort 151, Bothashoek 475, Noodhulp 474, Groot Rietpan, Woestalleen 477, Bliksem 461, Hamolfontein 462, Boschfontein 447, Ede 463, Erfdeel 446, Luipaardsfontein 444, Wanhoop 443, Rockdale 442, Middelburg Townlands: Onderhewig aan die voorwaarde:

(a) Dat op die rit vanaf Hendrina na Middelburg geen passasiers tussen Wanhoop 443 en Middelburg Tvl. opgelaai word nie.

(b) Dat op die rit vanaf Middelburg Tvl. na Hendrina geen passasiers tussen Middelburg Tvl. en Wanhoop 443 afgelaai word nie.

Tydtafel

Vertrek		*Aankoms*	
Hendrina	05h30	Hendrinakragstasie	06h15
Hendrinakragstasie	07h00	Middelburg	08h30
Middelburg	13h30	Hendrinakragstasie	15h00
Hendrinakragstasie	15h15	Hendrina	16h00

Tarief: R0,03 per passasier per km.

Roete 7

(4) (g) Nie-Blanke passasiers en hul persoonlike bagasie.

(5) (g) Vanaf Rietkuil 491 na Breyton via Pad D1484, Brakpan 163, Mooiplaas 165, Weltevreden 174, Vaalwater 173, Vaalbult 347, Kaudesbank 172, Witbank 209, Vaalbank 212 en terug via dieselfde roete.

Tydtafel

Dinsdae en Donderdae

Vertrek		*Aankoms*	
Rietkuil	08h00	Breyton	09h30
Breyton	14h00	Rietkuil	15h30

Tarief: R0,03 per passasier per km.

Roete 8

(4) (h) Swart passasiers en hulle persoonlike bagasie. (5) (h) Vanaf Hendrina na Vaalpan 68 (Krielkragstasie) oor Grasfontein 199, Birmingham 197, Bloemfontein 196, Bosmanskraal 184, Driefontein 153, Aberdeen 152, Gloria 136, Geluk 26, Broodsnyersplaas 25, Koringfontein 27, Haasfontein 28, Rietkuil 54, Roodebloem 58, Onverwacht 70, Driefontein 69, Nooitgedacht 59, en terug via dieselfde roete.

University of Fort Hare
Together in Excellence

Tydtafel

Maandae, Woensdae en Vrydae

Vertrek		*Aankoms*	
Hendrina	07h00	Krielkragstasie	08h30
Krielkragstasie	15h30	Hendrina	17h00

Bykomende ritte: Soos en wanneer benodig.

Tarief: R0,03 per passasier per km.

Roete 9

(4) (i) Nie-Blanke passasiers en hul persoonlike bagasie. (5) (i) Tussen Hendrina dorp en Hendrina Swart Woonbuurt. Afstand 2,0 km.

Tydtafel

Maandae, Vrydae en Saterdae

Vertrek		*Aankoms*	
Swartdorp	06h35	Hendrina	06h50
Hendrina	07h00	Swartdorp	07h15
Swartdorp	07h35	Hendrina	07h50
Hendrina	17h15	Swartdorp	17h30

Addisionele ritte soos en wanneer benodig.

Tarief: 10c per enkelrit.

Roete 10

(4) (j) Nie-Blanke passasiers en hul persoonlike bagasie. (5) (j) Vanaf Hendrina na Middelburg, Tvl, via Beukesstraat, Grasfontein 199, Vaalbank 177, Vlakfontein 179, Vlakfontein 176, Mooiplaats 165, Brakpan 163, Boschmanspoort 159, Amsterdam 489 JS, Arm 161, Schoonoord 164, Riethuil 491 (Arnotkragstasie), Tweefontein 458, Bosmansspruit 459, Kwaggafontein 460, Boschfontein 447, Ede 463, Luipaardsfontein 444, Wanhoop 443, Rockdale 442, Middelburg Town and Townland 287, Jan Vanriebeeckstraat, Meyerstraat en terug oor dieselfde roete: Onderworpe aan die volgende beperkings:

(a) Dat op die rit vanaf Hendrina na Middelburg geen passasiers tussen Wanhoop 443 en Middelburg opgelaai mag word nie en op die rit vanaf Middelburg na Hendrina geen passasiers tussen Middelburg en Wanhoop 443, afgelaai mag word nie;

(b) dat met die rit vanaf Hendrina na Middelburg geen passasiers wat te Arnotkragstasie opgelaai word afgelaai word op enige punt gelê binne die munisipale gebied van Middelburg; en

(c) dat met die rit vanaf Middelburg na Hendrina geen passasiers wat binne die munisipale gebied van Middelburg opgelaai word by Arnotkragstasie afgelaai word.

Tydtafel

Maandae en Donderdae

Vertrek		*Aankoms*	
Hendrina	08h00	Middelburg	10h00
Middelburg	14h30	Hendrina	16h30

Additionele ritte op Saterdae

Saterdae

Vertrek		*Aankoms*	
Hendrina	07h00	Middelburg	09h00
Middelburg	13h15	Hendrina	15h15

Tarief: 3c per km per passasier.

Roete 11

(4) (k) Nie-Blanke passasiers en hul persoonlike bagasie. (5) (k) Vanaf Hendrina na Middelburg via Beukesstraat or Grasfontein 199, Bloemhof 200, Kafferstad 195, Vlaklaagte 223, Brakpan 255, Welteevreden 193, Uitgezocht 194, Hartebeeskuil 185, Gloria 188, Geluk 26, Kroonfontein 27 (Komatikragstasie), Broodsnyersplaas 25, Roodepoort 151, Bothashoek 475, Noodhulp 474, Driehoek 472, Arendsfontein 464, Wanhoop 443, Rockdale 440, Middelburg Town and Townlands 287, Middelburg, Tvl.

(a) Dat geen direkte passasiers tussen Komatikragsentrale en Middelburg vervoer mag word nie;

(b) dat geen passasiers tussen Wanhoop en Middelburg vervoer mag word nie.

Tydtafel

Maandae en Vrydae

Vertrek		*Aankoms*	
Hendrina	08h30	Middelburg	10h15
Middelburg	14h30	Hendrina	16h15

Tarief: 3c per passasier per km.

Roete 12

(4) (l) Nie-Blanke passasiers en hul persoonlike bagasie. (5) (l) Vanaf Pullenshoop 155 (Hendrinakragstasie) na Bethal via Boschmanskop 154, Driefontein 152, Boschmanskraal 184, Uitgezocht 194, Dunbar 189, Halfgevonnen 190, Geluk 226, Scharvekop 227, Vlakkuilen 76, Legdaar 78, Yzervarkfontein 106, Mooifontein 108, in Bethal via Schlossberglaan, Stasiestraat, terminus en terug oor dieselfde roete.

Tydtafel

Woensdae

Vertrek		*Aankoms*	
Hendrinakragstasie	08h30	Bethal	10h00
Bethal	14h30	Hendrinakragstasie	16h00

Saterdae

Hendrinakragstasie	08h00	Bethal	09h30
Bethal	14h30	Hendrinakragstasie	16h00

Tarief: 3c per km per passasier.

Roete 13

(4) (m) Nie-Blanke passasiers en hulle persoonlike bagasie. (5) (m) Vanaf Pullenshoop 155 (Hendrinakragstasie) na Bethal via Boschmanskop 154, Driefontein 152, Boschmanskraal 184, Uitgezocht 194, Welteevreden 193, Dunbar 189, Halfgevonnen 190, Geluk 226, Scharvekop 227, Uitgedaght 229, Vlaklaagte 107, Mooifontein 108 dan via Schlossberglaan, Stasiestraatterminus en terug oor dieselfde roete.

Tydtafel

Dinsdae en Vrydae

Vertrek		*Aankoms*	
Hendrinakragstasie	08h30	Bethal	10h00
Bethal	14h30	Hendrinakragstasie	16h00

Addisionele ritte soos en wanneer benodig.

Tarief: 3c per passasier per km.

Roete 14

(4) (n) Swart passasiers en hul persoonlike bagasie. (5) (n) Vanaf Hendrina na Witbank oor Beukesstraat, Grasfontein 199, Birmingham 197, Bloemfontein 196, Boschmanskraal 184, Uitgezocht 194, Hartebeestkuil 185, Gloria 186, Driefontein 153, Aberdeen, Geluk 26, Broodsnyersplaats 25, Welverdiend 23, Blesbokvlakte 24, Boschmanskrans 22, Driefontein 338, Speekfontein 336, Nasuwpoort 335, Klipfontein 322, Joubertrust 310, en Witbankdorp dan oor Watermeyerstraat, Jellicoelaan na die terminus in Beathielaan en terug na Hendrina oor dieselfde roete, onderhewig aan die voorwaarde dat geen passasiers op en afgelaai mag word tussen Hendrina en Gloria 186, nie.

Tydtafel

Dinsdae en Donderdae

Vertrek		*Aankoms*	
Hendrina	08h30	Witbank	10h30
Witbank	13h30	Hendrina	16h00

Saterdae

Hendrina	08h15	Witbank	10h15
Witbank	13h00	Hendrina	15h30

Bykomende ritte soos en wanner benodig.

Tarief: 3c per passasier per km.

Roete 15 (bykomende roete)

(4) (o) Nie-Blanke passasiers en hul persoonlike bagasie. (5) (o) Tussen Hendrina en Bethal via Birmingham 197, Bloemfontein 196, Uitgezocht 194, Boschmanskraal 184, Gloria 186, Hartebeeskuil 185, Wilmansrust 47, Leeuwfontein 48, links met die hoofpad oor bestaande roete via Middelkraal 50, Vlakkuilen 76, Legdaar 78, Yzervarkfontein 106, Mooifontein 108, na Bethaldorp via Schlossberglaan, Stasiestraatterminus en terug oor dieselfde roete.

Tydtafel

Maandae en Vrydae

Vertrek		*Aankoms*	
Hendrina	08h30	Bethal	10h15
Bethal	14h30	Hendrina	16h15

Tarief: 3c per passasier per km.

PRETORIA

NASIONALE VERVOERKOMMISSIE PRETORIA
NATIONAL TRANSPORT COMMISSION PRETORIA

Adres waarheen vertoë gerig moet word: Die Sekretaris van Vervoer, Afdeling Padvervoer, Privaatsak X193, Pretoria, 0001.

Address to which representations must be submitted: The Secretary for Transport, Division of Road Transportation, Private Bag X193, Pretoria, 0001.

Skriftelike vertoë, in vyftienvoud, ter ondersteuning of bestryding van hierdie aansoeke moet binne tien (10) dae vanaf die datum van hierdie publikasie aan die aangeduide adres gerig word.

Written representations, in fifteenfold, supporting or opposing these applications must be submitted to the address indicated within ten (10) days from the date of this publication.

D18/6/1612 (A3/14)—CAPE TOWN. (2) Ivor Basil Garb, trading as Rent-A-Ride, Cape Town; application for public road carrier permit. (3) Two 10-seater combi mini-buses. (4) Tourists and their personal effects and organised parties and their personal effects. (5) From Cape Town to places situated within a radius of 600 km and back. They will conveyed to a variety of scenic and historical places within this radius.

University of Fort Hare
Together in Excellence

D18/6/1443 (A2/18)—JOHANNESBURG. (2) Educational Wildlife Expeditions, Bedfordview; amendment of permit (replacement of vehicle). (3) One 10-seater micro-bus—DMV 400T. (4) White tourists and White organised parties and their personal effects. (5) As per existing authority—existing authority to be seen at the Division of Transport, Room H452, Forum Buildings, Struben Street, Pretoria.

D18/6/1604 (A2/15)—JOHANNESBURG. (2) Fish Eagle Safaris (Pty) Ltd, Boksburg; application for public road carrier permit. (3) One 9-seater safari-bus—TB 11816. (4) White tourists and their personal effects. (5) From points within a radius of 60 km from GPO Boksburg to points within the RSA and return.

D18/6/833 (A1/6)—PRETORIA. (2) Penduka Safaris (Edms.) Bpk., Geysdorp; wysiging van permit (vervanging van voertuig). (3) Een 18-sitplekvoertuig. (4) Blanke toeriste en hulle persoonlike bagasie. (5) Oor bestaande roetes—bestaande magtiging ter insae by die Tak Padvervoer, Forumgebou, Kamer H452, Pretoria.

D18/6/1432 (A3/17)—CAPE TOWN. (2) Gerald John Albert Knight, trading as Town of Country Touring Services, Plumstead; amendment of vehicle (replacement of vehicle). (3) One 24-seater bus to be acquired. (4) White tourists and their personal effects. (5) As per existing authority—existing authority to be seen at the Division of Transport, Forum Buildings, Room H452, Pretoria.

D18/6/227 (A3/21)—CAPE TOWN. (2) Unique Coach Tours (Pty) Ltd, Rondebosch; amendment of permit (replacement of vehicle). (3) Een 26-sitplekbus en een 60-sitplekbus. (4) Tourists and organised parties and their personal effects. (5) Over existing routes—existing authority to be seen at the Division of Transport, Forum Buildings, Room H452, Pretoria.

(4) (b) White persons who have organised themselves into a party and their personal effects. (5) (b) From points within a radius of 80 km from Durban General Post Office to places situated within the R.S.A. and S.W.A. borders and back to places where the party was picked up in the first instance: Subject to the express condition that the conveyance of such a party may only be undertaken if the same party undertakes the forward and return journeys as a unit with the sole mutual purpose of attending one or more of the following:

(i) A wedding; (ii) a funeral; (iii) a religious gathering; (iv) a sport meeting, whether as participants or as spectators; (v) a picnic or any similar kind of organised entertainment or recreation.

The authority defined in paragraph A above shall be subject to the following conditions:

(i) Once the vehicle has been chartered for a specific tour the holder of this public road carrier permit shall not be allowed to sell vacant seats on the vehicle to any person for that tour.

(ii) Apart from the conveyance authorised in this public road carrier permit, the holder thereof shall not make known generally whether by means of a notice published in a newspaper or in any other manner his intention to undertake a particular journey over any particular route.

(iii) All persons shall be returned to the point of commencement of the tour. This restriction shall not apply to a person conveyed on a journey which forms part of a longer journey on which he will use another form of conveyance. The name of such person and the point of his embarkation shall be reflected in the manifest referred to in condition (iv) hereunder.

(iv) In respect of trips to points beyond a radius of 160 km from the General Post Office of Umhlanga Rocks a manifest shall be made out in triplicate, prior to the commencement of the journey, giving the following particulars:

(a) Name and address of public road carrier permit holder.
(b) Number of public road carrier permit.
(c) Registration number of vehicle.
(d) Date and time of commencement and expected date of completion of journey.
(e) Points between which journey is to be undertaken.
(f) Name and address of charterer and names of passengers.
(g) Signature of holder of public road carrier permit or person authorised to sign on his behalf.
(h) Carrying capacity of vehicle.

One copy of the manifest shall be carried by the driver of the vehicle and the original of such entry shall be posted within 24 hours after commencement of the journey to the Secretary for Transport, Div. Road Transportation, Private Bag X193, Pretoria, 0001. The office copy of the entry shall be kept by the holder and held available for inspection by an authorised officer.

(v) If no persons were conveyed over a period of 30 days or if conveyance of persons took place only within a radius of 160 km a nil-return for that period must be submitted.

The conditions contained herein shall be subject to review at any time.

D18/6/1511 (A5/5)—DURBAN (re-advertised). (2) Natal Interschool Services (Pty) Ltd, Pinetown; amendment of permit (additional authority). (3) One 77-seater vehicle, two 90-seater vehicles, two 60-seater vehicles, one 100-seater vehicle, one 41-seater vehicle and one 14-seater vehicle. (4) (a) Tourists and their personal effects. (5) (a) From points within a radius of 80 km from Durban General Post Office to points within the RSA and return.

The conveyance authorised above, shall be subject to the following conditions:

(i) No additional persons shall be picked up at any point other than the starting point of the area as prescribed above and no persons shall set down en route except as provided for in condition (ii) below.

(ii) All persons shall be conveyed back to the point of embarkation except in case of a person who wishes to discontinue a tour at any place en route in order to proceed further on a tour to a place be beyond the borders of the Republic of South Africa and the borders of South-West Africa. The name of such person and the point of his disembarkation shall be reflected in the manifest referred to in condition (iii) hereunder.

(iii) A manifest shall be made out in triplicate prior to the commencement of the journey showing the following particulars:

(a) Name and address of public road carrier permit holder.
(b) Number of public road carrier permit.
(c) Registration number of vehicle.
(d) A list of the names of passengers.
(e) Description of route.
(f) Date and time of commencement and expected date of completion of journey.
(g) Signature of holder of public road carrier permit or a person authorised to sign on his behalf.
(h) Carrying capacity of vehicle.

The copy of the manifest shall be carried by the driver of the vehicle during the journey and the holder of the relative public road carrier permit shall post the original of the manifest to the Director-General Transport, Div. Transportation, Private Bag X193, Pretoria, 0001. Within 24 hours after commencement of the journey.

The office copy of the entry shall be kept by the holder and held available for inspection by an authorised officer.

(iv) If no persons were conveyed over a period of 30 days a nil-return for that period must be submitted.

The conditions contained herein shall be subject to review at any time.

PORT ELIZABETH

Adres waarheen vertoë gerig moet word: Die Sekretaris, Plaaslike Padvervoerraad, Privaatsak X3909, Port Elizabeth, 6056.

Address to which representations must be submitted: The Secretary, Local Road Transportation Board, Private Bag X3909, Port Elizabeth, 6056.

OP167—OOS-LONDEN. (2) Johannes Gideon Marx, Oos-Londen; vervanging van voertuig. (3) Een 4-sitplek motorkar (CE 43727). (4) Blanke huurmotorpassasiers en hulle persoonlike bagasie. (5) (i) Binne 'n radius van 50 km vanaf Hoofposkantoor, Oos-Londen. (ii) Op toevallige rite vanaf punte binne gebied in (i) hierbo genoem na punte geleë binne 'n radius van 240 km vanaf Hoofposkantoor, Oos-Londen.

OP168—OOS-LONDEN. (2) Johannes Gideon Marx, Oos-Londen; wysiging van magtiging. (3) Ses 4-sitplek motorkarre (CE 59937, CE 58037, CE 43727, CE 21808, CE 32523 en CE 31057). (4) Huurmotorpassasiers (alle klasse) en hulle persoonlike bagasie. (5) (i) Binne 'n radius van 50 km vanaf Hoofposkantoor, Oos-Londen. (ii) Op toevallige rite vanaf punte binne gebied in (i) hierbo genoem na punte geleë binne 'n radius van 240 km vanaf Hoofposkantoor, Oos-Londen.

OP169—EAST LONDON. (2) Errol Desmond van Letyveld, East London; transfer from G. R. Gravett. (3) One 4-seater motor-car (CE 13591). (4) White taxi passengers and their personal effects. (5) On trips within a radius of 50 km from General Post Office, East London.

OP174—WHITTLESEA. (2) Joseph Dumile Nomngacyi, Whittlesea; additional authority, amendment of route. (3) One 21-seater bus, one 81-seater bus, one 80-seater bus and one 72-seater bus (GCB 650, GCB 335, GCB 354 and GCB 376). (4) Non-White passengers and their personal effects. (5) Between Ciskei Border (Thornhill Swart Kei) and Queenstown Bus Terminus via Hopefield, Stockenstroomsloot, Hartbeesnek, Longside, Klaas Smith, Amberdale, Cathcart Road, Robertson Road, Calderwood Road, Shepstone Road, Queens Drive and return via the same route.

Time-table

Depart Ciskei Border (Thornhill Swart Kei) 07h00.
Arrive Queenstown (Terminus) 08h00.
Depart Queenstown (Terminus) 08h30.
Depart Queenstown (Terminus) 11h00.
Arrive Ciskei Border (Thornhill Swart Kei) 13h00.
Depart Ciskei Border (Thornhill Swart Kei) 14h00.
Arrive Queenstown (Terminus) 15h00.

Scale of charges: 2½c per km.

OP172—ADELAIDE. (2) Ismail Fakir Gangat, Adelaide; replacement of vehicle. (3) One 35-seater (4 800 kilogram) lorry (CFJ 407). (4) Non-White scholars or students (pro forma). (5) From points within a radius of 10 km from General Post Office, Adelaide to points situated within a radius of 160 km from General Post Office, Adelaide and return only on Wednesdays, Saturdays, Sundays and public holidays (pro forma).

University of Fort Hare
Together in Excellence

OP165—PORT ELIZABETH. (2) Shefu Masina, Port Elizabeth; additional vehicle. (3) One 9-seater mini-bus to be acquired. (4) Black taxi passengers and their personal effects. (5) Within a radius of 50 km of Post Office, kwaZakhele, Port Elizabeth.

OP163—MIDDELBURG, K.P. (2) Charles Fleissner, Middelburg, K.P.; bykomende magtiging en bykomende voertuig. (3) Een 5-sitplek motorkar (CBP 492). (4) Nie-Blanke huurmotorpassasiers en hul persoonlike besittings. (5) (i) Binne 'n radius van 50 km vanaf Poskantoor, Middelburg, K.P. (ii) Op toevallige rite buite die gebied in (i) hierbo omskryf.

OP164—PATERSON. (2) S.A. Aloe Express (Pty) Ltd, Paterson; replacement of vehicle. (3) One 9 950 kilogram lorry (CAD 4054). (4) (a) Goods. (5) (a) Between points situated within the Magisterial District of Alexandria (pro forma). (4) (b) Non-White organised parties (pro forma). (5) (b) From points situated within a radius of 15 km of Post Office, Paterson, to points situated within a radius of 240 km of Post Office, Paterson and return (pro forma).

OP173—STEYTLERVILLE. (2) Walter Tarentaal, Steytlerville; bykomende voertuig en bykomende magtiging. (3) Een 8-sitplek kombi om aangekoop te word. (4) (a) Nie-Blanke huurmotorpassasiers en hulle persoonlike besittings. (5) (a) Binne 'n radius van 30 km vanaf Poskantoor, Steytlerville. (Voertuig sal opereer vanaf Bosmanstraat 9, Kleurlingwoonbeurt, Steytlerville.)

Bykomende magtiging: (4) (b) Nie-Blanke georganiseerde geselskappe. (5) (b) Binne 'n gebied met 'n radius van 160 km vanaf Poskantoor, Steytlerville en terug.

OP170—OOS-LONDEN. (2) S.A. Spoorwêe & Hawens, Oos-Londen; wysiging van tydtafel. (3) Een bus en een sleepwa (MT 17667 en MT 29513). (4) Nie-Blanke passasiers, bagasie, pakkette, poesakke en goedere. (5) Oor alle bestaande goedgekeurde roetes. Tydtafel: Soos per Bylae B.

BYLAE B

SUID-AFRIKAANSE SPOORWEË/SOUTH AFRICAN RAILWAYS

Notice RTS 3207
Reference RTS 402/201/3
16/7/80
System Manager's Office, East London

Kennisgewing RTS 3207
Verwysing RTS 402/201/3
16/7/80
Afdelingsbestuurder se Kantoor, Oos-Londen

ROAD TRANSPORT SERVICE/PADVERVOERDIENS: KING WILLIAM'S TOWN-KEISKAMMAHOEK
ST MATTHEW'S: SERVICE/DIENS 4018

With effect from , the time-table in respect of the above-mentioned service will be revised as follows:

Met ingang , sal die tydtafel ten opsigte van die bogemelde diens soos volg gewysig word:

Mon. Wed. Ma. Wo	Mon. Wed. Ma. Wo.	Tu. Thu. Di. Do.	Fr. Vr.	Fr. Vr.	Fr. Vr.	Sat. Sa.	Sat. Sa.	Sat. Sa.	Su. So.	Su. So.	Km			Mon. Wed. Fr. Ma. Wo. Vr.	Mon. Wed. Ma. Wo.	Tu Thu. Di. Do.	Fr. Vr.	Fr. Vr.	Fr. Vr.	Sat. Sa.	Sat. Sa.	Sat. Sa.	Su. So	Su. So.
1	3	5	7	9	11	13	15	17	19	21				2	4	6	8	10	12	14	16	18	20	22
V 11h00	17h00	15h15	11h00	15h30	20h15	—	12h00	16h25	—	18h30	—	King William's Town (sta.)	A	09h20	16h40	13h40	14h40	19h50	—	09h20	15h30	—	17h40	—
S	S	S	S	S	S	—	S	S	—	S	6	Ntaka		S	S	S	S	S	—	S	S	—	S	—
S	S	S	S	S	S	—	S	S	—	S	8	kwaMdingi		S	S	S	S	S	—	S	S	—	S	—
S	S	S	S	S	S	—	S	S	—	S	11	kwaKika		S	S	S	S	S	—	S	S	—	S	—
V 11h25	17h25	15h40	11h25	15h55	20h40	—	12h25	16h50	—	19h05	16	Mamata	V	08h50	16h10	13h10	14h10	19h20	—	08h50	15h00	—	17h10	—
S	S	S	S	S	S	—	S	S	—	S	19	Pirie		S	S	S	S	S	—	S	S	—	S	—
S	S	S	S	S	S	—	S	S	—	S	21	Rhino's Rest		S	S	S	S	S	—	S	S	—	S	—
V 11h50	17h50	16h05	11h50	16h20	21h05	—	12h50	17h05	—	19h15	24	Mnggesha	V	08h40	16h00	13h00	14h00	19h10	—	08h40	14h50	—	17h00	—
S	S	S	S	S	S	—	S	S	—	S	27	Bambinja		S	S	S	S	S	—	S	S	—	S	—
S	S	S	S	S	S	—	S	S	—	S	29	Ngqeqe		S	S	S	S	S	—	S	S	—	S	—
S	S	S	S	S	S	—	S	S	—	S	30	kwaMfoxo		S	S	S	S	S	—	S	S	—	S	—
S	S	S	S	S	S	—	S	S	—	S	31	Lulwalweni		S	S	S	S	S	—	S	S	—	S	—
V 12h05	18h05	16h20	12h05	16h35	21h20	—	13h05	17h30	—	19h30	32	Habula PO/PK	V	08h15	15h35	12h35	13h35	18h45	—	08h15	14h25	—	16h35	—
S	S	S	S	S	S	—	S	S	—	S	33	kwaNcanywa		S	S	S	S	S	—	S	S	—	S	—
S	S	S	S	S	S	—	S	S	—	S	35	Magcumeni		S	S	S	S	S	—	S	S	—	S	—
S	S	S	S	S	S	—	S	S	—	S	39	Gculura		S	S	S	S	S	—	S	S	—	S	—
S	S	S	S	S	S	—	S	S	—	S	42	Ngqudele		S	S	S	S	S	—	S	S	—	S	—
A 12h35	18h35	16h50	12h35	17h05	21h50	—	13h35	18h00	—	20h00	45	Keiskammahoek	V	07h40	15h00	12h00	13h00	18h10	—	07h40	13h50	—	16h00	—
V 12h50			—	—	22h00	06h45	—	18h10	14h45	20h10			A	—	13h45	—	—	—	22h40	07h30	—	18h50	15h45	20h50
S			—	—	S	S	—	S	S	S	48	eNgxakaxa		—	S	—	—	—	S	S	—	S	S	S
A 13h05			—	—	22h15	07h00	—	18h25	15h00	20h25	51	St Matthew's	D	—	13h30	—	—	—	22h25	07h15	—	18h35	15h30	20h35

Non-White passengers, luggage, parcels, mails and goods only.
Connects with Service 4016 at Keiskammahoek.

Slegs Nie-Blanke passasiers, bagasie, pakkette, poesakke en goedere.
Sluit aan by Diens 4016 te Keiskammahoek.

D. M. J. BUTLER, SYSTEM MANAGER/AFDELINGSBESTUURDER

University of Fort Hare
Together in Excellence

KIMBERLEY

Adres waarheen verloë gerig moet word: Die Sekretaris, Plaaslike Padvervoerraad, Privaatsak X5019, Kimberley, 8300.

Address to which the representations must be submitted. The Secretary, Local Road Transportation Board, Private Bag X5019, Kimberley, 8300.

OP126—BARKLY-WES/KIMBERLEY. (2) F George, Barkly-Wes; bykomende voertuig met nuwe magtiging. (3) Een 25-sitplek bus aangekoop te word. (4) (a) Nie-Blanke passasiers en hul persoonlike besittings. (5) (a) Vanaf Kleurling Woonbuurt te Barkly-Wes, direk na Kimberley en terug (Totale roete-afstand=35 km)

Voorgestelde tydtafel—Maandae tot Vrydae:

Vertrek Barkly-Wes	06h00
Arriveer Kimberley	06h45
Vertrek Kimberley	18h00
Arriveer Barkly-Wes	18h45

Voorgestelde tariewe: 70c per passasier per enkel rit.

(4) (b) Nie-Blanke georganiseerde geselskappe en hul persoonlike besittings (5) (b) Vanaf Barkly-Wes na punte binne 'n radius van 250 km vanaf Hoofposkantoor, Barkly-Wes en terug.

OP137—KIMBERLEY. (2) Bevin Geerantane, Kimberley; vervanging van voertuig. (3) Een kombi (8 passasiers). (4) Nie-Blanke taxipassasiers en hul persoonlike besittings en enige voedsel en drank bedoel vir hul eie gebruik. (5) Binne die munisipale gebied Kimberley.

OP138—KIMBERLEY (2) David Markgraaf, Kimberley; nuut. (3) Een 6 passasier kombi aangekoop te word. (4) Kleurlingtaxipassasiers en hul persoonlike besittings en enige voedsel en drank bedoel vir hul eie gebruik. (5) Binne 'n radius van 50 km vanaf Hoofposkantoor, Kimberley. (Voertuig gestasioneer en diens te lewer vanaf Spresusstraat 25, Roodepan, Kimberley.)

OP139—LIME ACRES/AGGENEYS. (2) Trencor Services (Pty) Ltd, Springbok; nuut (3) Een tenk-leunwa (29 950 kg). (4) Ongebluste kalk in massa. (5) Vanaf Lime Acres na Aggeneys oor Upington, Kakamas en Pofadder.

OP140—KIMBERLEY (2) Tebobo Shadrack Molikne, Kimberley; oordrag vanaf B. Mothupi met vervanging van voertuig. (3) Een 8-passasiers kombi. (4) Nie-Blanke taxipassasiers en hul persoonlike besittings en enige voedsel en drank bedoel vir hul eie gebruik. (5) (i) Op ritte binne 'n radius of 50 km vanaf Hpk. Kimberley. (ii) Op toevallige ritte vanaf punte binne daardie gebied omskryf in (i) na enige punte buite daardie gebied of vanaf enige punt buite daardie gebied na enige punt binne daardie gebied. Op voorwaardes dat geen passasiers opgelaai word by enige busstop soos neergelê deur die Munisipaliteit van Kimberley.

KAAPSTAD—CAPE TOWN

Adres waarheen verloë gerig moet word: Die Sekretaris, Plaaslike Padvervoerraad, Privaatsak X9021, Kaapstad, 8000.

Address to which representations must be submitted: The Secretary, Local Road Transportation Board, Private Bag X9021, Cape Town, 8000.

H/OP8007/24/08—EERSTERIVIER. (2) John Thomas Daniels, Kleinvlei; vervanging van voertuig. (3) Een kombi—CFM 11716 (8 sitplekke). (4) Nie-Blanke taxipassasiers en hulle persoonlike besittings. (5) (i) Binne 'n gebied met 'n straal van 5 km vanaf huurmotorstaanplek te Keeromstraat, Kleinvlei, Eersterivier. (ii) Toevallige ritte binne 'n gebied met 'n straal van 50 km vanaf huurmotorstaanplek te Keeromstraat, Kleinvlei, Eersterivier.

H/OP8007/28/08—GROOTE SCHUUR, WOODSTOCK. (2) Edward Johnson, Woodstock; nuwe aansoek. (3) Een motorkar aangekoop te word (5 sitplekke). (4) Blanke taxipassasiers en hulle persoonlike besittings. (5) (i) Binne 'n gebied met 'n straal van 5 km vanaf taxistaanplek te Groote Schuur Hospitaal. (ii) Toevallige ritte of (i) binne 'n gebied met 'n straal van 5 km vanaf munisipale taxistaanplek Woodstock. (iii) Toevallige ritte.

H/OP8007/28/03—CAPE TOWN. (2) Stanley John Staley, Milnerton; replacement of vehicle and increase in fares. (3) One motor-car—CA 220-704 (5 passengers). (4) White taxi passengers and their personal effects. (5) (i) Within an area with a radius of 5 km of Central Area Municipal White Taxi Rank. (ii) Casual trips. *Existing tariff:* (i) Start flag fall 30c. (ii) For each 200 m or part thereof 10c. *Proposed new tariff:* (i) Start (flag fall) 60c. (ii) for each 125m or part thereof 10c.

H/OP8007/25/01—SOMERSET WEST. (2) Hoosain Sultan, Firgrove; replacement of vehicle. (3) One bus—CFM 17236 (8 passengers). (4) Non-White taxi passengers and their personal effects. (5) (i) Within an area with a radius of 5 km of taxi rank Church Street, Somerset West. (ii) Casual trips.

H/OP8007/30/05—FRANSCHHOEK. (2) Milton Malcolm Nyreenda, Franschhoek; new application. (3) One combi—CJ 33398 (8 passengers). (4) Coloured taxi passengers and their personal effects. (5) (i) Within an area with a radius of 40 km of Main Road Franschhoek (applicant's residence). (ii) Casual trips.

H/OP8007/30/04—STELLENBOSCH (2) Simon William Oliphant, Stellenbosch; nuwe aansoek. (3) Een kombi—CL 10680 (8 sitplekke). (4) Kleurlingtaxipassasiers en hulle persoonlike besittings. (5) (i) Binne 'n gebied met 'n straal van 5 km vanaf Bergsig Munisipale Taxi Staanplek, Stellenbosch (ii) Toevallige ritte.

H/OP8007/30/03—MITCHELL'S PLAIN. (2) Aziza Sulaiman, Woodstock; additional permits with new ranks. (3) One station-wagon—CA 78011 (5 passengers) and one bus—CA 204-644 (8 passengers). (4) Coloured taxi passengers and their personal effects. *In respect of one vehicle:* (5) (i) Within an area with a radius of 5 km of (Woodlands) Mitchell's Avenue, Mitchell's Plain. (ii) Casual trips. *In respect of one vehicle.* (i) Within an area with a radius of 5 km of top of Park Road Civic Centre, Rocklands, Mitchell's Plain. (ii) Casual trips.

H/OP8007/31/05—STRANDFONTEIN (2) Ronald Engeldoe, Mitchell's Plain; additional permits with new ranks. (3) Two combis to be purchased. (4) Coloured taxi passengers and their personal belongings. (5) (i) Within an area with a radius of 5 km of the proposed taxi rank in Welgelegen Avenue, Strandfontein. (ii) Casual trips within an area with a radius of 150 km of proposed taxi rank in Welgelegen Avenue, Strandfontein, alternatively. (i) Within an area with a radius of 5 km from his residence 9 Salmon Way, Strandfontein (if taxi rank is not established). (ii) Casual trips within an area with a radius of 150 km of residence 9 Salmon Way, Strandfontein.

H/OP8007/30/06—CAPE TOWN. (2) Rehovot (Pty) Ltd, Sea Point; additional authority. (3) Seven motor-cars—CA 21179 (5 passengers), CA 131-434 (3 passengers), CA 271-006 (5 passengers), CA 234-471 (5 passengers), CA 20997 (5 passengers). CA 274462 (5 passengers). CA 177545 (5 passengers). (4) White taxi passengers and their personal effects. (5) (i) Within an area with a radius of 5 km of Cape Town Railway Station. (ii) Casual trips.

A/OP8007/21/01—KAAPSTAD. (2) Johannes Marthinus Hanekom, Ravensmead; wysiging van permit. Bestaande permit met uitbreiding van gebied vanaf 160 km na 480 km en twee bykomende permitte met bestaande magtiging, of alternatief uitbreiding van gebied vanaf 160 km na 480 km. (3) Drie busse—CY 123-830 (14 sitplekke), CY 76781 (10 sitplekke), CY 31650 (11 sitplekke). *Uitbreiding van gebied vanaf 160 km na 480 km ten opsigte van CY 31650:* (4) (a) Nie-Blanke georganiseerde geselskappe en hulle persoonlike besittings en bagasie. (5) (a) Vanaf punte geleë binne die landdrosdistrikte van Bellville, Die Kaap, Goodwood, Simonstad en Wynberg na plekke geleë binne 'n radius van 480 km vanaf H.P.K. Kaapstad en terug. *Bykomende permitte met bestaande magtiging of alternatief—uitbreiding van gebied vanaf 160 km na 480 km ten opsigte van CY 123-830 en CY 76781:* (4) (b) Nie-Blanke georganiseerde geselskappe. (5) (b) Soos bestaande magtiging. *Alternatief:* (4) (c) Nie-Blanke georganiseerde geselskappe en hulle persoonlike besittings en bagasie. (5) (c) Vanaf punte geleë binne die landdrosdistrikte Bellville, Die Kaap, Goodwood, Simonstad en Wynberg na plekke geleë binne 'n radius van 480 km vanaf H.P.K. Kaapstad en terug.

H/OP8007/28/6—NETREG. (2) Masoet Brenner, Retreat; nuwe aansoek. (3) Een bus aangekoop te word. (4) Kleurlingtaxipassasiers en hulle persoonlike besittings. (5) (i) Binne 'n gebied met 'n straal van 5 km vanaf Netreg Munisipale Nie-Blanke Taxistaanplek. (ii) Toevallige ritte.

H/OP8007/28/05—NETREG. (2) Ebrahim Sampson, Steenberg; bykomende permit met nuwe magtiging. (3) Een kombi aangekoop te word (8 sitplekke). (4) Nie-Blanke taxipassasiers en hulle persoonlike besittings. (5) (i) Binne 'n gebied met 'n straal van 5 km vanaf Netreg Munisipale Nie-Blanke Taxistaanplek. (ii) Toevallige ritte.

H/OP8007/25/02—MALMESBURY. (2) Carel Johannes Rinkwest, Malmesbury; bykomende permit met bestaande magtiging. (3) Een kombi—CK 9300 (8 sitplekke). (4) Kleurlingtaxipassasiers en hulle persoonlike bagasie. (5) Binne 'n gebied met 'n straal van 5 km vanaf staanplek in Tuinstraat, Malmesbury.

A/OP8007/28/11—HOUT BAY. (2) S.A. Sea Products Ltd, Hout Bay; amendment of permit (additional authority). (3) One refrigerated semi-trailer—CA 100-525 (15 480 kg). (4) Smoked fresh fish to be altered to smoked salted and fresh fish. (5) Within the areas authorised in Permit OP47940.

A/OP8007/24/04—WELLINGTON. (2) Ben Freddie Wiggins en James Kellerman Wiggins en Pieter Herodus Johannes Jacobs, Wellington; oordrag vanaf Elizebeth Catherine Briers. (3) Een bus—CN 4970 (25 sitplekke). (4) Blanke georganiseerde geselskappe (pro forma). (5) Vanaf Wellington na plekke geleë binne 'n gebied met 'n straal van 160 km van die Hoofposkantoor, Wellington en terug.

A/OP8007/28/10—RIEBEECK-WES. (2) Jacob Loubser en Andries Dreyer en Hendrik Louw, Malmesbury; vervanging van voertuig. (3) Een vragmotor—CK 17838 (4 820 kg). (4) Nie-Blanke prisoniers soos Permit OP45801 voorheen uitgereik ten opsigte van CK 4941. (5) Binne die gebiede gemagtig in bogemelde permit.

A/OP8007/28/09—ELSIE'S RIVER. (2) Alan Bezuidenhout, Kraaifontein; new application. (3) One lorry—CY 62513—2 272 kg. One van—CY 50897—6 818 kg. One truck (not licensed) 6 363 kg. (4) (a) Tools of trade, machinery and plant of which the holder is the sole owner and which is used by the holder or his employees in the course of his business as installation contractors. (5) (a) From the holder's place of business situated

at Elsie's River direct to an installation site situated within an area with a radius of 1 000 km from the holder's said place of business (4) (b) Fuelpumps, fuel tanks together with pipes, fittings, sand, stone, cement, precast concrete blocks, advertising signs and such other accessories as required for the proper erection and installation of fuel pumps and fuel tanks. (5) (b) Within an area with a radius of 1 000 km from the holder's place of business at Elsie's River. (4) (c) Fuel tanks for erection and installation by the holder. (5) (c) Within an area with a radius of 1 000 km from the holder's place of business at Elsie's River. (4) (d) Fuel pumps together with pipes, fittings, sand, stone, cement, precast concrete blocks, advertising signs and such other accessories (excluding fuel tanks) required for the proper erection and installation of fuel tanks and fuel pumps by the holder. (5) (d) Within an area with a radius of 1 000 km from the holder's place of business at Elsie's River. (4) (e) Thirteen thousand six hundred and thirty-eight litre or larger capacity fuel tanks and accessories for installation by the holder. (5) (e) Within an area with a radius of 1 000 km from the holder's place of business at Elsie's River. (4) (f) Own Coloured employees free of charge. (5) (f) Between the holder's place of business situated at Elsie's River and any place situated within the Republic of South Africa where they are to be or have been employed in the course of the holder's business, or from any one such a place of employment situated within the said area, to another such place of employment situated within the same said area.

A/OP8007/28/01—GRABOUW. (2) Johannes Olivier Southey, Barrydale; bykomende magtiging. (3) Agt vragmotors—CCK 5687—60 passasiers—14 990 kg, CCK 3541—15 160 kg, CCK 3551—16 280 kg, CCK 722—14 300 kg, CCK 4287—60 passasiers, 14 420 kg, CCK 5248—8 550 kg, CK 4178—60 passasiers, 8 500 kg, CCK 2005—20 passasiers, 3 050 kg, twee sleepwaens CCK 4298—12 580 kg CCK 5030, 7 360 kg. (4) Pakmateriaal—appelkartonne, appelrakkies en pakpaier. (5) Vanaf Grabouw, Epping, Industria, Paarl en Ceres na Tradouw Vrugtepakkers (Ko-operatief) Bpk., Barrydale.

A/OP8007/28/02—BARRYDALE. (2) Johannes Olivier Southey, Barrydale; vyf bestaande permitte met bykomende magtiging en twee bykomende permitte met bestaande magtiging en bykomende magtiging. (3) Vier vragmotors—CCK 722, 14 300 kg—CCK 5248, 8 550 kg—CCK 3551, 16 280 kg—CCK 3541, 15 160 kg en drie sleepwaes—CCK 5688, 18 770 kg—CCK 3890, 12 120 kg—CCK 4298, 12 580 kg. *Bykomende magtiging ten opsigte van CCK 722, CCK 5248, CCK 3551, CCK 3541 en CCK 4298:* (4) (a) Wyn en/of spiritualieë in tenke. (5) (a) Vanaf Barrydale Koöperatiewe Wynmakery en Stokery na depots van Distillers Korporasie te Montagu, Robertson, Worcester, Stellenbosch, Paarl en Tulbagh. *Bestaande en bykomende magtiging ten opsigte van CCK 5688 en CCK 3890:* (4) (b) Goedere. (5) (b) Tussen punte geleë binne die landdroedistrik Swellendam of tussen genoemde punte en die naaste bushalte, spoorwegstasie of sylyn onderworpe aan die uitdruklike voorwaarde dat geen goedere op- en afgelaai word tussen twee of meer punte geleë op 'n roete wat bedien word deur 'n spoor en/of gemagtigde padvervoerdiens nie. (4) (c) Wyn en/of spiritualieë in tenke. (5) (c) Vanaf Barrydale Koöperatiewe Wynmakery en Stokery na depots van Distillers Koöperasie te Montagu, Robertson, Worcester, Stellenbosch, Paarl en Tulbagh. (4) (d) Wyn en/of spiritualieë in tenke. (5) (d) Vanaf Ladismith Koöperatiewe Wynmakery en Stokery na depots van Distillers Koöperasie sooos K.W.V. Depots te Montagu, Robertson, Worcester, Stellenbosch, Paarl en Tulbagh. (4) (e) Los landbougips (ru in massa). (5) (e) Vanaf Ashtonspoorwegstasie na Barrydale. (4) (f) Graan. (5) (f) Vanaf lande geleë binne 'n gebied met 'n straal van 25 km vanaf Barrydale HPK na die naaste spoorwegstasie of graanstoor. (4) (g) Los droëvrugte onverpak in oop hout houers van ongeveer 500 kg elk ten behoewe van produsente. (5) (g) Binne 'n gebied met 'n straal van 80 km vanaf HPK Barrydale na Suid-Afrikaanse Droëvrugte Koöperasie Bpk. te Worcester. (4) (h) Pakmateriaal—appelkartonne, appelrakkies en pakpapier. (5) (h) Vanaf Grabouw, Epping, Industria, Paarl en Ceres na Tradouw Vrugtepakkers, Barrydale.

H/OP8007/30/02—WELLINGTON. (2) Jacobus Damon Jubies, Wellington; vervanging van voertuig. (3) Een motorkar—CN 2319—5 sitplekke. (4) Nie-Blanke taxipassasiers en hulle persoonlike besittings. (5) (i) Binne 'n gebied met 'n straal van 5 km vanaf Hoofstraat, Wellington. (ii) Toevallige ritte binne 'n gebied met 'n straal van 160 km vanaf Hoofstraat, Wellington.

H/OP8007/30/07—WORCESTER. (2) William Zamile Kotu, Zwelethembala; replacement of vehicle. (3) One combi—CW 4696—8 passengers. (4) Non-White taxi passengers and their personal effects. (5) (i) Within an area with a radius of 50 km of GPO Worcester. (ii) Casual trips.

B/OP—007/30/01—D. F. MALANLUGHAWE. (2) Johan Jacob Ferreira, Bellville; vervanging van voertuie. (3) Een bus—SW 24002—11 sitplekke en een bus aangekoop te word—28 sitplekke. (4) Lagverkeerpassasiers soos Permit OP83043 voorheen uitgereik ten opsigte van SW 42019 en Permit OP83045 voorheen uitgereik ten opsigte van SW 50011. (5) Binne die gebiede gemagtig in bogemelde permitte.

B/OP8006/17/01—KOMAGGAS. (2) Contardo Rudolf Bezuidenhout, Springbok; wysiging van permitte—bykomende magtiging. (3) Een mikrobus—CBU 4402—10 sitplekke en een bus—CBU 3710—26 sitplekke. *Bykomende magtiging ten opsigte van CBU 4402:* (4) (a) Kleurling georganiseerde geselskappe en hulle persoonlike bagasie. (5) (a) Vanaf Komaggas na plekke geleë binne 'n gebied met 'n straal van 250 km van die Hoofposkantoor Komaggas en terug. *Bykomende magtiging ten opsigte van CBU 4402 en CBU 3710 om die diens te Komaggas en Springbok uit te brei sodat dit Woensdag en Vrydag insluit. Springbok en Komaggas:* Vertrek Komaggas Woensdag en Vrydag (heenreis): 07h00. Vertrek Springbok (terugreis): 13h30.

H/OP8007/29/02—PAARL-OOS. (2) Isaac Hendricks, Paarl-Oos, nuwe aansoek. (3) Een motorkar—CJ 1585—5 sitplekke. (4) Kleurlingtaxipassasiers en hulle persoonlike besittings. (5) (i) Binne 'n gebied met 'n straal van 50 km vanaf Food-O-Rama Shopping Centre, Kleinnederburg, Paarl-Oos op die hoek van Lantanastraat en Bougainvilla, Paarl-Oos. (ii) Toevallige ritte.

H/OP8007/25/04—BELHAR. (2) Donald William Ova, Crawford, replacement of vehicle. (3) One micro-bus—CA 111-054—8 passengers. (4) Non-White taxi passengers and their personal effects. (5) (i) Within an area with a radius of 5 km of taxi rank at Chestnut Way, Belhar. (ii) Casual trips.

H/OP—007/28/07—NETREG. (2) Salamodien Brenner, Retreat, nuwe aansoek. (3) Een kombi aangekoop te word—8 sitplekke. (4) Kleurlingtaxipassasiers en hulle persoonlike besittings. (5) (i) Binne 'n gebied met 'n straal van 5 km vanaf Netreg Munisipale Nie-Blanke Taxistaanplek. (ii) Toevallige rits.

A/OP8007/17/04—KAAPSTAD. (2) S.A. Spoorweg Administrasie, Kaapstad; bykomende magtiging en wysiging van tydtafel. (3) Ses passasiersbusse—MT 17837—71 sittende en 10 staande, MT 17840—73 sittende en 14 staande, MT 17811—73 sittende en 14 staande, MT 17836—71 sittende en 10 staande, MT 17834—73 sittende en 14 staande, MT 17845—73 sittende en 14 staande. *Bykomende magtiging:* (4) (a) Slegs Nie-Blanke spoorwegwerkers teen spoorwegtarief en teen spoorwegvoervoorwaardes. (5) (a) Tussen Atlantis en Kaapstad. *Wysiging van tydtafel:* (4) (b) Soos per aangehegte Bylae A. *Bestaande tydtafel:* (4) (c) Soos per aangehegte Bylae B.

CONT

IN LUMINE TUO VIDEBIMUS LUMEN
University of Fort Hare
Together in Excellence

GEWYSIGDE TYDTAFEL—BYLAE A

KAAPSTAD / CAPE TOWN - DARLING - HOPEFIELD - VREDENBURG - SALDANHA (1004)

Weekdae Weekdays	Ma. Wo. Vr. So. Mo We Fr Sa	Di Tu	Sa.	Vr. Fr.	So So	Ma tot Vr. Mo. to Fr	Ma Di Wo Vr Mo Tu We Fr.	Daagliks Daily	Do Th	Vr Fr.	Ma tot Sa. Mo to Sa.	Sa.	km	STOPPLEKKE STOPPING PLACES		Weekdae Weekdays	Ma. Wo Vr Sa. Mo We. Fr. Sa.	Di Tu.	Sondae Sundays		Vr. Fr	Daagliks Daily	Weekdae Weekdays	Ma tot Vr Mo to Fr	Vr. Fr	Ma Mo	Ma. tot Do. Mo to Th	Vr Fr	Sa
1	3	5	7	9	11	*13	*15	*17	*19	*21	*23	*25		Kaapstad/Cape Town		2	4	6	8	10	12	*14	*16	*18	*20	*22	*24	*26	*28
V 09h00	17h00	17h00	13h30	15h15	16h00	—	—	—	—	—			—	Bussenstel/Bus Stand 1	A	17h25	09h00	09h30	16h00	21h15	20h30	—	—	—	—				
V 09h15	17h15	17h15	13h50	15h30	16h15	16h45	17h15	17h15	17h15	13h00			—	Bussenstel/Bus Stand 2	A	17h10	08h45	09h15	15h45	21h00	20h15	06h15	07h15	07h30	17h00				
—	—	—	—	—	—	—	—	—	—	—			4	Paardeland (Y)		—	—	—	—	—	—	—	—	—	—				
—	—	—	—	—	—	—	—	—	—	—			12	Goedwoud (Y)		—	—	—	—	—	—	—	—	—	—				
—	—	—	—	—	—	—	—	—	—	—			21	Potsdam (Y)		—	—	—	—	—	—	—	—	—	—				
V —	—	—	—	—	—	—	17h25 S	17h25 S	17h25 S	13h10 S			6	Paardeland (Dwarsrivier/Cannery)		—	—	—	—	—	—	S	S	—	—				
—	—	—	—	—	—	—	S	S	S	S			9	Milnerton (Cambridgeland/Heat)		—	—	—	—	—	—	S	S	—	S				
—	—	—	—	—	—	—	S	S	S	S			15	Lure Gun (Killarneyland/Heat)		—	—	—	—	—	—	S	S	—	S				
—	—	—	—	—	—	—	—	—	—	—			19	Potsdam (Y)		—	—	—	—	—	—	—	—	—	—				
S	S	—	S	—	—	S	S	S	S	S			25	Kilnerneb		S	S	—	S	—	—	S	S	S	S				
S	S	—	S	—	—	S	S	S	S	S			30	(X) Atlantis		S	S	—	S	—	—	S	S	S	S				
S	S	—	S	—	—	—	—	—	S	S			57	Mamre (-deep/Town)		S	S	—	S	—	—	—	S	—					
A —	—	—	—	—	—	10h15	10h30	10h30	10h40	14h15					V	15h50	07h30	—	14h35	—	—	05h00	06h00	06h00	15h45				
V 10h40	18h50	—	15h15	—	—								76	Darling (Sta.)		—	—	—	—	—	—								
S	S	—	S	—	—								90	Koppe		S	S	—	S	—	—								
S	S	—	S	—	—								93	Wolwedans		S	S	—	S	—	—								
S	S	—	S	—	—								103	Sheffield		S	S	—	S	—	—								
S	S	—	S	—	—								114	Kapteinsvlei (-s/yn/Siding)		S	S	—	S	—	—								
V 1135	—	—	—	—	—										V	14h55	—	—	—	—	—								
															A	14h50	—	—	—	—	—								
V 11h45	19h25	—	16h05	—	—						06h30		122	Hopefield (-deep/Town)	V	S	08h35	—	13h35	—	—					06h20	19h10	17h55	
S	S	—	S	—	—						S		122	Hopefield (Sandlighers/Mission Church)		S	S	—	S	—	—					S	S	S	
S	S	—	S	—	—						S		141	Saptebeurs		S	S	—	S	—	—					S	S	S	
—	—	—	—	—	—						—		147	Langebaan (Y)		—	—	—	—	—	—					—	—	—	
—	—	S	—	S	S						—		116	Langebaan		—	—	S	—	S	S					—	—	—	
—	—	—	—	—	—						—		121	Langebaan (Y)		—	—	—	—	—	—					—	—	—	
—	—	—	—	—	—						—		122	Langebaanweg (Y)		—	—	—	—	—	—					—	—	—	
V 12h10	19h45	18h50	16h25	S	S						S	10h00	123	Langebaanweg (Sta.)	V	14h05	06h10	07h35	13h10	S	S					S	18h50	S	09h50
—	—	—	—	—	—						—	—	122	Langebaanweg (Y)		—	—	—	—	—	—					—	—	—	—
S	S	S	S	S	S						S	S	128	Langebaanfeld (Sta.)		S	S	S	S	S	S					S	S	S	S
A —	—	—	—	—	—						07h15	10h30			V	13h45	05h50	07h15	12h50	19h00	18h15					05h35	18h30	17h15	09h30
V 12h35	20h05	19h15	16h45	17h30	18h15								138	Vredenburg (Sta.)		—	—	—	—	—	—								
S	S	S	S	—	—								138	Vredenburg (Pk./P.O.)		S	S	S	S	—	—								
S	S	S	S	S	S								141	Whitlar (-s/yn/Siding)		S	S	S	S	S	S								
A 12h50	20h20	19h30	17h00	17h45	18h30								151	Saldanha (Sta.)	V	13h15	05h30	07h00	12h30	19h45	18h00								

(X) (i) Slegs spoorweggebruiker tussen spoorwegfeld en spoorvervoerverwandes word plaaslik tussen Atlantis en Kaapstad vervoer.

(ii) Goedere tussen standard pakvervoerstasiewe word slegs van Atlantis na Kaapstad en omgekeerd vervoer.

* Slegs Nie-Blanke passasiers, bagasie en dringende lige pakkette.

(X) (i). Only railway staff will be conveyed locally between Atlantis and Cape Town at rail fares and conditions.

(ii) Goods will only be conveyed from Atlantis to Cape Town and vice versa at standard road transport rates.

* Non-White passengers, baggage and urgent light parcels only

ROAD TRANSPORT SERVICE—PADVERVOERDIENS

KAAPSTAD - DARLING - HOPEFIELD - VREDENBURG - SALDANHA (1003)/CAPE TOWN - DARLING - HOPEFIELD - VREDENBURG - SALDANHA (1003)

Die spoorlyf en bestemmelsels van hierdie diens is met ingang van 1 Februarie 1979 soos volg gewysig.
With effect from 1 February 1979 the heading and particulars have been revised as follows:

Weekdae Weekdays 1†	Ma., Wo., Vr., Sa. Mo., We., Fr., Sa. 3†	Di. Tu. 5†	Sa. 7†	Ma. tot Vr. M. to Fr. 9*	Ma., Di., Wo., Vr. Mo., Tu., We., Fr. 11*	Do. Th. 13*	Vr. Fr. 15*	Ma tot Sa Mo. to Sa. 17*	Vr. Fr. 19*	Sa.	km		Weekdae Weekdays 2†	Ma., Wo., Vr., Sa. Mo., We., Fr., Sa. 4†	Di. Tu. 6†	Sa Sa. 8†	Weekdae Weekdays 10*	Ma. tot Vr. Mo. to Fr. 12*	Vr. Fr 14*	Ma Mo 16*	Ma tot Do Mo. to Th. 18*	Vr. Fr. 20*	Sa. 22*
V 09h00	17h00	17h00	13h30	—	—	—	—				—	Kaapstad/Cape Town (-/Bussteiglplek/Bus Stand 1)	A 17h25	09h00	09h30	14h00	08h00	08h00	—				
V 09h15	17h15	17h15	13h30	16h45	17h15	17h15	13h00				—	Kaapstad/Cape Town (-/Bussteiglplek/Bus Stand 2)	A 17h10	08h45	09h15	15h45	07h15	07h30	17h00				
—	—	—	—	—	—	—	—				4	Milnerton (-/pakweskuiling/Road Junction)	—	—	—	—	—	—	—				
—	—	—	—	—	—	—	—				8	Goodwood (-/pakweskuiling/Road Junction)	—	—	—	—	—	—	—				
—	—	—	—	—	—	—	—				14	Bellville	—	—	—	—	—	—	—				
—	—	—	—	—	—	—	—				21	Paarden (-/pakweskuiling/Road Junction)	—	—	—	—	—	—	—				
V —	—	—	5	—	17h25	17h25	13h10				6	Parklands/Road (Bellville-station/Station)	—	—	—	—	07h10	—	—				
—	—	S	—	—	S	S	S				10	Muizenberg (Cambridge Road)	—	—	S	—	S	S	S				
—	—	—	—	—	S	S	S				16	Lion Gate (Kilkenny Hotel)	—	—	—	—	S	S	S				
—	—	—	—	—	—	—	—				20	*Paarden (-/pakweskuiling/Road Junction)	—	—	—	—	—	—	—				
S	S	—	S	S	S	S	S				26	Kleinmond	S	S	—	S	S	S	S				
S	S	—	S	S	S	S	S				34	Melkbosstrand	S	S	—	S	S	S	S				
S	S	—	S	S	S	S	S				45	Atlantis (-/pakweskuiling/Road Junction)	S	S	—	S	S	S	S				
—	—	—	—	—	—	—	—				48	‡Atlantis	—	—	—	—	—	—	—				
S	S	—	S	S	S	S	S				45	Atlantis (-/pakweskuiling/Road Junction)	S	S	—	S	S	S	S				
S	S	—	S	S	S	S	S				48	Hermanus	S	S	—	S	S	S	S				
S	S	—	S	S	S	S	S				53	Sandbaai	S	S	—	S	S	S	S				
V 10h15	18h15	—	14h40	—	—	S	S				58	Mossel (-/dorp/Town)	V 16h15	07h55	—	14h55	S	—	—				
A S	S	—	S	10h15	10h30	18h00	14h15				76	Darling (stn.)	V 13h00	07h35	—	14h35	08h00	08h00	15h45				
V 10h40	18h50	—	15h15										A S	S	—	S							
V 10h40	18h50	—	15h15								88	Koeberg	S	S	—	S							
S	S	—	S								93	Brijmanzil	S	S	—	S							
S	S	—	S								103	Blaauwberg	S	S	—	S							
S	S	—	S								116	Koperbeitelsie (-/pitsa/Siding)	S	S	—	S							
V 11h35	—	—	—								120	Hopefield (stn.)	V 14h55	—	—	—							
V 11h45	19h25	—	16h05					08h30	18h00		124	Hopefield (-/dorp/Town)	A 14h50	06h35	—	13h35				06h30	19h10	17h35	
—	—	—	—					—	—		147	Langebaan (-/pakweskuiling/Road Junction)	—	—	—	—				—	—	—	
—	—	S	—					—	—		16	Blaauwpunt (-/pakweskuiling/Road Junction)	—	—	S	—				—	—	—	
—	—	S	—					—	—		28	Melkbosstrand (-/pakweskuiling/Road Junction)	—	—	S	—				—	—	—	
—	—	S	—					—	—		48	Silwerstrand (-/pakweskuiling/Road Junction)	—	—	S	—				—	—	—	
—	—	S	—					—	—		77	Yzerfontein (-/pakweskuiling/Road Junction)	—	—	S	—				—	—	—	
		S									116	Langebaan			S								
—	—	S	—					—	—		121	Langebaan (-/pakweskuiling/Road Junction)	—	—	S	—				—	—	—	
—	—	—	—					—	—		122	Langebaanweg/Road (-/pakweskuiling/Road Junction)	—	—	—	—				—	—	—	
V 12h10	19h45	15h50	16h25					S	—	10h00	123	Langebaanweg/Road (stn.)	V 14h05	06h10	07h35	13h10				S	18h50	S	09h30
—	—	—	—					—	—	—	122	Langebaanweg/Road (-/pakweskuiling/Road Junction)	—	—	—	—				—	—	—	—
S	S	S	S					S	S	S	128	Langebaan (stn.)	S	S	S	S				S	S	S	S
A —	—	—	—					07h15	18h40	10h30	138	Vredenburg (stn.)	V 13h45	05h50	07h15	12h50				05h35	18h30	17h15	09h30
V 12h35	20h05	19h15	16h45																				
S	S	S	S								138	Vredenburg (Pk./P.O.)	S	S	S	S							
A 12h50	20h20	19h30	17h00								151	Saldanha (stn.)	V 13h15	05h30	07h00	12h30							

Passiers uit sir plastik tuwe Kaapstad (stn.) en Melkbosstrand vervoer word sir/Passengers will not be conveyed locally between Cape Town (stn.) and Melkbosstrand

† Slegs Blanke en Nie-Blanke passiers, bagasie en dringende ligte pakkette/White and Non-White passengers baggage and urgent light parcels only.

* Slegs Nie-Blanke passiers, bagasie en dringende ligte pakkette/Non-White passengers, baggage and urgent light parcels only.

Bussteiglplek/Bus Stand 1—Slegs Blanke passiers/White passengers only.

Bussteiglplek/Bus Stand 2—Slegs Nie-Blanke passiers/Non-White passengers only.

‡ Slegs goedere/Goods only.

University of Fort Hare
Together in Excellence

BLOEMFONTEIN

Adres waarheen vertoë gerig moet word: Die Sekretaris, Plaaslike Padvervoerraad, Privaatsak X20579, Bloemfontein, 9300.

Address to which representations must be submitted: The Secretary, Local Road Transportation Board, Private Bag X20579, Bloemfontein, 9300.

Alle tydtafels en tarieflyste ter insae by Plaaslike Raad se Kantore.

All time-tables and tariff lists for inspection at Local Board's offices.

OP209—BETHLEHEM. (2) Ntikoe Amon Motaung, handeldrywend as Amon Motaung Busdiens, Theijanestraat 2006 Swart Woonbuurt Bethlehem; nuwe aansoek. (3) Een bus om aangekoop te word. (4) Swart passasiers en hul persoonlike bagasie. (5) Tussen Bethlehem en Ficksburg. *Heenrit:* Vanaf busterminus in Cambridgestraat voor Bethlehem Spoorwegstasie met Cambridgestraat links met Commissionerstraat dan met Hoofpad P18-8 tot by Pad A47 regs met A47 vir 200 meter en terug met A47 tot by P18-7 met P18-7 tot by Ficksburg links in McCabestraat, links in Erweestraat, links in Vanandelstraat tot by taxi staanplek by Ficksburgstasie. *Terugrit:* Vanaf taxi staanplek by Ficksburgstasie met Vanandelstraat, regs by Brandstraat, regs by McCabestraat en dan met Pad P18-7 tot by Pad A47 links met Pad A47 vir 200 meter terug met A47 tot by P18-8 links met P18-8 tot in Commissionerstraat Bethlehem, links met Cambridgestraat tot by busterminus voor die Bethlehem Spoorwegstasie.

Tydtafel

Heenrit		*Stop*	*Afstand*	*Terugrit*	
V	06h30	Bethlehemstasie	—	A	12h00
A	07h45	Fouriesburgkruispad	49,7	V	10h45
V	07h55	Fouriesburgkruispad	—	A	10h35
A	08h30	Ficksburgstasie	50,3	V	10h00

Tarief: Bethlehem na Fouriesburg R2,20; Fouriesburg na Ficksburg R2,20; Bethlehem na Ficksburg (direk) R4.

OP2[illegible]—BLOEMFONTEIN. (2) Catherine Singonzo, 6460 Phahameng Swart Woonbuurt, Bloemfontein; vervanging van OB 18310. (3) OB 94371—motorkar. (4) Soos bestaande goedgekeurde magtiging (PP87937). (5) Binne die bestaande goedgekeurde gebied. (Voertuig sal opereer vanaf 6460 Phahameng Swart Woonbuurt, Bloemfontein.)

OP222—BULTFONTEIN. (2) Motshabi Willem Modukanele, Basisstraat 348, Swart Woonbuurt Bultfontein; vervanging van OKB 6980. (3) Een kombi—OKB 5685. (4) Swart taxipassasiers en hulle persoonlike bagasie. (5) Binne die bestaande goedgekeurde gebied OP49707.

OP223—BLOEMFONTEIN. (2) Lazarus Seraseng, Selesho, 11557 Moshoeshoe Road, Rocklands, Bloemfontein; new application. (3) One motor-car—OB 60251. (4) Black and Coloured taxi passengers and their personal effects. (5) Within the municipal area of Bloemfontein. (Vehicle will be operated from 11557 Moshoeshoe Road, Rockland, Bloemfontein.)

OP224—BLOEMFONTEIN. (2) Suzan Mapetso Tsolo, 11869 Sefatsa Street, Rocklands, Bloemfontein; new application. (3) One motor-car—OB 24848. (4) Black and Coloured taxi passengers and their personal effects. (5) Within the Bloemfontein municipal area. (Vehicle will be operated from 11869 Sefatsa Street, Rocklands, Bloemfontein.)

OP225—FICKSBURG. (2) Simon Letabe, 853/2 Swart Woonbuurt Ficksburg; bykomende magtiging. (3) Drie busse—OG 6715, OG 1918, OG 4217. (4) Swart en Kleurlingpassasiers en hulle persoonlike bagasie. (5) *Roete omskrywing:* Vertrek vanaf Stop 1 en reis in Peka se rigting tot by kruising met die Peka/Ladybrandpad (S333). Draai op S333 in Ladybrand rigting en reis aan verby Stop 3 tot die aansluitingspad tussen S333 en die Clocolan/Pekapad (S386). Draai regs af in die aansluitingspad (S924) en reis tot by aansluiting met S386. Draai links in S386 en reis tot by aansluiting met die Marquard/Clocolan/Tandjesbergpad. Draai regs in die rigting van Clocolan/Marquard en ry tot waar die Clocolan/Hammoniespad kruis. Draai links en reis deur Clocolan-dorp met Eerste Straat Suid tot die kruising met Andries Pretoriuslaan. Draai regs in laasgenoemde laan en ry tot by Clocolan Lokasie. Terug met dieselfde roete.

Afstande tussen stilhoupunte:

Vanaf	*Na*	*Afstand*	*Kumulatiewe afstand*
Stop 1	Stop 2	4,7 km	4,7 km
Stop 2	Stop 3	1,9 km	6,6 km
Stop 3	Stop 4	2,6 km	9,2 km
Stop 4	Stop 5	2,4 km	11,6 km
Stop 5	Stop 6	13,0 km	24,6 km
Stop 6	Stop 1	11,7 km	36,3 km

Tydtafel

Heenroete:

Stop	*Arriveertyd*	*Vertrektyd*
1	08h30	08h40
2	08h47	08h52
3	09h00	09h10
4	09h15	09h25
5	09h40	09h45
6	10h15	—

Terugroete:

Stop	*Arriveertyd*	*Vertrektyd*
6	—	14h00
1	14h15	14h20
2	14h27	14h32
3	14h40	14h45
4	14h50	14h55
5	15h10	—

Stop	*Omskrywing van stop*
1.	Punt 6,5 km op Clocolan/Pekapad (S386) vanaf kruising van hierdie pad met die Clocolan/Tandjiesbergpad.
2.	Kruising van Clocolan/Pekapad (S386), met Peka/Ladybrandpad (S333).
3.	Op Peka/Ladybrandpad (S333) by afdraaipad na die plaas Pietersdal.
4.	By kruising van Peka/Ladybrandpad (S333) met pad wat S333 met die Clocolan/Pekapad verbind (S924).
5.	Punt op verbindingspad (S924) 5,4 km vanaf Stop 4.
6.	Clocolan Lokasie.

Tarief:

Vanaf Stop 1 tot Stoppe 2, 3, 4, 5 en 6: 60c
Vanaf Stop 6 tot Stoppe 1, 2, 3, 4 en 5: 60c.

OP226—LADYBRAND. (2) Makolitso Agnes Matobako, 40 Brightside Black Township, Ladybrand; replacement of ON 4676. (3) One combi—ON 5666. (4) Black taxi passengers and their personal effects. (5) Within existing approved area OP49064.

OP227—THABA NCHU. (2) Nkosiedwa Johannes Mathe, Galala Swart Woonbuurt, Thaba Nchu; vervanging van YBK 1180. (3) Een kombi—YBK 1332. (4) Swart en Kleurlingtaxipassasiers en hulle persoonlike bagasie. (5) Binne bestaande goedgekeurde gebied PP87391.

OP228—BLOEMFONTEIN. (2) Johannes Mohau Nchake, Ntemastraat 20557, Rocklands, Bloemfontein; nuwe aansoek. (3) Een motorkar—OB 54341. (4) Swart taxipassasiers en hulle persoonlike bagasie. (5) Binne 'n radius van 30 km vanaf HPK Bloemfontein. (Voertuig sal vanaf Ntemastraat 20557, Rocklands, opereer.)

OP229—BLOEMFONTEIN. (2) Benjamin Jerome Dingaan, Melkstraat 2579, Bochabela Swart Woonbuurt, Bloemfontein; bykomende voertuig. (3) Een motorkar—OB 13331. (4) Nie-Blanke taxi passasiers en hulle persoonlike bagasie. (5) Binne bestaande goedgekeurde gebied PP64749. (Voertuig sal vanaf 2579 Bochabela Swart Woonbuurt opereer.)

OP230—BLOEMFONTEIN. (2) Dirk Samuel Botha, Plot 18, Mullerlaan, Bainsvlei, Bloemfontein; nuwe aansoek. (3) Een laebakleunwn om aangekoop te word. (4) Grondverskuiwingsmasjinerie, trekkers, ele vakmansgereedskap toerusting en onderdele vir onmiddellike herstel van masjinerie. (5) (a) Vanaf Bloemfontein na punte binne die RSA en terug. (b) Tussen konstruksieterreine in die RSA.

OP231—BLOEMFONTEIN. (2) Chaka Peter Booysen, 1281 Rocklands Woonbuurt, Bloemfontein; nuwe aansoek. (3) Een motorkar om aangekoop te word. (4) Swart taxipassasiers en hulle persoonlike bagasie. (5) Binne die munisipale gebied Bloemfontein. (Voertuig sal vanaf 12821 Rocklands Woonbuurt, Bloemfontein, opereer.)

OP233—LINDLEY-BETHLEHEM. (2) Elijah Mofokeng, Coetzeestraat 337, Bethlehem; wysiging van permitte verwydering van beperking. (3) Twee busse—OA 1127 en OA 3231. (4) Nie-Blanke passasiers en hulle persoonlike bagasie. (5) Oor bestaande goedgekeurde roete tussen Bethlehem en Lindley. Beperking: dat op die heenreis vanaf Lindley na Bethlehem geen passasiers binne Lindley munisipale gebied opgelaai en dieselfde passasiers binne Bethlehem munisipale gebied afgelaai mag word nie en dat met die terugreis geen passasiers binne die Bethlehem munisipale gebied opgelaai en dieselfde passasiers binne Lindley munisipale gebied afgelaai mag word nie.

OP234—BLOEMFONTEIN. (2) Elia Mohapi, 17018/9 Swart Woonbuurt, Bloemfontein; bykomende voertuig met nuwe magtiging. (3) Een kombi om aangekoop te word. (4) Nie-Blanke taxipassasiers en hulle persoonlike bagasie. (5) Binne die landdrosdistrik Bloemfontein. (Voertuig sal vanaf 17018/9 Rocklands opereer.)

OP235—BLOEMFONTEIN. (2) Clifford Ronald Ward, Albert Schweitzerstraat 33, Heidedal, Bloemfontein; vervanging van OB 21831. (3) Een motorkar—OB 94517. (4) Nie-Blanke taxipassasiers en hulle persoonlike bagasie. (5) Binne die goedgekeurde bestaande gebied PP64758.

OP236—WITSIESHOEK. (2) Ben Molefe, Molemelastore, Brand Post Witsieshoek; new application. (3) One combi to be acquired. (4) Black taxi passengers and their personal effects. (5) Within a radius of 50 km from Tsheseng Post Office Witsieshoek. (Vehicle will be operated from Molemelastore Brand Post Witsieshoek.)

OP237—BLOEMFONTEIN. (2) Southern Cross Manufacturing Co. (Pty) Ltd, Nuffield Street, Hamilton Industrial Area, Bloemfontein; new application. (3) Three semi trailers. (4) Own fabrications of windmills towers pipes and agricultural pumping and irrigation equipment for galvanising by means of vehicles belonging to Ekalb Beleggings (Pty) Ltd, trading as Blakes Transport. (5) From the applicants place of business at Nuffield Street, Hamilton, Bloemfontein, to contractors in the Reef area and return to the applicants place of business after its been galvanised.

POTCHEFSTROOM

Adres waarheen vertoë gerig moet word. Die Sekretaris, Plaaslike Padvervoerraad, Privaatsak X925, Potchefstroom, 2520

Address to which representations must be submitted. The Secretary, Local Road Transportation Board, Private Bag X925, Potchefstroom, 2520.

OP538—WELKOM. (2) Bochiwe Elisa Simila, Welkom; nuwe aansoek. (3) Een kombi om aangekoop te word (8 passasiers). (4) Swart taxipassasiers en hul persoonlike bagasie. (5) Vanaf staanplek voor Oasis Padkafee te Riebeeckstad, Welkom, na punte geleë binne 'n radius van 20 km vanaf Welkom HPK en terug met die reg egter om passasiers op te laai op enige punt binne applikant se trefgebied.

OP551—VIRGINIA. (2) Daniel T. Tshabalala, Virginia; replacement of vehicle. (3) One combi—OXV 16314 (8 passengers). (4) and (5) To obtain the same authority as held by vehicle to be replaced.

OP548—STILFONTEIN. (2) Joseph S. Motetemi, Stilfontein; bykomende voertuig. (3) Een kombi om aangekoop te word (8 passasiers). (4) Swart taxipassasiers en hul persoonlike bagasie. (5) Binne 'n radius van 15 km vanaf Noligwa Hostel, Vaal Reefsmyn, Orkney. (Staanplek Noligwa Hostel.)

OP555—VIRGINIA. (2) Themba Mishack Soka, Virginia; nuwe aansoek. (3) Een kombi om aangekoop te word (8 passasiers). (4) Swart taxipassasiers en hulle persoonlike bagasie. (5) Vanaf Swart taxistaanplek in Meloding, Virginia, na punte geleë binne 'n radius van 20 km vanaf Virginia HPK en terug met dien verstande dat die applikant gemagtig sal wees om passasiers op te laai op enige punt binne sy trefgebied.

OP553—WELKOM. (2) Nobomvu Sarah Tembo, Welkom; nuwe aansoek. (3) Een kombi om aangekoop te word (8 passasiers). (4) Swart taxipassasiers en hul persoonlike bagasie. (5) Vanaf staanplek te Mothusiestasie na punte geleë slegs binne Thabong Swart Woongebied en terug met dien verstande egter dat applikant die reg sal hê om passasiers op enige punt binne Thabong op te laai.

OP549—STILFONTEIN. (2) Solomon, Moleko Ramatlotlo, Stilfontein; new application. (3) One motor-car to be acquired (5 passengers). (4) Black taxi passengers and their personal effects. (5) Within a radius of 15 km from Noligwa Hostel, Vaal Reefs Mine, Orkney. (Vehicle will operate from Noligwa Hostel, Vaal Reefs, Orkney.)

OP557—STILFONTEIN. (2) Hartebeesfontein GM Co. Ltd, Stilfontein; replacement of vehicle. (3) One bus—DNG 315T (14 passengers). (4) and (5) To obtain the same authority as held by vehicle to be replaced.

OP547—STILFONTEIN. (2) J. Sikhakhane, Stilfontein; replacement of vehicle. (3) One motor-car—BWR 292T (5 passengers). (4) and (5) To obtain the same authority as held by vehicle to be replaced.

OP566—POTCHEFSTROOM. (2) Mastertrends (Tvl) (Pty) Ltd, Potchefstroom; additional vehicle. (3) One lorry—DNT 527T (2 920 kg). (4) and (5) To obtain the same authority as held by existing vehicles.

OP556—ODENDAALSRUS. (2) Kashe Daniel Matsunyane, Odendaalsrus; nuwe aansoek. (3) Een kombi om aangekoop te word (8 passasiers). (4) Swart taxipassasiers en hul persoonlike bagasie. (5) Binne 'n radius van 30 km vanaf Odendaalsrus Pk. (Staanplek: Kutlwanongwoonbuurt.)

OP554—WELKOM. (2) Mochela Petrus Lekitlane, Welkom; nuwe aansoek. (3) Een kombi—OKE 12908 (8 passasiers). (4) Swart taxipassasiers en hul persoonlike bagasie. (5) Vanaf staanplek op perseel van Ernest Oppenheimerhospitaal in Welkom na punte geleë binne 'n radius van 16 km vanaf Welkom HPK en terug met dien verstande dat die applikant geregtig sal wees om passasiers op te laai op enige punt binne sy trefgebied.

OP341—WELKOM. (2) Tefo Dawid Litlhakanyane, Welkom; bykomende voertuig met nuwe magtiging. (3) Een kombi om aangekoop te word (8 passasiers). (4) Swart taxipassasiers en hul persoonlike bagasie. (5) Vanaf Thabong na punte geleë binne die munisipale gebied van Welkom en terug. (Staanplek: Motsethabongposkantoor.)

OP536—WELKOM. (2) Teboho Mule, Welkom; nuwe aansoek. (3) Een kombi OKE 22692 (8 passasiers). (4) Swart taxipassasiers en hul persoonlike bagasie. (5) Vanaf staanplek voor Oasis Padkafee na punte geleë binne 'n radius van 20 km vanaf Welkom HPK en terug met die reg egter om passasiers op te laai op enige punt binne sy trefgebied.

OP541—KLERKSDORP. (2) H. J. Appels, Klerksdorp; vervanging van voertuig. (3) Een mikrobus—BSW 298T (8 passasiers). (4) en (5) Om dieselfde magtiging te verkry soos gehou deur voertuig vervang staan te word.

OP477—ODENDAALSRUS. (2) Martha Emely Malete, Odendaalsrus; nuwe aansoek. (3) Een kombi om aangekoop te word (8 passasiers). (4) Swart taxipassasiers en hul persoonlike bagasie. (5) Binne 'n radius van 12 km vanaf Odendaalsrus HPK. (Staanplek: Taxistaanplek in Odendaalsrus.)

OP537—VIRGINIA. (2) Thabo Petrus Khuto, Virginia; bykomende magtiging. (3) Een kombi—OXV 1486 (8 passasiers). (4) Swart taxipassasiers en hul persoonlike bagasie. (5) (a) *Bestaande magtiging:* Binne 'n radius van 50 km vanaf Virginia HPK. (Voertuig gestasioneer te word en te opereer vanaf Meloding Swart Woonbuurt.) (5) (b) *Bykomende magtiging:* Toevallige ritte binne 'n radius van 260 km vanaf Virginia HPK en terug.

OP469—KLERKSDORP. (2) Motshidisi Martha Stevenson, Klerksdorp; nuwe aansoek. (3) Een kombi om aangekoop te word. (4) Swart taxipassasiers en hul persoonlike bagasie. (5) Binne 'n radius van 25 km vanaf Klerksdorp HPK. (Staanplek: Hooftaxistaanplek, Golfstraat, Klerksdorp.)

OP573—WELKOM. (2) Joel Thuloane Khoatsane, Welkom; replacement of vehicle. (3) One combi—OKE 50817 (7 passengers). (4) and (5) To obtain the same authority as held by vehicle to be replaced.

OP542—VIRGINIA. (2) Free State Saaiplaas Gold Mining Co. Ltd, Virginia; replacement of vehicle. (3) One motor-car—OXV 2690 (1 105 kg). (4) and (5) To obtain the same authority as held by vehicle to be replaced.

OP572—COALBROOK. (2) S. Dhlamini, Deneysville, vervanging van voertuig deur middel van voertuig behorende aan Jackson Mofula. (3) Een bus—OIL 32749 (8 passasiers). (4) en (5) Om dieselfde magtiging te verkry soos gehou deur voertuig vervang staan te word.

OP571—KLERKSDORP. (2) Dawid Kgalapa, Klerksdorp; replacement of vehicle. (3) One combi—DMD 883T (8 passengers). (4) and (5) To obtain the same authority as held by vehicle to be replaced.

OP570—VILJOENSKROON. (2) Ariel Tsotsotso, Viljoenskroon, nuwe aansoek. (3) Een kombi—TV 23888 (8 passasiers). (4) Swart taxipassasiers en hul persoonlike bagasie. (5) Vanaf staanplek by Kampongs 8 en 9 van Vaal Reefs No. 1 en 2 Skagte na punte geleë binne 'n radius van 40 km vanaf Kampongs 8 en 9 van Vaal Reefs No. 1 en 2 Skagte, Orkney, en terug.

OP561—WELKOM. (2) January Molefi Motaung, Welkom; additional vehicle with new authority. (3) One combi to be acquired (8 passengers). (4) Black taxi passengers and their personal effects. (5) Within a radius of 20 km from Welkom GPO. (Operating from the main taxi rank in Bok Street, Welkom.)

OP563—ALLANRIDGE. (2) Michael Makhasana, Allanridge; bykomende voertuig. (3) Een kombi om aangekoop te word (8 passasiers). (4) Swart taxipassasiers en hulle persoonlike bagasie. (5) Binne 'n radius van 10 km vanaf Allanridge Pk. (Voertuig gestasioneer te word te taxistaanplek te Allanridge.)

OP560—WELKOM. (2) Dingane Saul Marumo, Welkom; additional vehicle with new authority. (3) One combi to be acquired (8 passengers). (4) Black taxi passengers and their personal effects. (5) Within a radius of 15 km from Dagbreek Post Office, Welkom. (Vehicle will be stationed and operated from Dagbreek Post Office, Pretorius Street, Welkom.)

OP562—ONDENDAALSRUS / POTCHEFSTROOM / KLERKSDORP / VIRGINIA. (2) Western Greyhound Bus Lines (Pty) Ltd, Klerksdorp; replacement of vehicle. (3) One trailer—DDC 803T (1 035 kg). (4) and (5) To obtain the same authority as held by vehicle to be replaced.

OP430—WELKOM. (2) Jacob Kobokholo, Welkom; nuwe aansoek. (3) Een kombi om aangekoop te word (8 passasiers). (4) Swart taxipassasiers en hul persoonlike bagasie. (5) Vanaf Welkom HPK na punte geleë binne 'n radius van 10 km vanaf Welkom HPK en terug. (Voertuig gestasioneer te word te Welkom HPK.)

OP540—LICHTENBURG. (2) M. J. Nel en J. F. Nel, wat handel dryf as Ben Nel Transport, Lichtenburg; vervanging van voertuig. (3) Een leunwa—CMK 285T (22 180 kg) (4 en 5) Om dieselfde magtiging te verkry soos gehou deur voertuig vervang staan te word.

OP558—KLERKSDORP. (2) C. P. J. Duminy, Klerksdorp; vervanging van voertuig. (3) Een leunwa—BSX 821T (36 900 kg) (4 en 5). Om dieselfde magtiging te verkry soos gehou deur voertuig vervang staan te word.

OP544—WELKOM. (2) Stadsraad van Welkom, Welkom; vervanging van voertuig. (3) Een bus om aangekoop te word (18 passasiers) (4 en 5). Om dieselfde magtiging te verkry soos gehou deur voertuig vervang staan te word.

OP546—WELKOM. (2) Stadsraad van Welkom, Welkom, verhoging van tariewe. (3) Ses-en-veertig bestaande busse. (4) Swart passasiers en hulle persoonlike bagasie. (5) Oor/binne bestaande goedgekeurde roetes en tydtafels.

VOORGESTELDE TARIEWE MET BESTAANDE TARIEWE IN HAKKIES AANGETOON

STADSRAAD VAN WELKOM—BUSDIENS

BINNESTEDELIKE PASSASIERSVERVOERDIENS

(a) Swart passasiers en hul persoonlike bagasie:

Tarief

Thabong na Sakesentrum.

Volwassenes: (9c), 12c.
Kinders onder 12: (5c), 7c.

Thabong na St. Helena:

Volwassenes: (14c), 12c
Kinders onder 12: (7c), 7c

Thabong na Dagbreek:

Volwassenes. (9c), 12c.
Kinders onder 12: (7c), 7c.

Thabong na Rheederspark:

Volwassenes: (14c), 12c.
Kinders onder 12: (7c), 7c.

KONSESSIEKAARTE

Luukse busse *(Thabong na Sakesentrum)*:

Volwassenes: (15c), 20c.
Kinders onder 12: 12c.

Bronville na Industriëlegebied:

Volwassenes: (9c), 15c.
Kinders onder 12: (7c), 10c.

Bronville na Sakesentrum:

Volwassenes: (14c), 15c.
Kinders onder 12: (7c), 10c.

Bronville na St. Helena:

Volwassenes: (18c), 15c.
Kinders onder 12: (10c), 10c.

Skolsere—kwartaalkaarte: (R4,50), (R6).
Konsessiekaarte: (R1,05), R3,30.

OP545—WELKOM. (2) Stadsraad van Welkom, Welkom; verhoging van tariewe. (3) Negentien bestaande busse. (4) Blanke passasiers en hul persoonlike bagasie. (5) Oor/binne bestaande goedgekeurde roetes en tydtafels.

VOORGESTELDE TARIEWE MET BESTAANDE TARIEWE IN HAKKIES AANGETOON

STADSRAAD VAN WELKOM—BUSDIENS

A. BINNESTEDELIKE PASSASIERSVERVOERDIENS

Vervoer van Blanke passasiers en hul persoonlike bagasie:

Tarief

Kinders: (9c), 12c.
Volwassenes: (25c), 30c.

Riebeeckstad:

Kinders: (17c), 23c.
Volwassenes: (34c), 45c.

Kwartaalkaarte skoliere:

Welkom: (R6,75), R9.
Riebeeckstad: (R9), R12.
Plus 'n bedrag per kwartaal vir bykomende rite na sport: (R1,70), R2,20.
Duplikaatkwartaalkaarte: (R1,70), R2,30.

Kontanthaart:

Welkom/Riebeeckstad: (R2), R3,25.

DURBAN

Adres waarheen vertoë gerig moet word: Die Sekretaris, Plaaslike Padvervoerraad, Privaatsak X54307, Durban, 4000.

Address to which representations must be submitted: The Secretary, Local Road Transportation Board, Private Bag X54307, Durban, 4000.

AR/638 (661) B—WARNER BEACH. (2) Motor Assemblies Ltd, Isipingo Beach; replacement of m/bus—ND 306-109 (PP67588). (3) One m/bus—NUD 233-253. (4) White passengers and their personal effects. (5) From Warner Beach-Whitfield Park-Illovo Beach-Winifred-Prospecton. Departure 07h00. Prospecton-Winifred-Illovo Beach-Whitfield Park-Warner Beach. Departure 16h30.

AR/639 (607) B—DURBAN. (2) Herbert M. Shinga, Durban; replacement of s/wagon—ND 83770 (PP95649). (3) One bus—ND 174-934. (4) Black members of the Durban M. Dube Choir Association and their personal effects. (5) From S. J. Smith Hostel, Merebank, Durban, to points within a radius of 80 km therefrom and return.

AR/640 (631) B—EMPANGENI. (2) Wilson Sipho Mkhanazi, Empangeni; new public permit. (3) One bus to be acquired. (4) Non-White passengers and their personal effects. (5) From Empangeni Rank via Ubizo Store via Enseleni, Hlaza, Mzini, Nonqidi, Bizana to Sashuze and return.

Time-table

Mondays to Saturdays

Depart	*Arrive*	*Depart*	*Arrive*
04h00	06h30	09h00	09h30
10h30	12h00	12h30	14h00
14h30	16h00	16h15	19h45

Sundays and public holidays

Depart	*Arrive*
16h00	18h30

Scale of charges:

From Sabhuze to Empangeni: 90c.
From Sabhuze to Ubizo Store: 60c.
From Sabhuze to Enseleni: 50c.
From Sabhuze to Hlaza: 40c.
From Sabhuze to Mzini: 30c.

Children and scholars: Half price.

AR/641 (642) B—ROSSBURGH. (2) Dennis Eric Champ, Rossburgh; additional vehicle and amendment of authority. (3) Two combis—ND 59025 and ND 177-678. (4) White nursery school children. (5) Within a radius of 10 km from 14 Rockcliff Road, Rossburgh.

AR/642 (610) B—NUNGWANE RIVER/ISIPINGO. (2) Isaiah B. Sabelo, Umbumbulu; new public permit. (3) One bus—NC 5590—63 passengers. (4) Non-White passengers and their personal effects. (5) From Nungwane River Bus Terminus to Isipingo and return, via main Umbumbulu Road, Sawpits Store, Charles Sabelo High School, Enkanyiswani School and Chief Mapumulo's Kraal, subject to the condition that on the inward journey to Isipingo no passengers be picked up between Sawpits and Isipingo and on the outward journey from Isipingo no passengers be set down until Sawpits is reached.

Time-table

Nungwane River Depart	*Isipingo Arrival*	*Isipingo Depart*	*Nungwane River Arrival*
05h00	05h50	06h20	07h10
07h15	08h20	08h30	09h40
13h30	14h20	15h30	16h20
16h30	17h25	18h15	19h25

Scale of charges:

Nungwane to Sawpits: 10c.
Nungwane to Isipingo: 30c.
Children Nungwane to Sawpits: 5c.
Children Isipingo to Sawpits: 10c.

AR/643 (637) G—DURBAN. (2) G. M. S. Transport (Pty) Ltd, Jacobs; amendment of authority—change of associated companies. (3) Seven existing 25 ton vehicles to be advised. (4) Goods on behalf of wholly owned associated company Nampak Products Ltd. (5) Within a radius of 80 km from place of business at Stanger and within the Durban exempted area.

AR/644 (648) G—ISITHEBE/NELSPRUIT. (2) Grindrod Transport (Pty) Ltd, Jacobs; additional authority. (3) Three 25 ton existing trailers to be advised. (4) Silver lead anodes and return with scrap silver lead. (5) Between Isithebe and Nelspruit.

AR/645 (645) G—DURBAN. (2) Grondrod Transport (Pty) Ltd, Jacobs; amendment of authority—item 2 to exclude on behalf of Nova Board—item 4 to exclude on behalf of K. Herb and Co. (Pty) Ltd. (3) All existing vehicles. (4) and (5) As set out below:

1. Frozen fish and frozen vegetables (not tinned or bottled) and empty containers on return journeys. Within the Province of Natal.

2. Particle Board: Within (a) the Province of Natal; (b) a radius of 240 km from Durban General Post Office.

3. Baskets, bedsprings, benches, book racks, cabinets, clocks, clothes carriers, clothes racks, heaters, fans, ironing boards, household kiosks, kiss, knitting machines, household ladders, linoleum, lockers, paintings, pictures, room dividers (screens), sewing machines, speakers, household stands, household service trolleys, trays, vacuum cleaners, vegetable racks, radios and radiograms, barbecues, counters, refrigerators, grillers, stoves, washing machines, amplifiers, beach umbrellas, tape recorders, record players, electric kettles, toasters, glassware and porcelainware. Within a radius of 240 km from Durban General Post Office. Excluding imported traffic in international size metal containers.

4. Glassware: (a) Within the Province of Natal. (b) Between points within the Province of Natal and points situated within a radius of 480 km from Durban GPO as well as Johannesburg.

5. (a) Employees and their personal luggage whilst on duty only with the holder of this public permit provided that no charge is made for such conveyance. Within the Republic of South Africa.

(b) Own tools and spare parts for the bona fide repair, maintenance, erection or installation of electrical or mechanical machinery or equipment (the conveyance of spares to supplement stocks is prohibited). Within the Republic of South Africa.

IN LUMINE TUO VIDEBIMUS LUMEN
University of Fort Hare
Together in Excellence

6. Skin panels and motor body metal pressings not exceeding 1,25 mm gauge. From Durban to (i) Port Elizabeth; (ii) Cape Town.

7. Chilled and frozen meat in electrical operated refer containers. From Estcourt to Durban for export purposes.

AR/646 (638) G—RSA. (2) Grindrod Transport (Pty) Ltd, Jacobs; transfer of three Public Permits PP66509, PP66511, PP94489 from Richard's Bay Transport (Pty) Ltd. (3) Three semi-trailers—NT 12147, NT 12164, NT 18297. (4) and (5) As set out below:

NT 12147, NT 12164 and NT 18297

1. Own Non-White employees, free of charge: (a) Within the Magisterial District of Lower Umfolozi. (b) From Empageni to Richards Bay, Ngwelezana Black Reserve, Empangeni, Lower Umfolozi Dist ct and return

2. Road-making equipment and earthmoving machinery from one construction site direct to another. Within the Province of Natal.

3. (a) New or second-hand furniture; (b) transformers; (c) agricultural machinery and tools direct to farms for farming purposes; (d) battery charging plant, batteries and fluorescent fittings; (e) component parts of pre-fabricated buildings direct to assembly sites, asbestos and cement guttering, asbestos sheets, shop fittings and shop fronts, wooden windows, wooden doorframes, wooden beading and lattice work, picture railing, asbestos and wood fibre board, cove cornices, gutters and down pipes, porcelain and enamelled sanitary ware (baths, basins, cisterns and toilet pans excluded), terrazzo ware, earthen tiles, cement pipes, all direct to building sites; (f) display stands and scientific instruments. All within a radius of 240 km from Richards Bay General Post Office.

4. Baskets, bedsprings, benches, book racks, cabinets, clocks, clothes carriers, clothes racks, heaters, fans, ironing boards, household kiosks, kists, knitting machines, household ladders, linoleum in rolls, lockers, paintings, pictures, household floor polishers, room dividers (screens), sewing machines, speakers, household service trolleys, trays, vacuum cleaners, vegetable racks, radios and radiograms, soft goods such as upholstering materials, carpets, floor mats, curtains, cushions and other soft furnishings where such soft goods form part of other items specified herein or are intended for use and were originally sold together with other items specified herein and are conveyed simultaneously with such items, barbecues, counters, refrigerators, grillers, stoves, washing machines, amplifiers, beach umbrellas, tape recorders, record players, electric kettles, toasters, glassware and porcelainware. Within a radius of 480 km from Richards Bay Post Office and the Reef/Pretoria exempted area. Excluding imported traffic in international size metal containers.

5. Industrial electrical switchgear and industrial electrical switchboards, excluding cable and piping unless it forms part of the consignment of industrial electrical switchgear and industrial electrical switchboards being conveyed by the holder. Within a radius of 480 km from Richards Bay Post Office and the Reef/Pretoria exempted areas.

6. Spare parts only when required for immediate bona fide repair to broken down machinery or mechanical plant and not for installation of any new machinery or mechanical plant being erected/installed or to replenish stock. This authority does not cover the conveyance of any spare parts imported through any harbour and directly or indirectly transhipped after having been so imported. Within a radius of 480 km from Richards Bay Post Office and within the Reef/Pretoria exempted areas.

NT 12147 and NT 12164 only

Not more than 3 overhead fuel tanks with a maximum capacity of 4 000 litres each, as well as the relative stands therefor, direct to or from farms and construction sites. Within a radius of 160 km from Empangeni Post Office.

Rough unsawn timber, not sawn longitudinally. Within a radius of 50 km from Empangeni Post Office.

AR/647 (588) G—DURBAN/JOHANNESBURG. (2) Constantine Egbert Scott, Pietermaritzburg; new public permit. (3) One ton truck—NP 41726. (4) Disc brake pads, brake linings, clutch facings—friction materials. (5) Between Durban and Johannesburg.

AR/648 (633) G—DURBAN (2) Mariemuthoo Padayachee, Durban; new public permit. (3) One combi—ND 188-050. (4) Asiatic employees of Feathers and their personal effects. (5) From Phoenix to factory at 1125 Umgeni Road, Durban, and return.

AR/649 (641) G—DURBAN/JOHANNESBURG. (2) M. and D. Archery, trading as Cato Manor Cartage; new public permit. (3) Two semi-trailers—ND 98614 and ND 93418. (4) Shirts in thin boxes and skirts in special hanger packs. (5) Durban to Johannesburg.

AR/650 (709) T—MTUNZINI. (2) Mshiso Sibiya, Felixton; replacement of station-wagon NUF 13456 (PP96007). (3) One motor-car—NUF 9809. (4) Black passengers and their personal effects. (5) From Empangeni B.C. School situated in Black Reserve No. 10, Magisterial District of Mtunzine to points within a radius of 50 km therefrom and return.

AR/651 (625) G—NATAL. (2) Terra Tanks (Pty) Ltd, Durban; additional authority. (3) Two lorries—NPN 5198, NPN 44219. (4) Tools of trade, machinery and plant of which the holder or its affiliated company, Bay Plant Hire (Pty) Ltd, is the sole owner or hirer and which is used by the holder or Bay Plant Hire (Pty) Ltd or their employees in the course of their business as contractors and plant hirers. (5) (a) From their place of business situated at Pinetown direct to consturction sites. Within the Republic of South Africa. (b) From one construction site to another construction site. Within the Republic of South Africa. (c) From one construction site to the nearest railway station. (d) From a construction site to a depot or place of business situated at Pinetown, Natal.

AR/652 (636) G—NATAL. (2) Stewarts & Lloyds Trading (Pty) Ltd, Durban; replacement of ND 118-151 (PP94941). (3) One truck—ND 226-347. (4) and (5) As set out below:

All subsidiary companies of the Stewarts & Lloyds Group to undertake conveyance on behalf of each other in respect of items 1 to 10.

The companies concerned are:

1. Stewarts & Lloyds Trading (Pty) Ltd, Stewart Road, Maydon Wharf.

2. Stewarts & Lloyds Trading (Pty) Ltd, Empangeni Rail

3. Baldwins Steel (Pty) Ltd, Stewart Road, Maydon Wharf.

4 J. H. Vivian Company Limited, Stewart Road, Maydon Wharf.

5. H. Alers Hankey Natal (Pty) Ltd, Shepstone Place, Durban

(1) Goods, the property of customers, from any place which may be convenient to the owner of those goods, direct to the holder's premises as described in this permit, where such goods are to be cleaned, repaired, altered or similarly dealt with and thereafter from the latter place for return to any place where the owner of those goods wishes them to be delivered to him after they have been so dealt with. Within the Province of Natal.

(2) Employees and their personal luggage in the course of their employment provided no charge is made for such conveyance. Within the Province of Natal.

(3) Scaffolding, plant and tools of trade (no conveyance to be undertaken with a view to supplementing stocks). Within the Province of Natal.

(4) Material not exceeding 680 kg in weight per trip which is necessary for the execution of the word in respect of which the journey is undertaken, subject to the condition that any item so conveyed shall not be sold or offered for sale or delivered in pursuance of sale or delivered to supplement stocks. Any unused material which was conveyed in the forward journey may also be conveyed on the return journey. Within the Province of Natal.

(5) Spare parts only when required for immediate bona fide repairs to broken down machinery or mechanical plant and not for installation of any new machinery or mechanical plant being erected/installed or to replenish stocks. This authority does not cover the conveyance of spare parts imported through any harbour and directly or indirectly transhipped after having been so imported. Within the Province of Natal.

(6) Agricultural machinery and component parts and irrigation equipment and component parts, direct to farms for farming purposes. Within the Province of Natal.

(7) Water pumping plant and component parts, wind chargers, electric and gas lighting plant, battery charging machines and internal combustion engines direct to building and construction sites. Within the Province of Natal.

(8) Rigid P.V.C. sheeting, P.V.C. pipes and fittings, gutters and down pipes, fibre glass wrapped steel pipes, fibre glass wrapped steel fittings, roofing sheets and steel sections and steel plates direct to farms, building or construction sites. Within the Province of Natal.

(9) Asbestos and cement guttering, asbestos sheets, asbestos and fibre ceiling and partition boards (excluding glass fibre board), cove cornices, asbestos and wood fibre board, porcelain and enamelled toilet cisterns, porcelain sanitary ware and earthen pipes, shop fittings and shop fronts, wooden windows, wooden door frames, wooden trellis board, wooden frames, wooden beadings, lattice work and picture railings, terrazzo ware, earthen tiles, gutters and down pipes, direct to building and construction sites. Within the Province of Natal.

(10) Precast concrete tanks, asbestos washtroughs and fittings, asbestos cement water storage tanks and fittings, piping, accessories not exceeding 680 kg in weight and concrete wash troughs and fittings, direct to building and construction sites. Within the Province of Natal.

AR/653 (666) G—DURBAN/PORT ELIZABETH. (2) Vijayarangan Mudaly and Jayant Seebran, trading as Easy Moves, Durban, new public permit. (3) Two 25 ton vehicles to be advised. (4) Rubberising chemicals in drums. (5) From Durban to Port Elizabeth.

AR/654 (632) T—ESIKHAWINI. (2) Sherry Qwabe, Esikhawini; transfer of Public Permit PP96006 from Mandenkosi Dube. (3) One combi—NZ 465. (4) Black passengers and their personal effects. (5) Within a radius of 35 km from Zenzela Store and return.

AR/655 (643) G—RICHARDS BAY/DURBAN. (2) E. M. Unger (Pty) Ltd, Durban; additional vehicle. (3) One truck—ND 7385. (4) and (5) As set out below:

1. Provisions and stores for ocean-going vessels including food and vegetables, meats, canned goods, dairy products, liquor, cigarettes and all stores considered essential for operation of vessels. From Durban warehouse direct to ships in Richards Bay Harbour and return

2. Goods, all classes within a radius of 40 km from Alugana Alton, Richards Bay on behalf of Martin Rosholt and Co. (Pty) Ltd. From Warehouse in Durban to ships in Durban Harbour and to ships in Richards Bay Harbour via Empangeni and depot at Richards Bay awaiting ships and returned from ships and return.

AR/656 (676) G—NATAL. (2) Mtunzini Cartage (Pty) Ltd, Mtunzini; replacement of NZ 6318 (PP90988). (3) Truck—NZ 721. (4) and (5) As set out below.

1. (a) Railway and/or road-construction material from the nearest most suitable railway station, siding or R.M.T. bus halt where the necessary handling facilities are available, direct to the actual construction site and/or vice versa.

(b) Refuse. From the construction site to the dumping site.

(c) Bitumen. From the nearest mixing plant direct to the construction site.

(d) Plant and equipment. From one construction site to another in cases of emergency.

All within the Province of Natal.

2. Completely assembled units of road-making and excavation machinery in use direct to/from road-construction or excavation sites for bona fide road-construction or excavation purposes and not for sale. From points within a radius of 80 km from Mtunzini Post Office to points within a radius of 480 km from Mtunzini Post Office and return.

3. Goods, all classes. Within a radius of 50 km from Mtunzini Post Office.

4. Building material. Within a radius of 240 km from Mtunzini direct to building sites. Subject to the condition that no goods be picked up or set down on a route already served by the railways on a scheduled road transport service in respect of which public road carrier permits have been issued.

5. Asbestos and cement guttering, asbestos sheets, shop fittings and shop fronts, wooden windows, wooden door frames, wooden frames, wooden beading and lattice work, picture railings, asbestos and wood fibre board, cove cornices, gutters and down pipes, porcelain and enamelled sanitary ware (baths, basins, cisterns and toilet pans excluded), terrazzo ware, earthen pipes, earthen and roofing tiles. All direct to building sites within a radius of 240 km from holder's place of business as described in this public road carrier permit.

6. Fertilizer. Within a radius of 240 km from Mtunzini Post Office.

7. Agricultural machinery and implements direct to or from farms for farming purposes. Within a radius of 240 km from Mtunzini Post Office.

8. (a) Spare parts only when required for immediate bona fide repairs to broken down machinery or mechanical plant and not for installation or erection of any new machinery or mechanical plant being erected/installed or to replenish stocks. This authority does not cover the conveyance of spare parts imported through any harbour and directly or indirectly transhipped after having been so imported.

(b) Defective spare parts for immediate repairs and the same repaired parts for return after repairs for immediate fitment to plant and machinery which has broken down and which on account of urgency must be repaired expiditiously.

Both (a) and (b) within a radius of 240 km from Mtunzini Post Office.

9. Own weed killer and crop protection chemicals for immediate spraying on farms. Within a radius of 160 km from place of business at Mtunzini.

10. Own employees whilst on duty only, with the holder of this public road carrier permit, tools and spares required for the immediate repair and maintenance of own motor vehicles (not for replenishment of stocks). Within a radius of 240 km from place of business at Mtunzini.

11. Own oil for use in own motor vehicles. From place of business in Mtunzini to points within a radius of 240 km from place of business in Mtunzini.

AR/657 (686) G—NATAL. (2) Storm & Co. (Pty) Ltd, Durban; replacement of trailer ND 96217 (OP31602). (3) One trailer—ND 20928. (4) and (5) As set out below.

1. Own packing material and equipment for own use only and not to be sold or offered for sale. Within a radius of 480 km from Durban G.P.O.

2. Household air conditioners, baskets, bedside pedestals, bedsprings, benches, bookracks, cabinets, chairs, chest of drawers, clocks, clothes carriers, clothes racks, desks, dressing tables, headboards, heaters, fans, ironing boards, household kiosks, kists, kitchen cupboards and kitchen shelves and fitted kitchen sink units, knitting machines, household ladders, lamp shades, linoleum, lockers, mattresses, paintings, pictures, household floor polishers, prams, play pens, room dividers (screens), settees, sewing machines, speakers, household stands, tables, household service trolleys, trays, vacuum cleaners, vegetable racks, wardrobes, wendy houses, radios and radiograms, chandeliers. Within a radius of 480 km from Durban G.P.O. and within the Pretoria/Reef Exempted Areas. Excluding imported traffic in international size metal containers.

3. Barbecues, counters, refrigerators, grillers, pianos and organs, stoves, string and valve musical instruments, washing machines, amplifiers, beach umbrellas, dictaphones, tape recorders, record players, electric kettles, toasters, mirrors, glassware and porcelainware. From the Durban Cartage Area to points within a radius of 480 km therefrom and the Reef Exempted Area and return from aforementioned points to the Durban Cartage Area. Excluding imported traffic in international size metal containers.

4. Cash registers, typewriters, accounting machines, duplicating machines, dictaphones, counter scales and exhibition display stands, scientific instruments. (a) From the Durban Cartage Area to points within a radius of 240 km therefrom and return from the aforementioned points to the Durban Cartage Area. Excluding imported traffic in international size metal containers. (b) From the Durban Cartage Area to points within the Province of Natal and return from the aforementioned points to the Durban Cartage Area. Excluding imported traffic in international size metal containers.

5. Spare parts for urgent repairs to machinery or mechanical plant which has broken down and return of the same spare parts after repair—excluding delivery of such spare parts to any business premises to replenish stocks. Within the Province of Natal.

AR/658 (668) G—NATAL. (2) Jeremiah Mahlobo, Durban; new public permits. (3) One three ton truck to be acquired. (4) Demolished building material. (5) From point of demolition in Inanda Area to points within a radius of 240 km therefrom.

AR/659 (690) T—LAMONTVILLE. (2) Simon Mkize, Lamontville; new public permit. (3) One 8-seater motor-car to be acquired. (4) Non-White passengers and their personal effects. (5) From points within an area of 25 km from Lamontville Black Township and return.

AR/660 (634) T—ESIKHAWINI. (2) Banono Albert Ngobese, Esikhawini; new public permit. (3) One motor-car to be acquired. (4) Non-White passengers and their personal effects. (5) From Esikhawini Bantu Reserve to points within a radius of 50 km therefrom and return.

AR/661 (674) T—UMLAZI, DURBAN, PINETOWN. (2) Nkosingani Hezekia Makhanya, Isipingo Rail; new public permit, in place of Public Permit PP93615 not renewed for 1980/81. (3) One m/bus—NUL 349. (4) Black passengers and their personal effects. (5) Within the Magisterial Districts of Umlazi, Durban and Pinetown.

AR/662 (675) T—UMZINTO. (2) Alvinah Sabelo, Isipingo Rail; additional public permit; new authority. (3) One vehicle to be advised. (4) Non-White passengers and their personal effects. (5) Within a radius of 10 km from Turton Magistrate Court, Umzinto to points within a radius of 40 km therefrom and return.

AR/663 (681) T—UMFOLOZI. (2) Sipho James Gumede, Empangeni; transfer of PP95881 from Meshack Mthalane. (3) One motor-car—NUF 144-50. (4) Black passengers and their personal effects. (5) From points within a radius of 10 km from Mposa Railway Station, District of Lower Umfolozi to points within a radius of 50 km therefrom and return.

AR/664 (679) T—PORT SHEPSTONE. (2) Suresh Ragunath Sewbran, Port Shepstone; replacement of NPS 14172 (PP90309). (3) NPS 11890—motor-car. (4) Non-White passengers and their personal effects. (5) Within a radius of 50 km from Port Shepstone Post Office with casual trips.

AR/665 (499) T—DURBAN. (2) David Charles Kennedy, Roosburgh; new public permit in place of PP93688 not renewed for 1980/81. (3) One motor-car—ND 33089. (4) White passengers and their personal effects. (5) (i) Within a radius of 50 km from Durban, G.P.O. (ii) Casual trips.

AR/666 (680) T—PORT SHEPSTONE. (2) Dharamraju R. Soman, Port Shepstone; replacement of motor-car NPS 16614 (PP90193). (3) One motor-car—NPS 17162. (4) Non-White passengers and their personal effects. (5) (i) Within a radius of 50 km from Port Shepstone Post Office. (ii) Casual trips.

AR/667 (678) T—NTUZUMA. (2) Hagress Majola, Dalbridge; new public permit. (3) One 9-seater to be acquired. (4) Black passengers and their personal effects. (5) From points within E section, Ntuzuma Township to points within a radius of 50 km and return.

AR/668 (677) T—EMPANGENI. (2) Jeremiah Z. Mzimela, Empangeni; additional vehicle, additional authority. (3) One motor-car to be acquired. (4) Black passengers and their personal effects. (5) (i) From Empangeni Taxi Rank, District of Lower Umfolozi to points within a radius of 50 km therefrom and return. (ii) Casual trips.

AR/669 (687) T—DURBAN. (2) Browns Taxis, trading as Checker Taxis, Durban; replacement of motor-car—ND 35370 (PP95375). (3) One motor-car—ND 211-658. (4) White passengers and their personal effects. (5) (i) Within a radius of 50 km from Durban, G.P.O. (ii) Casual trips.

AR/670 (685) T—DURBAN. (2) Phyllis Rose Wagner, trading as Thompson's Taxi Service, Sparks Estate; replacement of motor-car—ND 263-599 (PP89566). (3) One motor-car—ND 233-643. (4) Non-White passengers and their personal effects. (5) Within a radius of 50 km from Durban, G.P.O. with casual trips.

AR/671 (653) T—REUNION. (2) Clement B. Njapa, Isipingo; replacement of motor-car NUL 421 (PP90830). (3) One m/bus—ND 236-913. (4) Non-White passengers and their personal effects. (5) Within a radius of 10 km from Reunion Railway Station excluding any conveyance within the Borough of Isipingo.

AR/672 (665) T—BETHLEHEM (2) M. Samson Jali, Botha's Hill; new public permit in place of PP91390 not renewed for 1980/81. (3) One motor-car—NPN 36940. (4) Non-White passengers and their personal effects. (5) Within a radius of 35 km from Bethlehem School Botha's Hill. Subject to the conditions that the vehicle is stationed at and operated from Bethlehem School, Botha's Hill.

AR/673 (662) T—UMLAZI. (2) Joseph Sibeko, Ntokozweni; replacement of vehicle NUZ 294 (PP95481). (3) One motor-car—NUZ 530. (4) Non-White passengers and their personal effects. (5) Within the Magisterial District of Umlazi and Umbumbulu.

AR/674 (657) T—CLERMONT. (2) Cyril N. Chonco, Clernaville; new public permit in place of PP91042 not renewed for 1980/81. (3) One s/wagon—NPN 22796. (4) Non-White passengers and their personal effects. (5) From Clermont Taxi Rank to points within a radius of 20 km from Clermont Post Office and return.

AR/675 (660) T—UMLAZI. (2) Nosizo Lemainah Makhanya, Umlazi; replacement of motor-car NUZ 6493 (PP66813). (3) One motor-car—NUZ 5935. (4) Black passengers and their personal effects. (5) From Umlazi Railway Station to points within the Umlazi Black Township.

AR/676 (559) T—ESIKHAWINI. (2) Nhliziyo Kaiphas Dlamini, Mtunzini; new public permit. (3) Vehicle to be acquired. (4) Black passengers and their personal effects. (5) From H Section, Shopping Centre, Esikhawini to points within a radius of 50 km and return.

AR/677 (583) T—MANDINI. (2) December Mzimela, Mandini; new public permit. (3) One motor-car to be acquired. (4) Black passengers and their personal effects. (5) From Enembe Trading Store Mandini to points within a radius of 50 km therefrom and return.

AR/678 (630) T—TONGAAT. (2) Natalu Suku Manilal, Tongaat; replacement of motor-car—NJ 16765 (PP95882). (3) One motor-car—NJ 3257. (4) Non-White passengers and their personal effects. (5) (i) Within a radius of 50 km from Tongaat Post Office. (ii) Casual trips.

AR/679 (654) T—UMLAZI. (2) Nelson Dlungele, Ntokozweni; replacement of motor-car—NUZ 6657 (PP95901). (3) One motor-car—NUZ 5511 (PP95901). (4) Black passengers and their personal effects. (5) Within the Magisterial District of Umlazi.

AR/680 (670) T—NTONJANENI. (2) Zilumusi Alfred Kumalo, Ntonjaneni; transfer of Public Permit PP94882 from Minah Mtetwa. (3) One mini-bus—NO 552. (4) Non-White passengers and their personal effects. (5) Within the Magisterial District of Ntonjaneni with casual trips.

AR/681 (684) B—PHOENIX. (2) Mangal Munilall, trading as Mount Edgecombe Bus Service; additional vehicle/additional authority. (3) Two vehicles to be acquired. (4) and (5) As set out below.

Route schedule

Non-White passengers and their personal effects From Phoenix Township to Durban, Centenary Road Bus Terminus and return.

Inwards: From Phoenix Township, intersection of Roads 802 and Road 803, along Road 803 into Road 903, along 903 into Spine Road (Phoenix Highway), along Spine Road into Industrial Road, along Industrial Road into Main Inanda Road, North Coast Road, Umgeni Road, Beatrice Street, Cross Street, Carlisle Street, Centenary Road, Market Road, Leopold Street, Warwick Avenue, to Centenary Road Bus Terminus and return.

Outwards: From Centenary Road Bus Terminus along Centenary Road, into and along Carlisle/Grey/Beatrice/Alber Streets, Umgeni Road, North Coast Road, Main Inanda Road, Industrial Road, Spine Road, Road 903, Road 803, to the intersection.

This authority is subject to restriction that on the inward journey no passengers be picked up after departing the last house at the intersection of Main Inanda Road and Industrial Road and on the return journey no passengers be set down before the said point is reached

Time-table

Phoenix Township Depart	*Durban* Depart
05h00	05h45
05h45	06h30
06h30	07h15
07h15	08h00
08h00	08h45
08h45	09h30
09h30	10h15
10h15	11h00
11h00	11h45
11h45	12h30
12h30	13h15
13h15	14h00
14h00	14h45
14h45	15h30
15h30	16h15
16h15	17h00
17h00	17h45
17h45	18h30
18h30	19h15
19h15	20h00

Fare scale: Phoenix Units 8 and 9 to Durban (Centenary Road Bus Terminus): 30c single.

AR/682 (639)—PINETOWN. (2) Intertown Passenger Service (Pty) Ltd; replacement of bus NPN 19508 (PP95383). (3) One bus—NPN 37121. (4) and (5) As set out below: Time-table/scale of charges as per replacement vehicle.

White passengers and their personal effects.

Routes:

1. (a) *Pinetown/Westville: Paradise Valley/Durban*: Between Durban and Pinetown via Pine Street, Cathedral Road, Russell Street, Smith Street—on inward journey via Cathedral Road, Grey Street, Commercial Road, Soldiers' Way, Pine Street, or via West Street and Field Street—Berea Road, Jan Smuts Highway, Cowie's Hill, Main Road (Pinetown), Glenugie Road, Scott Road, Crompton Street, Main Road (Pinetown), School Road, Chancery Lane, Forest Road, Mariannhill Road, Fourth Avenue, Retief Street, Fifth Avenue, Maritz Road, Lester Road, Stride Road, Jelliecoe Street, Blenheim Road with extension to Paradise Valley via Blenheim Road, Rushbrook Road, Limpus Road, Protea Road, Entabeni Road, Bullbrand Road—alternatively—via Stapleton Road, Underwood Road, Bartlett Road with a spur to Paradise Valley via Christian Road, Entabeni Road and Bullbrand Road.

(b) *Alternative route:* As per approved route between Pinetown and Durban up to Berea Road then via contra-flow bus lane along Berea Road, Smith Street and Alexandra Street, then back onto authorised route along West Street, Field Street and Pine Street.

Time-table: As per existing approved time-table with certain trips between 07h00 and 08h30 from Mondays to Fridays (inclusive) operated via the contra-flow bus lane.

Note.—In addition to the scheduled trips, additional trips may be operated as and when required.

2. (a) *Pinetown-Queensburgh-Durban*: Between Pinetown Civic Centre and Durban via Old Main Road, Stapleton, Underwood, Main, Stella, Fairlight Roads, Hyde Avenue, Dipdale, Bowker, Main, Sarnia, Umbilo, Berea Road, West Street, Field and Pine Streets or on inward journey as above to Sarnia Road and Umbilo then via Gale Street, Smith, Alexandra, West, Field and Pine Streets (i.e. Contra-flow bus lane), subject to the restrictions that on trips to Durban no passengers be picked up after the intersection of Harold Road and Sarnia Road and on trips from Durban no passengers be set down until after the intersection of Harold Road and Sarnia Road.

Note.—Journeys may also commence or terminate at Queensburgh.

(b) *Pinetown-Queensburgh*: Between Pinetown Civic Centre and Queensburgh via Old Main Road, Stapleton Road, Underwood Road, Main Road, Stella Road then via (a) Fairlight Road and Hyde Avenue; or (b) Beldon Drive and Ridley Park Road then along Dipdale Road, Bowker Road, Main Road, Underwood Road, Stapleton Road, Old Main Road to Civic Centre, Pinetown.

Time-table: Experimental: Subject to assessment of demand.

(c) *Queensburgh-Durban*: From Windmill Supply Store, Main Road, Queensburgh to Durban via Main Road (Cunningham Road, Jan Smuts Avenue, Pioneer Road, Link Road, Main Road, Stella Road, Fairlight Road, Becton Drive, Ridley Park Road, Dipdale Road, Bowker Road), Main Road, Sarnia Road, Umbilo Road, Berea Road, West Street, Field Street and Pine Street. Return via Alexandra Street, Smith Street, Gale Street, Umbilo Road, then as above. Subject to the restrictions that on trips to Durban no passengers be picked up after the intersection of Harold Road and Sarnia Road and on trips from Durban no passengers be set down until after the intersection of Harold Road and Sarnia Road.

Certain journeys to bypass section of route between Cunningham Road and Bowker Road and proceed direct along Main Road.

Note.—In addition to the scheduled trips, additional trips may be operated as and when required.

3. White passengers and their personal effects: Comprising scholars, students, wedding, funeral, religious, sports, picnics, hiking, camping and entertainment parties and other social gatherings from points within a radius of 40 km from Pinetown Post Office to points in the Province of Natal and return, subject to the condition that return journeys be commenced within 24 hours after completion of the relative forward journey (camping and picnic parties during week-ends and long-weekends excepted)

4. White organised parties of scholars, students, training college students, their instructors and teachers From points within the Province of Natal to points within the Province of Natal

AR/683 (689) B—NATAL. (2) Suid-Afrikaanse Spoorweë en Hawens, Durban; vervanging van voertuig MT 17647 (PP91122) (3) Een bus—MT 70193 (4) en (5) Soos uiteengesit.

ANNEXURE A

SOUTH AFRICAN RAILWAYS: NATAL SYSTEM

PASSENGERS

Between		*Via*	*Date introduced*
1. *Passengers.*			
Bizana	Port Shepstone	Gossville Mission	25/4/74
Clifton	Bredasfontein	De Bolanot	7/11/63
Donnybrook	Underberg	Direct	13/7/46
Dundee	Glencoe	Direct	10/7/50
Dundee	Berkhieside	Nqutu	5/7/26
Dundee	Greytown	Helpmekaar and Tugela Ferry	20/6/32
Dundee	Rorke's Drift	Direct	28/5/35
Dundee	Pomeroy	Washbank and Uitkoven	17/5/48

(Subject to the conditions that on the forward journey to Pomeroy no Non-White passengers be set down between Washbank and Dingly Dale and that on the return journey to Washbank no Non-White passengers be picked up between Dingly Dale and Washbank.)

Durban	Stanger	Old National Road	28/6/48
Durban	Pietermaritzburg	New National Road	1/6/54
Durban	Pietermaritzburg	Drummond, Sithumba and Manderston	1/6/54
Durban	Umgeni Dam	Rafner	5/12/50
Durban	Margate	Port Shepstone direct or via Nyoni Rocks and Kingsway	1/:2/54
*Durban	Kanyayo Store	Port Shepstone, Izingolweni and Bizana	7/6/73
Durban	Nongoma	Eshowe, Ulundi, Mahlabatini	10/9/76

(* Subject to the condition that on the forward journey to Kanyayo Store, no passengers be picked up at Ludeke Halt or any point thereafter, and that on the return journey no passengers be set down at Ludeke Halt or at any point before Ludeke Halt.)

Eshowe	Durban	New Tugela Bridge, Shakaskop, Umdloti, Umhlanga Rocks, Isyoni and Mandini Station	(17/10/60) (24/10/60) 6/11/62
Eshowe	Gelula	Mahlabatini, Mahlangani and Pongola	2/6/40
Eshowe	Mfakubeni	Nsumeni and Mbongolwane cutting	26/10/59
Kwabuti	Mahlabatini	Direct	28/7/67
Donnybrook-Kokstad on Fridays via Houstons Hope, Bramble Stores Bolburg Sandy Flats			17/6/77
*Flagstaff	Mkweleni	Holy Cross	23/9/32
Fort Louis	Ketazo	Nkandla	28/3/27
Izingolweni	Magusheni	Direct	1/6/29
*Kokstad	Umtata	Mount Aylliff, Tabenkulu, Mount Frere and Tsolo	2/12/29
*Kokstad	Port St Johns	Magusheni	1/2/27
Kokstad	Matatiele	Cedarville	23/8/48
Kokstad	Pietermaritzburg	Stafford's Post, Zonzabo, Umzimkulu and Richmond	23/8/48
Kokstad	Harding	Stafford's Post/Weza and Kentonview	25/9/50
Kokstad	Donnybrook	Riverside, Maienge, Franklin	25/9/48
Lower Lotsni	Bulwer	Umkomoasan River, Underberg	24/5/74
Ladysmith	National Park	Acton Homes, Greenpoint and Gelukstburg	1/7/74

(* Subject to the condition that after departure from Greenpoint no passenger be picked up or set down before Acton Homes is reached and after departure from Acton Homes No passengers are picked up or set down before Greenpoint is reached.)

Ladysmith	National Park	Dewdrop/Gelukstburg and Acton Homes/Bergville	6/10/27
Matatiele	Ongelukszuek	Queen's Mercy	5/6/40
*Matatiele	Mackeur	Mount Fletcher and Farview P.O.	1/8/38
Matatiele	Franklin	Cedarville, New Amalfi, Wensland Station, Swartberg Station and Houstons Hope Siding	
Mid Illovo	Pietermaritzburg	Camperdown	(27/6/49)
Mhlatuze	Nongoma	Richard's Bay, Naelwni, Empungeni, Mkwalini, Ulundi. Provided no intermediate passengers be picked up between Heatonville and Nkwalini	19/8/75
Mkuze	Jozini Dam	Nkonkoni	6/12/63
Mtubatuba	Nongoma	Hlabisa	3/12/38
Newcastle	Memel	Direct	6/10/27
Nqutu	Fort Louis	Silutshana	30/3/27
Park Ryate	New Foracett	Izopo, Donnybrook and Bulwer	13/3/46
Pietermaritzburg	Mkondeni	Direct	-/-/74
Pietermaritzburg	Greytown	Schroeders and Delton	30/8/48
Pietermaritzburg	Kranskop	Greytown and Ahrens Station	30/8/48
Pietermaritzburg	Harding	Izopo and Umzimkulu	21/7/41
Pietermaritzburg	Clan Syndicate (Nkayishana)	Albert Falls and Mpolweni	21/1/57
Pietermaritzburg	Howick	Sweetwaters	23/10/59
Pietermaritzburg	Netherby	Elandskop Station, Impendle, Clairvaux, Mxamala Court, Chief's Kraal	11/8/41
Pietermaritzburg	Himeville	Elandskop, Edgehill and Pevensey	13/7/46
*Port Shepstone	Redoubt	Margate or Izotsha and Port Edward	3/4/26
Port Shepstone	Harding	Marburg, Ridge Road, Hluku	(5/9/38) (21/4/65)

(* When Ridge Road and Hluku Road are impassable the road via Bizana and Doemount may be used, subject to the restriction that no passengers may be picked up or set down on the route between Bizana and Doemount.)

Between		*Via*	*Date introduced*
Port Shepstone	Paddock	Shelley Beach and Izotsha	24/11/47
Port Shepstone	Paddock	Shelley Beach and Izotsha	24/11/47
Springvale (Nhlavini)	Highflats	Direct	19/12/49
Thornville	Jozini	Beynesfield	10/7/50
*Umtata	Port St Johns	Libode	17/4/44
Vryheid	Eshowe	Babanango and Katazo	28/3/27
Vryheid	Eshowe	Gluckstadt, Dingaanstat and Ntonjaneni	21/4/28
Vryheid	Candover	Hlobane Station, Louwsberg, Magudu, Salvation and Fean	(30/3/27) (28/4/30)
		Hlobane No. 2 Colliery, Ntongolwane	(4/5/73)
Vryheid	Mahlabatini	Nhlazatshe, Diebekoppie and Tshelela	(7/6/48)
Vryheid	Eshowe	Babanango and Katazo	28/3/27
Wartburg Station	Mapumalange	Bruynshill, Sokesimbona, Table Mountain and Inchanga	16/3/73

Non-White passengers and their personal effects between Durban and Nkanyezini via Umlazi Road 7/12/71

*2. *Ancillary services:*

White and Non-White passengers from any railway station, siding or scene of accident to any other railway station, siding or scene of accident on the Natal Railway System provided that such White and Non-White passengers are loaded or off-loaded at a railway station, siding or scene of accident only 19/7/73

*3. *Linked road transport services:*

Conveyance of passengers and mail between points situated on any two or more connecting departmental road transport routes in respect of which motor carrier certificates are held by the Administration within the Provinces of Natal, East Griqualand and Transkei 19/12/55

4. *Railway employees*

Congella Yard (Maydon Road) ..... Administrative Offices ..... Direct 10/9/57

Employees of the Administration (rail rates applicable)

Pietermaritzburg ..... Mason's Mill ..... Direct 22/8/57

White and Non-White railway employees and their families and luggage

Own Non-White employees and convict labourers (free of charge) between place where they have been engaged at point and places of employment at Maydon Wharf and Salisbury Island in the harbour area and Bayhead 1/7/69

White and Non-White employees, employed by the S.A.R. and their dependants free of charge. Within a radius of 25 km from Empangeni Post Office, provided that no passengers be picked up and set down on recognised bus route 4/12/75

White passengers and their personal effects and tools of trade within a 25 km radius of Empangeni 22/4/76

Own employees and their dependants within a radius of 16 km from the G.P.O. at Vryheid 30/5/69

Own employees and their dependants within a radius of 16 km from G.P.O. at Stanger 14/7/70

Workmen in the course of the department's undertakings from Durban Station and Clairwood Station to New Pier, Island View and return via Rossburgh Station, Clairwood Station, Westworth Station and Pyanland Station

5. *Special trips and tours*

Conveyance of White and Non-White sports teams and other organised or special passenger trips (a) *over all approved routes (as per this Annexure, and between intermediate points thereon, as and when required, and also in connection with the cancellation of train services due to washaways, breakdown, etc.*, and (b) as under

Between		*Via*	*Nature of Transport*
Dundee	Ladysmith	Direct	Passengers
Dundee	Newcastle	Direct	Passengers
Dundee	Vryheid	Direct	Passengers
Durban	Stanger Beach	Direct	Passengers
Durban	Empangeni	Eshowe	Passengers
Durban	Kranskop	Stanger	Passengers
Durban	Umhlali Beach	Direct	Passengers
Durban	Environs	Direct	Passengers
Durban	Tweedie	Direct	Passengers
Durban	Pietermaritzburg Race Course	Direct	Passengers
Newcastle	Utrecht	Direct	Passengers
Newcastle	Incandu	Direct	Passengers
Pietermaritzburg	Greyville or Clairwood Race Course	Direct	Passengers
Pietermaritzburg	Environs	Direct	Passengers
Pietermaritzburg	Franklin	Direct	Passengers
Vryheid	Environs	Direct	Passengers
Vryheid	Paulpietersburg	Direct	Passengers

6. White and Non-White organised groups within 160 km from railway stations, sidings and road motor transport depots on the Natal Railway System 29/7/69

7. *Interchangeability of all vehicles in respect of routes and areas as authorised*

A. Approved, subject to the condition that no persons must be loaded or off-loaded in the Transkei, consisting of Bantu areas described in clause 2 of the Transkei Constitution of 1963 (Act 48 of 1963), as amended by proclamation from time to time

Secretary, Local Road Transportation Board:

* B. Approved for the loading and off-loading of persons in the Transkei, consisting of Bantu areas described in clause 2 of the Transkei Constitution of 1963 (Act 48 of 1963) as amended by proclamation from time to time

Secretary, Local Transportation Board, Umtata

IN LUMINE VIDEBIMUS
University of Fort Hare

AR/684 (576) T—KRANSKLOOF (2) Joseph M. Mahabi, Clermont, replacement of motor-car NPN 46571 (OP30580) (3) One motor-car—NPN 63850 (4) Black passengers and their personal effects (5) On trips from Kransklooof Hostel to points within a radius of 50 km therefrom and return

AR/685 (544) T—CLERMONT (2) Theo Mehlomakhulu, Clermont, new public permit in place of OP29870 not renewed for 1979/80/81 (3) One motor-car —NPN 29697 (4) Non-White passengers and their personal effects (5) Within a radius of 50 km from Clermont Township, Pinetown

AR/686 (532) B Re-gazette of AR/620—OVERPORT (2) A.S. and O. Bux, trading as Mayville Bus Co., Overport; additional buses/additional authority (3) Six vehicles to be advised (4) and (5) As set out below:

Route Schedule

Non-White passengers and their personal effects From Phoenix Township to Durban, Centenary Road Bus Terminus and return.

Inwards: From Phoenix Township, intersection of Road 802 and Road 803, along Road 803 into Road 903, along 903 into Spine Road (Phoenix Highway), along Spine Road into Industrial Road, along Industrial Road into Main Inanda Road, North Coast Road, Umgeni Road, Beatrice Street, Cross Street, Carlisle Street, Centenary Road, Market Road, Leopold Street, Warwick Avenue, to Centenary Road Bus Terminus and return

Outwards: From Centenary Road Bus Terminus along Centenary Road into and along Carlisle, Grey, Beatrice and Albert Streets, Umgeni Road, North Coast Road, Main Inanda Road, Industrial Road, Spine Road, Road 903, Road 803, to the intersection

This authority is subject to restriction that on the inward journey no passengers be picked up after departing the last house at the intersection of Main Inanda Road and Industrial Road and on the return journey no passengers be set down before the said point is reached

Time-table

Phoenix Township	*Durban*
Depart	*Depart*
05h00	05h45
05h45	06h30
06h30	07h15
07h15	08h00
08h00	08h45
08h45	09h30
09h30	10h15
10h15	11h00
11h00	11h45
11h45	12h30
12h30	13h15
13h15	14h00
14h00	14h45
14h45	15h30
15h30	16h15
16h15	17h00
17h00	17h45
17h45	18h30
18h30	19h15
19h15	20h00

Fare scale Phoenix Units 8 and 9 to Durban (Centenary Road Bus Terminus): 30c single

ROUTE SCHEDULE

Non-White passengers and their personal effects

From Mount Edgecombe and Phoenix Units 2, 3, and 5 to Phoenix Station and return

Inwards: From Mount Edgecombe Bus Terminus along Old North Coast Road to White House Service Station, back along Old North Coast, Spine Road, Road 202, Deleview Road, Stonebridge Drive, Parkmead Avenue, Glenton Road, Tower Road, Cardinal Road, Stone Bridge Drive, Spine Road, Road 501, Road 503, Spine Road to Phoenix Station and return Return journey reverse of above

Time-table

Depart Mount Edgecombe	*Depart Phoenix Station*
05h00	05h30
05h30	06h00
06h00	06h30
06h30	07h00
07h00	07h30
07h30	08h00
08h00	08h30
08h30	09h00
09h00	09h30
09h30	10h00
10h00	10h30
10h30	11h00
11h00	11h30
11h30	12h00
12h00	12h30
12h30	13h00
13h00	13h30
13h30	14h00
14h00	14h30
14h30	15h00
15h00	15h30
15h30	16h00
16h00	16h30
16h30	17h00
17h00	17h30
17h30	18h00
18h00	18h30
18h30	19h00
19h00	19h30
19h30	20h00

Scale of charges From Mount Edgecombe and Phoenix Units 2, 3, 4, and 5 to Phoenix Station, 10c single

AR/687 (656) B—DURBAN (2) Abdul Sather Bux and Osman Bux, trading as Mayville Bus Service; additional vehicle (3) Two vehicles to be acquired. (4) and (5) As set out below:

(a) Non-White passengers and their personal effects from Durban (Lorne Street Bus Rank) to:

(1) Mount Edgecombe Mill Barracks/Cambelltown/Westbrook Estate (Huletts Holding)

Outwards: Via Lorne, Carlisle, Grey, Beatrice and Albert Streets, Umgeni, North Coast Roads to terminal.

Inwards: Via above route to Umgeni Road, hence Beatrice, Grey and Carlisle Streets and Centenary Road to Lorne Street Bus Rank.

(2) S.O.S. Service Station via Avoca and return via:

Inwards: Lorne, Carlisle, Beatrice and Albert Streets, Umgeni, North Coast Roads to terminal

Outwards: From outer terminal via aforementioned route to Umgeni Road, hence via Beatrice, Grey and Carlisle Streets, Centenary Road to Lorne Street Bus Rank

(b) Non-White passengers and their personal effects: Non-White employees of Huletts Property Holdings From Cornubia and Umhlanga Rocks and return

(c) Conveyance of a party of Non-White scholars and students from educational institutions or Boy Scouts, Voortrekkers or members of any similar organisation, travelling together or attending a camp, picnic or other gathering or a party of Non-Whites visiting any place for the purpose of (i) attending any religious gathering or a wedding or a funeral; (ii) taking part in a picnic, concert or other form of amusement or; (iii) jointly taking part in or attending any competition or game. Within a radius of 80 km from Mount Edgecombe Post Office, provided that the same passengers conveyed on the forward journey be conveyed back on the return journey to the point of commencement and provided that no passengers be picked up or set down en route

(d) Non-White cinema goers, but only when a sufficient number offers: From Albert Street via Victoria, Grey and Beatrice Streets and thence to any outer terminus served by holder's buses

Time-table

Depart Mount Edgecombe	*Depart Durban*
*04h45 (S.O.S.)	*05h15
*04h50 (Mount Edgecombe)	*06h00
06h00	06h40
06h40	07h20
07h20	08h10
08h10	09h00
09h00	10h00
10h00	10h40
10h40	11h20
11h20	12h00
12h00	12h40
12h40	13h20
13h20	14h00
14h00	14h40
14h40	15h20
15h20	16h30
16h30	17h10
17h15	18h00
18h00	18h40
18h40	19h30
19h20	20h00

* Denotes except on Sundays and holidays

Time-table to be operated on communal basis by the Mount Edgecombe Bus Operators Association

University of Fort Hare
Together in Excellence

Depart S.O.S	*Depart Durban*
*06h20	*07h00
07h30	08h00
08h40	09h20
10h20	11h10
12h10	13h10
14h10	15h10
15h50	16h20
17h00	17h30
18h20	19h10

* Denotes except on Sundays and holidays

Time-table to be operated on communal basis by the Mount Edgecombe Bus Operators Association

Route schedule

Conveyance of Non-White passengers and their personal effects within the inner circle of Phoenix

(i) From Units 2, 3, 4 and 5 (situated in Phoenix Township) to Phoenix Station and to Mount Edgecombe Station along the Spine Road and vice versa along the prescribed bus routes

(ii) From Units 10 and 11 (situated in Phoenix Township) to Phoenix Station and to Mount Edgecombe Station along the Spine Road and vice versa along the prescribed routes. Subject to the prohibition laid down in regulation 70 (xxii) of the Motor Carrier Transportation Regulations, 1964, as amended, namely that passengers conveyed by the vehicle operating the feeder services for the trains at Phoenix and Mount Edgecombe Railway Stations, shall not be directly or indirectly trans-shipped to another motor vehicle for conveyance to Durban or to points between Mount Edgecombe and Durban.

The services are to be operated on communal time-tables between R. B. Bangoo, Springfield Omnibus Service (Pty) Ltd, M. Mushall, K. Sellamuthu, D. Hariparsadh

Time-table

Mount Edgecombe Station	*Unit 2*	*Unit 3*	*Unit 4*	*Unit 5*	*Phoenix Station*
05h00	05h15	05h30	05h45	06h00	06h15
06h30	06h45	07h00	07h15	07h30	07h45
08h00	08h20	08h40	09h00	09h20	09h40
10h00	10h30	11h00	11h30	12h00	12h30
13h00	13h30	14h00	14h30	15h00	15h30
16h00	16h20	16h40	17h00	17h20	17h40
18h00	18h20	18h40	19h00	19h20	19h40

Mount Edgecombe Station	*Unit 10*	*Unit 11*	*Phoenix Station*
05h00	05h30	05h45	06h00
06h15	06h45	07h00	07h15
08h00	08h30	08h45	09h00
09h30	10h00	10h30	11h00
11h30	12h00	12h30	13h00
13h30	14h00	14h30	15h00
15h30	16h00	16h30	16h45
17h00	17h30	17h45	18h00
18h15	18h45	19h00	19h15
19h30	19h45	20h00	

Additional trips may be operated as and when required in respect of shift and construction workers

Fare out

Durban to

Ballims Store: 15c
Red Hill Chemist: 20c
Avoca: 25c
S.O.S.: 25c
Westbrook: 35c
Campbelltown: 35c
Mount Edgecombe: 35c
Phoenix Unit 2/3: 35c
Phoenix Unit 4/5: 35c
Phoenix Unit 10/11: 35c
Intermediate fare: 15c

Fare in

Phoenix to S.O.S.: 15c
Phoenix to Avoca: 30c
Phoenix to Red Hill Chemist: 20c
Phoenix to Ballims Store: 30c
Phoenix to Durban: 35c
Intermediate fare: 15c

AR/688 692) T—PINETOWN/DURBAN (2) Kista Naidoo, Lotus Park; right element of motor-car ND 111-778 (PP95992). (3) One motor-car—ND 15-434. (4) Non-White passengers and their personal effects. (5) Within the Magisterial District of Pinetown and Durban. (Vehicle to be stationed at Rank 19, Merebank, and return.)

FLORA VAN SUIDELIKE AFRIKA

'n Taksonomiese behandeling van die flora van die Republiek van Suid-Afrika, Lesotho, Swaziland en Suidwes-Afrika. Sal bestaan uit 33 volumes, nie in numeriese volgorde nie.

Reeds beskikbaar:

Vol. 26 (1963): Prys R4,60. Buitelands R5,75, posvry.

Vol. 1 (1966): Prys R1,75. Buitelands R2,20, posvry.

Vol. 13 (1970): Prys R10. Buitelands R12, posvry.

Vol. 16 Deel 1 (1975): Prys R13,50. Buitelands R16,75, posvry.
Deel 2 (1977): Prys R16. Buitelands R20, posvry.

Vol. 22 (1976): Prys R8,60. Buitelands R10,75, posvry.

Vol. 9 (1978): Prys R4,25. Buitelands R5,30, posvry.

Verkrygbaar van die Direkteur, Afdeling Landbou-inligting, Privaatsak X144, Pretoria

Verkoopbelasting moet by binnelandse bestellings ingesluit word.

FLORA OF SOUTHERN AFRICA

A taxonomic treatment of the flora of the Republic of South Africa, Lesotho, Swaziland and South West Africa. To be completed in 33 volumes, not in numerical sequence.

Now available:

Vol. 26 (1963): Price R4,60. Other countries R5,75, post free.

Vol. 1 (1966): Price R1,75. Other countries R2,20, post free.

Vol. 13 (1970): Price R10. Other countries R12, post free.

Vol. 16 Part 1 (1975): Price R13,50. Other countries R16,75, post free.
Part 2 (1977): Price R16. Other countries R20, post free.

Vol. 22 (1976): Price R8,60. Other countries R10,75, post free.

Vol. 9 (1978): Price R4,25. Other countries R5,30, post free.

Obtainable from the Director, Division of Agricultural Information, Private Bag X144, Pretoria.

Sales tax must accompany inland orders.

University of Fort Hare
Together in Excellence

INHOUD

No.		Bladsy No.	Staatskoerant No.
Vervoer, Departement van			
Aansoeke om openbare padvervoerpermite		1	7201

CONTENTS

No.		Page No.	Gazette No.
Transport, Department of			
Applications for public road carrier permits		1	7201

Gedruk deur en verkrygbaar by die Staatsdrukker, Bosmanstraat, Privaatsak X85, Pretoria, 0001

Printed by and obtainable from the Government Printer, Bosman Street, Private Bag X85, Pretoria, 0001

7202

University of Fort Hare
Together in Excellence

STAATSKOERANT
VAN DIE REPUBLIEK VAN SUID-AFRIKA

REPUBLIC OF SOUTH AFRICA
GOVERNMENT GAZETTE

PRYS + 1c AVB 20c PRICE + 1c GST
As 'n Nuusblad by die Poskantoor Geregistreer BUITELANDS 30c ABROAD *Registered at the Post Office as a Newspaper*
POSVRY · POST FREE

Vol. 182] 1980 [No. 7202

ALGEMENE KENNISGEWINGS
(MAATSKAPPYE)

KENNISGEWING 597 VAN 1980

DEPARTEMENT VAN HANDEL EN VERBRUIKERSAKE

KENNISGEWINGS INGEVOLGE DIE MAATSKAPPYWET, 1973 (WET 61 VAN 1973)

Die volgende kennisgewings in verband met registrasies van maatskappye, omskeppings van maatskappye, naamsveranderinge, vertaalde en verkorte vorme van name, defensiewe name, verminderings van kapitaal, vermeerderings van kapitaal en ontbindings word vir algemene inligting bekendgemaak.

Geen waarborg ten opsigte van die juistheid van die besonderhede verstrek, word gegee nie en geen verantwoordelikheid vir foute en weglatings of die gevolge daarvan word aanvaar nie.

B. J. GELDENBLOEM, Registrateur van Maatskappye.

GENERAL NOTICES
(COMPANIES)

NOTICE 597 OF 1980

DEPARTMENT OF COMMERCE AND CONSUMER AFFAIRS

NOTICES IN TERMS OF THE COMPANIES ACT, 1973 (ACT 61 OF 1973)

The following notices relating to registrations of companies, conversions of companies, changes of name, translated and shortened forms of names, defensive names, reductions of capital, increase of capital and dissolutions are published for general information.

No guarantee is given as to the accuracy of the particulars furnished and no responsibility is taken for errors and omissions or their consequences.

B. J. GELDENBLOEM, Registrar of Companies.

REGISTRASIE VAN MAATSKAPPYE/REGISTRATION OF COMPANIES

Nuwe maatskappye/New companies

(Nommer, naam, adres, aandelekapitaal/Number, name, address, share capital.)

11 Augustus/August 1980

80/06981/07—KEITH A.S. LANSOM INVESTMENTS (PTY) LTD, c/o Richardson Reid & Partners, 11th Floor, Argon House, 87 Juta Street, Braamfontein, Johannesburg. R4 000. Investments.

80/06982/07—RAZIAS CAFÉ & PROVISIONS (PTY) LTD, Fourth Floor, A.E.L. Centre, 78 Mint Road, Fordsburg, Johannesburg: R4 000. Commerce. (General dealer.)

80/06983/07—JAMBONI ESTATES (PTY) LTD, Second Floor, Dunie Buildings, 138 Du Toit Street, Pretoria: R4 000. Agriculture. (Poultry.)

80/06984/07—PRINCESS PAULINE PRODUCTS (PTY) LTD, c/o C. Geyer & Co., 324 Sentrakor Buildings, 173 Pretorius Street, Pretoria. R4 000. Secondary. (Distributors.)

80/06985/07—STATION BOTTLE STORE PRETORIA (PTY) LTD, Sentrakorgebou 405, Pretoriusstraat 173, Pretoria: R4 000. Handel. (Drankwinkel.)

80/06986/07—INDUSTRIAL COMMODITIES (PTY) LTD, 601 BP Centre, 36 Kerk Street, Johannesburg. R4 000. Secondary. (Fertilizers.)

80/06987/07—C. C. GEORGE (PTY) LTD, 301 Stanhope Buildings, Main Road, Claremont: R4 000. Construction. (Secondary.)

80/06988/07—SSS SUIDKUS BELANGE (EDMS.) BPK., Stadsentrum 634, Pretoriusstraat 272, Pretoria. R4 000. Beleggings.

80/06989/07—PREMIER BOTTLE STORE (PTY) LTD, 283 Bree Street, Johannesburg. R4 000. Commerce. (Liquor.)

80/06990/07—ELJON CONSTRUCTION (PTY) LTD, 35 Banton Road, Robertsham, Johannesburg. R4 000. Secondary. (Construction.)

80/06991/07—SNIPPERCHICK (PTY) LTD, 1408 YPF Centre, Smal Street, Johannesburg. R4 000. Investments.

80/06992/07—CAROL ANSELL (PTY) LTD, c/o Kaplan & Kaplan, 176 Schoeman Street, Pretoria: R4 000. Commerce. (Pharmacy.)

80/06993/07—BRANLAR FINANCE (PTY) LTD, Second Floor, Standard Towers, 247 President Street, Germiston: R4 000. Finance.

80/06994/07—THE HIGHWAYS FOUR (PTY) LTD, Sixth Floor, Provincial Building Society Buildings, 98 Market Street, Johannesburg. R4 000. Investments.

80/06995/07—ATLANTIS MOSLEM BUTCHERY (PTY) LTD, 20 Grove Buildings, Grove Avenue, Claremont: R4 000. Commerce. (Butchery.)

80/06996/07—SUNSHINE VALLEY (PTY) LTD, 206 Benmore Gardens Shopping Centre, Benmore, Sandton: R4 000. Investments.

80/06997/07—VERDA (EDMS.) BPK., Vierde Laan 337, Capital Park, Pretoria. R1 000. Sekondêr. (Konstruksie.)

80/06998/07—MOWERAMA (PTY) LTD, c/o Powers & Co., Fifth Floor, Southern House, 29 Main Street, Port Elizabeth: R4 000. Commerce. (Lawnmower.)

80/06999/07—WEBSTER FAMILY HOLDINGS (PTY) LTD, c/o H. M. Parker, Checkers Centre, Jules Street, Malvern, Johannesburg: R3 000. Investments.

80/07000/07—MAGNOLIA LANDGOED (EDMS.) BPK., Swaanstraat 41, Lynn East, Pretoria: R100. Landbou. (Boerdery.)

80/07001/07—LOWVELD BOGANI STORE & CAFÉ (PTY) LTD, Fourth Floor, Prorom Buildings, Brown Street, Nelspruit: R100. Commerce. (General dealer.)

80/07002/07—STICK-A-BRICK (PTY) LTD, 29 Oxford Road, Forest Town, Johannesburg: R4 000. Secondary. (Tiles.)

80/07003/07—LEROY TRADING COMPANY (EDMS.) BPK., p/a Taylor & Geerling, Negende Verdieping, Homes Trustgebou, Foxstraat 108, Johannesburg. R10 000. Handel. (In- en uitvoer.)

80/07004/07—PROMAN CONSULTANTS (PTY) LTD, c/o J C Barnard, Jareka Buildings, 21 Merriman Avenue, Vereeniging R4 000 Investments

80/07005/07—C I R ENGINEERING (PTY) LTD, c/o Nicholson, Uys & Co, 104 A P I Centre, corner of President and George Streets Germiston R4 000 Secondary (Engineering)

80/07006/07—TRADE SET (PTY) LTD, Sixth Floor, Sterling House, 131 Pritchard Street, Johannesburg R4 000 Secondary (Printing)

80/07007/07—PRONTO PROPERTIES (PTY) LTD, Eighth Floor, Sanlam Sentrum, Jeppe Street, Johannesburg R4 000 Investments

80/07008/07—PRIMITIVE ART & ANTIQUITIES (PTY) LTD, 2 President Street, Germiston R4 000 Commerce (Antiquities)

80/07009/07—PLATO VERVOER (EDMS) BPK, Vanriebeeckstraat 34, Ermelo R4 000 Vervoer

80/07010/07—JOHAN BASSON (EDMS) BPK, Vanriebeeckstraat 34, Ermelo. R4 000 Sekondêr (Agente)

80/07011/07—THE SOUTH AFRICAN ACADEMY OF FAMILY PRACTICE/PRIMARY CARE (Association incorporated under Section 21), 1890 B.P. Centre, Thibault Square, Cape Town Services, Section 21

80/07012/07—H E D RUGS & INTERIORS (PTY) LTD, Third Floor, Omnia Sentrum, Frederick and Von Brandis Streets, Johannesburg R4 000 Commerce (Rugs)

80/07013/07—ERNITA'S (EDMS) BPK, Kamer 211, B & W-gebou, Vanrijnstraat, Vanderbijlpark. R4 000. Handel (Juweliersware)

80/07014/07—EFFORT S A (PTY) LTD, 114 Mons Road, Observatory, Johannesburg R4 000. Secondary (Machinery)

80/07015/07—AIR-O DISTRIBUTORS (PTY) LTD, 223 Homes Trust Buildings, 38 Wale Street, Cape Town R4 000 Secondary (Burglar alarms.)

80/07016/07—LAZARUS PROPERTY INVESTMENTS (PTY) LTD, Third Floor, Omnia Sentrum, Frederick and Von Brandis Streets, Johannesburg: R4 000 Investments

80/07017/07—GHOEMAS LANDGOED (EDMS.) BPK, Voortrekkerstraat 27, Kakamas. R10 000 Landbou (Boerdery)

12 Augustus/August 1980

80/07018/07—G & G SANDWERKE (EDMS) BPK, Plot 287, Muldersdrift. R4 000 Sekondêr (Kontrakteurswerk)

80/07019/07—WHITERIVER DEVELOPMENT (PTY) LTD, Tekwane Buildings, 12 Peter Graham Street, White River R4 000 Secondary. (Construction)

80/07020/07—NACHEL PRESICION ENGINEERING (PTY) LTD, 15 Anderson Street, Johannesburg R4 000 Secondary

80/07021/07—ANWES MOTORS (EDMS) BPK, Vierde Verdieping, Santamgebou, Aliwalstraat, Bloemfontein: R4 000 Handel (Motorhawe.)

80/07022/07—BADENHORST & DEANE (PTY) LTD, 221 Boland Bank Centre, Elizabeth Street, Welkom R120 Commerce (Pharmacy)

80/07023/07—MASCON KONSTRUKSIE (EDMS) BPK, Hartbeesstraat 5, Bethal: R5 000. Sekondêr (Kontrakteur.)

80/07024/07—ZEALOUS HOLDINGS (PTY) LTD, Main Reef Road, 11 New Era, Springs: R200 000 Investments.

80/07025/07—MANPARK (EDMS.) BPK, Stadsentrum 103, Kerkstraat 107, Potchefstroom: R4 000. Beleggings.

80/07026/07—KONDOTEL VAKANSIES (EDMS) BPK, Stadsentrum 103, Kerkstraat 107, Potchefstroom R4 000 Beleggings

80/07027/07—CATHNA BRAHMAN STOETERY (EDMS) BPK, Kamer 103, Stadsentrum, Kerkstraat 107, Potchefstroom: R4 000 Landbou (Boerdery.)

80/07028/07—CHESHIRE ENGINEERING (PTY) LTD, First Floor, Greenside Centre, Greenside R4 000 Secondary (Engineering)

80/07029/07—SCRAP METAL SHREDDING & PROCESSING (PTY) LTD, 23 Long Street, Kempton Park R4 000 Secondary (Scrap metals)

80/07030/07—ALLIED TRANSPORT (EDMS.) BPK, p a Ross & Vennote, Volkskassentrum 630, Vanderwaltstraat 230, Pretoria R4 000 Handel. (Vervoer.)

80/07031/07—CANES FILMS (PTY) LTD, 3 Stanley Avenue, Auckland Park: R4 000 Secondary (Television)

80/07032/07—BRONZE PARK (PTY) LTD, Seventh Floor, Southern Trident House, 58 Field Street, Durban R4 000 Investments

80/07033/07—DOUG MOYES (PTY) LTD, 15 St Matthew's Road, East London. R4 000 Services (Plumbers)

80/07034/07—SENSAN TRUST (EDMS) BPK, Eerste Verdieping, Trust Banksentrum, Eloffstraat 56, Johannesburg R100 Finance

80/07035/07—TRUST PROJECT FINANCE (PTY) LTD, Trust Banksentrum, Eloffstraat 56, Johannesburg R100 Secondary (Engineering)

80/07036/07—KELDER CRYSTAL (PTY) LTD, 29 Jesmond Grove, Overport: R100. Secondary (Glassware)

80/07037/07—LOU BAYHACK & ASSOCIATES (PTY) LTD, Seventh Floor, Elkam, Pretoria Street, Hillbrow, Johannesburg R4 000 Commerce. (Cosmetic products)

80/07038/07—AUCHMACOY ESTATES (PTY) LTD, 4 Cricket Street, Bloemfontein R4 000 Agricultural (Farming)

80/07039/07—MAIZAG FAMILY HOLDINGS (PTY) LTD, p a Horwath Schnaid Hurwitz & Partners, 19th Floor, North City, 51 Plein Street, Johannesburg. R5 000 Investments

80/07040/07—DOUGH MOYES PROPERTIES (PTY) LTD, 15 St Matthew's Road, East London R4 000 Investments

80/07041/07—BOSONBOW INVESTMENTS (PTY) LTD, 2803 Carlton Centre, Commissioner Street, Johannesburg R4 000 Finance

80/07042/07—INVOBUILD (PTY) LTD, Suite 203, Second Floor, North Wing Hyde Park, corner of Jan Smuts Avenue, Hyde Park, Sandton R4 000 Investments

80/07043/07—LARA'S MANUFACTURING COMPANY (PTY) LTD, Windsor House, Marine Drive, Margate R4 000 Secondary (Clothing)

80/07044/07—SPEED WEEL DELIVERIES (PTY) LTD, 180 Longmarket Street, Pietermaritzburg R4 000 Services (Delivery)

80/07045/07—COLDU PROPERTIES (PTY) LTD, 30th Floor, Durban Bay House, 333 Smith Street, Durban R4 000 Investments

80/07046/07—EAST RAND PLANT HIRE (PTY) LTD, c/o Moffat Thomson & Co, Second floor, Revelas Towers, corner of Cross and Queen Streets, Germiston R4 000 Second (Earthmoving equipment)

80/07047/07—BOOLSONS INVESTMENTS (PTY) LTD, 47 Market Street, Johannesburg R4 000 Investments

80/07048/07—BHORAT PROPERTIES (PTY) LTD, Shop 6, Athlone City Centre, Klipfontein Road, Athlone R4 000 Investments

80/07049/07—I H F INVESTMENTS (PTY) LTD, 1602 Bosman Buildings, 99 Eloff Street, Johannesburg R4 000. Investments.

80/07050/07—BUILDERS PLANT HIRE (PTY) LTD, 20 Grove Buildings, Grove Street, Claremont. R4 000 Secondary. (Building equipment.)

80/07051/07—ENGINEERING & TECHNICAL FRANCHISES (PTY) LTD, First Floor, Greenside Centre, Greenside, Johannesburg: R4 000 Secondary (Engineering)

80/07052/07—LANDMAN BOERDERY THEUNISENS (EDMS) BPK., Constantia Huis, hoek van Bok- en Muizenstraat, Welkom R4 000 Landbou (Boerdery)

80/07053/07—GUSTAVUS W VAN HEERDEN (EDMS) BPK, Nieuwestraat 9, Potchefstroom R4 000 Beleggings.

80/07054/07—TARGET 4 M. (PTY) LTD, Fifth Floor, De Korte Buildings, 46 De Korte Street, Braamfontein, Johannesburg R4 000. Services (Agents)

80/07055/07—SASHCO (S A) (PTY) LTD, c/o Eliasov Wold & Partners, Fourth Floor, Ned Equity Insurance Centre, Eloff Street, North Johannesburg R100 000. Commerce (Imit export)

80/07056/07—RUDI BRANDT PROPERTY INVESTMENT COMPANY (PTY) LTD, c/o Brink Roos & Du Toit, Penmor Buildings, 1 Rissik Street, Johannesburg R4 000. Investments

80/07057/07—CEPÉ KONSULTANTE (EDMS.) BPK., Visagiestraat 32, Pretoria. R4 000. Dienste

80/07058/07—PRESS MACH INVESTMENTS (PTY) LTD, 35 Van Buuren Road, Bedfordview. R4 000 Investments

80/07059/07—BAZIL HORNER PROPERTIES (PTY) LTD, 101 Chapel Street, Pietermaritzburg R10 000. Beleggings.

80/07060/07—ALPHA & OMEGA EIENDOMME (EDMS) BPK, p/a Malan & Du Preez, Miemandegebou, Visagiestraat 32, Pretoria. R4 000 Dienste

80/07061/07—OFF SHORE DIAMOND RECOVERY (PTY) LTD, c/o Pollard & Lewin, Sixth Floor, Shakespear House, corner of Commissioner and Joubert Streets, Johannesburg: R4 000 Mining.

80/07062/07—MOONFLOWER COMPANY (PTY) LTD, Sigma Park, Chrysler Way, Silverton, Pretoria: R100 Investments

80/07063/07—YELLOWSNAKE COMPANY (PTY) LTD, Sigma Park, Chrysler Way, Silverton, Pretoria: R100. Investments.

80/07064/07—BOACONSTRICTOR COMPANY (PTY) LTD, Sigma Park, Chrysler Way, Silverton, Pretoria R100 Investments.

80/07065/07—DIAMONDBACK COMPANY (PTY) LTD, Sigma Park, Chrysler Way, Silverton, Pretoria R100. Investments.

80/07066/07—PORTULACA COMPANY (PTY) LTD, Sigma Park, Chrysler Way, Silverton, Pretoria R100 Investments

80/07067/07—VIOLIN COMPANY (PTY) LTD, Sigma Park, Chrysler Way, Silverton, Pretoria R100 Investments

80/07068/07—REGINALD COMPANY (PTY) LTD, Sigma Park, Chrysler Way, Silverton, Pretoria R100 Investments

80/07069/07—ANACONDA COMPANY (PTY) LTD, Sigma Park, Chrysler Way, Silverton, Pretoria R100 Investments

80/07070/07—RANUNCULA COMPANY (PTY) LTD, Sigma Park, Chrysler Way, Silverton, Pretoria R100 Investments.

80/07071/07—BUTTERCUP COMPANY (PTY) LTD, Sigma Park, Chrysler Way, Silverton, Pretoria R100 Investments

80/07072/07—STRELITZIA COMPANY (PTY) LTD, Sigma Park, Chrysler Way, Silverton, Pretoria R100 Investments

80/07073/07—TROMBONE COMPANY (PTY) LTD, Sigma Park, Chrysler Way, Silverton, Pretoria R100 Investments

80/07074/07—BLOEMBOARD NOMINEES (PTY) LTD, 149 St Andrew Street, Bloemfontein R4 000 Services (Agents)

80/07075/07—PORTION 6 OF LOT 659 PARKTOWN (PTY) LTD, First Floor, Century Insurance Buildings, corner of Market and Kruis Streets, Johannesburg R4 000 Investments

80/07076/07—MAYACO (PTY) LTD, 16th Floor, The Strand Tower, 66 Strand Street, Cape Town R4 000 Commerce (Import and export)

80/07077/07—OPLINTER ADVERTISING (PTY) LTD, 500 Locarno House, 20 Loveday Street, Johannesburg R4 000 Secondary (Advertising)

80/07078/07—TILLY'S FASHIONS (PTY) LTD, c/o Karlin Isaacs Wolpert & Co, 901 Ninth Floor, Mobil House, Extension 90 Loveday Street, Johannesburg R4 000 Commerce (Outfitters)

80/07079/07—PHOTRONICS (PTY) LTD, c/o Wessel Greef, 304 Ortac's Buildings, 16 Darling Street, Port Elizabeth R4 000 Secondary (Photographic equipment.)

80/07080/07—KOTWEB PLANT HIRE (PTY) LTD, Plot 7, corner of Top and Main Roads, Boksburg North. R4 000 Secondary (Engineering equipment.)

80/07081/07—ALBRETT INVESTMENTS, Second Floor, Greenmarket Place, 54 Shortmarket Street, Cape Town: R4 000. Investments

80/07082/07—J.S SFELEY HOLDINGS (PTY) LTD, Third Floor, Heilet House, corner of Leeuwpoort and Bank Streets, Boksburg: R4 000 Investments

13 Augustus/August 1980

80/07083/07—ST LUKES HOSPICE (Association incorporated under Section 21), c/o McDowell, Caradoc, Davies & Co., Fourth Floor, Mobil House, Hans Strijdom Avenue, Cape Town: Services, Section 21

80/07084/07—BONUS BOUDIENSTE (EDMS.) BPK., Pretoriusstraat 136, Pretoria: R4 000 Handel. (Algemene handelaar.)

80/07085/07—TRANTMEL INVESTMENTS (PTY) LTD, Sixth Floor, St George's Centre, 13 Hout Street, Cape Town: R4 000 Investment

80/07086/07—N.P IMPORT-EXPORT (PTY) LTD, c/o George Cambanis & Co., Seventh Floor, Plein Centre, 100 Plein Street, Johannesburg: R4 000 Commerce (Import and export.)

80/07087/07—N F R & C PROPERTIES (PTY) LTD, 10th Floor, SA Permanent Buildings, Meyer Street, Germiston: R4 000. Investments

80/07088/07—PRICE AIDS (PTY) LTD, c/o H Eides, 3 Erridge Road, Parktown, Johannesburg: R4 000. Services. (Pricing catalogue.)

80/07089/07—DARGIC CRANE & EQUIPMENT SALES (PTY) LTD, Fourth Floor, Annuity House, 18 Rissik Street, Johannesburg R4 000 Secondary (Rebuild cranes.)

80/07090/07—LEXON CONSTRUCTION (PTY) LTD, 23 Scott Street, Waverley, Johannesburg: R4 000. Secondary. (Construction.)

80/07091/10—R.C W. ENTERPRISE S.A., 18th Floor, Life Centre, 45 Commissioner Street, Johannesburg: R25 000. External Co.: R25 000

80/07092/07—DE WITT & THEAL HARDWARE (PTY) LTD, Stuartstraat 40, Harrismith: R60 000. Handel. (Handelsware.)

80/07093/07—COLAZ (PTY) LTD, 139 Lanham Street, Bronkhorstspruit: R4 000. Services. (Panelbeaters.)

80/07094/07—ZEEKOEHOEK (EDMS.) BPK., Nedbank 501, Humanstraat, Krugersdorp: R200. Beleggings.

80/07095/07—RHENOSTERKOP FARMING INVESTMENTS (PTY) LTD, c/o Theron van der Poel, 333 Main Street, Paarl: R200 000 Investments

80/07096/07—CISKEI CITRUS MANAGERS (PTY) LTD, Protea Buildings, Alexandra Road, King William's Town: R10 000. Services (Supervice.)

80/07097/07—THE SOUTH AFRICAN NATIONAL ELECTRIC MANUFACTURING CO (PTY) LTD, c/o Theron van der Poel, Eighth Floor, Sanlam Sentrum, Jeppe Street, Johannesburg: R4 000. Secondary (Electrical equipment.)

80/07098/07—INNOVATIVE FASHIONS (PTY) LTD, 39 Richmond Road, Pinetown: R12 000 Secondary. (Clothing.)

80/07099/07—HAMLET WONINGS (EDMS.) BPK., p/a Hamlet Hotel, hoek van Voortrekker- en Kerkstraat, Prince Alfred Hamlet: R4 000 Beleggings.

80/07100—WIESE & MÖHLE (PTY) LTD, Second Floor, 25 Manitoba House, Third Street, Springs, Tvl: R4 000 Secondary.

80/07101/07—CRETOR ENGINEERING (PTY) LTD, 15th Floor, Nedbank East City, 120 End Street, Johannesburg: R4 000 Secondary (Engineering.)

80/07102/07—EDEN CITY PROPERTIES (PTY) LTD, c/o Pollard & Lewin, Sixth Floor, Shakespeare House, corner of Commissioner and Joubert Streets, Johannesburg: R2 000. Investments

80/07103/07—GRAHAM COHN PRODUCTS (PTY) LTD, c/o Gutkin, Fisher, Joffe & Co., 914 Maritime House, Loveday Street, Johannesburg: R4 000 Commerce. (Wholesalers.)

80/07104/07—ROAMER RAND PROPERTIES (PTY) LTD, 302 United House, Meyer Street, Germiston: R4 000 Investments

80/07105/07—WESSON COURT (PTY) LTD, Erven 632 and 640, Industrial Road, Ficksburg: R1 000 Secondary. (Construction.)

80/07106/07—CALEDON DIESEL CENTRE (PTY) LTD, Erven 632 and 640, Industrial Road, Ficksburg: R1 000 Secondary (Engineering.)

80/07107/07—BOUTIQUE BIBI (PTY) LTD, 13th Floor, The Strand Towers, Cape Town: R4 000. Commerce. (Clothing.)

80/07108/07—CAMBOARDS (PTY) LTD, 42 Eggo Jan Street, Oberholzer: R4 000 Secondary (Metals.)

80/07109/07—AHMEDIA HOLDINGS (PTY) LTD, 13th Floor, The Strand Towers, Cape Town. R4 000 Investments

80/07110/07—HEALTH WEALTH (PTY) LTD, c/o H Gordon & Co., Eighth Floor, Apollo Buildings, 405 Church Street, Pretoria R4 000 Secondary (Health products.)

80/07111/07—DELMAS EIENDOMME (EDMS.) BPK., Margaretstraat 27, Meredale: R1 000. Beleggings.

80/07112/07—MALOJA (EDMS.) BPK., p/a Du Plessis, Jordaan & Botha, Albatrosgebou, Joubertstraat 17, Vereeniging: R4 000 Handel (Algemene handelaars.)

80/07113/07—VARENNA (EDMS.) BPK., p/a Du Plessis, Jordaan & Botha, Albatrosgebou, Joubertstraat 17, Vereeniging: R4 000 Sekondêr (Konstruksie.)

80/07114/07—CABRIERE CONCORDE (EDMS.) BPK., p/a Van Noordwyk & Smit, Kortstraat 3, Paarl. R4 000 Landbou (Boerdery.)

80/07115/07—MERMAID POOLS (PTY) LTD, Alphen Centre 3 and 4 147 Mercury Road, Alphen Park, Benoni: R4 000. Secondary. (Pools.)

80/07116/07—DU CAP HOLDINGS (PTY) LTD, 8 Uitvlugt Buildings, Howard Drive, Pinelands, Cape R100 Investments

80/07117/07—MENDARINO (EDMS.) BPK., p/a Du Plessis, Jordaan & Botha, Albatrosgebou, Joubertstraat 17, Vereeniging. R4 000 Sekondêr (Konstruksie.)

80/07118/07—KAYLON OUTFITTERS (PTY) LTD, First Floor, Ruswyn Place, 75 Sandler Road, Highlands North, Johannesburg: R120 Secondary (Clothing.)

80/07119/07—EDHILL ENGINEERING (PTY) LTD, 401 Lippert House, 104 Pritchard Street, Johannesburg R4 000. Secondary (Engineering.)

80/07120/07—RANGEVIEW KONSTRUKSIE (PTY) LTD, Humarkgebou 231, Humanstraat, Krugersdorp R4 000 Sekondêr (Bou.)

14 Augustus/August 1980

80/07121/07—WYNN-BOU CONSTRUCTION (PTY) LTD, First Floor, A P.T Centre, corner of President and Gearge Streets, Germiston: R4 000 Secondary (b) (Construction.)

80/07122/07—INSTAND OUTBUILDINGS (PTY) LTD, First Floor, A P.T Centre, corner of President and George Streets, Germiston: R4 000 Commerce (Building equipment.)

80/07123/07—ALSTED MANUFACTURING & TOOL CO. (PTY) LTD, Sixth Floor, Samie Sentrum, corner of Spilsbury and Queen Streets, Germiston: R4 000 Secondary (Engineering.)

80/07124/07—ASBOU (EDMS.) BPK., Longstraat 23, Kempton Park: R4 000 Agente

80/07125/07—POBELÊ, Rontrustgebou 101, Skinnerstraat 159, Pretoria R4 000 Beleggings

80/07126/07—JIMCON (PTY) LTD, Z Cypress Road, Meyerton: R4 000 Beleggings

80/07127/07—NU-MOTTE (EDMS.) BPK., Stadsentrum 634, Pretoriusstraat 272, Pretoria: R4 000 Beleggings

80/07128/07—W L.K. BELEGGINGS (EDMS.) BPK., Steenstraat 27, Rustenburg R4 000 Beleggings.

80/07129/07—GARD RITE PROPERTIES (PTY) LTD, 1014 Rand Central, 165 Jeppe Street, Johannesburg. R4 000. Investments.

80/07130/07—JAMIKA (EDMS.) BPK., Agste Verdieping, Sanlamsentrum, Jeppestraat, Johannesburg R4 000 Handel. (Skrynwerker.)

80/07131/07—JURGENS BELEGGINGS (EDMS.) BPK., Tweede Verdieping, Quantorgebou, Wolfstraat, Kempton Park: R4 000. Beleggings

80/07132/07—S & L KNITWEAR (PTY) LTD, 214 Main Street, Johannesburg: R4 000 Secondary. (Manufacturing.)

80/07133/07—ARMIST & WIGLEY CASH & CARRY (PTY) LTD, c/o T Berndt & Co., First Floor, Southern Trident House, Terminus Street, East London: R4 000 Commerce. (Supermarket.)

80/07134/07—JAAME LIMITED, Sixth Floor, Ael Centre, 78 Mint Road, Fordsburg. R25 000 Services.

80/07135/07—SPRINGBOK MEAT (PTY) LTD, 102 President Buildings, President Street, Krugersdorp: R4 000. Commerce (Butchery.)

80/07136/07—GLADIOS INVESTMENTS (PTY) LTD, 102 President Buildings, President Street, Krugersdorp: R4 000. Finance.

80/07137/07—RIDCO BUILDERS (PTY) LTD, 1401 United Buildings, 291 Smith Street, Durban. R4 000 Secondary (Builders.)

80/07138/07—ARCHIVA (PTY) LTD, 300 North State, 99 Market Street, Johannesburg R200 Services (Storage.)

80/07139/07—INTERNATIONAL COMMODITY CONSULTANTS (PTY) LTD, 102 President Buildings, President Street, Krugersdorp: R4 000 Commerce (Export.)

80/07140/07—BAITZ & COOPERMAN INVESTMENTS (PTY) LTD, Third Floor, Durban Bay House, 333 Smith Street, Durban: R4 000 Investments

80/07141/07—VERRE-NOORD TRANSPORT (PTY) LTD, c/o C J. Geyer, 423 Sentrakor Buildings, Pretorius Street, Pretoria: R4 000 Services (Transport.)

80/07142/07—REINLOUETTE SKOENE (EDMS.) BPK., Eerste Verdieping, Koloniala Mutualgebou, Hoogstraat, Worcester: R4 000. Handel (Skoene.)

80/07143/07—TRITAP (PTY) LTD, 12 Rembrandt Plaza, Rembrandt Park, Johannesburg R20 000 Secondary (Insulation products.)

80/07144/07—CASEN ENGINEERING (PTY) LTD, Seventh Floor, Zambesi House, 44 Von Wielligh Street, Johannesburg: R4 000. Secondary (Engineering.)

80/07145/07—LAZAFAM (PTY) LTD, c/o Third Floor, Elkam, Pretoria Street, Hillbrow, Johannesburg: R4 000. Services

80/07146/07—CRISANWILL (EDMS.) BPK., Kerkstraat 87, Ermelo: R100 Beleggings

80/07147/07—RACHE (EDMS.) BPK., Volkskassentrum 925, Vanderwaltstraat 230, Pretoria R4 000 Beleggings

80/07148/07—PERSPIRACO BELEGGINGS (EDMS.) BPK., Boland Bankgebou 300, Meulplein, Stellenbosch: R4 000 Beleggings.

80/07149/07—BLACK'S GREAT AMERICAN CLOTHING CO. (PTY) LTD, Fifth Floor, Diamond Corner, 58 Eloff Street, Johannesburg. R4 000 Secondary (Clothing.)

80/07150/07—KEYPOINT SECURITY (PTY) LTD, 501 BP Centre, Thibault Square, Cape Town. R4 000. Services. (Consultants.)

80/07151/07—BARBOUR & THORN INSURANCE AGENTS (PTY) LTD, Second Floor, 318 Homes Trust Buildings, Mooi Street, Welkom. R120. Agents. (Services.)

80/07152/07—OSLEC SYRUPS (PTY) LTD, c/o M. S. Abrahams & Co., Eighth Floor, Zambesi House, 44 Von Wielligh Street, Johannesburg. R1 000. Secondary. (Cooldrinks.)

80/07153/07—SELDESO RIETKOL LANDGOED (EDMS.) BPK., Manitobahuis 25, Derde Straat, Springs. R4 000. Beleggings.

80/07154/07—BRUMIC (PTY) LTD, 501 Centenary Buildings, Bureau Lane, Pretoria: R4 000. Commerce. (Import and export.)

80/07155/07—LEKSTOP LOODGIETERS (EDMS.) BPK., Nedbanksentrum, Pretoriaweg 617, Silverton, Pretoria. R100. Dienste. (Loodgieters.)

80/07156/07—LOU PET (EDMS.) BPK., Western House, Boomstraat 39, Klerksdorp: R340. Beleggings.

80/07157/07—BRAEMER INVESTMENTS (PTY) LTD, Second Floor, Lindenberg Buildings, 2 Hodgson Street, Roodepoort. R4 000. Investments.

80/07158/07—MOONSHINE RECORDS (PTY) LTD, 194 Main Reef Road, Westgate, Johannesburg: R4 000. Secondary. (Records.)

80/07159/07—INSTITUTIONAL SERVICES (PTY) LTD, 700 Kelhof, 112 Pritchard Street, Johannesburg: R4 000. Secondary. (Medical equipment.)

80/07160/07—INTERSURGE (PTY) LTD, 700 Kelhof, 112 Pritchard Street, Johannesburg: R4 000. Commerce. (Medical suppliers.)

80/07161/07—EXACTILITY MACHINE MANUFACTURERS (PTY) LTD, J. S. Manitoba House, Third Street, Springs: R4 000. Secondary. (Machines.)

80/07162/07—JAY GEE CONSTRUCTION (PTY) LTD, c/o Burger & Buurman, 158 Voortrekker Street, Middelburg, Tvl. R100. Secondary. (Construction.)

15 Augustus/August 1980

80/07163/07—ARCHIE'S TRACTORS & IMPLEMENTS (1980) (PTY) LTD, Second Floor, Transport House, 12 Grace Street, Port Elizabeth: R4 000. Services. (Tractors.)

80/07164/07—INTERLAM WORKSHOP (PTY) LTD, First Floor, Elizabeth Street, Welkom: R100. Secondary. (Construction.)

80/07165/07—METROPOLITAN MERCHANDISING (PTY) LTD, First Floor, Ruswyn Place, 75 Sandler Road, Higlands North, Johannesburg: R200. Commerce. (General dealer.)

80/07166/07—BENDYK (EDMS.) BPK., Kantoorstraat 29a, Lydenburg: R100. Landbou. (Boerdery.)

80/07167/07—HERTI VLEIS (EDMS.) BPK., Curreystraat 11, Parkrand, Boksburg: R100. Handel. (Vleisfabriek.)

80/07168/07—VISIBLE IMPROVEMENTS (PTY) LTD, 2809 Carlton Centre, Johannesburg: R4 000. Secondary. (Construction.)

80/07169/07—HERTI EIENDOMME (EDMS.) BPK., Curreystraat 11, Parkrand, Boksburg: R100. Beleggings.

80/07170/07—DALSORA (PTY) LTD, 52/54 Moss Street, Verulam: R100. Investments.

80/07171/07—ASTRA CONSOLIDATED INSURANCE BROKERS (PTY) LTD, Seventh Floor, Switzerland House, Loveday Street, Johannesburg: R4 000. Finance.

80/07172/07—STALCOR (CAPE) (PTY) LTD, 114 De Villier Street, Kenilworth, Johannesburg: R4 000. Secondary. (Steel.)

80/07173/07—HENRY MEYER & ASSOCIATES (PTY) LTD, Fourth Floor, New Zealand Insurance House, 58 Anderson Street, Johannesburg. R4 000. Secondary. (Foot wear.)

80/07174/07—LERIDA (EDMS.) BPK., p/a Du Plessis, Jordaan & Botha, Albatrosgebou, Joubertstraat 17, Vereeniging. R4 000. Handel. (Algemene handelaars.)

80/07175/07—ROBWAT (PTY) LTD, Second Floor, Transport House, Grace Street, Port Elizabeth: R4 000. Commerce. (Wholesalers.)

80/07176/07—CON-TILE MACHINERY (PTY) LTD, 12th Floor, Ashley House, 320 Smith Street, Durban. R4 000. Secondary.

80/07177/07—SILVER NEEDLE (PTY) LTD, 746 City Centre, 272 Pretorius Street, Pretoria: R4 000. Commerce.

80/07178/07—T & M VERSPREIDERS (EDMS.) BPK., Vanerkomgebou 601, Pretoriusstraat 217, Pretoria. R100. Handel. (Motoronderdele.)

80/07179/07—MALMESBURY HANDELSENTRUM (EDMS.) BPK., A M Trustgebou, Kerkstraat 5, Malmesbury. R4 000. Beleggings.

80/07180/07—STAINLESS STEEL ENGINEERING (PTY) LTD, Eighth Floor, Wesbank House, 222 Smit Street, Braamfontein, Johannesburg. R4 000. Secondary. (Stainless steel.)

80/07181/07—GAPEX (PTY) LTD, Eighth Floor, Wesbank House, 222 Smit Street, Braamfontein, Johannesburg. R4 000. Commerce. (Importers.)

80/07182/07—CONLIN ENGINEERING (PTY) LTD, 12th Floor, Elkam Towers, 129 Pretoria Street, Hillbrow, Johannesburg. R4 000. Secondary. (Engineering.)

80/07183/07—CAPE GLO PETROLEUM PRODUCT DISTRIBUTORS (PTY) LTD, 101 Malta House, Malta Road, Salt River. R4 000. Secondary. (Petroleum.)

80/07184/07—BHAI SEEDAT (PTY) LTD, First Floor, Goodhope Centre, 92/96 Queen Street, Durban. R4 000. Secondary. (Leatherwear.)

80/07185/07—SOMA CORPORATION (PTY) LTD, 55 Minors Street, Yeoville, Johannesburg. R4 000. Secondary. (Manufacturers.)

80/07186/07—BOLAND CAR DEALERS (PTY) LTD, Seventh Floor, African Eagle Centre, 2 St George's Street, Cape Town. R4 000. Commerce. (Vehicles.)

80/07187/06—RAND LONDON EXPLORATION LTD, 26th Floor, Life Centre, 45 Commissioner Street, Johannesburg. R4 000. Mining.

80/07188/06—RAND LONDON MINERALS LTD, 26th Floor, Life Centre, Commissioner Street, Johannesburg. R4 000. Investments.

80/07189/07—INDEPENDENT ESTATES (PTY) LTD, Medical Centre, 72 Rabie Street, Fontainbleau. R4 000. Services. (Agents.)

80/07190/07—AIRO SPRAY (PTY) LTD, 2201 Trust Bank Centre, Heerengracht, Cape Town. R4 000. Commerce. (Spraying equipment.)

80/07191/07—SOUTHERN COMMODITIES (PTY) LTD, Fourth Floor, Burlington House, 22 Rissik Street, Johannesburg. R4 000. Commerce. (Commodities.)

80/07192/07—ROONIE INVESTMENTS (PTY) LTD, 301 Apsara Centre, 71 Victoria Street, Durban. R4 000. Investments.

80/07193/07—DALEVIEW TRADING (PTY) LTD, 301 Apsara Centre, 71 Victoria Street, Durban. R4 000. Commerce. (Retailers and wholesalers.)

80/07194/07—TRUNT INVESTMENTS (EDMS.) BPK., 301 Apsara Centre, 71 Victoria Street, Durban. R4 000. Investments.

80/07195/07—NATVAAL PROPERTIES (PTY) LTD, Fifth Floor, Surrey House, corner of Commissioner and Rissik Streets, Johannesburg. R4 000. Investments.

80/07196/07—JAN ACKERMAN (EDMS.) BPK., Third Floor, Olivetti Buildings, Blanckenberg Street, Bellville. R4 000. Handel. (Kantoortoerusting.)

80/07197/07—VESTA MEDICINES (PTY) LTD, Second Floor, Elkam, corner of Pretoria and Claim Streets, Hillbrow, Johannesburg. R4 000. Secondary. (Medicines.)

80/07198/07—KILL OR BE KILLED FILMS (PTY) LTD, 174 Main Street, Johannesburg. R4 000. Secondary. (Films.)

80/07199/07—E.P.L. KONSTRUKSIE (EDMS.) BPK., p/a Venter de Jager & Vennote, Plaza van Heerden 117, Vanveldenstraat, Brits. R4 000. Konstruksie.

80/07200/07—B.E.B. EIENDOMME (EDMS.) BPK., p/a Venter de Jager & Vennote, Plaza van Heerden 117, Vanveldenstraat, Brits. R4 000. Beleggings.

80/07201/07—HEATHILL AGENCIES (PTY) LTD, 17th Floor, Noswal Hall, 3 Stiemens Street, Johannesburg. R4 000. Services. (Agents.)

80/07202/07—AMSTERDAM BOERDERY (EDMS.) BPK., Alselaan 4, Odendaalsrus. R4 000. Landbou. (Boerdery.)

80/07203/07—C.I. PRINTERS (PTY) LTD, p/a Aboo, Kaloo & Co., Fourth Floor, AEL Centre, 78 Mint Road, Fordsburg, Johannesburg. R4 000. Secondary. (Printers.)

80/07204/07—SANCEL (PTY) LTD, Jareka Buildings, 21 Merriman Avenue, Vereeniging. R4 000. Secondary. (Pneumatics.)

80/07205/07—TRADE LINE (PTY) LTD, Second Floor, Standard Bank Chambers, 33 Troye Street, Johannesburg. R4 000. Commerce. (Import and export.)

80/07206/07—HIRE CONSULTANTS (PTY) LTD, Second Floor, Standard Bank Chambers, 33 Troye Street, Johannesburg. R4 000. Services.

80/07207/07—J. E. HAY & SON (PTY) LTD, Fourth Floor, Annuity House, 18 Rissik Street, Johannesburg. R4 000. Secondary. (Electrical.)

80/07208/07—GATEWAY TRADING (PTY) LTD, First Floor, Ruswyn Place, 75 Sandler Road, Highlands North, Johannesburg. R4 000. Commerce. (General dealer.)

80/07209/07—KOBUS NEL BELEGGINGS (EDMS.) BPK., Eerste Verdieping, Trust Bankgebou, Eadiestraat, Witbank. R4 000. Beleggings.

80/07210/07—AMERICAN ROLLER DISCO (PTY) LTD, Third Floor, Elkam, corner of Pretoria and Claim Streets, Hillbrow, Johannesburg. R4 000. Services. (Discotheque.)

80/07211/07—ZAGBAR FAMILY HOLDINGS (PTY) LTD, c/o Horwath Schnaid Hurwitz & Partners, 19th Floor, North City, 51 Plein Street, Johannesburg. R5 000. Investments.

80/07212/07—PRINCE FOOTWEAR (PTY) LTD, 1 Parklane, 12 Commercial Road, Pietermaritzburg. R70 000. Commerce. (Footwear.)

80/07213/07—RHODESIANA (PTY) LTD, c/o Alex Aiken & Carter, Allied Buildings, Oxford and Buxton Streets, East London. R4 000. Secondary. (Textiles.)

80/07214/07—L.P. LINENS (PTY) LTD, c/o Alex Aiken & Carter, Allied Buildings, Oxford and Buxton Streets, East London. R4 000. Secondary. (Linens manufacturers.)

80/07215/07—ASTRA PROPERTY HOLDINGS (PTY) LTD, 26 Russel Street, Durban. R4 000. Investments.

SPESIALE BESLUITE/SPECIAL RESOLUTIONS

Omskeppings/Conversions

(Naam van maatskappy, omskepping van wat na wat, datum van registrasie/Name of company, converted from what to what, date of registration.)

SUID KUNENE VISSERYE BPK., van publieke maatskappy na private maatskappy. 14/8/80.

McCARTHY FRD (PTY) LTD, from a private company into a public company. 13/8/80.

Naamsveranderings/Change of name

(Ou naam, nuwe naam, datum van registrasie van spesiale besluit/Old name, new name, date of registration of special resolution.)

Lichwes Bouers (Edms.) Bpk., MOTIBE (EDMS.) BPK.: 8/8/80
ASE Investments (Pty) Ltd, LEAH FINE (PTY) LTD: 8/8/80
M & R Hairstylists (Pty) Ltd, J & J HAIRSTYLISTS (PTY) LTD: 30/7/80
Motor Rewinds (Pty) Ltd, SWITCH-MECH (PTY) LTD: 7/8/80.
Die Burgerhuis Stellenbosch (Edms.) Bpk., DIE BURGERHUIS (EDMS.) BPK.. 7/8/80.
Omnibus Transport (Steel) (Pty) Ltd, EMADY (PTY) LTD: 7/8/80
Tarboom (Pty) Ltd, TRANSBOR (PTY) LTD: 7/8/80.
John B Clarke Motor Company (Pty) Ltd, McCARTHY DN: 7/8/80.
M.S.C. Engineering (Pty) Ltd, VAAL METAL WINDOWS (PTY) LTD: 7/8/80.
Murano Lighting (Pty) Ltd, SUNWEAVE (PTY) LTD: 7/8/80.
Harstanwal Investments (Pty) Ltd, LYNGRANT ESTATES (PTY) LTD: 7/8/80
Intelegente Beleggings (Edms) Bpk., PRO-AGRI (EDMS.) BPK.: 7/8/80.
Candair (Pty) Ltd, GEORGE CANDIOTES INCORPORATED: 5/8/80.
Jan Venter Motors (Edms.) Bpk., JOUBERT LOODGIETERSDIENSTE (EDMS) BPK.: 6/8/80.
African Batignolles Constructions (Pty) Ltd, AFRICAN CIVIL WORKS (PTY) LTD: 11/8/80.
Rontex (Pty) Ltd, K. J REINHEIMER INTERNATIONAL (PTY) LTD: 8/8/80
M G Olivier (Edms) Bpk., MANTERRA (PTY) LTD: 11/8/80
Rebunie Eiendomme (Edms.) Bpk., REBUNIE MOTORS (EDMS.) BPK . 11/8/80.
Kaefer Ferm Insulation (Pty) Ltd, KAEFER INSULATION (PTY) LTD 11/8/80
Kolsek (Edms) Bpk , P. W OELSCHLAEGER & PARTNERS (PTY) LTD: 11/8/80
Elgin Compost (Pty) Ltd, COMPACTS SYSTEMS (PTY) LTD: 11/8/80.
Refburg (Pty) Ltd, M M.B. LIQUOR INTERESTS (PTY) LTD: 11/8/80
Actuarial Financial Services (Pty) Ltd, PLANNED SAVINGS (PTY) LTD: 11/8/80
Suid-Holland Werkswinkels (Edms.) Bpk., HOTEL MAHWELERENG (EDMS.) BPK : 11/8/80.
Willomore Trustmaatskappy Bpk., SUID-AFRIKAANSE BOEDEL EN TRUST MAATSKAPPY BPK.. 11/8/80.
Robinhills Forty-Eight (Edms.) Bpk., SARUSAS BEHEREND (EDMS) BPK : 12/8/80.
Daan Retief Toere (Edms.) Bpk., DAAN RETIEF HANDELSUITGEWERY (EDMS) BPK.: 12/8/80.
Gulste (Pty) Ltd, MUNALI TRANSPORT (PTY) LTD: 12/8/80.
Marison Holdings (Pty) Ltd, MACOWIRE (PTY) LTD: 12/8/80.
Protea Gift Shop (Pty) Ltd, SARAD PUBLISHING COMPANY (PTY) LTD 12/8/80
Europair Fibreglas (Pty) Ltd, EUROPAIR FIBERGLAS (PTY) LTD: 12/8/80.
Extrol (Pty) Ltd, OPERATION NAUTILUS (PTY) LTD: 12/8/80.
Lastbyet (Pty) Ltd, PEOPLE PLUS (PTY) LTD: 12/8/80.
Pauls Transport (Pty) Ltd, HONEYDEW MOTORS (PTY) LTD: 12/8/80.
Econo Construction (Pty) Ltd, SIMROSS DECORATION (PTY) LTD: 14/8/80.
Challenger Alarm Franchises (Pty) Ltd, COLUMBIA HARDWARE (PTY) LTD 13/8/80
Auto Rectification Engineering (Pty) Ltd, S.A ELECTROLESS NICKEL PLATING COMPANY (PTY) LTD: 13/8/80.
Waterkloof Garage (Pty) Ltd, McCARTHY FRD (PTY) LTD: 13/8/80.
South Central Manufacturing (Pty) Ltd, SOUTH CENTRAL MANUFACTURERS (PTY) LTD 13/8/80
Intimate Cottages (Pty) Ltd, SUSSEX INVESTMENTS (PTY) LTD: 13/8/80.
Woolf Engineering Company Ltd, BUFFALO PROPERTIES LTD: 13/8/80.
Visionsigns (Pty) Ltd, BUFFALO RETAIL HOLDINGS (PTY) LTD: 13/8/80.
Tahaur Supermarket (Pty) Ltd, WALDENE ESTATE (PTY) LTD: 13/8/80.
Moflash South Africa (Pty) Ltd, LANDSCAPE SERVICES (PTY) LTD: 13/8/80
Hepburn & Chalmers Sportique (Pty) Ltd, CHALMERS SPORTIQUE (PTY) LTD 13/8/80
Aladin Re-Roofing (Pty) Ltd, J & C BUILDING SUPPLIES (PTY) LTD 13/8/80
Dave Copeland Construction (Pty) Ltd, DAVECOP INVESTMENTS (PTY) LTD 13/8/80
D Reynolds Hire (Cape) (Pty) Ltd, ZEUS PLANT HIRE (PTY) LTD: 13/8/80

Vertaalde name/Translated names

(Naam van maatskappy, vertaalde naam, datum van registrasie van naam/Name of company, translated name, date of registration of name)

Suid-Afrikaanse Boedel en Trust Maatskappy Bpk., SOUTH AFRICAN ESTATE AND TRUST CO LTD: 11/8/80

Verkorte name/Shortened names

(Naam van maatskappy, datum van registrasie/Name of company, date of registration.)

New era Life Insurance Co Ltd, NEW ERA LIFE: 8/8/80.
Die Trust Bank van Afrika Beperk, TRUST BANK: 11/8/80.

REGISTRASIE VAN DEFENSIEWE NAME/REGISTRATION OF DEFENSIVE NAMES

(Nommer, naam, adres, datum van registrasie/Number, name, address, date of registration.)

D80/1285—INDUSTRIAL TYRE COMPANY, c/o Calan Management Services (Pty) Ltd, P.O Box 52021, Saxonwold: 1/2/80
D80/1286—PLASTIFORM, c/o Calan Management Services (Pty) Ltd, P.O Box 52021, Saxonwold 1/2/80
D80/1287—NORTHERN MALT AND GRAIN, c/o Northern Malt and Grain, P.O Box 9519, Johannesburg. 14/8/80.
D80/1288—S A. FILM AND TV CENTRE, c/o Theatre Investments (Pty) Ltd, P.O. Box 1548, Johannesburg: 14/8/80.
D80/1289—VEDEORAMA, c/o Theatre Investments (Pty) Ltd, P.O. Box 1548, Johannesburg 14/8/80
D80/1290—CINE AFRIKA, c/o Theatre Investments (Pty) Ltd, P.O Box 1548, Johannesburg: 14/8/80.
D80/1291—DURBAN SPICE WORKS, c/o Durban Spice Works, P O Box 3748, Durban: 14/8/80
D80/1292—AUTOCHLOR, c/o Idaholme Trust (Pty) Ltd, P.O. Box 31051, Braamfontein: 14/8/80.
D80/1293—CONSOLIDATED AUTO COMPANY, c/o Associated Engineering (SA) Ltd, Private Bag 2, Parklands: 14/8/80.
D80/1294—ASSOCIATED ENGINEERING SALES, c/o Associate Engineering (SA) Limited, Private Bag 2, Parklands: 14/8/80.
D80/1295—ANTIFERENCE, c/o Bisset, Dean & Simpson, P.O Box 1000, Cape Town 14/8/80
D80/1296—SOUTH WEST AFRICAN GOLD COIN EXCHANGE, c/o Maatskappy-Nominees (Edms.) Bpk., Posbus 30, Windhoek: 14/8/80.
D80/1297—SOUTHERN CROSS STEEL, c/o Middelburg Steel and Alloys (Pty) Ltd, P.O. Box 781815, Sandton: 14/8/80.
D80/1298—PROSPECTION BREWERY, South African Breweries Ltd, c/o Adams & Adams, P.O. Box 1014, Pretoria: 14/8/80.
D80/1299—HOWE RICHARDSON SCALE (AFRICA), c/o Price Waterhouse, P.O Box 61039, Marshalltown: 14/8/80.
D80/1300—WESTINGHOUSE NUCLEAR POWER COMPANY (SOUTH AFRICA), c/o Price Waterhouse, P.O. Box 61039, Marshalltown: 14/8/80.
D80/1301—WESTINGHOUSE POWER SYSTEMS COMPANY (SOUTH AFRICA), c/o Price Waterhouse, P.O. Box 61039, Marshalltown: 14/8/80.
D80/1302—WESTINGHOUSE LIFT COMPANY (SOUTH AFRICA), c/o Price Waterhouse, P.O. Box 61039, Marshalltown: 14/8/80.
D80/1303—SATBEL MUSIEKOPNAME-ATELJEE, c/o Theatre Investments (Pty) Ltd, P.O Box 1548, Johannesburg: 14/8/80
D80/1304—SATBEL MUSIC RECORDING STUDIO, c/o Theatre Investments (Pty) Ltd, P.O. Box 1548, Johannesburg: 14/8/80.
D80/1305—WATERPROOFING ASSOCIATION SOUTH AFRICA, c/o Waterproofing Association S.A., P.O Box 1170, Edenvale: 14/8/80.
D80/1306—TIME MANAGEMENT CENTRE, c/o Martini & Bartman, P.O Box 32058, Braamfontein: 14/8/80.
D80/1307—SPARKLIT CHEMICALS, c/o J. Gnade, Suite 726, Frans du Toit Buildings, Schoeman Street, Pretoria: 14/8/80.
D80/1308—E.C.S.A., c/o Friedland Hart & Partners, P.O. Box 1003, Pretoria: 14/8/80.
D80/1309—S.O.C., c/o Friedland Hart & Partners, P.O. Box 1003, Pretoria: 14/8/80.
D80/1310—RENNIES TRAVEL (SECUNDA), c/o Rennies Shipping Holdings (Pty) Ltd, P.O Box 4281, Johannesburg: 14/8/80.
D80/1311—RENNIES TRAVEL (EAST RAND), c/o Rennies Shipping Holdings (Pty) Ltd, P.O. Box 4281, Johannesburg: 14/8/80.
D80/1312—PINLOK SYSTEMS, c/o Hartley Jensen, P.O. Box 841, Port Elizabeth: 14/8/80.
D80/1313—MILKYWAY DAIRY, c/o H. R. Malleson & I. A. Malleson, Hazeldean Farm, P O. Box 30, Silverton: 14/8/80.
D80/1314—FRYSTARK (CAPE), c/o Afcol Manufacturing Ltd, P.O. Box 63, Maitland: 14/8/80.
D80/1315—EXECUTIVE BUSINESS PRODUCTS, c/o Andrew Zygmunt Marek, P.O Box 428, Claremont: 14/8/80.
D80/1316—BRITISH TUTORIAL INSTITUTE, c/o Friedland Hart & Partners, P.O. Box 1003, Pretoria: 14/8/80.
D80/1317—BIRITSH INSTITUTE OF ENGINEERING TECHNOLOGY, c/o Friedland Hart & Partners, P.O. Box 1003, Pretoria: 14/8/80.
D80/1318—ALDERMASTON COLLEGE, c/o Friedland Hart & Partners, P.O Box 1003, Pretoria: 14/8/80
D80/1319—AMI (FREIGHT), Rennies Shipping Holdings (Pty) Ltd P.O Box 4281, Johannesburg 14/8/80

D80/1320—STOP-A-PUNCTURE, c/o Programmed Dealer Products (Pty) Ltd, P O Box 294, Pretoria. 14/8/80

D80/1321—TAXTAINER, c/o Mahon & Co , P O Box 256 Pretoria 14/8/80

D80/1322—CONTAINER TRADING CO , c/o Mahon & Co , P O Box 256, Pretoria 14/8/80

D80/1323—TRANS CONTAINER SERVICES, c/o Mahon & Co , P O Box 256, Pretoria: 14/8/80.

D80/1324—SHIRLSTAR CONTAINER TRANSPORT, c/o Mahon & Co , P.O Box 256, Pretoria. 14/8/80

D80/1325—BAIRD & TATLOCK (SA), E Merck SA (Pty) Ltd, c/o Adams & Adams, P O Box 1014, Pretoria 13/8/80

D80/1326—DINERS CARD, The Diners Club Inc , c/o Adams & Adams, P O Box 1014, Pretoria: 16/8/80

D80/1327—JOHN COTTON, John Cotton Ltd, c/o Adams & Adams, P.O Box 1014, Pretoria: 16/8/80

D80/1328—JOHN COTTON EDINBURGH, John Cotton Ltd, c/o Adams & Adams, P O Box 1014, Pretoria. 16/8/80

D80/1329—KENSITAS, Gallaher Ltd, c/o Adams & Adams, P.O Box 1014, Pretoria: 16/8/80

D80/1330—WAR HORSE, Gallaher Ltd, c/o Adams & Adams, P.O Box 1014, Pretoria 16/8/80

D80/1331—KINGS OWN, Gallaher Ltd, c/o Adams & Adams, P.O Box 1014, Pretoria: 16/8/80

D80/1332—SILK CUT, Gallaher Ltd, c/o Adams & Adams, P O Box 1014, Pretoria: 16/8/80.

D80/1333—KINGS FLAKE, Gallaher Ltd, c/o Adams & Adams, P.O. Box 1014, Pretoria: 16/8/80

D80/1334—MONTGOMERY WARD (SA), Montgomery Ward International Inc., c/o Adams & Adams, P O Box 1014, Pretoria: 16/8/80

D80/1335—CALENDARS PAR EXCELLENCE, William Hargreaves, c/o John Galgut & Co., P.O Box 633, Johannesburg: 14/8/80

D80/1336—S.A. POWER TOOL AND EQUIPMENT COMPANY, c/o S.A.P. Co. (Pty) Ltd, P.O Box 742, Kempton Park: 14/8/80

SPESIALE BESLUITE/SPECIAL RESOLUTIONS

Vermindering van kapitaal/Reduction of capital

(Naam van maatskappy, vermindering van kapitaal, datum van registrasie/Name of company, decrease of capital, date of registration)

H. J. DARLOW HOLDINGS (PTY) LTD, from R36 600 to R183. 12/8/80.

S & S BOERDERY (EDMS) BPK., from R60 000 to R600: 13/8/80.

S. C. VAN HARTEN (PTY) LTD, from R10 000 to R5 000: 13/8/80

L.M.R. INVESTMENTS (PTY) LTD, from R99 984 to nil: 14/8/80

ADBANK ENTERPRISES NAMIBIA (PTY) LTD, from R4 000 to R40: 14/8/80

FULMEN TELECOMMUCATIONS (PTY) LTD, from R40 000 to R1 500 000: 14/8/80.

TRITON LTD, from R384 859 to R345 534: 18/7/80.

NIDKOR LTD, from 4 000 000 shares of no par value to 3 785 500 shares of no par value: 18/7/80.

ALLANRIDGE CYCLE & MUSIC SALOON (PTY) LTD, from R2 000 to R200: 15/8/80.

WONDERWONINGS (GELVANDALE) (PTY) LTD, from R49 980 to nil: 14/8/80.

S.P O.T.T. (PTY) LTD, from R200 to R140: 15/8/80

Vermeerdering van kapitaal/Increase of capital

(Naam van maatskappy, datum van registrasie/Name of company, date of registration.)

NEW ERA LIFE INSURANCE COMPANY LTD, from R1 000 000 to R2 000 000: 8/8/80.

YEARGOOD INVESTMENTS (PTY) LTD, from R100 to R4 000: 8/8/80

STAR MEAT MARKET (PTY) LTD, from R1 000 to R20 000: 8/8/80

LICHWES BOUERS (EDMS) BPK , from R100 to R330: 8/8/80.

INDUSTRALEC (WELKOM) (PTY) LTD, from R100 to R40 000: 11/8/80

MIDLINK MANAGEMENT SERVICES (PTY) LTD, from R200 to R20 000: 11/8/80.

ELECTRO NETWORK (PTY) LTD, from R100 to R1 000: 12/8/80.

DISBAR (PTY) LTD, from R4 000 to R200 000: 12/8/80.

FERROCEMENTO (SOUTH AFRICA) (PTY) LTD, from R1 000 000 to R1 500 000: 12/8/80

RYALSAN ENGINEERING (PTY) LTD, from R4 000 to R12 000: 12/8/80.

SOUTH AFRICAN FLOMEPROOF EQUIPMENT (PTY) LTD, from R4 000 to R200 000 12/8/80.

FARMCOR (PTY) LTD, from R10 000 to R300 000: 12/8/80

UNION SPINNING MILLS (PTY) LTD, from R4 000 000 to R12 000 000: 12/8/80

H LE ROUX HOLDINGS (EDMS) BPK , from R75 100 to R77 000: 12/8/80.

WRISANT (EDMS.) BPK., from R100 to R100 000: 13/8/80

SHEMAN (PTY) LTD, from R4 000 to R4 200: 13/8/80.

A.S TRANSMISSIONS & STEERING (PTY) LTD, from R1 000 000 to R10 000 000: 13/8/80

COMPUTER FIELD MAINTENANCE CFM (SA) (PTY) LTD, from R4 000 to R100 000: 13/8/80

WEST WITWATERSRAND MINERAL AND MINING CORPORATION LTD, from R5 000 to R10 000

McNAMEE AND COMPANY LTD, from R500 000 to R510 000: 13/8/80.

W & B ASBESTOS COMPANY (PTY) LTD, from R150 000 to R420 000. 13/8/80

ARMSTRONG HYDRAULICS SOUTH AFRICA (PTY) LTD, from R100 000 to R500 000: 14/8/80

NIDKOR LTD, from 400 000 to 4 000 000 shares of no par value: 18/7/80

LISA ENTERPRISES (PTY) LTD, from R100 to R10 000 14/8/80

TELESHOPPER HOTLINE (PTY) LTD, from R208 000 to R312 000: 14/8/80.

CIRCLE FREIGHT INTERNATIONAL (S.A.) (PTY) LTD, from R4 000 to R300 000: 15/8/80.

CUMBERLAND INVESTMENTS (PTY) LTD, from R2 000 to R2 025. 15/8/80.

G. L. COUTURE (PTY) LTD, from R4 000 to R60 000: 15/8/80

NORLAND HOLDING COMPANY (PTY) LTD, from R4 000 to R100 000: 15/8/80.

METALIX (1959) (PTY) LTD, from R18 000 to R250 000: 15/8/80.

TRITON LTD, from R384 859 to R345 534: 18/8/80.

ONTBINDINGS/DISSOLUTIONS

Kennisgewing ingevolge artikel 419 (2) van die Maatskappywet, 1973 (No. 61 van 1973), van ontbinding van maatskappye/Notice in terms of section 419 (2) of the Companies Act, 1973 (No. 61 of 1973), of dissolution of companies.

68/1900—BARKHAN FINANCE COMPANY (PTY) LTD: 12/8/80.

UC16642—VILLAGE PREFABRICATED HOMES (PTY) LTD: 12/8/80.

UC20177—VALCOTE (PTY) LTD: 12/8/80.

UC35771—NATHAN SINDER TRUST (PTY) LTD: 12/8/80

52/1388—REY INVESTMENTS (PTY) LTD: 12/8/80.

64/1513—FIORE INVESTMENTS (PTY) LTD: 12/8/80.

65/3146—VAN ABRO INVESTMENTS (PTY) LTD: 12/8/80.

68/9143—ROSA RESIDENCES (PTY) LTD: 12/8/80.

68/13464—TROUW STREET PROPERTIES (PTY) LTD: 12/8/80

69/6921—ICE TIME PRODUCTIONS (PTY) LTD: 12/8/80.

N1350—H. J. STRANACK & CO. LTD: 13/8/80.

60/863—SHERSTAN (PTY) LTD: 13/8/80.

59/4749—J. W. DAVIES (PTY) LTD: 13/8/80.

51/659—McDONALDS PROPERTIES (PTY) LTD: 13/8/80.

68/9169—NECOL (PTY) LTD: 13/8/80.

51/2943—ANBACAR APARTMENTS (PTY) LTD: 13/8/80.

69/2592—ONDER DIE BERG (EDMS.) BPK.: 13/8/80.

71/3424—TOLLNAT (PTY) LTD: 13/8/80.

72/6376—MOOIBOS (EDMS) BPK.: 13/8/80

72/8381—CAR SHIPPING (PTY) LTD: 13/8/80.

72/13836—THREE NOUGHT SIX RANDPARKRIF (PTY) LTD: 13/8/80

74/550—RAMP PROPERTY INVESTMENTS (PTY) LTD: 13/8/80

75/3233—NEW ENTERPRISE SEWING & KNITTING MACHINE CO. (PTY) LTD: 13/8/80.

76/597—HUKO CONVEYORS (PTY) LTD: 13/8/80

76/1991—BENITZ (SANDTON) (PTY) LTD 13/8/80

77/1291—PETER HAUPT SALES ORGANISATION (PTY) LTD: 13/8/80.

68/9775—CHROME STYLE (EDMS) BPK.: 13/8/80.

UC37913—KAFFRARIAN PINERIES (PTY) LTD: 13/8/80.

76/1212—DRAKENSBERG TOERBUSSE (PTY) LTD: 13/8/80.

72/5641—LOT TWO FOUR SEVEN EIGHT WESTVILLE (PTY) LTD: 13/8/80

Ontbinding kragtens die Maatskappywet, No. 46 van 1926, soos gewysig/Dissolution in terms of the Companies Act, No. 46 of 1926, as amended

(Naam van maatskappy, datum van ontbinding/Name of company, date of dissolution.)

72/8876—FAMILY FUN (PTY) LTD: 12/8/80.

University of Pretoria
Tshwane Exclusive

KENNISGEWING 598 VAN 1980

DEREGISTRASIE VAN MAATSKAPPYE

Die Registrateur van Maatskappye maak—

(a) ooreenkomstig die bepalings van artikel 73 (5) van die Maatskappywet, 1973 (Wet 61 van 1973), bekend dat die name van die maatskappye in Lys A 1 hieronder genoem van die register van maatskappye geskrap is en die registrasie van hul aktes en statute gekanselleer is met ingang van die datum van publikasie van hierdie kennisgewing; en

(b) ooreenkomstig die bepalings van artikel 73 (3) van die Wet bekend dat na afloop van twee maande vanaf die publikasie van hierdie kennisgewing, die name van die maatskappye in Lys B hieronder genoem, van die register van maatskappye geskrap en hul aktes en statute gekanselleer sal word, tensy gronde daarteen aangevoer word:

NOTICE 598 OF 1980

DEREGISTRATION OF COMPANIES

The Registrar of Companies notifies—

(a) in terms of section 73 (5) of the Companies Act, 1973 (Act 61 of 1973), that the names of the companies mentioned in List A 1 below, have been struck off the register of companies and the registration of their memoranda and articles have been cancelled with effect from the date of publication of this notice; and

(b) in terms of section 73 (3) of the Act that at the expiration of two months from the date of publication of this notice, the names of the companies mentioned in List B below will, unless cause is shown to the contrary be struck off the register of companies and the registration of their memoranda and articles will be cancelled:

LYS/LIST A 1

29 Augustus/August 1980

A

63/5151—AIR-OMATIC (NATAL) (PTY) LTD, Durban: R6 000.
UC11438—AMELON CONSTRUCTION (PTY) LTD, Durban: R30 000.
75/947—ANGORA WYNBOERE (EDMS.) BPK., Robertson: R100.
71/2602—ANTHONIUS CONFECTIONERY (PTY) LTD, Durban: R200.
72/11451—ASHBLOUNT (PTY) LTD, Springs: R100.

B

69/6097—BAWNMORE INVESTMENTS (PTY) LTD, Johannesburg: R100.
69/5788—BERGZICHT BUILDERS (PTY) LTD, Cape Town: R1 000.
73/5874—BRIDGEFORM (PTY) LTD, Germiston: R100.

C

67/11744—C.M.J. GASKETS (PTY) LTD, Port Elizabeth: R100.
71/8004—CAM PENSFONTEIN MINING COMPANY (PTY) LTD, Johannesburg: R4 000.
56/1309—CENTRAL LIVESTOCK AGENCY (PTY) LTD, Johannesburg: R200.
63/7265—CLEEVEWOOD PARK (PTY) LTD, Durban: R100.
62/4750—CONNOISSEUR FISH CENTRE (PTY) LTD, Johannesburg: R600.
76/1379—COOLING COMBINATIONS (PTY) LTD, Cape Town: R500.

D

68/7258—DAIL INVESTMENTS (PTY) LTD, Johannesburg: R200.
64/4987—DERFLA INVESTMENTS (PTY) LTD, Cape Town: R200.
72/11539—DHARMESH INVESTMENTS (PTY) LTD, Durban: R4 000.
SWA 41/67—HANS DIE SKIPPER VISSERYE (EDMS.) BPK., Cape Town: R60 000.
65/12220—DOORSHAPES (PTY) LTD, Durban: R10 000.

E

72/1267—ELECTRO-RAND INSTALLATIONS (PTY) LTD, Johannesburg: R4 000.
75/1118—EPAM CONSTRUCTION (PTY) LTD, Johannesburg: R4 000.
72/12967—ERF FOUR FIVE SIX WYNBERG EXTENSION (PTY) LTD, Johannesburg: R4 000.
73/7774—ERF SEVEN EIGHT THREE ROBINDALE FIVE (PTY) LTD, Randburg: R4 000.
59/216—ERIKSEN BROTHERS (ZULULAND) (PTY) LTD, Durban: R20 000.

G

59/3889—GOOD MUSIC AFRICA (PTY) LTD, Johannesburg: R200.
73/3332—GOODWOOD CELLARS (PTY) LTD, Cape Town: R4 000.
72/7009—GRASSY PARK CONSTRUCTION COMPANY (PTY) LTD, Cape Town: R100.

H

68/11221—PIET HAASBROEK BELEGGINGS (EDMS.) BPK., Worcester: R200.
65/2725—HANGAR INVESTMENTS (PTY) LTD, Germiston: R200.
76/2071—HATFIELD SPORTGIMNASIUM (EDMS.) BPK., Pretoria: R100.
62/1783—HURWITZ WHOLESALERS (PTY) LTD, East London: R100 000.

J

52/625—JEBEL FASHIONS (PTY) LTD, East London: R2 000.
UC5201—JOHANNESBURG HOUSING UTILITY COMPANY, Johannesburg: Not for gain.
65/4412—JOHNSON ROSE AND COMPANY LTD, Johannesburg: R13 600.

K

UC3642—A. I. KHOTA (PTY) LTD, Krugersdorp: R200.
66/6696—KLAPWIJK CONSTRUCTION COMPANY (PTY) LTD, Mossel Bay: R5 000.

L

68/4794—LESLEY DRIVE INVESTMENTS (PTY) LTD, Durban: R100.

M

73/5624—MASTERS HYDRAULICS AND PNEUMATICS SOUTH AFRICA (PTY) LTD, Johannesburg: R4 000.
72/291—METAL POLISHING SERVICES (PTY) LTD, Cape Town: R4 000.
64/9525—METROPOLITAN PARKING ENTERPRISES (PTY) LTD, Johannesburg: R100.
67/9748—MODEL SHOPFITTERS AND JOINERS (PTY) LTD, Pretoria: R100.
72/332—MUROSE INVESTMENTS (PTY) LTD, Benoni: R4 000.

N

68/14720—NEROGRAM (PTY) LTD, Johannesburg: R20 000.
69/11778—NETTEX SALES (PTY) LTD, Bellville: R4 000.

O

56/2901—OVAROWNDE HOLDINGS (PTY) LTD, Cape Town: R2 000.

P

54/730—PAYEN GASKETS (PTY) LTD, Port Elizabeth: R200.
SWA1896—PELIKAAN SNOEK KORPORASIE (EDMS.) BPK., Kaapstad: R50 000.
70/1480—PHILADELPHIA FARMS DEVELOPMENT COMPANY (PTY) LTD, Bellville: R200.
75/2302—PLATBERG QUARRIES (EDMS.) BPK., Bloemfontein: R4 000.
69/14023—PLAYBACK INVESTMENTS (PTY) LTD, Durban: R4 000.
76/1285—PRIZE MANUFACTURERS (PTY) LTD, Pietermaritzburg: R100.

R

60/1715—R. V. W. BELEGGINGS (EDMS.) BPK., Kroonstad: R20 000.
70/8305—RABFREED INVESTMENTS (PTY) LTD, Pretoria: R300.
53/1695—RENNIES STEVEDORING (P.E.) (PTY) LTD, Johannesburg: R20 000.
53/1096—ROYAL WHOLESALERS (PTY) LTD, Durban: R4 000.

S

UC27407—SELECTED INDUSTRIAL DISTRIBUTORS (PTY) LTD, Pretoria: R70 000.
71/6683—SOLPACK (PTY) LTD, Durban: R4 000.
63/5111—STAND SEVENTY FIVE BUNSEN STREET (PTY) LTD, Johannesburg: R45 000.
65/847—ST. FRANCIS HOLDINGS (PTY) LTD, Cape Town: R100 000.
SWA1/67—SUIDERLIG VISSERYE BEPERK, Kaapstad: R200 000.

University of Pretoria
Together in Excellence

T

67/7954—TANGANDA TEA SALES (PTY) LTD, Johannesburg R200 000.
UC31612—TRU SEAL GASKETS (PTY) LTD Port Elizabeth R40 000

U

69/14085—UMHLATUSE SAND (EDMS.) BPK. Durban R100

V

80/3927—VEGEX-VENDA (PTY) LTD, Pretoria R185 900
67/6682—VIVA SAWMILLS (PTY) LTD, Germiston R1 000

W

UC12344—WOODHEAD-KEMPO SPRINGS (PTY) LTD, Johannesburg R200 000

LYS/LIST B

29 Augustus/August 1980

A

69/6521—A & D TECHNICAL DESIGN SERVICES (PTY) LTD, Durban: R1 000.
71/11767—AIS TRANSPORT (PTY) LTD, Brakpan R100
70/9830—A.M.T. (PTY) LTD, Cape Town R100
63/4464—AKMA FASHIONS MANUFACTURERS (PTY) LTD, Durban: R2 000.
64/2746—ALEXERTO INVESTMENTS (PTY) LTD, Johannesburg. R200.
75/3538—ALLEN AND ERASMUS (PTY) LTD, Germiston R4 000
UC11646—ANTI-DAZZLE LENS COMPANY (PTY) LTD, Johannesburg: R20 000
69/10281—ARENA RESTAURANT (PTY) LTD, Pretoria: R1 000
73/15172—ARMADILLO FOODS (S.A.) (PTY) LTD, Cape Town. R501.
67/4406—ATHLONE MOTORS (PTY) LTD, Cape Town: R1 000
52/2437—AVALON CHEMISTS (PTY) LTD, Cape Town: R2 000

B

67/5053—B.B. FUEL INSTALLATIONS (PTY) LTD, Durban: R200
69/16610—B AND C ERECTION (PTY) LTD, Vereeniging: R100
72/12597—BADEN-BADEN VAKANSIE OORD (EDMS.) BPK., Pretoria: R4 000
68/10849—BANDOLIERKOP KLIPBREKERS (EDMS.) BPK., Pietersburg: R4 000
64/5723—GRAHAM BECK (PTY) LTD, Johannesburg. R400 000
75/4568—L. BEDUSCHI'S PARAFFIN COMPRESS CENTRE (PTY) LTD, Johannesburg. R4 000
SWA275/69—BELANDA FISHING COMPANY (PTY) LTD, Windhoek: R100.
59/2069—J. WESSEL BELL EN SEUNS (EDMS.) BPK., Pretoria: R10 000.
51/3027—BERGZICHT INVESTMENTS (PTY) LTD, Cape Town: R20 000.
70/4453—BIKINI HOLIDAY FLATS (PTY) LTD, Durban R4 000
72/9309—BINDBYRNE INVESTMENTS (PTY) LTD, Pretoria: R200.
77/3313—BLACK LITTLE AGENTS (PTY) LTD, Cape Town. R4 000.
UC3481—BURLINGTON COURT (PTY) LTD, Durban: R20 000

C

72/4995—C.C.T. CONSTRUCTION (PTY) LTD, Durban: R200
73/4059—CANE-CUTTERS EQUIPMENT LTD, Durban: R10 000.
78/824—CARPET BROKERS (PTY) LTD, Johannesburg. R4 000.
UC24462—CELLOCRETE MANUFACTURING COMPANY (PTY) LTD, Durban: R10 000.
UC13876—CHESTER JONES AND DELFOS (PTY) LTD, Johannesburg: R555.
73/8224—CHRISTIANA APTEEK (EDMS.) BPK., Christiana: R100.
UC11195—CITY WHOLESALERS (PTY) LTD, Durban R17 700.
72/9583—COBINI ONDERNEMINGS (EDMS.) BPK., Bloemfontein R600.
UC11117, UC11119—COKOT INVESTMENTS (PTY) LTD, Johannesburg: R200.
T3299—COLONIAL BANK LTD, Johannesburg. R500 000.
C2983—COLUMBIA STEAM LAUNDRY (1926) LTD, Cape Town. R30 000.
76/420—COMMERCIAL FACTORY FARM (PTY) LTD, Johannesburg: R2 000.
63/5903—COMPACTA INVESTMENTS (PTY) LTD, Johannesburg: R200.
77/1859—CONFIDENCE FUNERAL SERVICES (PTY) LTD, Durban: R50 000.
72/9675—COWEY CENTRE (HOLDINGS) (PTY) LTD, Durban R500.
68/9990—CULTI (PTY) LTD, Cape Town: R1 000

D

76/1988—D.A.M. STATIONERS (PTY) LTD, Durban. R4 000
65/4041—D.K.J. (PTY) LTD, Johannesburg R200
66/10364—DATA PROCESSING FOR ACCOUNTANTS (PTY) LTD, Johannesburg: R40 000
60/2942—DAVREV INVESTMENTS (PTY) LTD, Durban: R200
UC16137—AMOD DAWOOD & COMPANY (PTY) LTD, Durban R30 000
70/8565—DEBOT AGENTSKAPPE (EDMS.) BPK., Pietersburg R100
62/3456—DEBUNARE INVESTMENTS (PTY) LTD, Roodepoort R200
68/8902—BILL DE KOCK (PTY) LTD, Pietersburg R100
73/356—DELMIX (SOUTH AFRICA) (PTY) LTD, Pretoria R4 000
73/9483—DEV-O-LAND LTD, Witkoppen R100 000
75/3558—DIAL-A-DINNER (PTY) LTD, Durban R4 000
UC39149—DIE POORT KONTANT WINKEL (EDMS.) BPK., Pretoria. R200
67/2661—DIGAM HOTELS (PTY) LTD, Johannesburg: R100.
54/1653—DIMATH MOTORS (PTY) LTD, Johannesburg: No gain
66/216—DOEL BELEGGINGS BPK., Pretoria R10 000
66/10167—DRAWING AND DESIGN SERVICES (PTY) LTD, Germiston R100
63/7395—DUNNOTTAR WHOLESALERS (PTY) LTD, Nigel: R100

E

73/16093—E.M.A.C. EXPLORATION (PTY) LTD, Johannesburg R4 000.
75/4497—ELLOX (PTY) LTD, Durban: R4 000
UC18402—EMPIRE IMPORT AND EXPORT HOUSE (PTY) LTD, Johannesburg R200
73/6232—ERF DRIEHONDERD EN TIEN (TZANEEN) (EDMS.) BPK., Pietersburg: R10
72/10239—ERF FOUR TWO TWO FOUR BRYANSTON EIGHTEEN (PTY) LTD, Johannesburg: R100
51/1750—ERICADENE ESTATE (PTY) LTD, Port Elizabeth R20 000
70/11495—ESMAC MODESALON (EDMS.) BPK., Paarl: R4 000
UC26090—EXCAVATORS (S.A.) (PTY) LTD, Johannesburg: R10 000

F

65/5746—F.M.S. (IXOPO) LTD, Durban R200.
73/701—FARNRIDGE PHARMACY (PTY) LTD, Durban R4 000
65/6853—FINE ART FASHIONS (PTY) LTD, Cape Town: R200
69/1532—FINESSE PRODUCTS (PTY) LTD, Durban R1 000.
72/4828—FILTER CONSTRUCTION CO. (PTY) LTD, Johannesburg. R7 000
68/11457—FRANCE PUBLICATIONS (PTY) LTD, Durban: R100
73/16758—DOIDGE FRASER (PTY) LTD, Pietermaritzburg: R100

G

UC17544—GENERAL CONSTRUCTION COMPANY (PTY) LTD, Johannesburg R20 000.
UC25116—GEOPHYSICAL SURVEYS (PTY) LTD, Johannesburg R40 600.
UC39742—GERMISTON DRIVE IN (PTY) LTD, Johannesburg. R20 000.
UC11597—GOFFRO LTD, Johannesburg: R6 000.
67/299—GOLDEN GLO INVESTMENTS (PTY) LTD, Johannesburg R40 000.
71/10143—GOLFING SAFARI (PTY) LTD, Durban. R4 000.
73/5858—GRASENDALE BOERDERY (EDMS.) BPK., Krugersdorp R4 000

H

70/989—HAPPINESS HOLDINGS (PTY) LTD, Johannesburg: R4 000.
78/5082—HARNET (PTY) LTD, Durban: R4 000.
UC11329—HATFIELD BUILDERS (PTY) LTD, Pretoria: R200
UC10139—HENKES AND COOPER FINANCE COMPANY (PTY) LTD, Johannesburg. R6 000.
75/3641—K.I. HOLDINGS (PTY) LTD, Germiston. R4 000

I

76/1365—IBBYS (EDMS.) BPK., Vryburg: R4 000
70/5690—INHIL PROPERTIES (PTY) LTD, Johannesburg: R4 000
UC33764—IRAN MID AFRICA (PTY) LTD, Johannesburg: R4 000

J

65/4779—J.K.N. FISHERIES (PTY) LTD, Port Elizabeth: R6 000
UC28462—J.M.S. PROPERTIES (PTY) LTD, Johannesburg: R200
60/4177—JAILANI CAFE (PTY) LTD, Durban: R4 000
63/4112—JAIS MOTORS (PTY) LTD, Durban: R2 000.

K

UC22640—K & R REAL ESTATES (PTY) LTD, Johannesburg: R2 000.

K

71/11454—KAMPVLUR BELEGGINGS (EDMS BPK., Pietersburg R200.
UC18279—A KATZ & CLARKE (PTY) LTD, Johannesburg R16 000.
64/9448—KHAIS BOERDERY (EDMS.) BPK., Kimberley R1 000.
68/14595—KORB & THEKWANE BEESTE (EDMS.) BPK., Pretoria R200.
73/4997—JOHANNES KOTZE KABINETMAKERS (EDMS.) BPK., Welkom R100.
54/1080—KRAMERS NOMINEES (PTY) LTD, Cape Town. R200.
73/67[illegible]—KRIMP CENTRE (NEW CASTLE) (PTY) LTD, Durban R4 [illegible].
UC35125—KUMFY OUTFITTERS (PTY) LTD, Durban. R3 000.

L

UC10426—LADIES HAT MANUFACTURERS (PTY) LTD, Johannesburg. R800.
77/3003—LAEVELD (POTGIETERSRUS) PLUIMVEE PRODUKTE (EDMS.) BPK., Pietersburg. R120.
77/3001—LAEVELD (TZANEEN) PLUIMVEE PRODUKTE (EDMS.) BPK., Pietersburg. R120.
63/399—A. W. LEINSTER AND PARTNERS (PTY) LTD, Cape Town. R100.
72/10691—LIBRA EIENDOMSAGENTSKAPPE (EDMS.) BPK., Vereeniging. R100.
63/5764—LIMPOPO TOMATIE DISTRIBUEERDERS (EDMS.) BPK., Springs. R200.
73/12189—LISLESON INVESTMENTS (PTY) LTD, Pretoria: R100.
72/5719—LITTLE BIG DEAL (PTY) LTD, Johannesburg: R4 000.
56/962—LITTLE PRUSSIA (PTY) LTD, Worcester: R50 000.
64/1180—LOW PROPERTIES (PTY) LTD, Port Elizabeth: R2 000.
72/1159—LYDENBURG MINERAL WATERS WORKS (PTY) LTD, Lydenburg. R40 00.

M

UC8865—M & A BUILDERS AND CONTRACTORS (PTY) LTD, Johannesburg. R4 000.
66/6152—MAASTRECHT DEVELOPMENT CO. (PTY) LTD, Cape Town. R200.
72/9354—MABOPANE MOTORHAWE (EDMS.) BPK., Pretoria: R200.
70/13172—T. MAREE & SEUNS (EDMS.) BPK., Krugersdorp: R100.
UC11289—MARINA BEACH TRADING COMPANY LTD, Johannesburg. R2 000.
54/473—MARINO ESTATES (PTY) LTD, Durban: R2 000.
65/2123—MARSHALL TRUST NOMINEES (PTY) LTD, Johannesburg. R100.
72/2672—M. MARTENS EN H. VAN DER MERWE BELEGGINGS (EDMS.) BPK., Pretoria: R3 000.
52/2327—MATATIELE BOTTLE STORE (PTY) LTD, East London: R20 000.
75/280—MEIAN ELECTRONICS (PTY) LTD, Johannesburg: R4 000.
70/13877—MECHSTRUK ENGINEERING SERVICES (PTY) LTD, Germiston: R1 000.
72/2180—MEL BERRY (PTY) LTD, Durban: R4 000.
71/12543—MESSAGE RELAY (PTY) LTD, Johannesburg: R8 000.
73/2790—METRO CHEMICALS (PTY) LTD, Pretoria: R300.
76/1917—MICKY'S KONSTRUKSIEWERKE (EDMS.) BPK., Witbank: R4 000.
74/3378—MISTY'S RECORD BAR (EDMS.) BPK., Bellville: R4 000.
72/6638—MODDERDAM SHOES (PTY) LTD, Cape Town: R100.
UC9020—MONO CONTAINERSS (AFRICA) (PTY) LTD, Johannesburg. R20 000.
73/9122—MOOIRIVIER IMPLEMENTE (EDMS.) BPK., Klerksdorp: R4 000.
69/11856—MOOT STREET PROPERTIES (PTY) LTD, Johannesburg. R4 000.
73/6038—MORPIET BRAKE SERVICES PPRUS (PTY) LTD, Pietersburg. R4 000.
65/1019—MOSTERT & BIZZELL (PTY) LTD, Durban: R100.
67/178—MUSIC FOR LEISURE (PTY) LTD, Johannesburg: R200.

N

70/5953—NATAL AGRICULTURAL FINANCE LTD, Durban: R200.
UC8528—NATION PUBLISHING COMPANY (PTY) LTD, Johannesburg. R1 000.
77/168—NAUDCO INVESTMENTS (PTY) LTD, Johannesburg: R4 000.
UC30825—NESTORIA HOLDINGS (PTY) LTD, Cape Town: R2 000.
76/1872—NETLUK BELEGGINGS (EDMS.) BPK., Pretoria: R4 000.
76/124—NGCOLOSI COMMERCIAL GROUP (PTY) LTD, Durban: R100.
64/409—S. R. NICHOLAS SOUTH AFRICA (PTY) LTD, Cape Town: R30 000.
T5848—NIGEL VAN RYN REEFS LTD, Johannesburg: R200.

N

60/4178—NOFFKE & NOFFKE (EDMS.) BPK., Pietersburg. R200.
59/2484—NORHOL INVESTMENTS (PTY) LTD, Krugersdorp. R4 000.

O

75/2679—T. O'HARA AND H. GNIRCK (PTY) LTD, Pretoria. R100.
73/11359—OLIFANTSRUS (EDMS.) BPK., Pietersburg. R120.
73/8938—RUBERY OWEN INVESTMENTS (PTY) LTD, Johannesburg. R1 000 000.
64/8067—PANORAMA HOMES (PTY) LTD, Bellville. R100.
UC13577—PICCADILLY DRESS SALOON (PTY) LTD, Johannesburg. R1 000.
61/346R—C. EN D. PRINS (EDMS.) BPK., Johannesburg. R500.
69/4291—PORTION TWO, STAND TWO FOUR FIVE NORWOOD (PTY) LTD, Johannesburg. R4 000.
75/254—PORTION TWO THREE FIVE RIETFONTEIN (PTY) LTD, Pretoria. R4 000.
75/257—PORTION TWO THREE SEVEN RIETFONTEIN (PTY) LTD, Pretoria: R4 000.
75/262—PORTION TWO TWO EIGHT RIETFONTEIN (PTY) LTD, Pretoria: R4 000.
73/16899—PRETORIA NORTH ELECTRICAL WHOLESALERS (PTY) LTD, Pretoria: R100.

R

UC29052—RAINBOW MILKBAR (PTY) LTD, Durban. R10 000.
78/2460—RANDBURG MOTORS (EDMS.) BPK., Pietersburg: R120.
66/7602—RED LANDS FARM (PTY) LTD, Pretoria. R100.
76/3221—REICHMAN AND FLETCHER DIAMOND SALES (PTY) LTD, Johannesburg. R4 000.
64/5796—REMA TIP TOP (SOUTH AFRICA) (PTY) LTD, Johannesburg. R20 000.
76/3783—RETICO ELECTRICS (PTY) LTD, Johannesburg: R4 000.
UC14508—REX THEATRES LTD, Johannesburg: R10 000.
73/4037—ROAR MOTORS (PTY) LTD, Johannesburg: R200.
UC5606—RONAASEN & MORGAN (PTY) LTD, Cape Town. R2 000.
63/1498—ROUGOGH PRODUCTS (PTY) LTD, Krugersdorp. R100.
71/4414—RUSTEK (PTY) LTD, Durban: R4 000.

S

74/1486—S.G.V.S. INVESTMENTS (PTY) LTD, Durban. R4 000.
78/528—S.R.I. (PTY) LTD, Johannesburg. R4 000.
73/16372—S.A. ARABIAN CONTRACTING & TRADING CO. (PTY) LTD, Johannesburg: R100.
67/11059—ALEC SACKS (1967) (PTY) LTD, Bellville: R60.
74/3550—SALON PELORINA (EDMS.) BPK., Germiston: R4 000.
58/1175—SAMBECK INVESTMENTS (PTY) LTD, Johannesburg: R2 000.
UC16131—S.A. ORT UTILITY COMPANY LTD, Johannesburg: R100 000.
UC12104—SECURITY LANDS LTD, Johannesburg: R120 000.
77/2408—SELCON (PTY) LTD, Cape Town: R1 000.
64/7302—SHALIMAR FILMS DISTRIBUTORS (PTY) LTD, Johannesburg. R100.
63/6101—SHEPARD CONSTRUCTION COMPANY (PTY) LTD, Pretoria. R200.
72/7480—SIDEBURN INVESTMENTS (PTY) LTD, Johannesburg: R4 000.
64/2172—SINLINN APTEEK (PTY) LTD, Pretoria: R200.
72/4624—SIX FIVE ONE BRACKENHURST VIEW (PTY) LTD, Johannesburg: R4 000.
UC4478—J. D. SMYTHE (PTY) LTD, Durban: R12 000.
66/12497—SONKEN INVESTMENTS (PTY) LTD, Pretoria: R200.
62/1897—SOUTHTRONICS (PTY) LTD, Cape Town: R1 500.
UC10737—SPENCER'S CLEANING AND DYEING (PTY) LTD, Johannesburg: R200.
66/1893—STANAL INVESTMENTS (PTY) LTD, Pretoria: R100.
70/13481—STAN COMBRINCK HOLDINGS (PTY) LTD, Johannesburg. R4 000.
64/25—STANDERTON AVIATION (PTY) LTD, Standerton: R100.
73/9555—STAND FOUR HUNDRED AND THIRTY THREE ESTER PARK EXTENSION ONE (PTY) LTD, Germiston: R4 000.
73/4623—STAND TWO SIX EIGHT MALVERN (PTY) LTD, Johannesburg. R4 000.
T7184—STEEL AND BARNETT'S FURNITURE FACTORY LTD, Johannesburg. R15 000.
72/12416—ST QUALLA RESTAURANT (EDMS.) BPK., Pretoria: R4 000.
73/2864—SUMECO (PTY) LTD, Johannesburg: R4 000.
71/5006—SWEEPER SALES AND SERVICES (PTY) LTD, Johannesburg: R4 000.
56/333—SWISS DELICACIES (PTY) LTD, Durban: R2 000.

University of Pretoria
Excellence

T

74/972—TARITE (PTY) LTD, Vereeniging: R4 000
78/782—TETRAGON CONTRACTS (PTY) LTD, Krugersdorp: R4 000
71/8725—G. THOMPSON'S TILT-UP MECHANISM (PTY) LTD, Durban: R4 000
70/2956—TIM-AFRIC (PTY) LTD, Wilbank: R100
69/12708—TOK'S UITRUSTERS (EDMS.) BPK., Krugersdorp: R4 000
66/6181—TOWN & COUNTRY FINANCE COMPANY (PTY) LTD, Durban: R100
72/11120—TRANS-AFRICA HAULIERS (PTY) LTD, Roodepoort: R400
67/4321—TRANSTORIA BELEGGERS (EDMS.) BPK., Pretoria: R100
73/8582—TRIO EARTH MOVERS AND DEMOLISHERS (DEL-VILLE) (PTY) LTD, Durban: R200
UC9457—TRUE BROTHERS (PTY) LTD, Johannesburg: R4 000
76/1569—TUINPRAG (EDMS.) BPK., Klerksdorp: R6 000
72/4104—TUSMILL INVESTMENTS (PTY) LTD, Bellville: R4 000
73/2852—TWO FISHES (SOUTH) (PTY) LTD, Bellville: R4 000
73/2849—TWO FISHES (WEST) (PTY) LTD, Bellville: R4 000.

U

66/1171—UMBANGO SUPPLY STORE (PTY) LTD, Durban: R1 000
UC26930—UNIFIED GOLD & EXPLORATION COMPANY LTD, Pretoria: R400 000
72/10275—UNITED COLLECTIONS (PTY) LTD, Cape Town: R4 000

V

75/2271—VANNA MANUFACTURERS AND DISTRIBUTORS (PTY) LTD, Pretoria: R4 000.
66/6572—VARDY ASSOCIATES SOUTH AFRICA (PTY) LTD, Johannesburg: R100
T5535—VESMA LTD, Johannesburg: R200
59/991—G. J. VLOK & KIE., Pietersburg: R12 000.
76/1586—VYF NEGE SEWE BELIGTINGSENTRUM (EDMS.) BPK., Pretoria: R120.

W

73/4465—WAARDE BEPALINGSBURO (EDMS.) BPK., Pretoria: R100
UC37577—WESTROPA (PTY) LTD, Johannesburg: R11 000
68/10789—WILLOW WATERS NO. 22 (PTY) LTD, Cape Town: R100
70/12018—WINSTON FACTORS AND FINANCE COMPANY (PTY) LTD, Durban: R200.
68/1102—WISHEE-WASHEE AUTOMATIC LAUNDRIES (PTY) LTD, Roodepoort: R100
73/5581—WHITMAR ESTATES COMPANY (PTY) LTD, Durban: R4 000.

Z

70/8322—ZERO SIL (PTY) LTD, Pretoria: R200

BUITELANDSE MAATSKAPPYE/EXTERNAL COMPANIES

Buitelandse maatskappye wat opgehou het om 'n besigheidsplek in die Republiek van Suid-Afrika te hê/External companies which no longer have a place of business in the Republic of South Africa

(Nommer, naam van maatskappy, kapitaal, datum van aanvang/Number, name of company, capital, date of effect.)

71/12808—MULTIQRAPHICS DIVISION (PTY) LTD, R2: 29/8/80.

VERBETERINGSKENNISGEWING

Geliewe kennis te neem dat die name van die Maatskappye BOSCHOEK (PTY) LTD, *Staatskoerant* 6632 van 24/8/1979, Kennisgewing 648 van 24/8/1979, en GILRICH INVESTMENTS (PTY) LTD, *Staatskoerant* 6413 van 27/4/1979, Kennisgewing 294 van 27/4/1979, per abuis gepubliseer is.

CORRECTION NOTICE

Please note that the names of the Companies BOSCHOEK (PTY) LTD, *Government Gazette* 6632 of 24/8/1979, Notice 648 of 24/8/1979, and GILRICH INVESTMENTS (PTY) LTD, *Government Gazette* 6413 of 27/4/1979, Notice 294 of 27/4/1979, were published in error.

KENNISGEWING 599 VAN 1980

ADMINISTRATEUR-GENERAAL VIR DIE GEBIED SUIDWES-AFRIKA

VASGESTELDE DATUM TEN OPSIGTE VAN MAATSKAPPYE WAT NIE VOOR 30 JUNIE 1979 AAN VOORSKRIFTE VAN DIE PROKLAMASIE OP DIE REGISTRASIE EN INLYWING VAN MAATSKAPPYE IN SUIDWES-AFRIKA, 1978, VOLDOEN HET NIE

Kragtens die bevoegdheid my verleen by artikel 1 (3) van die Proklamasie op die Registrasie en inlywing van Maatskappye in Suidwes-Afrika, 1978 (Proklamasie 234 van 1978), soos gewysig, van die Staatspresident, verklaar ek hierby dat ek met die instemming van die Registrateur van Maatskappye, Pretoria, 31 Augustus 1980 bepaal het as die vasgestelde datum ten opsigte van die volgende bestaande maatskappye wat nie aan die bepalings van artikel 29 van genoemde Proklamasie voldoen het nie.

D. J. STRAUSS, Registrateur van Maatskappye, Windhoek.

1957—PIEMONTE (PTY) LTD: R200. Investments.
73/01992—SPRINGER INVESTMENTS (PTY) LTD: R100. Investments

NOTICE 599 OF 1980

ADMINISTRATOR-GENERAL FOR THE TERRITORY OF SOUTH WEST AFRICA

FIXED DATE IN RESPECT OF COMPANIES WHICH HAVE FAILED TO COMPLY WITH THE PROVISIONS OF THE REGISTRATION AND INCORPORATION OF COMPANIES IN SOUTH WEST AFRICA PROCLAMATION, 1978, PRIOR TO 30 JUNE 1979

Under the powers vested in me by section 1 (3) of the Registration and Incorporation of Companies in South West Africa Proclamation, 1978 (Proclamation 234 of 1978), as amended, of the State President, I hereby declare that, with the concurrence of the Registrar of Companies, Pretoria, I have determined 31 August 1980 as the date fixed in respect of the following existing companies which have failed to comply with the provisions of section 29 of the said Proclamation.

D. J. STRAUSS, Registrar of Companies, Windhoek

Maatskappye sonder winsoogmerk

553—SCHULVEREIN OTAVI (1951)
1572—DEUTSCHER SCHULVEREIN GROOTFONTEIN.
21/75/30—SWAKOPMUND HEALTH SERVICES SOCIETY

Koop Nasionale Spaarsertifikate

Buy National Savings Certificates

University of Fort Hare
Together in Excellence

University of Fort Hare
Together in Excellence

INHOUD

No.		Bladsy No.	Staatskoerant No.
Handel en Verbruikersake, Departement van			
Algemene Kennisgewings			
597	Maatskappywet (61/1973): Registrasie van maatskappye	1	7202
598	Maatskappywet (61/1973): Deregistrasie van maatskappye	7	7202
599	Vasgestelde datum	10	7202

CONTENTS

No.		Page No.	Gazette No.
Commerce and Consumer Affairs, Department of			
General Notices			
597	Companies Act (61/1973): Registration of companies	1	7202
598	Companies Act (61/1973): Deregistration of companies	7	7202
599	Fixed date	10	7202

7203

University of Fort Hare
Together in Excellence

REPUBLIC OF SOUTH AFRICA

GOVERNMENT GAZETTE

STAATSKOERANT

VAN DIE REPUBLIEK VAN SUID-AFRIKA

REGULATION GAZETTE No. 3062 PRICE + 1c GST 20c PRYS + 1c AVB REGULASIEKOERANT No. 3062

Registered at the Post Office as a Newspaper ABROAD 30c BUITELANDS *As 'n Nuusblad by die Poskantoor Geregistreer*

POST FREE · POSVRY

VOL. 182] PRETORIA, 29 AUGUST AUGUSTUS 1980 [No. 7203

GOVERNMENT NOTICES

DEPARTMENT OF CO-OPERATION AND DEVELOPMENT

No. R. 1765 29 August 1980

ESTABLISHMENT OF A COMMUNITY COUNCIL FOR THE URBAN RESIDENTIAL AREA OF WATTVILLE

I, George de Villiers Morrison, Deputy Minister of Co-operation, hereby establish, on behalf of the Minister of Co-operation and Development by virtue of the powers vested in him by section 2 (1) of the Community Council's Act, 1977 (Act 125 of 1977), a community council for the urban residential area defined in the Schedule hereto.

G. DE V. MORRISON, Deputy Minister of Co-operation.

(File A2/14/2/W57)

SCHEDULE

Urban residential area	*Defined in Government Notice*
Wattville (situate at Benoni)....	502 of 5 April 1957.

No. R. 1766 29 August 1980

REGULATIONS GOVERNING THE COMMUNITY COUNCIL OF WATTVILLE

I, George de Villiers Morrison, Deputy Minister of Co-operation, on behalf of and by direction of the Minister of Co-operation and Development, by virtue of the powers vested in him by section 11 (1) of the Community Council's Act, 1977 (Act 125 of 1977), hereby make the regulations contained in the accompanying Schedule.

G. DE V. MORRISON, Deputy Minister of Co-operation.

(File A2/14/2/W57)

GOEWERMENTSKENNISGEWINGS

DEPARTEMENT VAN SAMEWERKING EN ONTWIKKELING

No. R. 1765 29 Augustus 1980

INSTELLING VAN 'N GEMEENSKAPSRAAD VIR DIE STEDELIKE WOONGEBIED VAN WATTVILLE

Ek, George de Villiers Morrison, Adjunk-minister van Samewerking, stel hierby namens die Minister van Samewerking en Ontwikkeling, kragtens die bevoegdheid hom verleen by artikel 2 (1) van die Wet op Gemeenskapsrade, 1977 (Wet 125 van 1977), 'n gemeenskapsraad in vir die stedelike woongebied omskryf in die Bylae hiervan.

G. DE V. MORRISON, Adjunk-minister van Samewerking.

(Lêer A2/14/2/W57)

BYLAE

Stedelike woongebied	*Omskryf by Goewermentskennisgewing*
Wattville (geleë by Benoni).....	502 van 5 April 1957.

No. R. 1766 29 Augustus 1980

REGULASIES BETREFFENDE DIE GEMEENSKAPSRAAD VAN WATTVILLE

Ek, George de Villiers Morrison, Adjunk-minister van Samewerking, vaardig hierby namens en in opdrag van die Minister van Samewerking en Ontwikkeling, kragtens die bevoegdheid hom verleen by artikel 11 (1) van die Wet op Gemeenskapsrade, 1977 (Wet 125 van 1977), die regulasies uit wat in die bygaande Bylae vervat is.

G. DE V. MORRISON, Adjunk-minister van Samewerking.

(Lêer A2/14/2/W57)

University of Pretoria
Tuchtheria Excellence

SCHEDULE

CHAPTER 1

DEFINITIONS

1. In these Regulations, unless the context otherwise indicates—

"agent" means an agent appointed under regulation 23;

"Board" means the East Rand Administration Board established by section 2 (1) of the Black Affairs Administration Act, 1971 (Act 45 of 1971), read with Government Notices R. 857 of 1973 and R. 630 of 1979;

"Chief Director" means the Chief Director of the Board;

"Commissioner" means the person appointed Commissioner, Benoni, under section 2 (2) of the Black Administration Act, 1927 (Act 38 of 1927);

"committee" means any committee of the Community Council appointed under section 5 (1) (k) of the Act;

"Community Council" means the Wattville Community Council established under section 2 (1) of the Act and "Council" has a corresponding meaning;

"corrupt practice" means any of the offences of treating, undue influence, bribery and personation;

"electoral officer" means the electoral officer referred to in regulation 15 and includes an assistant electoral officer;

"identity document" means a reference book referred to in the Black (Abolition of Passes Co-ordination of Documents) Act 1952 (Act 67 of 1952), and a passport, permit, document of identity or other travel document referred to in the Admission of Persons to the Republic Regulation Act, 1972 (Act 59 of 1972);

"illegal practice" means any of the offences created by regulations 58, 59 and 60;

"member" means a member of the Community Council;

"registered occupier" means a person over the age of 18 years to whom a site, residential, hostel or lodger's permit or certificate of occupation has been issued in terms of the Regulations contained in the Schedule to Government Notice R. 1036 of 1968, any person over the age of 18 years to whom the township manager has issued a permit permitting him to occupy any approved dwelling on any church, school or institutional site and the person over the age of 18 years whose name appears on such permit or certificate as well as any child of such permit or certificate holder over the age of 18 years who lawfully resides continuously with such permit or certificate holder;

"Secretary of the Community Council" means the person appointed or employed as such by the Community Council under section 5 (1) (i) of the Act;

"the Act" means the Community Council's Act, 1977 (Act 125 of 1977);

"the principal Act" means the Black (Urban Areas) Consolidation Act, 1945 (Act 25 of 1945);

"township manager" means any officer appointed in terms of section 22 of the principal Act and licensed under Government Notice 552 of 1958 to manage the urban residential area for which the Community Council has been established and includes the duly appointed and licensed deputy and assistant of such officer;

BYLAE

HOOFSTUK 1

WOORDOMSKRYWING

1. In hierdie Regulasies, tensy uit die samehang anders blyk, beteken—

"agent" 'n agent aangestel kragtens regulasie 23;

"die Hoofwet" die Swartes (Stadsgebiede) Konsolidasiewet, 1945 (Wet 25 van 1945);

"die Wet" die Wet op Gemeenskapsrade, 1977 (Wet 125 van 1977);

"dorpsbestuurder" enige beampte aangewys kragtens artikel 22 van die Hoofwet en gelisensieer kragtens Goewermentskennisgewing 552 van 1958 om die stedelike woongebied waarvoor die Gemeenskapsraad ingestel is, te bestuur, asook die behoorlike aangestelde en gelisensieerde adjunk en assistent van sodanige beampte;

"Gemeenskapsraad" die Gemeenskapsraad van Wattville ingestel kragtens artikel 2 (1) van die Wet;

"geregistreerde bewoner" 'n persoon bo die ouderdom van 18 jaar aan wie 'n perseel-, woon-, tehuis- of loseerderspermit of 'n sertifikaat van bewoning kragtens die Regulasies vervat in die Bylae van Goewermentskennisgewing R. 1036 van 1968 uitgereik is, 'n persoon bo die ouderdom van 18 jaar aan wie die dorpsbestuurder 'n permit uitgereik het om 'n goedgekeurde woning op 'n kerk-, skool- of inrigtingsterrein te bewoon en die persoon bo die ouderdom van 18 jaar wie se naam op sodanige permit of sertifikaat verskyn, asook enige kind bo die ouderdom van 18 jaar van sodanige permit- of sertifikaathouer wat wettiglik, onafgebroke by sodanige permit- of sertifikaathouer inwoon;

"Hoofdirekteur" die Hoofdirekteur van die Raad;

"identiteitsdokument" 'n bewysboek in die Swartes (Afskaffing van Passe en Koördinering van Dokumente) Wet, 1952 (Wet 67 van 1952), bedoel en 'n paspoort, permit, identifikasiebewys of ander reisdokument in die Wet op die Reëling van die Toelating van Persone tot die Republiek, 1972 (Wet 59 van 1972), bedoel;

"kieser" iemand wat ingevolge regulasie 3 bevoeg is om by 'n verkiesing van verkose lede van die Gemeenskapsraad te stem en wie se naam op 'n kieserslys in regulasie 4 bedoel, voorkom;

"komitee" 'n komitee van die Gemeenskapsraad aangestel kragtens artikel 5 (1) (k) van die Wet;

"Kommissaris" die persoon aangestel as Kommissaris, Benoni, kragtens artikel 2 (2) van die Swart Administrasie Wet, 1927 (Wet 38 van 1927);

"korrupte bedrywigheid" enige van die misdrywe van trakteerdery, onbehoorlike beïnvloeding, omkopery en uitgee vir 'n ander;

"lid" 'n lid van die Gemeenskapsraad;

"onwettige bedrywigheid" enige van die misdrywe geskep deur regulasies 58, 59 en 60;

"Raad" die Oos-Rand Administrasieraad ingestel by artikel 2 (1) van die Wet op Administrasie van Swart Sake, 1971 (Wet 45 van 1971), saamgelees met Goewermentskennisgewings R. 857 van 1973 en R. 630 van 1979;

"Sekretaris van die Gemeenskapsraad" die persoon wat kragtens artikel 5 (1) (i) van die Wet as sodanig deur die Gemeenskapsraad aangestel of in diens van die Gemeenskapsraad is;

"voter" means any person who is qualified to vote at any election of elected members of the Community Council in terms of regulation 3 and whose name appears on any voters' list referred to in regulation 4.

CHAPTER 2

DELIMITATION

Delimitation of wards

2. (1) The Board shall divide the area for which the Community Council has been established into five wards.

(2) Such division shall be made within one month after the date of publication of these Regulations and thereafter at intervals of not less than five years and not more than 10 years commencing from the last delimitation of wards.

(3) Details of such division shall be made available for inspection at the office of the township manager.

CHAPTER 3

VOTERS AND VOTERS' LISTS

Qualification of voters

3. Only persons who are citizens of the Republic of South Africa or any territory which previously formed part of the Republic and who are registered occupiers within the area for which the Community Council has been established and whose names appear on the voters' list, shall be qualified to vote at any election of elected members of the Community Council.

Voters' lists

4. (1) Within two months of the delimitation of wards under regulation 2, the electoral officer shall prepare for each ward a list of persons who are entitled to vote.

(2) The lists prepared after any such delimitation of wards shall come into operation immediately after they have been so prepared by the electoral officer.

(3) Until the coming into operation of the voters' lists prepared after the delimitation of wards, the current voters' lists shall continue to be valid, but thereafter the lists prepared after such delimitation shall be the voters' lists for the respective wards.

(4) The voters' lists prepared for the various wards after any delimitation of wards shall be—

(a) supplemented by the insertion therein of the names of voters whose names do not appear therein and who have satisfied the electoral officer that they are qualified to have their names inserted therein; and

(b) further adjusted by the deletion of the name of any person who is dead or no longer qualifies for continuance of registration as a voter.

Voters' list in which voter's name is to be entered

5. No person's name shall be entered in a voters' list for any particular ward unless he actually resides in such ward on the date on which his name is so entered in the voters' list.

Particulars to be shown in voters' list

6. A voters' list shall show in respect of every person whose name is included therein—

(a) a serial number;

(b) his surname and immediately thereafter his first names;

"verkiesingsbeampte" die verkiesingsbeampte in regulasie 15 bedoel en ook 'n assistent-verkiesingsbeampte.

HOOFSTUK 2

AFBAKENING

Afbakening van wyke

2. (1) Die Raad verdeel die gebied waarvoor die gemeenskapsraad ingestel is in vyf wyke.

(2) Sodanige verdeling word binne een maand na die datum van publikasie van hierdie Regulasies gedoen en daarna met tussenpose van minstens vyf jaar en hoogstens 10 jaar, gereken van die jongste afbakening van wyke.

(3) Besonderhede van sodanige verdeling word vir inspeksie by die kantoor van die dorpsbestuurder beskikbaar gestel.

HOOFSTUK 3

KIESERS EN KIESERSLYSTE

Kwalifikasie van kiesers

3. Alleenlik burgers van die Republiek van Suid-Afrika of 'n gebied wat voorheen deel van die Republiek uitgemaak het en wat geregistreerde bewoners is binne die gebied waarvoor die Gemeenskapsraad ingestel is en wie se name op die kieserslys verskyn, kwalifiseer om by 'n verkiesing van gekose lede van die Gemeenskapsraad te stem.

Kieserslyste

4. (1) Binne twee maande na die afbakening van wyke kragtens regulasie 2 moet die verkiesingsbeampte 'n lys van persone wat geregtig is om te stem, vir elke wyk opstel.

(2) Die lyste wat na sodanige afbakening van wyke opgestel is, tree in werking onmiddellik nadat dit aldus deur die verkiesingsbeampte opgestel is.

(3) Die lopende kieserslyste bly van krag tot dat die kieserslyste wat na die afbakening van wyke opgestel is in werking tree, en daarna is die lyste wat na sodanige afbakening opgestel is, die kieserslyste vir die onderskeie wyke.

(4) Die kieserslyste wat na 'n afbakening van wyke vir die verskillende wyke opgestel is, word—

(a) aangevul deur die opname daarin van die name van kiesers wie se name nie daarin verskyn nie en wat die verkiesingsbeampte daarvan oortuig dat hulle kwalifiseer vir die opname van hul name daarin; en

(b) verder aangepas deur die skrapping daarin van die name van kiesers wat oorlede is of nie langer bevoeg is om as 'n kieser geregistreer te wees nie.

Kieserslys waarin kiesersnaam ingeskryf moet word

5. Geen persoon se naam word in 'n kieserslys vir 'n besondere wyk ingeskryf nie tensy hy inderdaad in sodanige wyk woon op die datum waarop sy naam aldus in die kieserslys ingeskryf word.

Besonderhede wat op 'n kieserslys aangegee moet word

6. Op 'n kieserslys moet ten aansien van iedere persoon wie se naam daarin opgeneem is, aangegee word—

(a) 'n volgnommer;

(b) sy van en onmiddellik daarna sy voorname;

University of Fort Hare

(c) his residential address; and
(d) his identity document number;

in order of house numbers and, in the case of persons resident in hostels, all surnames shall be in alphabetical order.

Permanent change in the place of residence of voter

7. (1) Whenever there has been a permanent change in the place of residence of a voter, he shall forthwith notify the electoral officer of the change.

(2) On receipt of any such notification the electoral officer shall amend the voters' list or lists as circumstances may require.

List of insertions

8. On the first day of every month the electoral officer shall prepare in respect of each ward, a list of insertions, *mutatis mutandis* in the form prescribed in regulation 6 in respect of a voters' list, showing the names inserted in terms of regulations 4 (4) (a) and 7 (2) in the voters' list for the ward in question during the immediately preceding month.

Amendment of voters' list by electoral officer

9. (1) Subject to the provisions of subregulations (2) and (3), the electoral officer shall, if he is satisfied as to the relative facts, amend the voters' list for any ward by—

(a) correcting any mistake, supplying any omission or recording any change in the particulars of the registration of any person;

(b) after ascertaining by virtue of the provisions of regulation 7 that a person has ceased to be permanently resident in the ward in which he is registered as a voter, transferring his name to the list in respect of the ward to which he has moved, or, in the case of a person who has left the area for which the Community Council has been established, removing his name from the list;

(c) removing the name of any person who is dead or no longer qualifies for continuance of registration as a voter;

(d) removing any superfluous entry where the name of the same person appears more than once in the same voters' list or in voters' lists for more than one ward.

(2) Before removing the name of any person from the voters' list, or adding it thereto, the electoral officer shall, by such means as are practicable, satisfy himself that the name relates to the person concerned.

(3) The electoral officer shall cause a copy of a list containing the names of persons who no longer qualify for continuance of registration as voters and whose names were removed from the voters' list during any month, to be displayed on the notice board at the township manager's office for a period of at least 30 days commencing not later than the 20th day of the next ensuing month.

When voters' lists to be printed

10. (1) The voters' lists as prepared and supplemented and further adjusted from time to time in accordance with the provisions of these Regulations, shall be printed, subject to the provisions of subregulation (2), not later than one month before an election referred to in regulation 19, and at such other times as the electoral officer considers necessary.

(2) The voters' lists printed for the purposes of an election referred to in subregulation (1) shall be the voters' lists for the wards in question as supplemented

(c) sy woonadres; en
(d) sy identiteitsdokumentnommer;

in volgorde van huisnommers, en in die geval van persone woonagtig in tehuise, moet alle vanne in alfabetiese volgorde wees.

Permanente verandering in verblyfplek van kieser

7. (1) Wanneer daar 'n permanente verandering plaasvind in die verblyfplek van 'n kieser, stel hy onverwyld die verkiesingsbeampte in kennis van die verandering.

(2) By ontvangs van so 'n kennisgewing, wysig die verkiesingsbeampte die kieserslys of -lyste, na gelang van die omstandighede.

Lys van opnames

8. Die verkiesingsbeampte stel op die eerste dag van elke maand ten opsigte van elke wyk 'n lys van opnames op, *mutatis mutandis* in die vorm in regulasie 6 ten opsigte van 'n kieserslys voorgeskryf, waarin die name wat gedurende die onmiddellik voorafgaande maand ingevolge regulasies 4 (4) (a) en 7 (2) in die kieserslys vir die betrokke wyk opgeneem is.

Wysiging van kieserslys deur verkiesingsbeampte

9. (1) Behoudens die bepalings van subregulasies (2) en (3), wysig die verkiesingsbeampte, indien hy oortuig is ten opsigte van die feite wat ter sake is, die kieserslys vir 'n wyk deur—

(a) 'n fout in die besonderhede van die registrasie van 'n persoon te verbeter, 'n weglating daarin aan te vul of 'n verandering daarin aan te teken;

(b) na vasstelling uit kragte van die bepalings van regulasie 7 dat 'n persoon opgehou het om permanent in die wyk waarin hy as 'n kieser geregistreer is te woon, sy naam oor te plaas na die lys ten opsigte van die wyk waarheen hy verhuis het of, in die geval van 'n persoon wat die gebied waarvoor die Gemeenskapsraad ingestel is verlaat het, sy naam van die lys te verwyder;

(c) die naam van 'n persoon wat oorlede is of onbevoeg is om as kieser geregistreer te bly, te verwyder;

(d) 'n oortollige inskrywing te verwyder, waar die naam van dieselfde persoon meer as een maal in dieselfde kieserslys of in kieserslyste vir meer as een wyk voorkom.

(2) Alvorens die naam van 'n persoon uit die kieserslys te verwyder of dit daarin by te voeg, vergewis die verkiesingsbeampte hom deur sodanige middele as wat uitvoerbaar is, daarvan dat die naam op die betrokke persoon betrekking het.

(3) Die verkiesingsbeampte laat 'n afskrif van 'n lys bevattende die name van persone wat onbevoeg is om as kiesers geregistreer te bly en wie se name gedurende enige maand van die kieserslys verwyder is, op die aanplakbord by die dorpsbestuurder se kantoor vertoon vir 'n tydperk van minstens 30 dae beginnende voor of op die 20ste dag van die daaropvolgende maand.

Wanneer kieserslyste gedruk moet word

10. (1) Die kieserslyste, soos ooreenkomstig die bepalings van hierdie Regulasies opgestel en van tyd tot tyd aangevul en verder aangepas, word, behoudens die bepalings van subregulasie (2), gedruk uiterlik een maand voor 'n verkiesing in regulasie 19 bedoel, en op die ander tye wat die verkiesingsbeampte nodig ag.

(2) Die kieserslyste wat vir die doeleindes van 'n verkiesing in subregulasie (1) bedoel, gedruk word, is die kieserslyste vir die betrokke wyke soos van tyd tot

and further adjusted from time to time up to and including the last day of the month preceding the month in which the notice referred to in regulation 19 is issued.

(3) A voters' list printed for the purposes of an election referred to in subregulation (1), shall not be amended and shall prior to such election be made available for inspection for a period of at least 14 days at the office of the township manager within whose area of jurisdiction the ward is situated.

Voters' lists not invalidated by reason of errors

11. If through accident, inadvertence or oversight, anything required by law to be done in the preparation of any voters' list is erroneously done or omitted to be done, the voters' list shall not be invalidated thereby and the electoral officer may take or cause to be taken such steps as are necessary to rectify the error or omission.

CHAPTER 4

QUALIFICATIONS

12. Subject to the provisions of section 3 (5) of the Act, no person shall be qualified to be or remain a member of the Community Council if he—

(a) is not a registered occupier in the area for which the Community Council has been established;

(b) is not a voter;

(c) is in arrears for more than two months with any charges, fees or other dues payable by him to the Board or the Community Council on the day when nominations of candidates for the election of members of the Community Council close;

(d) has, within the period of three years immediately preceding the date of his nomination for election, been convicted of any offence in respect of which he has been sentenced to imprisonment without the option of a fine for a period of more than six months;

(e) is being detained as mentally disordered or defective under the Mental Disorders Act, 1916 (Act 38 of 1916), or the Mental Health Act, 1973 (Act 18 of 1973);

(f) is an employee of the Community Council;

(g) is prohibited in terms of section 2 (4) of the Riotous Assemblies Act, 1956 (Act 17 of 1956), from attending gatherings, and particulars of the notice addressed to him under the said section 2 (4) have been published in the *Government Gazette* in terms of section 2 (5) of the said Act;

(h) is prohibited in terms of section 5 (1) (e) or section 9 (1) of the Internal Security Act, 1950 (Act 44 of 1950), from attending gatherings;

(i) is a person whose name appears on a list compiled in terms of the provisions of section 4 (10) of the Internal Security Act, 1950 (Act 44 of 1950), and published in the *Government Gazette* in terms of section 8 (4) of the said Act.

CHAPTER 5

ELECTIONS

General elections

13. A general election of members of the Community Council shall take place not later than six months after the publication of these Regulations and thereafter in every third year during September.

tyd aangevul en verder aangepas tot en met die laaste dag van die maand wat die maand waarin die in regulasie 19 bedoelde kennisgewing uitgevaardig word, voorafgaan.

(3) 'n Kieserslys wat vir die doeleindes van 'n verkiesing in subregulasie (1) bedoel, gedruk is, word nie gewysig nie en word voor sodanige verkiesing vir inspeksie beskikbaar gestel vir 'n tydperk van minstens 14 dae by die kantoor van die dorpsbestuurder binne wie se regsgebied die wyk geleë is.

Kieserslyste nie as gevolg van foute ongeldig nie

11. Indien per ongeluk, per abuis of deur onopletendheid iets wat regtens by die opstel van 'n kieserlys gedoen moet word, verkeerd gedoen word of nie gedoen word nie, maak dit die kieserslys nie ongeldig nie, en kan die verkiesingsbeampte die stappe doen of laat doen wat nodig is om die fout te verbeter of om die versuim te herstel.

HOOFSTUK 4

KWALIFIKASIES

12. Behoudens die bepalings van artikel 3 (5) van die Wet, is geen persoon bevoeg om lid van die Gemeenskapsraad te wees of te bly nie indien hy—

(a) nie 'n geregistreerde bewoner binne die gebied waarvoor die Gemeenskapsraad ingestel is, is nie;

(b) nie 'n kieser is nie;

(c) op die dag waarop nominasies van kandidate vir die verkiesing van lede van die Gemeenskapsraad sluit, vir meer as twee maande agterstallig is met die betaling van vorderings, gelde of ander bedrae wat deur hom aan die Raad of die Gemeenskapsraad verskuldig is;

(d) binne die tydperk van drie jaar wat die datum van sy nominasie vir verkiesing onmiddellik voorafgaan, skuldig bevind is aan enige misdryf ten opsigte waarvan hy tot gevangenisstraf sonder die keuse van 'n boete vir 'n tydperk van meer as ses maande gevonnis is;

(e) kragtens die Wet op Geestesgebreken, 1916 (Wet 38 van 1916), of die Wet op Geestesgesondheid, 1973 (Wet 18 van 1973), as geestelik gekrenk of gebrekkig aangehou word;

(f) 'n werknemer van die Gemeenskapsraad is;

(g) kragtens artikel 2 (4) van die Wet op Oproerige Byeenkomste, 1956 (Wet 17 van 1956), verbied is om byeenkomste by te woon en besonderhede van die kennisgewing wat kragtens bedoelde artikel 2 (4) aan hom gerig is, kragtens artikel 2 (5) van bedoelde Wet in die *Staatskoerant* afgekondig is;

(h) kragtens artikel 5 (1) (e) of 9 (1) van die Wet op Binnelandse Veiligheid, 1950 (Wet 44 van 1950), verbied is om byeenkomste by te woon;

(i) iemand is wie se naam verskyn op 'n lys, saamgestel kragtens die bepalings van artikel 4 (10) van die Wet op Binnelandse Veiligheid, 1950 (Wet 44 van 1950), en in die *Staatskoerant* kragtens artikel 8 (4) van bedoelde Wet afgekondig is.

HOOFSTUK 5

VERKIESINGS

Algemene verkiesings

13. 'n Algemene verkiesing van lede van die Gemeenskapsraad word gehou uiterlik ses maande nadat hierdie Regulasies bekendgemaak is en daarna driejaarliks gedurende September.

Term of office of members

14. (1) A member elected at a general election or an election held to fill a casual vacancy shall assume office on the date of such election.

(2) A member designated by the Minister under section 3 (2) of the Act shall assume office on a date determined by the Minister.

(3) A member shall, subject to the provisions of regulations 61 and 62, remain in office up to and including the day immediately preceding the next succeeding general election or until the terms for which he was designated by the Minister in terms of section 3 (2) of the Act, has expired.

Electoral officer

15. (1) The Commissioner shall appoint, after consultation with the Board, an electoral officer and as many assistant electoral officers as he may deem necessary.

(2) The electoral officer shall be responsible for the conduct of elections of members of the Community Council.

Presiding officer, polling officers, counting officers and witnesses

16. The electoral officer shall appoint in writing a presiding officer and as many polling officers and witnesses as may be necessary for effectually taking poll at every polling station and he shall appoint as many counting officers as may be necessary for the counting of votes after the close of the poll.

Polling stations

17. There shall be polling stations at such place or places as the electoral officer deems necessary.

Members to be elected

18. The number of members determined by the Minister under section 3 (1) of the Act shall be elected.

Fixing of nomination and polling dates

19. (1) The electoral officer shall, not later than three months after the date of publication of these Regulations, and thereafter not later than the first day of August of each year in which a general election is to be held, call, in a notice which shall be in both official languages and shall be published in at least one newspaper which generally circulates in the area for which the Community Council has been established and shall be displayed on the notice board at each township manager's office situated in such area, for the nomination of candidates for the election of members of the Community Council.

(2) The notice referred to in subregulation (1) shall specify—

(a) the place at which and the date and time before which nominations shall be received by the electoral officer, which date shall be not less than 14 days and not more than 21 days from the date of first publication of such notice; and

(b) the places at which and the date, other than a Sunday, on which polling shall take place.

Hours of poll

20. The poll shall commence at 07h00 and close at 21h00 on the polling day, but the presiding officer shall permit every voter who is at 21h00 inside the room in which the ballot box is, to record his vote before the closing of the poll.

Ampstermyn van lede

14. (1) 'n Lid verkies in 'n algemene verkiesing of 'n verkiesing gehou om 'n toevallige vakature te vul, aanvaar sy amp op die datum van sodanige verkiesing.

(2) 'n Lid deur die Minister kragtens artikel 3 (2) van die Wet aangewys, aanvaar sy amp op die datum deur die Minister bepaal.

(3) 'n Lid bly, behoudens die bepalings van regulasies 61 en 62, in sy amp aan tot en met die dag wat die eersvolgende algemene verkiesing onmiddellik voorafgaan of totdat die termyn waarvoor hy ingevolge artikel 3 (2) van die Wet deur die Minister aangewys is, verstryk.

Verkiesingsbeampte

15. (1) Die Kommissaris na oorlegpleging met die Raad, stel 'n verkiesingsbeampte en soveel assistent verkiesingsbeamptes as wat hy nodig ag, aan.

(2) Die verkiesingsbeampte is verantwoordelik vir die hou van verkiesings van lede van die Gemeenskapsraad.

Voorsittende beampte, stemopnemers, telbeamptes en getuies

16. Die verkiesingsbeampte stel skriftelik 'n voorsittende beampte en soveel stemopnemers en getuies aan as wat nodig is om die stemming doeltreffend te laat plaasvind by iedere stemburo en stel soveel telbeamptes aan as wat nodig is vir die tel van die stemme na die sluiting van die stemming.

Stemburo's

17. Daar moet stemburo's wees by sodanige plek of plekke as wat die verkiesingsbeampte nodig ag.

Lede wat verkies moet word

18. Die aantal lede deur die Minister kragtens artikel 3 (1) van die Wet bepaal, word verkies.

Bepaling van nominasie- en stemdatums

19. (1) Die verkiesingsbeampte moet binne drie maande na die bekendmaking van hierdie Regulasies en daarna uiters op die eerste dag van Augustus van elke jaar waarin 'n algemene verkiesing gehou staan te word, in 'n kennisgewing, in albei amptelike tale, wat afgekondig word in ten minste een nuusblad wat gewoonlik in die gebied waarvoor die Gemeenskapsraad ingestel is, versprei word en wat op die aanplakbord by elke dorpsbestuurder se kantoor in sodanige gebied geleë vertoon word, om nominasies vra van kandidate vir verkiesing tot lede van die Gemeenskapsraad.

(2) Die kennisgewing in subregulasie (1) bedoel, vermeld—

(a) die plek waar en die datum en tyd tot en met wanneer nominasies deur die verkiesingsbeampte ontvang sal word, welke datum minstens 14 dae en hoogstens 21 dae na die datum van eerste afkondiging van sodanige kennisgewing moet wees; en

(b) die plekke waar en die datum, uitgesonderd 'n Sondag, waarop stemming sal plaasvind.

Ure van stemming

20. Stemming begin om 07h00 en sluit om 21h00 op die dag van stemming, maar die voorsittende beampte laat elke kieser wat om 21h00 binne die kamer waarin die stembus is, sy stem uitbring voor die sluiting van die stemming.

University of Pretoria
Together in Excellence

Nomination of candidates

21. (1) Nominations of candidates for election as members of the Community Council shall be submitted in writing to the electoral officer in the form contained in Annexure A hereto, which form shall be supplied by the township manager, and shall be supported by the signatures of not less than 10 persons who are registered as voters in the ward for which the nomination is made.

(2) The electoral officer shall as soon as practicable, and not later than 14 days after the date referred to in subregulation (1), affix on the notice board at the office of the township manager a notice containing a list of the candidates duly nominated in terms of these Regulations and shall also declare those candidates who have been returned unopposed to be elected members for their respective wards.

Deposit by or on behalf of persons nominated

22. (1) There shall be deposited by or on behalf of each person nominated as a candidate for election as a member of the Community Council the sum of R30 with the electoral officer on or before the date and time referred to in regulation 19 (2) (a).

(2) If poll takes place and the total number of votes received thereat by any unsuccessful candidate is less than one-fifth of the number of votes received by the successful candidate the sum deposited by or on behalf of such unsuccessful candidate shall be forfeited and shall be paid into the funds of the Community Council.

(3) Save as is in this regulation expressly provided, the sum deposited shall be returned to the depositor.

Candidates and agents

23. (1) Any duly nominated candidate at an election of members of the Community Council may, in the form contained in Annexure B hereto, appoint one or more agents to assist him and shall advise the electoral officer in writing of the name(s) and address(es) of such agent or agents.

(2) The candidates and only one agent per candidate shall be allowed at any particular time to be present inside any polling station or any place where votes are counted.

(3) Any person appointed an agent in terms of subregulation (1) shall produce his letter of appointment to the electoral officer, presiding officer or polling officer, as the case may be, if required to do so.

Provision of equipment

24. (1) For all elections the electoral officer shall arrange for voting compartments, ballot boxes, ballot papers, instruments for marking ballot papers with the official mark and other requirements to be provided and shall do such other acts and make such arrangements to facilitate the taking of the poll as he may deem necessary for effectually conducting the election.

(2) The equipment and requirements in connection with any election shall be supplied by and all expenditure in this connection shall be for the account of the Community Council: Provided that the equipment and requirements in connection with the first election shall be supplied by and all expenditure in connection with such election shall be for the account of the Board.

Nominasie van kandidate

21. (1) Die nominasie van kandidate vir verkiesing tot lede van die Gemeenskapsraad moet skriftelik by die verkiesingsbeampte ingedien word in die vorm in Aanhangsel A hiervan vervat en wat deur die dorpsbestuurder verskaf word en dit moet gestaaf word deur die handtekeninge van 10 persone wat as kiesers geregistreer is in die wyk ten opsigte waarvan sodanige nominasie geskied.

(2) Die verkiesingsbeampte moet so gou doenlik, en uiters 14 dae na die datum in subregulasie (1) bedoel, 'n kennisgewing met die lys van kandidate wat behoorlik ingevolge hierdie Regulasies genomineer is, op die aanplakbord by die kantoor van die dorpsbestuurder opplak en moet ook dié kandidate wat onbestrede verkies is, tot verkose lede vir hul onderskeie wyke verklaar.

Deposito deur of namens genomineerde persone

22. (1) Daar word op of voor die datum en tyd in regulasie 19 (2) (a) bedoel, deur of ten behoewe van elke persoon wat genomineer is as kandidaat vir verkiesing tot lid van die Gemeenskapsraad die bedrag van R30 by die verkiesingsbeampte gestort.

(2) Indien 'n stemming plaasvind en die totale getal stemme wat daarby op enige verslane kandidaat uitgebring is, minder is as 'n vyfde van die getal stemme van die suksesvolle kandidaat, word die bedrag wat deur of ten behoewe van sodanige verslane kandidaat gestort is, verbeur en in die fondse van die Gemeenskapsraad gestort.

(3) Behoudens die uitdruklike bepalings van hierdie regulasie, word die gestorte bedrag aan die deposant terugbetaal.

Kandidate en agente

23. (1) Enige behoorlik genomineerde kandidaat by 'n verkiesing van lede van die Gemeenskapsraad kan, in die vorm vervat in Aanhangsel B hiervan, een of meer agente aanstel om hom behulpsaam te wees, en hy moet die verkiesingsbeampte skriftelik in kennis stel van die naam (name) en adres(se) van sodanige agent(e).

(2) Die kandidate en slegs een agent per kandidaat word toegelaat om op enige bepaalde tydstip binne enige stemburo of by enige plek waar stemme getel word, teenwoordig te wees.

(3) 'n Persoon wat kragtens subregulasie (1) as agent aangestel is, moet sy aanstellingsbrief toon aan die verkiesingsbeampte, voorsittende beampte of stemopnemer na gelang van die geval, indien dit van hom verlang word.

Verskaffing van uitrusting

24. (1) Die verkiesingsbeampte reël by alle verkiesings dat stemhokkies, stembusse, stembriewe, toestelle om die stembriewe met die amptelike merk te merk en ander benodigdhede verskaf word en doen sodanige ander stappe en tref sodanige reëlings ter vergemakliking van die stemming as wat hy nodig ag ten einde die verkiesing op doeltreffende wyse te kan laat geskied.

(2) Die Gemeenskapsraad verskaf die uitrusting en benodigdhede in verband met 'n verkiesing en alle uitgawes in verband met sodanige verkiesing is vir sy rekening: Met dien verstande dat die Raad die uitrusting en benodigdhede in verband met die eerste verkiesing verskaf en dat alle uitgawe in dié verband vir sy rekening is.

Polling station at which voter shall vote

25. A voter voting in the area of jurisdiction of the Community Council may only vote at a polling station for the ward in which he is registered as a voter.

Declaration of secrecy

26. (1) The electoral officer and every presiding officer, polling officer, candidate, agent, witness or any other person or official (except a policeman) entitled to attend at a polling station or at the counting of votes shall, before the opening of the poll, and every counting officer shall, before the commencement of the counting of votes, make, in duplicate, in the form contained in Annexure C hereto, a declaration of secrecy under oath before a justice of the peace or a commissioner of oaths, or before the electoral officer or a presiding officer who are hereby authorised to administer such oath.

(2) The original declaration of secrecy shall be handed to the electoral officer by the person who made it, before the opening of the poll or before the commencement of the counting of votes, as the case may be, and such person shall at all times during the polling or the counting of votes have the duplicate of such declaration of secrecy in his possession and shall on demand produce it to the electoral officer or the presiding officer for inspection.

Procedure at ballot

27. The presiding officer, in the presence of such candidates and agents as may be present, shall—

(a) before the commencement of the poll, seal each ballot box, leaving open an opening through which ballot papers may be inserted into the ballot box;

(b) at the closing of the poll, seal the opening referred to in paragraph (a).

Powers of the presiding officer at a polling station

28. (1) The presiding officer shall keep order at a polling station, shall regulate the number of voters to be admitted at any time and shall exclude all other persons except the electoral officer, the candidates or their agents, and policemen and other officials on duty.

(2) Save as is excepted in subregulation (1), the presiding officer may require any person (other than a person recording his vote) to leave the polling station and any person who fails to leave the polling station when so required may be arrested without a warrant on the order of the presiding officer and shall be guilty of an offence.

(3) The powers conferred by this regulation shall not be exercised so as to prevent any voter who is otherwise entitled to vote from having an opportunity of voting at the polling station.

Ballot papers

29. Every ballot paper to be used for voters who wish to vote shall be in both official languages and in the form set out in Annexure D hereto, and there shall be printed or written on every ballot paper in alphabetical order the names of all the duly nominated candidates at the election and their addresses and occupations.

No voter to vote more than once

30. A voter shall, whether or not his name appears on more than one voters' list or more than once on the same voters' list, be entitled to cast at an election one

Stemburo waar kieser moet stem

25. 'n Kieser wat binne die regsgebied van die Gemeenskapsraad stem, kan alleenlik stem by 'n stemburo vir die wyk waarin hy as kieser geregistreer is.

Verklaring van geheimhouding

26. (1) Die verkiesingsbeampte en elke voorsittende beampte, stemopnemer, kandidaat, agent, getuie of enige ander persoon of beampte (uitgesonderd 'n polisiebeampte) wat geregtig is om in 'n stemburo of by die tel van stemme teenwoordig te wees, moet voor die aanvang van die stemming, en elke telbeampte moet voor die aanvang van die tel van stemme, in die vorm vervat in Aanhangsel C hiervan, in duplikaat, 'n beëdigde verklaring van geheimhouding aflê voor 'n vrederegter of 'n kommissaris van ede, of voor die verkiesingsbeampte of 'n voorsittende beampte wat hierby gemagtig word om sodanige eed af te neem.

(2) Die oorspronklike verklaring van geheimhouding word aan die verkiesingsbeampte, voor die aanvang van die stemming of die begin van die tel van stemme, na gelang van die geval, deur die persoon wat dit afgelê het, oorhandig en sodanige persoon moet die duplikaat van sodanige verklaring van geheimhouding te alle tye gedurende die stemming of tel van stemme in sy besit hê en moet dit op aandrang aan die verkiesingsbeampte of die voorsittende beampte vir inspeksie toon.

Prosedure by stemming

27. Die voorsittende beampte, in teenwoordigheid van sodanige kandidate en agente as wat teenwoordig is, verseël—

(a) voor die aanvang van die stemming, elke stembus maar laat 'n opening oop waardeur stembriewe in die stembus ingesit kan word;

(b) by die sluiting van die stemming, die opening in paragraaf (a) bedoel.

Bevoegdhede van voorsittende beampte by 'n stemburo

28. (1) Die voorsittende beampte hou orde by 'n stemburo, reël hoeveel kiesers tegelyk binnegelaat word en hou alle ander persone, uitgesonderd die verkiesingsbeampte, die kandidate of hulle agente en polisiebeamptes en ander beamptes op diens, buite.

(2) Behoudens die uitsonderings wat by subregulasie (1) gemaak word, kan die voorsittende beampte enige persoon (uitgesonderd 'n persoon wat sy stem uitbring) aansê om die stemburo te verlaat en enige persoon wat versuim om dit te doen wanneer dit van hom vereis word, begaan 'n misdryf en kan op bevel van die voorsittende beampte sonder lasbrief in hegtenis geneem word.

(3) Die bevoegdhede by hierdie regulasie verleen, word nie so uitgeoefen dat dit 'n kieser wat andersins geregtig is om te stem, verhinder om sy stem by die stemburo uit te bring nie.

Stembriewe

29. Elke stembrief wat gebruik word deur kiesers wat wil stem, moet in albei amptelike tale wees en in die vorm vervat in Aanhangsel D hiervan en op elke stembrief moet die name staan van al die behoorlik genomineerde kandidate by die verkiesing in alfabetiese orde afgedruk of ingeskryf en hul adresse en beroepe.

Geen kieser mag meer as een maal stem nie

30. 'n Kieser is, ongeag of sy naam op meer as een kieserslys of meer as een maal op dieselfde kieserslys voorkom, geregtig om by 'n verkiesing slegs een stem

vote only and no voter shall be entitled to vote unless he has produced to the presiding officer or a polling officer his identity document.

Identification of voters

31. (1) Save as provided in regulation 36, no enquiry shall be made at an election as to the identity of any person or his right to vote, except that the presiding officer may himself, and if required by any candidate or an agent of any candidate shall, after any person has established his identity in the manner contemplated in regulation 30, and before he is allowed to vote, put to him either or both of the following questions, but no other, namely:

(a) Are you the person whose name appears as A.B. on the list of voters in this ward?

(b) Have you already voted at this election in this or any other ward?

(2) Any person who fails to establish his identity in the manner contemplated in regulation 30 or who does not answer the first question distinctly and absolutely in the affirmative and the second question distinctly and absolutely in the negative, shall not be permitted to vote.

(3) A person who makes a false answer to either of those questions shall be guilty of an offence.

(4) The presiding officer may make enquiry of any other presiding officer at any polling station for the purpose of verifying an answer to either of the two questions referred to in subregulation (1), and may further order the arrest without warrant of any person who is suspected by him on reasonable grounds of making a false answer to either of such questions or of committing the offence of personation as defined in regulation 57.

(5) Every person empowered by law to make arrests shall carry out such an order of the presiding officer.

Manner of voting

32. (1) The voting at all elections held in terms of the provisions of these Regulations shall be by secret ballot.

(2) Every person who wishes to vote shall apply to the presiding officer or a polling officer for a ballot paper and such officer shall, if he is satisfied that such person is entitled to vote in the ward concerned and after determining that no ballot paper has already been issued at that polling station to that person at such election, he shall—

(a) call out the serial number and name of the voter as it appears on the voters' list;

(b) enter the serial number in the appropriate space on the counterfoil of the ballot paper that is to be issued to the voter;

(c) tear out the ballot paper and stamp the official mark on the back thereof in the space provided;

(d) fold the ballot paper so that the front thereof is on the inside and the official mark is on the outside and hand it to the applicant; and

(e) on the voters' list, draw a line through the serial number, identity document number and name of the voter as proof that a ballot paper has been issued.

(3) When the voter has received such ballot paper he shall take it to the compartment provided for that purpose and signify for whom he desires to vote by secretly placing a cross opposite the name of the candidate for whom he wishes to vote. He shall then fold the ballot paper so that the official mark can be seen

uit te bring, en geen kieser is geregtig om te stem nie tensy hy sy identiteitsdokument aan die voorsittende beampte of 'n stemopnemer oorlê.

Identifikasie van kiesers

31. (1) Behoudens soos by regulasie 36 bepaal, word by 'n verkiesing geen navraag gedoen omtrent enige persoon se identiteit of sy reg om te stem nie, behalwe dat die voorsittende beampte nadat iemand sy identiteit op die wyse in regulasie 30 beoog, bewys het, en voordat hy toegelaat word om te stem, hom een van of albei die volgende vrae, en geen ander nie, uit eie beweging kan, en op versoek van 'n kandidaat of 'n agent van 'n kandidaat moet, stel, naamlik:

(a) Is u die persoon wie se naam as A.B. op die kieserslys van hierdie wyk voorkom?

(b) Het u reeds in hierdie verkiesing of in 'n ander wyk gestem?

(2) Iemand wat versuim om sy identiteit op die wyse in regulasie 30 beoog, te bewys, of wat nie die eerste vraag duidelik en sonder voorbehoud bevestigend en die tweede duidelik en sonder voorbehoud ontkennend beantwoord nie, word nie toegelaat om te stem nie.

(3) Iemand wat op enigeen van daardie vrae 'n valse antwoord gee, is aan 'n misdryf skuldig.

(4) Die voorsittende beampte kan by 'n ander voorsittende beampte by enige stemburo navraag doen ten einde die waarheid van 'n antwoord op enigeen van die vrae in subregulasie (1) bedoel te toets en kan verder beveel dat enigiemand wat hy op redelike gronde verdink daarvan dat hy op enigeen van bedoelde vrae 'n valse antwoord gegee het, of hom skuldig maak aan die misdryf om hom vir 'n ander uit te gee, soos in regulasie 57 omskryf, sonder lasbrief in hegtenis geneem word.

(5) Iedereen wat regtens bevoeg is tot inhegtenisneming, voer so 'n bevel van die voorsittende beampte uit.

Wyse waarop gestem word

32. (1) Die stemming by alle verkiesings wat kragtens die bepalings van hierdie Regulasies gehou word, geskied by geheime stemming.

(2) Elke persoon wat wil stem, doen aansoek om 'n stembrief by die voorsittende beampte of 'n stemopnemer en sodanige beampte of stemopnemer, indien hy oortuig is dat sodanige persoon geregtig is om in die betrokke wyk te stem en nadat hy vasgestel het dat geen stembrief reeds aan daardie persoon by daardie stemburo by sodanige verkiesing uitgereik is nie, moet hy—

(a) die volgnommer en naam van die kieser soos dit op die kieserslys voorkom, uitroep;

(b) die volgnommer in die toepaslike ruimte op die teenblad van die stembrief wat aan die kieser uitgereik gaan word, inskryf;

(c) die stembrief uitskeur en dit op die keersy in die ruimte voorsien met die amptelike merk, merk;

(d) die stembrief vou sodat die voorkant daarvan aan die binnekant en die amptelike merk aan die buitekant is en dit aan die kieser oorhandig; en

(e) op die kieserslys 'n streep trek deur die volgnommer, identiteitsdokumentnommer en naam van die kieser, as bewys dat 'n stembrief uitgereik is.

(3) Wanneer die kieser sodanige stembrief ontvang, neem hy dit na die stemhokkie wat vir dié doel verskaf is en dui aan vir wie hy stem deur in die geheim 'n kruisie teenoor die naam van die kandidaat vir wie hy wil stem, aan te bring. Hy vou dan die stembrief sodat

and having held up the ballot paper so that the presiding officer or polling officer can recognise the official mark, shall drop the ballot paper in the ballot box placed in front of the presiding officer or polling officer.

(4) If the ballot paper that is about to be dropped into the ballot box has inadvertently not been marked with the official mark, the presiding officer or polling officer may cause such ballot paper to be so marked.

(5) If the presiding officer or polling officer has any reason to doubt that a ballot paper in the possession of a voter is the ballot paper issued to him, he may, for the purpose of comparing the numbers printed on the ballot paper and the counterfoil, request the voter to show him the number and official mark appearing on the back of the ballot paper and the voter shall do so.

(6) The voter shall vote without undue delay and shall leave the polling station as soon as he has put his ballot paper into the ballot box.

Voters who are unable to vote in the manner prescribed

33. (1) Any voter who is unable to vote in the prescribed manner may request the presiding officer or polling officer to complete his ballot paper on his behalf.

(2) Such presiding officer or polling officer, as the case may be, shall thereupon, with due regard to the maintenance of secrecy and in the presence of one witness and a person of the voter's own choice who shall accompany him, read to such voter the names of the candidates for the particular ward and affix a cross in the space provided on the ballot paper opposite the name of the candidate selected by word of mouth by such voter and shall thereafter fold the ballot paper and put it into the ballot box.

(3) In the performance of his functions under this regulation such polling officer shall disregard any document or thing exhibited or produced by or in the possession of the voter which indicates or suggests or purports to indicate or suggest the name of any candidate for whom such voter is or is not to vote.

Spoilt ballot papers

34. If a voter inadvertently spoils a ballot paper he may return it to the presiding officer or polling officer who, if he is satisfied of such inadvertence, shall give him another ballot paper and retain the spoilt ballot paper which he shall immediately cancel and endorse with the words "returned under regulation 34" and the fact of such cancellation shall be noted upon the counterfoil.

Tendered ballot papers

35. If a person representing himself to be a particular voter applies for a ballot paper after another person has voted in his name, the applicant shall, upon duly answering the questions permitted by regulation 31 to be asked of voters at the time of polling, be entitled to mark a ballot paper in the same manner as any other voter, but the ballot paper shall not be put into the ballot box but shall be given to the presiding officer, endorsed by him with the name of the voter and his serial number on the voters' list and set aside in a separate packet.

die amptelike merk sigbaar is en nadat hy die stembrief só opgehou het dat die voorsittende beampte of stemopnemer die amptelike merk kan herken, laat hy die stembrief val in die stembus wat voor die voorsittende beampte of stemopnemer staan.

(4) Indien die stembrief wat in die stembus ingesit staan te word, onopsetlik nie met die amptelike merk gemerk is nie, kan die voorsittende beampte of stemopnemer sodanige stembrief aldus laat merk.

(5) Indien die voorsittende beampte of stemopnemer om enige rede twyfel of 'n stembrief in besit van 'n kieser die stembrief is wat aan hom uitgereik is, kan hy, met die doel om die nommers gedruk op die stembrief en die teenblad te vergelyk, die kieser versoek om die nommer en amptelike merk op die keersy van die stembrief aan hom te toon, en die kieser moet dit doen.

(6) Die kieser moet sonder onnodige versuim sy stem uitbring en die stemburo verlaat sodra hy sy stembrief in die stembus geplaas het.

Kiesers wat nie in staat is om op die voorgeskrewe wyse te stem nie

33. (1) Enige kieser wat nie in staat is om sy stem op die voorgeskrewe wyse uit te bring nie, kan die verkiesingsbeampte of stemopnemer versoek om sy stembrief namens hom in te vul.

(2) Sodanige verkiesingsbeampte of stemopnemer, na gelang van die geval, moet daarop met behoorlike inagneming van die handhawing van geheimhouding en in teenwoordigheid van een getuie en 'n persoon van die kieser se eie keuse wat hom moet vergesel, aan sodanige kieser die name van die kandidate vir die bepaalde wyk voorlees en 'n kruis in die ruimte op die stembrief aanbring teenoor die naam van die kandidaat wat mondeling deur sodanige kieser gekies is, en moet daarna die stembrief vou en dit in die stembus plaas.

(3) By die verrigting van sy werksaamhede ingevolge hierdie regulasie moet sodanige stemopnemer enige dokument of ding verontagsaam wat deur die kieser vertoon of getoon word of in die kieser se besit is en wat die naam van enige kandidaat vir wie sodanige kieser moet stem of nie moet stem nie, aandui of suggereer of veronderstel is om dit aan te dui of te suggereer.

Bedorwe stembriewe

Indien 'n kieser onopsetlik 'n stembrief bederf, sy dit aan die voorsittende beampte of stemopnemer teruggee, en as laasgenoemde daarvan oortuig is dat dit onopsetlik gebeur het, gee hy hom 'n ander stembrief en behou hy die bedorwe stembrief wat hy onmiddellik kanselleer en teken hy die woorde "teruggegee kragtens regulasie 34" daarop aan, en die feit dat dit aldus gekanselleer is, word op die teenblad aangeteken.

Aangebode stembriewe

35. Indien iemand wat voorgee dat hy 'n bepaalde kieser is, om 'n stembrief aansoek doen nadat 'n ander persoon in sy naam gestem het, is die aansoeker, nadat hy behoorlik geantwoord het op die vrae wat volgens regulasie 31 tydens die stemming aan kiesers gestel kan word, geregtig om 'n stembrief te merk op dieselfde wyse as enige ander kieser, maar die stembrief word nie in die stembus geplaas nie, maar word aan die voorsittende beampte gegee en deur hom met die naam van die kieser en sy volgnommer geëndosseer en eenkant gesit in 'n afsonderlike pakket.

Circumstances under which ballot paper may be refused by presiding officer

36. (1) If any candidate or an agent of any candidate or any voter makes before the presiding officer a declaration on oath stating that a person enrolled on the voters' list is dead or is so incapacitated by sickness, absence or otherwise, that it is impossible for such person to be present at the polling station to record his vote at the election then being held, the presiding officer shall refuse to hand a ballot paper to any person who applies for the same in the name of the person who is the subject of the declaration unless the person so applying proves his identity to the satisfaction of the presiding officer or makes a declaration on oath before the presiding officer that he is the person whose name appears on the voters' list for the ward and that the statements made in the first-mentioned declaration (which shall be read over to him) are false.

(2) The presiding officer is hereby authorised and required to administer any such oath as is required by subregulation (1).

(3) Any person who makes any false statement in any declaration referred to in subregulation (1), knowing the statement to be false, shall be guilty of an offence.

(4) More than one person may be referred to in any declaration on oath made under subregulation (1), provided the reason why each of the persons referred to is unable to attend at a polling station can be clearly connected with the person to whom the declaration relates.

Sealing of ballot boxes, etc.

37. (1) Every presiding officer shall, immediately after the close of the poll, in the presence of such candidates or their agents (if any) as may be in attendance, make up into separate packets, sealed with his own seal and with the seals of those candidates or agents (if any) who desire to affix their seals—

(a) each ballot box entrusted to him, unopened;

(b) the unused and spoiled ballot papers;

(c) the counterfoils of all used ballot papers; and

(d) tendered ballot papers;

and shall forthwith deliver or cause to be delivered the packets to the electoral officer.

(2) The packets shall be accompanied by a return made by the presiding officer, in the form contained in Annexure E hereto, showing the number of ballot papers entrusted to him and accounting for them under the heads of "Ballot papers in the ballot box", "Unused ballot papers", "Spoiled ballot papers" and "Tendered ballot papers".

(3) A label in the form contained in Annexure F hereto shall be affixed to each of the packets mentioned in subregulation (1) and to the return mentioned in subregulation (2).

Action to be taken by the electoral officer upon receipt of ballot papers

38. The electoral officer shall upon receipt of voters' ballot papers retain such ballot papers unopened in safe custody until the counting of votes.

Verification of ballot paper return

39. (1) The electoral officer shall, upon receipt of all the packets and ballot boxes from every presiding officer, and not before, examine whether the seals are

Omstandighede waaronder voorsittende beampte 'n stembrief kan weier

36. (1) Indien 'n kandidaat of 'n agent van 'n kandidaat of 'n kieser voor die voorsittende beampte 'n beëdigde verklaring aflê dat 'n persoon wat in die kieserslys ingeskryf is, oorlede is of dat bedoelde persoon weens siekte, afwesigheid of om 'n ander rede onmoontlik by die stemburo teenwoordig kan wees om by die verkiesing wat dan gehou word, sy stem uit te bring, weier die voorsittende beampte om 'n stembrief uit te reik aan enigiemand wat daarom aansoek doen in naam van die persoon op wie die verklaring betrekking het, tensy die persoon wat aldus aansoek doen sy identiteit tot tevredenheid van die voorsittende beampte bewys of voor die voorsittende beampte 'n beëdigde verklaring aflê dat hy die persoon is wie se naam op die kieserslys vir die wyk voorkom en dat die bewerings in eersbedoelde verklaring (wat aan hom voorgelees moet word) vals is.

(2) Aan die voorsittende beampte word hierby die bevoegdheid verleen en die verpligting opgelê om 'n in subregulasie (1) bedoelde eed af te neem.

(3) Iemand wat in 'n in subregulasie (1) bedoelde verklaring 'n valse verklaring doen, wetende dat dit vals is, is aan 'n misdryf skuldig.

(4) In 'n beëdigde verklaring ingevolge subregulasie (1) afgelê, kan na meer as een persoon verwys word, mits die rede waarom elkeen van die persone na wie verwys word, nie by die stemburo kan wees nie, duidelik met die persoon op wie die verklaring betrekking het, verbind kan word.

Verseëling van stembusse, ens.

37. (1) Elke stemopnemer maak onmiddellik na die sluiting van die stemming, in teenwoordigheid van sodanige kandidate of hulle agente (as daar is) as wat aanwesig is, afsonderlike pakkette, verseël met sy eie seël en met die seëls van dié kandidate of hulle agente (as daar is) wat hulle seëls ook daarop wil afdruk, van—

(a) elke stembus wat aan hom toevertrou is, onoopgemaak;

(b) die ongebruikte en die bedorwe stembriewe;

(c) die teenblaaie van alle gebruikte stembriewe; en

(d) aangebode stembriewe;

en lewer die pakkette onverwyld aan die verkiesingsbeampte af of laat hulle aan hom aflewer.

(2) Die pakkette gaan vergesel van 'n opgawe in die vorm vervat in Aanhangsel E hiervan deur die voorsittende beampte verstrek waarin hy die getal stembriewe aan hom toevertrou noem en waarin hy van hulle rekenskap gee onder die hoofde "Stembriewe in die stembus", "Ongebruikte stembriewe", "Bedorwe stembriewe" en "Aangebode stembriewe".

(3) Elkeen van die pakkette in subregulasie (1) genoem en die opgawe in subregulasie (2) genoem, word voorsien van 'n etiket in die vorm vervat in Aanhangsel F hiervan.

Optrede deur verkiesingsbeampte by ontvangs van stembriewe

38. Elke verkiesingsbeampte moet by ontvangs van kiesers se stembriewe sodanige stembriewe onoopgemaak in veilige bewaring hou totdat die stemme getel word.

Verifiëring van stembriefopgawe

39. (1) By ontvangs deur die verkiesingsbeampte van al die pakkette en stembusse van iedere voorsittende beampte, en nie eerder nie, ondersoek hy of die seëls

University of Fort Hare
Together in Excellence

in order and afford such candidates or their agents as may be in attendance an opportunity to do the same and after that open the sealed packets containing the ballot paper return and shall open each ballot box and verify the number of ballot papers in the ballot box according to the ballot paper return given by each presiding officer by comparing it with the number of ballot papers in each such ballot box.

(2) When the electoral officer has completed the verification of the ballot papers in the ballot boxes for each polling station, and whether or not the number of ballot papers in the ballot boxes is found to correspond with the number appearing on the return, he shall in the presence of such candidates or their agents as may be present mix together the ballot papers contained in all the ballot boxes for a particular ward so that it is impossible to determine from which ballot box any particular ballot paper was taken.

(3) The electoral officer shall, after scrutinising the official mark on the ballot papers, proceed to count or cause to be counted the votes and while counting the votes shall cause the ballot papers to be kept with their faces upwards.

Manner of counting votes

40. The ballot papers shall, for the purposes of counting, be fastened together in packets of 50 (to each of which a distinctive number shall be assigned) and thereafter the number of votes for each candidate shall be recorded and checked.

Ballot papers to be rejected

41. (1) The electoral officer shall reject and not count any ballot paper—

(a) which does not bear the official mark;

(b) on which votes are cast for more than one candidate;

(c) which is unmarked or invalid owing to uncertainty;

(d) which bears any writing or mark by which a voter can be identified otherwise than in these Regulations prescribed.

(2) Subject to the provisions of subregulation (1), the electoral officer shall not reject any ballot paper on which a voter has clearly indicated, in a manner other than by means of a cross, for which candidate he has voted.

(3) The electoral officer shall endorse the word "rejected" on a ballot paper which he may reject as invalid.

Objection against acceptance or rejection of a ballot paper

42. (1) If a candidate or an agent objects to the acceptance of any ballot paper, the electoral officer shall endorse the words "objection raised against acceptance" on such ballot paper.

(2) If a candidate or an agent objects to the rejection of any ballot paper, the electoral officer shall endorse the words "objection raised against rejection" on such ballot paper.

Determination of successful candidate in event of equal number of votes

43. In the event of the number of votes being found to be equal for the candidates who obtained the greater or the greatest number of votes, the electoral officer shall by lot determine the successful candidate.

in orde is en gee hy sodanige kandidate of hulle agente as wat aanwesig is 'n geleentheid om dieselfde te doen, en daarna maak hy die verseëlde pakkette oop wat die opgawe van stembriewe bevat, en maak hy elke stembus oop en verifieer hy die getal stembriewe in die stembus ooreenkomstig die stembriefopgawe wat deur elke voorsittende beampte ingelewer is deur dit met die getal stembriewe in elke sodanige stembus te vergelyk.

(2) Wanneer die verkiesingsbeampte die verifiëring van die stembriewe in die stembusse vir elke stemburo uitgevoer het, maak hy, afgesien daarvan of die getal stembriewe in die stembusse klop met die getal wat op die opgawe voorkom al dan nie, in teenwoordigheid van sodanige kandidate of hulle agente as wat aanwesig is, die stembriewe uit al die stembusse vir 'n besondere wyk op so 'n wyse deurmekaar dat dit onmoontlik is om te bepaal uit watter stembus 'n bepaalde stembrief geneem is.

(3) Nadat hy die amptelike merk op die stembriewe nagegaan het, gaan die verkiesingsbeampte oor tot die tel van die stemme en terwyl hy die stemme tel of laat tel, laat hy die stembriewe met hulle voorkant na bo hou.

Wyse waarop stemme getel moet word

40. Vir die doel van die tel van stemme word die stembriewe in pakkette van 50 vasgebind (aan elkeen waarvan 'n onderskeidende nommer toegeken word) en daarna word die getal stemme ten opsigte van elke kandidaat opgeskryf en nagegaan.

Stembriewe wat verwerp moet word

41. (1) Die verkiesingsbeampte verwerp en tel nie 'n stembrief nie—

(a) wat nie die amptelike merk daarop het nie;

(b) waarop stemme op meer as een kandidaat uitgebring is;

(c) wat ongemerk of weens onsekerheid ongeldig is;

(d) wat enige skrif of merk daarop het waardeur 'n kieser op 'n ander wyse as dié in hierdie Regulasies voorgeskryf, geïdentifiseer kan word.

(2) Behoudens die bepalings van subregulasie (1), verwerp die verkiesingsbeampte nie 'n stembrief waarop 'n kieser op 'n ander wyse as by wyse van 'n kruis duidelik aangedui het vir watter kandidaat hy stem nie.

(3) Die verkiesingsbeampte endosseer die woord "verwerp" op 'n stembrief wat hy as ongeldig verwerp.

Beswaar teen aanname of verwerping van stembrief

42. (1) Indien 'n kandidaat of 'n agent beswaar maak teen die aanname van 'n stembrief, endosseer die verkiesingsbeampte die woorde "beswaar geopper teen aanname" op sodanige stembrief.

(2) Indien 'n kandidaat of 'n agent beswaar maak teen die verwerping van 'n stembrief, endosseer die verkiesingsbeampte die woorde "beswaar geopper teen verwerping" op sodanige stembrief.

Bepaling van suksesvolle kandidaat in geval van staking van stemme

43. Ingeval daar bevind word dat eweveel stemme uitgebring is op die kandidate wat die grootste getal stemme verkry het, bepaal die verkiesingsbeampte die suksesvolle kandidaat deur loting.

IN LUMINE TUO VIDEBIMUS LUMEN
University of Fort Hare
Together in Excellence

Result of election

44. The electoral officer shall, as soon as possible after determining which candidate has obtained the greater or the greatest number of votes in each ward, in public declare such candidates duly elected and shall make known the number of votes polled by each candidate.

Publication of names of elected members

45. (1) As soon as possible after the name of the candidates duly elected as members of the Community Council are known the electoral officer shall cause to be displayed on the notice board of each township manager's office situated in the area for which the Community Council has been established a list reflecting the full name of every member so elected together with the date on which he was duly elected, the name of the ward which such member represents and the total number of votes cast in favour of such member.

(2) A notice displayed in terms of subregulation (1) shall also reflect the names of the unsuccessful candidates in respect of each ward and the total number of votes cast in favour of each such candidate, as well as the number of rejected ballot papers in respect of each ward.

Disposal of electoral matter by electoral officer after the counting of votes has been completed

46. (1) The electoral officer shall after the completion of the counting of votes make up into separate packets the following:

(a) All unused, tendered and spoiled ballot papers used at each polling station;

(b) all counted ballot papers in respect of each ward;

(c) all rejected ballot papers in respect of each ward; and

(d) all ballot paper returns duly endorsed with his findings on the verification of such returns.

(2) The electoral officer shall—

(a) affix a label in the form contained in Annexure F hereto to each of the packets mentioned in subregulation (1);

(b) seal each such packet with his own seal and with the seals of such candidates and agents (if any) as may desire to affix their seals; and

(c) retain such packets for a period of six months and thereafter destroy them.

Immaterial mistakes not to affect validity of election

47. No election shall be invalid by reason of any mistake or non-compliance with the provisions of these Regulations if the election was conducted in accordance with the principles laid down herein and such mistake or non-compliance did not affect the result.

Evidence of election being held

48. Upon any charge of a corrupt or illegal practice or any other offence under these Regulations alleged to have been committed at or in connection with an election, the certificate of the electoral officer that the election mentioned therein was being or had been held shall be sufficient evidence of the fact that such election was being or had been held.

Sundays and public holidays

49. Whenever under these Regulations anything is required to be commenced, concluded or done on a particular date, and that date happens to fall upon a

Uitslag van verkiesing

44. Die verkiesingsbeampte verklaar in die openbaar, so gou moontlik nadat hy bepaal het watter kandidaat die grootste getal stemme in elke wyk verkry het, sodanige kandidate behoorlik verkose en maak die getal stemme bekend wat op elke kandidaat uitgebring is.

Bekendmaking van name van verkose lede

45. (1) Sodra die name van die kandidate wat behoorlik as lede van die Gemeenskapsraad verkies is, bekend is, laat die verkiesingsbeampte 'n lys bevattende die volle naam van elke kandidaat aldus verkies tesame met die datum waarop hy behoorlik verkies is, die naam van die wyk wat sodanige lid verteenwoordig en die totale getal stemme wat ten gunste van sodanige lid uitgebring is, op die aanplakbord van elke dorpsbestuurder se kantoor wat in sodanige gebied geleë is, vertoon.

(2) 'n Kennisgewing ingevolge subregulasie (1) vertoon, dui ook die name van die onsuksesvolle kandidate ten opsigte van elke wyk en die totale getal stemme aan wat ten opsigte van elke sodanige kandidaat uitgebring is, asook die getal bedorwe stembriewe ten opsigte van elke wyk.

Beskikking oor verkiesingstukke deur verkiesingsbeampte na afloop van tel van stemme

46. (1) Na afloop van die tel van die stemme maak die verkiesingsbeampte die volgende in afsonderlike pakkette op:

(a) Alle ongebruikte, aangebode en bedorwe stembriewe wat by elke stemburo gebruik is;

(b) alle getelde stembriewe met betrekking tot elke wyk;

(c) alle verworpe stembriewe met betrekking tot elke wyk; en

(d) alle stembriefopgawes behoorlik geëndosseer met sy bevindings betreffende die verifiëring van sodanige opgawes.

(2) Die verkiesingsbeampte—

(a) voorsien elke pakket genoem in subregulasie (1) van 'n etiket in die vorm vervat in Aanhangsel F hiervan;

(b) verseël elke sodanige pakket met sy eie seël en met die seëls van sodanige kandidate en agente (as daar is) as wat hulle seëls ook daarop wil afdruk; en

(c) bewaar sodanige pakkette vir 'n tydperk van ses maande en vernietig hulle daarna.

Onbelangrike foute raak nie geldigheid van verkiesing nie

47. Geen verkiesing is weens 'n fout of nie-nakoming van die bepalings van hierdie Regulasies ongeldig nie indien die verkiesing gehou is ooreenkomstig die beginsels hierin voorgeskryf en sodanige fout of nie-nakoming nie die uitslag geraak het nie.

Bewys dat verkiesing gehou is

48. By 'n aanklag van 'n korrupte of onwettige bedrywigheid of van 'n ander misdryf ingevolge hierdie Regulasies, wat volgens bewering by of in verband met 'n verkiesing begaan is, is die sertifikaat van die verkiesingsbeampte dat die verkiesing daarin gemeld aan die gang was of gehou is, voldoende bewys van die feit dat sodanige verkiesing aan die gang was of gehou is.

Sondae en openbare feesdae

49. Wanneer enigiets op 'n bepaalde datum ingevolge hierdie Regulasies begin, voltooi of gedoen moet word, en daardie datum op 'n Sondag val of op 'n

Sunday or a day declared by or under any law to be a public holiday, such thing shall be commenced, concluded or done on the date next succeeding such Sunday or public holiday or if the last-mentioned date is also a Sunday or public holiday, then on the date next succeeding such Sunday or public holiday.

Interrupting or disturbing proceedings at elections

50. Any person who wilfully interrupts, obstructs or disturbs any proceedings in connection with the conduct of elections in terms of the provisions of these Regulations of who on polling day uses any form of loudspeaker or forms or organises any procession of or demonstration by persons other than for official purposes, shall be guilty of an offence.

Fraud in connection with ballot papers, etc.

51. (1) Any person who—

(a) forges or counterfeits or fraudulently destroys any ballot paper or the official mark on any ballot paper;

(b) without due authority supplies a ballot paper to any person;

(c) fraudulently puts into any ballot box any paper other than the ballot paper which he is authorised by law to put in;

(d) fraudulently takes out of the polling station any ballot paper; or

(e) without due authority destroys, takes, opens or otherwise interferes with any ballot box or packet of ballot papers then in use for the purpose of the election;

shall be guilty of an offence.

(2) In any indictment, summons or charge for an offence in relation to ballot boxes, ballot papers and official marking instruments at an election, the property in such boxes, papers and instruments as well as the property in the counterfoils, may be stated to be in the electoral officer.

(3) If the electoral officer is so indicted or charged such property may be stated to be in the Community Council.

Infringement of secrecy

52. (1) Every officer, candidate or his agent in attendance at a polling station or at the counting of votes, shall maintain, and aid in maintaining, the secrecy of the voting in that station and shall not communicate, except for some purpose authorised by law, to any person any information likely to defeat the secrecy of the voting.

(2) No person, except as in these Regulations provided, shall interfere with or attempt to interfere with a voter when such voter is marking his ballot paper, or otherwise attempt to obtain information as to the candidate for whom any voter is about to vote or has voted, or communicate at any time to any person any information obtained as to the candidate for whom any voter is about to vote or has voted at a taking of poll under these Regulations.

(3) No person shall directly or indirectly induce any voter to display his ballot paper, after he has marked the same, in such a manner as to make known to any person the name of the candidate for whom the voter has so marked his ballot paper.

dag wat by of kragtens 'n wet tot 'n openbare feesdag verklaar is, moet dit begin, voltooi of gedoen word op die eersvolgende datum na sodanige Sondag of openbare feesdag, of as laasgenoemde datum ook op 'n Sondag of openbare feesdag val, dan op die eersvolgende datum na sodanige Sondag of openbare feesdag.

Onderbreking of steuring van verrigtings by verkiesings

50. 'n Persoon wat opsetlik verrigtings in verband met die hou van verkiesings ooreenkomstig die bepalings van hierdie Regulasies onderbreek, belemmer of versteur, of op stemdag enige vorm van luidspreker gebruik of enige optog van, of betoging deur, persone vorm of reël, uitgesonderd vir amptelike doeleindes, begaan 'n misdryf.

Bedrog met stembriewe, ens.

51. (1) 'n Persoon wat—

(a) 'n stembrief of die amptelike merk op 'n stembrief vervals, namaak of met opset om te bedrieg vernietig;

(b) sonder behoorlike magtiging 'n ander persoon van 'n stembrief voorsien;

(c) met opset om te bedrieg, enige ander stuk papier in 'n stembus plaas as die stembrief wat hy regtens daarin mag plaas;

(d) met opset om te bedrieg, 'n stembrief uit die stemburo wegneem; of

(e) sonder behoorlike magtiging 'n stembus of pakket stembriewe wat dan vir die doel van die verkiesing in gebruik is, vernietig, neem, oopmaak of hom op 'n ander wyse daarmee bemoei;

begaan 'n misdryf.

(2) In 'n akte van beskuldiging, dagvaarding of aanklag weens 'n misdryf met betrekking tot stembusse, stembriewe en amptelike merkinstrumente by 'n verkiesing kan verklaar word dat die eiendomsreg op die busse, stembriewe en instrumente, asook op die teenblaaie, by die verkiesingsbeampte by die verkiesing berus.

(3) Word die verkiesingsbeampte aldus beskuldig of aangeklo, kan verklaar word dat die eiendomsreg by die Gemeenskapsraad berus.

Skending van geheimhouding

52. (1) Iedere beampte, kandidaat of sy agent wat by 'n stemburo of by die tel van stemme aanwesig is, moet die geheimhouding van die stemming in daardie buro handhaaf en help om dit te handhaaf en mag aan geen persoon, uitgesonderd vir die een of ander regtens geoorloofde doel, enige inligting meedeel wat waarskynlik die geheimhouding van die stemming sal verydel nie.

(2) Behoudens die bepalings van hierdie Regulasies, mag geen persoon hom met 'n kieser bemoei of probeer om hom met 'n kieser te bemoei wanneer sodanige kieser sy stembrief merk nie, of andersins by 'n stemming kragtens hierdie Regulasies probeer om te wete te kom vir watter kandidaat 'n kieser op die punt staan om te stem of gestem het nie of te eniger tyd aan enige persoon meedeel vir watter kandidaat, volgens inligting wat verkry is, 'n kieser op die punt staan om te stem of gestem het nie.

(3) Geen persoon mag direk of indirek enige kieser beweeg om sy stembrief, nadat hy dit gemerk het, op so 'n wyse te vertoon dat enige persoon die naam van die kandidaat vir wie hy sy stembrief aldus gemerk het, te wete kom nie.

(4) No person shall place upon any ballot paper any mark or writing whereby a person who casts his vote on that ballot paper may be identified.

(5) Every person in attendance at the counting of votes shall maintain, and aid in maintaining, the secrecy of the voting, and shall not attempt to ascertain or communicate any information obtained at such counting as to the candidate for whom any vote is cast in any particular ballot paper.

(6) A person who has, in carrying out his duties under these Regulations, obtained knowledge as to the candidate for whom any other person has voted shall not, except in answer to a question lawfully put to him in the course of proceedings in a competent court, disclose such knowledge.

(7) Any person who contravenes or fails to comply with any provision of this regulation shall be guilty of an offence.

Failure by electoral officer or other officer to perform his duties

53. If the electoral officer or any other officer or person wilfully fails to perform any of the duties which he is required to perform under the provisions of these Regulations, he shall be guilty of an offence.

Treating

54. Any person who corruptly by himself or by any other person either before, during or after an election, directly or indirectly gives or provides, or pays wholly or in part the expense of giving or providing, any food, drink, entertainment, lodging or provisions to or for any person for the purpose of corruptly influencing that person or any other person to cast or refrain from casting his vote at an election, or on account of such person or any other person having voted or refrained from voting, or being about to vote or refrain from voting at such election, shall be guilty of the offence of treating.

Undue influence

55. (1) Any person who directly or indirectly by himself or by any other person makes use or threatens to make use of any force, violence or restraint or inflicts or threatens to inflict any temporal or spiritual injury, damage, harm or loss upon or against, or does or threatens to do anything to the disadvantage of any person in order to induce or compel that person to vote or refrain from voting, or on account of that person having voted or refrained from voting at any election, shall be guilty of the offence of undue influence.

(2) Any person who, by abduction, duress or fraudulent device or contrivance, impedes or prevents the free exercise of the franchise by any voter or thereby compels, induces or prevails upon any voter either to cast or to refrain from casting his vote at any election, shall be guilty of the offence of undue influence.

Bribery

56. (1) Any person shall be guilty of the offence of bribery if he, directly or indirectly, by himself or by any other person—

(a) gives, lends or procures, or agrees to give, lend or procure, or offers, promises, or promises to procure or to endeavour to procure any money or any other thing, to or for any voter, or to or for any person on behalf of any voter, or to or for any other person, in order to induce any voter to vote or refrain from voting, or corruptly does any such act as aforesaid on account of such voter having voted or refrained from voting at any election;

(4) Geen persoon mag op 'n stembrief enige merk of skrif aanbring waardeur 'n persoon wat met daardie stembrief stem, geïdentifiseer kan word nie.

(5) Iedere persoon wat by die tel van die stemme aanwesig is, moet die geheimhouding van die stemming handhaaf en help om dit te handhaaf, en mag nie probeer vasstel of aan 'n ander persoon meedeel vir watter kandidaat, volgens inligting wat by sodanige telling verkry is, op 'n bepaalde stembrief 'n stem uitgebring is nie.

(6) 'n Persoon wat by die vervulling van sy pligte kragtens hierdie Regulasies te wete gekom het op watter kandidaat enige ander persoon sy stem uitgebring het, mag sodanige kennis nie bekendmaak nie, uitgesonderd in antwoord op 'n vraag wat wettiglik aan hom gestel is in die loop van verrigtings in 'n bevoegde hof.

(7) 'n Persoon wat enige van die bepalings van hierdie regulasie oortree of versuim om daaraan te voldoen, begaan 'n misdryf.

Versuim deur verkiesingsbeampte of ander beampte om sy pligte te vervul

53. Indien die verkiesingsbeampte of enige ander beampte of persoon opsetlik versuim om enige van die pligte te vervul wat kragtens die bepalings van hierdie Regulasies hom opgelê is, begaan hy 'n misdryf.

Trakteerdery

54. 'n Persoon wat korruptelik, hetsy voor, gedurende of na 'n verkiesing, self of deur 'n ander persoon direk of indirek aan of vir enige persoon voedsel, drank, vermaak, inwoning of lewensmiddele gee of verskaf of die koste om dit te gee of te verskaf, of 'n deel daarvan, betaal, met die doel om daardie persoon of 'n ander persoon korruptelik te beïnvloed om sy stem by die verkiesing uit te bring al dan nie, of omdat daardie persoon of 'n ander persoon sy stem by die verkiesing uitgebring het of gaan uitbring al dan nie, begaan die misdryf van trakteerdery.

Onbehoorlike beïnvloeding

55. (1) 'n Persoon wat, self of deur 'n ander persoon, direk of indirek teen enige persoon geweld of dwang gebruik of dreig om te gebruik, of aan enige persoon enige wêreldlike of geestelike leed, skade, kwaad of verlies berokken of dreig om dit te berokken of iets ten nadele van enige persoon doen of dreig om dit te doen, ten einde daardie persoon te beweeg of te dwing om sy stem by 'n verkiesing uit te bring al dan nie, of omdat hy sy stem by 'n verkiesing uitgebring het al dan nie, begaan die misdryf van onbehoorlike beïnvloeding.

(2) 'n Persoon wat deur ontvoering, dwang of enige bedrieglike middel die vrye uitoefening van die stemreg deur 'n kieser belemmer of belet of 'n kieser daardeur dwing, beweeg of oorhaal om sy stem by 'n verkiesing uit te bring al dan nie, begaan die misdryf van onbehoorlike beïnvloeding.

Omkopery

56. (1) 'n Persoon begaan die misdryf van omkopery indien hy, self of deur 'n ander, direk of indirek—

(a) aan of vir 'n kieser, of aan of vir 'n persoon ten behoewe van 'n kieser, of aan of vir enige ander persoon, enige geld of enigiets anders gee, leen of verkry of ooreenkom om dit te gee, te leen of te verkry of dit aanbied, beloof of beloof om dit te verkry of om te probeer om te verkry, ten einde 'n kieser te beweeg om sy stem by 'n verkiesing uit te bring al dan nie, of korruptelik een van voormelde handelinge verrig omdat die kieser sy stem by 'n verkiesing uitgebring het al dan nie;

(b) gives, lends or agrees to give or lend, or offers, or promises to procure or to endeavour to procure any money or any other thing to or for any voter, or to or for any person on behalf of any voter, or to or for any other person, for acting or joining in any procession or demonstration before, during or after any election;

(c) makes any such gift, loan, offer, promise, procurement or agreement to or for any person in order to induce such person to procure or endeavour to procure, the return of any candidate at any election or the vote of any voter at an election;

(d) upon or in consequence of any such gift, loan, offer, promise, procurement or agreement, procures, or engages, promises or endeavours to procure, the return of any candidate at any election or the vote of any voter at any election;

(e) advances or pays, or causes to be advanced or paid, any money, to, or for the use of, any other person with the intent that such money, or any part thereof, shall be expended in bribery at any election, or knowingly pays, or causes to be paid, any money to any person in discharge or repayment of any money wholly or in part expended in bribery at any election;

(f) before or during any election, receives or contracts for any money or loan, for himself or for any other person, for voting or agreeing to vote, or for refraining or agreeing to refrain from voting, at any election;

(g) after any election receives any money on account of any person having voted or refrained from voting or having induced any other person to vote or refrain from voting at any election; or

(h) conveys or transfers or is concerned with the conveyance or transfer of any property, or pays or is concerned with the payment of any money, to any person for the purpose of enabling him to vote, thereby to influence his vote at any future election, or pays or is concerned with the payment of any money on behalf of any voter for the purpose of inducing him to vote or refrain from voting.

(2) Nothing in this regulation contained shall be construed as applying to any money paid or agreed to be paid for or on account of any electoral expenditure bona fide and lawfully incurred.

Personation

57. Any person who—

(a) at any election applies for a ballot paper in the name of some other person, whether living, dead or fictitious; or

(b) having voted once at any election, applies again at any polling station at the same election for a ballot paper;

shall be guilty of the offence of personation.

Corrupt procurement of candidature or withdrawal thereof

58. Any person who—

(a) corruptly induces or procures any other person to become a candidate or to withdraw as a candidate at any election in consideration of any payment or promise of any nature;

(b) becomes a candidate or withdraws as a candidate at any election in pursuance of such inducement or procurement; or

(b) aan of vir 'n kieser, of aan of vir 'n persoon ten behoewe van 'n kieser, of aan of vir enige ander persoon, enige geld of enigiets anders gee of leen, of ooreenkom om dit te gee of te leen, of dit aanbied, of beloof om dit te verkry of om te probeer om dit te verkry, vir optrede in of deelname aan enige optog of betoging voor, gedurende of na 'n verkiesing;

(c) aan of vir 'n persoon sodanige skenking, lening, aanbod, belofte, verkryging of ooreenkoms gee, verstrek, doen of aangaan ten einde sodanige persoon te beweeg om die verkiesing van 'n kandidaat by 'n verkiesing of die stem van 'n kieser by 'n verkiesing te verkry of om te probeer om dit te verkry;

(d) teen of ten gevolge van sodanige skenking, lening, aanbod, belofte, verkryging of ooreenkoms, die verkiesing van 'n kandidaat by 'n verkiesing of die stem van 'n kieser by 'n verkiesing verkry of onderneem, beloof of probeer om dit te verkry;

(e) aan of vir die gebruik van 'n ander persoon enige geld voorskiet of betaal of laat voorskiet of betaal, met die bedoeling dat daardie geld of enige deel daarvan by 'n verkiesing aan omkopery bestee moet word, of willens en wetens aan 'n persoon enige geld betaal of laat betaal ter vereffening of terugbetaling van geld wat geheel of ten dele by 'n verkiesing aan omkopery bestee is;

(f) voor of gedurende enige verkiesing, vir homself of 'n ander persoon, enige geld of lening ontvang of beding, omdat hy by 'n verkiesing gestem het of ooreengekom het om te stem, of omdat hy hom by 'n verkiesing van stemming onthou het of ooreengekom het om hom van stemming te onthou;

(g) na 'n verkiesing geld ontvang omdat 'n persoon sy stem uitgebring het al dan nie of 'n ander persoon beweeg het om sy stem by enige verkiesing uit te bring al dan nie; of

(h) eiendom oordra of transporteer of betrokke is by die oordrag of transport van eiendom, of enige geld betaal of betrokke is by die betaal van enige geld aan 'n persoon ten einde hom in staat te stel om te stem en daardeur sy stem by 'n toekomstige verkiesing te beïnvloed, of enige geld betaal of betrokke is by die betaling van enige geld ten behoewe van 'n kieser ten einde hom te beweeg om sy stem uit te bring al dan nie.

(2) Geen bepaling van hierdie regulasie mag uitgelê word nie as sou dit van toepassing wees op geld wat vir of weens bona fide- en wettig aangegane verkiesingskoste betaal is of volgens ooreenkoms betaal moet word.

Uitgee vir 'n ander

57. 'n Persoon wat—

(a) by enige verkiesing in die naam van 'n ander persoon, hetsy lewend of afgestorwe, of van 'n denkbeeldige persoon, om 'n stembrief aansoek doen; of

(b) nadat hy een maal by 'n verkiesing gestem het, weer by 'n stemburo by dieselfde verkiesing om 'n stembrief aansoek doen;

begaan die misdryf van hom vir 'n ander uit te gee.

Korrupte verkryging van kandidatuur of terugtrekking daarvan

58. 'n Persoon wat—

(a) 'n ander persoon korruptelik beweeg of oorhaal om, as teenprestasie vir 'n betaling of belofte van watter aard ook al, 'n kandidaat by enige verkiesing te word of as sodanig terug te trek;

(b) as gevolg daarvan dat hy aldus beweeg of oorgehaal is, 'n kandidaat by enige verkiesing word of as sodanig terugtrek; of

(c) before or during an election publishes a false statement of the withdrawal of a candidate at an election for the purpose of promoting or procuring the election of another candidate, knowing that statement to be false;

shall be guilty of an offence.

Bills, placards, etc., to bear publisher's name

59. (1) Every bill, placard, poster, pamphlet, circular or other printed matter having reference to an election shall clearly bear the name and address of the printer and publisher thereof.

(2) No person shall print, publish or post up or cause to be printed, published or posted up, any such printed matter which fails to bear clearly the name and address of the printer and publisher.

(3) The proprietor and publisher of every newspaper shall cause the word "advertisement" to be printed as a headline to each article or paragraph in his newspaper containing electoral matter, the insertion of which is or is to be paid for or for which any reward or compensation or promise of reward or compensation is or is to be made.

(4) The words "electoral matter" used in subregulation (3) include all matters which on the face of it are intended or calculated to affect the result of an election, and any report of the speech of a candidate if the insertion of the report is or is to be paid for.

(5) Every report, letter, article, bill, placard, poster, pamphlet, circular, cartoon or other printed matter (hereinafter in this subregulation called a newspaper article) which, on the face of it, is intended or calculated to affect the result of an election, and is inserted in any newspaper or otherwise produced and is published on or after the date of commencement of such election of members to the Community Council, shall bear at the foot thereof the full name and address of the person by whom such newspaper article was written or produced: Provided that—

(a) any newspaper article which is inserted in any newspaper as aforesaid and which has been altered materially by the editor of such newspaper, may also be signed by such editor;

(b) in the case of a report of a public meeting which is written jointly by two or more persons, it shall be sufficient for the purposes of this subregulation if the report as a whole bears upon the face of it the full names and addresses of the persons by whom it was written; and

(c) in the case of headlines to any newspaper article which is inserted in any newspaper as aforesaid, and bills, placards or posters having reference thereto, which are issued in the ordinary practice of a newspaper, it shall be sufficient for the purposes of this subregulation if the full names and addresses of the persons by whom such headlines, bills, placards or posters were written, and a statement that such headlines, bills, placards or posters were written by such persons, are published in the issue of the newspaper in which such newspaper article is inserted.

(6) Subject to the provisions of proviso (c) to subregulation (5), no person shall print or publish any newspaper or other printed matter in which is inserted or produced any such newspaper article, which fails

(c) voor of gedurende 'n verkiesing, met die doel om die verkiesing van 'n ander kandidaat te bevorder of te bewerkstellig, 'n valse verklaring dat 'n kandidaat by 'n verkiesing teruggetrek het, publiseer wetende dat die verklaring vals is;

begaan 'n misdryf.

Biljette, plakkate, ens., moet naam van uitgewer dra

59. (1) Alle biljette, plakkate, aanplakbiljette, pamflette, omsendbriewe of ander drukwerk wat op 'n verkiesing betrekking het, moet die naam en adres van die drukker en uitgewer daarvan duidelik dra.

(2) Geen persoon mag sodanige drukwerk wat nie die naam en adres van die drukker en uitgewer dra nie, druk, uitgee of aanplak of laat druk, uitgee of aanplak nie.

(3) Die eienaar en uitgewer van iedere nuusblad moet die woord "advertensie" as 'n opskrif laat druk by elke artikel of paragraaf in sy nuusblad wat verkiesingstof bevat, vir die opneming waarvan betaal is of gaan word of waarvoor 'n beloning of vergoeding of 'n belofte van beloning of vergoeding gegee is of gaan word.

(4) Die woord "verkiesingstof" in subregulasie (3) gebesig, omvat alles wat, na die skyn geoordeel, bedoel of daarop bereken is om die uitslag van 'n verkiesing te beïnvloed, asook enige verslag van 'n toespraak van 'n kandidaat, indien vir die opneming van die verslag betaal word of gaan word.

(5) Alle verslae, briewe, artikels, biljette, plakkate, aanplakbiljette, pamflette, omsendbriewe, spotprente of ander drukwerk (hieronder in hierdie subregulasie nuusbladartikels genoem) wat, na die skyn geoordeel, bedoel of daarop bereken is om die uitslag van 'n verkiesing te beïnvloed, en in 'n nuusblad opgeneem of op 'n ander wyse geproduseer word en op of na die datum van die begin van die verkiesing van lede van die gemeenskapsraad gepubliseer word, moet onderaan die volle naam en adres dra van die persoon deur wie die nuusbladartikel geskryf of geproduseer is: Met dien verstande dat—

(a) enige sodanige nuusbladartikel wat soos voormeld in 'n nuusblad opgeneem word en wat wesenlik deur die redakteur van die nuusblad verander is, ook deur sodanige redakteur onderteken kan word;

(b) in die geval van 'n verslag van 'n openbare vergadering wat deur twee of meer persone gesamentlik geskryf is, dit voldoende vir doeleindes van hierdie subregulasie is as die verslag in sy geheel op die voorkant daarvan die volle name en adresse dra van die persone deur wie dit geskryf is; en

(c) in die geval van opskrifte by 'n nuusbladartikel wat soos voormeld in enige nuusblad opgeneem is, en van biljette, plakkate of aanplakbiljette wat daarop betrekking het en wat volgens die gewone gebruik van 'n nuusblad uitgegee word, dit voldoende vir doeleindes van hierdie subregulasie is as die volle name en adresse van die persone deur wie sodanige opskrifte, biljette, plakkate of aanplakbiljette geskryf is, met 'n verklaring dat sodanige opskrifte, biljette, plakkate of aanplakbiljette deur daardie persone geskryf is, gepubliseer word in die uitgawe van die nuusblad waarin sodanige nuusbladartikel opgeneem word.

(6) Behoudens die bepalings van voorbehoudsbepaling (c) van subregulasie (5), mag geen persoon enige nuusblad of ander drukwerk waarin enige sodanige nuusbladartikel opgeneem of geproduseer is, wat nie op

to bear upon the face thereof the full name and address of the person by whom it was written or produced.

(7) For the purposes of this regulation an election shall be deemed to commence on the date of first publication of the notice referred to in regulation 19.

(8) Any person who contravenes or fails to comply with any provision of this regulation shall be guilty of an offence.

Meetings on premises where sale of liquor usually takes place

60. (1) No person shall hire or use—

(a) any premises on which the sale, by wholesale or retail, of any intoxicating liquor is authorised (whether the authorisation be for consumption of liquor on or off the premises); or

(b) any premises where any intoxicating liquor is sold or is supplied to members of a club, society or association;

or any part of any such premises, as a committee room or for any meeting of voters for the purpose of promoting or procuring the election of a candidate at an election or in connection with arrangements made by any person or party in reference to an election.

(2) No person shall let or make available for use any such premises or part thereof, knowing that it is intended to be so used.

(3) Any agreement entered into in contravention of subregulation (1) or (2) shall be null and void.

(4) Any person who contravenes or fails to comply with any provision of this regulation shall be guilty of an offence.

Consequences to the candidates

61. If upon trial it is proved that any corrupt practice or illegal practice has been committed in reference to the election of a member to the Community Council by or with the knowledge and consent or approval of any candidate at that election, the election of that candidate shall be void and a casual vacancy shall exist.

Vacating of seats by members of the Community Council

62. The seat of a member of the Community Council shall become vacant—

(a) upon the death of such member;

(b) upon receipt by the Secretary of the Community Council of a notice of resignation under the hand of such member;

(c) should such member fail to attend three consecutive general meetings of the Community Council without its special leave;

(d) should such member withdraw from any meeting of the Community Council without the permission of the Chairman;

(e) in the event of such member becoming subject to any of the disqualifications mentioned in regulation 12.

Filling of casual vacancies

63. Should the seat of a member become vacant in terms of regulation 61 or 62 or should the Minister under section 3 (2) of the Act determine that a vacancy exist, the vacancy shall, unless the term of the Community Council expires before such vacancy can be

die voorkant daarvan die volle naam en adres dra van die persoon deur wie dit geskryf of geproduseer is nie, druk of publiseer nie.

(7) Vir doeleindes van hierdie regulasie word 'n verkiesing geag te begin op die datum van eerste afkondiging van die kennisgewing in regulasie 19 bedoel.

(8) 'n Persoon wat enige van die bepalings van hierdie regulasie oortree of versuim om daaraan te voldoen, begaan 'n misdryf.

Vergaderings op persele waar gewoonlik drank verkoop word

60. (1) Geen persoon mag—

(a) 'n perseel waarop die verkoop van bedwelmende drank, by wyse van groothandel of kleinhandel, deur 'n magtiging gemagtig is (ongeag of dit 'n magtiging is vir verbruik van drank op die perseel of daarbuite); of

(b) 'n perseel waar bedwelmende drank verkoop of verskaf word aan lede van 'n klub, genootskap of vereniging;

of 'n gedeelte van enige sodanige perseel, as 'n komiteekamer of vir 'n vergadering van kiesers ter bevordering of bewerkstelliging van die verkiesing van 'n kandidaat by 'n verkiesing of in verband met reëlings wat deur 'n persoon of party met betrekking tot 'n verkiesing getref is, huur of gebruik nie.

(2) Geen persoon mag sodanige perseel of 'n gedeelte daarvan verhuur of vir gebruik beskikbaar stel nie, wetende dat dit die bedoeling is om dit aldus te gebruik.

(3) Enige ooreenkoms wat strydig met subregulasie (1) of (2) gesluit is, is van nul en gener waarde.

(4) 'n Persoon wat enige van die bepalings van hierdie regulasie oortree of versuim om daaraan te voldoen, begaan 'n misdryf.

Gevolge vir kandidaat

61. As daar by 'n verhoor bewys word dat 'n korrupte bedrywigheid of 'n onwettige bedrywigheid in verband met die verkiesing van 'n lid van die Gemeenskapsraad deur of met die kennis en instemming of goedkeuring van enige kandidaat by daardie verkiesing begaan is, is die verkiesing van daardie kandidaat nietig en bestaan daar 'n toevallige vakature.

Ontruiming van setels deur lede van die Gemeenskapsraad

62. Die setel van 'n lid van die Gemeenskapsraad raak vakant—

(a) by die afsterwe van sodanige lid;

(b) by ontvangs deur die Sekretaris van die Gemeenskapsraad van 'n kennisgewing van bedanking onder die handtekening van sodanige lid;

(c) indien sodanige lid versuim om drie opeenvolgende algemene vergaderings van die Gemeenskapsraad by te woon sonder die spesiale toestemming daarvan;

(d) indien sodanige lid hom onttrek aan enige vergadering van die Gemeenskapsraad sonder die toestemming van die Voorsitter;

(e) indien sodanige lid onderhewig raak aan enige van die diskwalifikasies in regulasie 12 genoem.

Vulling van toevallige vakatures

63. Indien die setel van 'n lid ingevolge regulasie 61 of 62 vakant raak of indien die Minister kragtens artikel 3 (2) van die Wet bepaal dat 'n vakature bestaan, moet die vakature, tensy die termyn van die Gemeenskapsraad verstryk voordat sodanige vakature

filled, be filled within six months of its occurring, by an election which shall be held in accordance with the provisions of these Regulations.

CHAPTER 6

THE CONVENING OF, THE PROCEDURE AT AND THE CONDUCT OF MEETINGS OF THE COMMUNITY COUNCIL AND COMMITTEES

First general meeting of Community Council

64. The first general meeting of the Community Council shall be convened by the Chief Director on a date, which date shall be within 60 days after the first general election, and at a time and in the manner decided upon by him.

Election of Chairman

65. Immediately after all the members present at the first general meeting of the Community Council and thereafter at the general meeting held in October of each year, have taken their seats the Council shall proceed to the election of the Chairman from the ranks of members of the Council in the manner prescribed in regulation 66.

Manner of election of Chairman

66. (1) A member having first ascertained that the person whom he wishes to propose as Chairman and who is then present, is willing to serve if elected, may propose such person as Chairman and such proposal shall lapse if not seconded.

(2) There shall be no limit to the number of candidates who may be proposed and seconded under subregulation (1), but no member who has already proposed or seconded a candidate shall propose or second any other candidate and no member shall propose or second his own candidature

(3) The names of the persons duly nominated shall be announced by the person presiding at the relevant meeting of the Community Council (hereinafter in this regulation referred to as the presiding officer) and no debate shall be allowed at the election.

(4) If more than one member be proposed as Chairman, a secret ballot shall be held at which—

(a) the presiding officer shall hand each member present a ballot paper with the names of all the candidates thereon and with an official mark on the reverse side thereof;

(b) every member shall signify the candidate for whom he desires to vote by placing a cross opposite the name of such candidate;

(c) the presiding officer shall call the names of all the members and each member shall, when his name is called, drop his ballot paper into a ballot box;

(d) when all members who wish to vote have done so the presiding officer shall, in the presence of the Community Council, examine the ballot papers with the assistance of such members as the Community Council may decide upon and declare the result of the ballot.

(5) The successful candidate shall be the candidate who obtains the greater or the greatest number of votes cast.

(6) In the event of the number of votes being found to be equal for the candidates who obtained the greater or the greatest number of votes, the presiding officer shall by lot determine the successful candidate

gevul kan word, binne ses maande nadat dit ontstaan het, gevul word deur 'n verkiesing wat ooreenkomstig die bepalings van hierdie Regulasies gehou word.

HOOFSTUK 6

DIE BYEENROEPING VAN, DIE PROSEDURE OP EN DIE HOU VAN VERGADERINGS VAN DIE GEMEENSKAPSRAAD EN KOMITEES

Eerste algemene vergadering van Gemeenskapsraad

64. Die Hoofdirekteur roep die eerste algemene vergadering van die Gemeenskapsraad byeen op 'n datum, wat binne 60 dae na die eerste algemene verkiesing moet wees, en op 'n tyd en wyse soos deur hom bepaal.

Verkiesing van Voorsitter

65. Onmiddellik nadat al die lede wat op die eerste algemene vergadering van die Gemeenskapsraad en daarna op die algemene vergadering gehou in Oktober van elke jaar, hul sitplekke ingeneem het, gaan die Gemeenskapsraad oor tot die verkiesing van die Voorsitter uit die geledere van die lede van die Gemeenskapsraad op die wyse in regulasie 66 voorgeskryf.

Wyse waarop Voorsitter verkies word

66. (1) 'n Lid wat vooraf vasgestel het dat die persoon wat hy as Voorsitter wil voorstel en wat dan teenwoordig is, gewillig is om te dien as hy verkies word, kan sodanige persoon as Voorsitter voorstel en indien sodanige voorstel nie gesekondeer word nie, verval dit.

(2) Daar is geen beperking op die getal kandidate wat kragtens subregulasie (1) voorgestel en gesekondeer kan word nie, maar geen lid wat reeds 'n kandidaat voorgestel of gesekondeer het, mag 'n ander kandidaat voorstel of sekondeer nie en geen lid mag sy eie kandidatuur voorstel of sekondeer nie.

(3) Die name van die behoorlik genomineerde persone moet deur die persoon wat by die betrokke vergadering van die Gemeenskapsraad voorsit (hierna in hierdie regulasie die voorsittende beampte genoem) aangekondig word op die sitting waartydens die verkiesing moet plaasvind, en geen debat word by die verkiesing toegelaat nie.

(4) Indien meer as een lid as Voorsitter voorgestel word, word 'n geheime stemming gehou waarby—

(a) die voorsittende beampte aan elke lid teenwoordig 'n stembriefie met die name van al die kandidate daarop en met 'n amptelike merk op die keersy daarvan uitreik;

(b) elke lid die kandidaat vir wie hy wil stem, aandui deur 'n kruis teenoor die naam van sodanige kandidaat te plaas;

(c) die voorsittende beampte die name van al die lede uitroep en elke lid, wanneer sy naam uitgeroep word, sy stembriefie in 'n stembus laat val;

(d) sodra alle lede wat wil stem dit gedoen het, die voorsittende beampte met die hulp van sodanige lede as wat die Gemeenskapsraad bepaal, die stembriefies in teenwoordigheid van die Gemeenskapsraad ondersoek en die uitslag van die stemming bekendmaak.

(5) Die suksesvolle kandidaat is die kandidaat wat die grootste getal stemme uitgebring, verkry.

(6) Ingeval daar bevind word dat daar ewe veel stemme uitgebring is op die kandidate wat die grootste getal stemme verkry het, bepaal die voorsittende beampte die suksesvolle kandidaat by loting.

(7) A member who arrives after the names of the members have been called shall not be entitled to vote.

(8) If only one member is proposed and seconded as Chairman he shall be declared elected.

Manner of election of Deputy Chairman

67. Immediately after the Chairman has been elected, the Community Council shall proceed to the election of a Deputy Chairman and the provisions of regulation 66 shall apply *mutatis mutandis* to the election of a Deputy Chairman: Provided that any reference in regulation 66 to the presiding officer shall be construed as being a reference to the Chairman.

Period of office of Chairman and Deputy Chairman

68. Subject to the provisions of regulation 69, the Chairman and the Deputy Chairman shall hold office until their successors be elected at the general meeting referred to in regulation 65.

Vacation of office by Chairman or Deputy Chairman

69. (1) The Chairman or the Deputy Chairman shall vacate his office—

(a) if his seat as a member of the Community Council becomes vacant or is deemed to have been vacated in terms of the provisions of these Regulations;

(b) if he resigns his office as Chairman or Deputy Chairman by notice, in writing, to the Secretary of the Community Council or makes an announcement to that effect at a meeting of the Community Council.

(2) If the Chairman or the Deputy Chairman vacates his seat otherwise than in pursuance of his resignation announced at a meeting of the Community Council, the Secretary of the Community Council shall at the first ensuing meeting of the Community Council inform it accordingly.

Filling of casual vacancies

70. A casual vacancy in the office of Chairman or of Deputy Chairman shall, if the Community Council is holding a meeting when the vacancy occurs, be filled by the election at that meeting of an incumbent to the office concerned in the manner provided in these Regulations and if the Community Council is then not holding a meeting such election shall take place at its next meeting.

Meetings of the Community Council

71. (1) Every meeting of the Community Council shall be held at the seat of the Council which shall be situated within the area for which the Community Council has been established: Provided that the Minister may direct that any such meeting be held at a place situated outside such area.

(2) The Community Council shall hold one general meeting each month.

(3) Notwithstanding the provisions of regulation 78, the Community Council shall at each general meeting thereof, whether or not there is a quorum at such meeting, decide the date and time of the next general meeting.

(4) Subject to the provisions of regulation 64, the Secretary of the Community Council shall, in writing, not less than seven days prior to a general meeting of the Council inform the members, the Chief Director and the Commissioner of the date and time fixed for, and the business to be transacted at, such general meeting.

(7) 'n Lid wat opdaag nadat die lede se name uitgeroep is, is nie geregtig om te stem nie.

(8) Indien slegs een lid as Voorsitter voorgestel en gesekondeer word, word hy verkose verklaar.

Wyse waarop Ondervoorsitter verkies word

67. Onmiddellik nadat die Voorsitter verkies is, gaan die Gemeenskapsraad oor tot die verkiesing van 'n Ondervoorsitter en is die bepalings van regulasie 66 *mutatis mutandis* van toepassing by die verkiesing van 'n Ondervoorsitter: Met dien verstande dat 'n verwysing in regulasie 66 na die voorsittende beampte uitgelê word as 'n verwysing na die Voorsitter.

Ampstermyn van Voorsitter en Ondervoorsitter

68. Behoudens die bepalings van regulasie 69, beklee die Voorsitter en die Ondervoorsitter hulle amp totdat hul opvolgers gedurende die algemene vergadering in regulasie 65 bedoel, verkies word.

Ontruiming van amp deur Voorsitter of Ondervoorsitter

69. (1) Die Voorsitter of die Ondervoorsitter ontruim sy amp—

(a) indien sy setel as lid van die Gemeenskapsraad vakant raak of geag word ontruim te gewees het ingevolge die bepalings van hierdie Regulasies;

(b) indien hy uit sy amp as Voorsitter of Ondervoorsitter bedank by skriftelike kennisgewing aan die Sekretaris van die Gemeenskapsraad of 'n aankondiging tot dien effekte op 'n sitting van die Gemeenskapsraad doen.

(2) Indien die Voorsitter of die Ondervoorsitter sy setel ontruim anders as deur die aankondiging van sy bedanking op 'n sitting van die Gemeenskapsraad, verwittig die Sekretaris van die Gemeenskapsraad gedurende die eerste daaropvolgende vergadering van die Gemeenskapsraad die Gemeenskapsraad dienooreenkomstig.

Vulling van toevallige vakatures

70. 'n Toevallige vakature in die amp van Voorsitter of van Ondervoorsitter moet, indien die Gemeenskapsraad in sitting is wanneer die vakature ontstaan, gevul word deur die verkiesing tydens sodanige sitting van 'n bekleër vir die betrokke amp op die wyse in hierdie Regulasies bepaal, en indien die Gemeenskapsraad nie dan in sitting is nie, moet sodanige verkiesing op die daaropvolgende vergadering plaasvind.

Vergaderings van die Gemeenskapsraad

71. (1) Elke vergadering van die Gemeenskapsraad word gehou by die setel van die Gemeenskapsraad wat binne die gebied waarvoor die Gemeenskapsraad ingestel is, geleë moet wees: Met dien verstande dat die Minister kan gelas dat enige sodanige vergadering gehou moet word op 'n plek geleë buite sodanige gebied.

(2) Die Gemeenskapsraad hou een algemene vergadering elke maand.

(3) Ondanks die bepalings van regulasie 78, bepaal die Gemeenskapsraad by elke algemene vergadering daarvan, of daar 'n kworum by sodanige vergadering is aldan nie, die datum en tyd van die daaropvolgende algemene vergadering.

(4) Behoudens die bepalings van regulasie 64, stel die Sekretaris van die Gemeenskapsraad die lede, die Hoofdirekteur en die Kommissaris minstens sewe dae voor 'n algemene vergadering van die Gemeenskapsraad skriftelik in kennis van die datum en tyd bepaal vir en die sake wat behandel gaan word gedurende sodanige algemene vergadering.

University of Fort Hare

Special meeting of the Community Council

72. (1) The Chairman may at any time convene a special meeting of the Community Council and only such business as the Chairman may lay before it or approve shall be transacted.

(2) The Secretary of the Community Council shall, in writing, not less than 72 hours prior to a special meeting of the Community Council inform the members, the Chief Director and the Commissioner of the date and time fixed for, and the business to be transacted at, such special meeting.

Meetings of Community Council open to public and press

73. (1) Subject to the provisions of subregulation (2), all meetings of the Community Council shall be open to the public and the press.

(2) If the Community Council is of the opinion that any matter can more conveniently or advantageously be dealt with in the absence of members of the public and the press, it may, subject to the provisions of section 3 (6) of the Act, exclude the public and the press from such meeting while such matter is dealt with.

Chairman to preside at meetings of Community Council

74. The Chairman or, in his absence, the Deputy Chairman shall preside at all meetings of the Community Council or if both the Chairman and the Deputy Chairman are unable through absence or other cause to preside at a meeting, the members present shall, with the Secretary of the Community Council, who shall not be entitled to vote, as presiding officer, nominate one of the members present to preside at such meeting: Provided that the Chairman of the Board or a member of the Board designated by him shall preside at the first general meeting of the Community Council until a Chairman is elected.

Attendance register

75. Every member attending a meeting of the Community Council shall sign the attendance register kept for this purpose.

Order of business

76. The business of each meeting of the Community Council shall, in accordance with the need thereof, be transacted in the following order:

(a) Notice convening the meeting;
(b) obituaries and ceremonial speeches;
(c) applications for leave of absence;
(d) official announcements;
(e) unopposed motions of the Chairman;
(f) minutes of previous meeting;
(g) reports of committees;
(h) questions of which notice has been given;
(i) motions held over from previous meetings;
(j) petitions;
(k) new motions;
(l) other matters.

Business to be transacted at meeting of Community Council

77. No business other than that included in the agenda embodied in the notice convening a meeting shall be transacted at such meeting of the Community Council: Provided that at such meeting, and with the approval of the Chairman, matters of urgency may be raised and submitted to the Council.

Spesiale vergadering van die Gemeenskapsraad

72. (1) Die Voorsitter kan te eniger tyd 'n spesiale vergadering van die Gemeenskapsraad byeenroep en slegs die sake wat die Voorsitter voorlê of goedkeur, word behandel.

(2) Die Sekretaris van die Gemeenskapsraad stel die lede, die Hoofdirekteur en die Kommissaris minstens 72 uur voor 'n spesiale vergadering van die Gemeenskapsraad skriftelik in kennis van die datum en tyd bepaal vir en die sake wat behandel gaan word gedurende sodanige spesiale vergadering.

Vergaderings van Gemeenskapsraad vir publiek en pers toeganklik

73. (1) Behoudens die bepalings van subregulasie (2), is alle vergaderings van die Gemeenskapsraad vir die publiek en pers toeganklik.

(2) Indien die Gemeenskapsraad van mening is dat 'n aangeleentheid geriefliker of voordeliger in die afwesigheid van lede van die publiek en die pers behandel kan word, kan hy, behoudens die bepalings van artikel 3 (6) van die Wet, die publiek en die pers van sodanige vergaderings uitsluit terwyl sodanige aangeleentheid behandel word.

Voorsitter sit voor by vergaderings van Gemeenskapsraad

74. Die Voorsitter of, in sy afwesigheid, die Ondervoorsitter, sit voor op alle vergaderings van die Gemeenskapsraad of, as sowel die Voorsitter as die Ondervoorsitter weens afwesigheid of om 'n ander rede nie op 'n vergadering kan voorsit nie, benoem die aanwesige lede onder die voorsitterskap van die Sekretaris van die Gemeenskapsraad, wat nie geregtig is om te stem nie, een van die aanwesige lede om op sodanige vergadering voor te sit: Met dien verstande dat die Voorsitter van die Raad of 'n lid van die Raad deur hom aangewys op die eerste algemene vergadering van die Gemeenskapsraad voorsit totdat 'n Voorsitter verkies is.

Bywoningsregister

75. Elke lid wat 'n vergadering van die Gemeenskapsraad bywoon, teken sy naam in die bywoningsregister wat vir dié doel gehou word.

Volgorde van werksaamhede

76. Die werksaamhede van elke vergadering van die Gemeenskapsraad word na gelang daarvan of dit nodig is, in die volgende volgorde verrig:

(a) Beskrywingsbrief;
(b) sterflys en seremoniële toesprake;
(c) aansoeke om afwesigheidsverlof;
(d) amptelike aankondigings;
(e) onbestrede mosies van die Voorsitter;
(f) notule van vorige vergadering;
(g) verslae van komitees;
(h) vrae waarvan kennis gegee is;
(i) mosies wat sedert vorige vergaderings oorstaan;
(j) versoekskrifte;
(k) nuwe mosies;
(l) ander aangeleenthede.

Werksaamhede wat by vergadering van Gemeenskapsraad behandel word

77. Geen saak wat nie in die sakelys in die beskrywingsbrief vermeld is nie, word op daardie vergadering van die Gemeenskapsraad behandel nie: Met dien verstande dat, met die toestemming van die Voorsitter, dringende sake op sodanige vergadering geopper en aan die Gemeenskapsraad voorgelê kan word.

Quorum

78. Any number of members exceeding half the number of members of the Community Council shall form a quorum.

Procedure when quorum not present

79. (1) If after the expiration of 20 minutes after the time at which any meeting of the Council is appointed to be held, a quorum is not assembled, no meeting shall take place. If the members present unanimously consent thereto, a further period, not exceeding 10 minutes, may be permitted to enable a quorum to assemble, but the members present may by a majority decision at any stage after 10 minutes past the time appointed for such meeting, request the Chairman to convene a further meeting within 10 days, at which meeting, notwithstanding the provisions of regulation 78, the members present shall form a quorum and if the Chairman complies with such request the provisions of regulation 71 shall *mutatis mutandis* apply.

(2) If during the sitting of any meeting of the Council a quorum is found not to be present no further business shall be conducted until a quorum is reassembled. Should a quorum not be present and 10 minutes elapse after the attention of the Chairman is drawn to the absence of a quorum, the meeting shall stand adjourned until a time to be decided by the Chairman.

(3) If from the number of members voting it appears that a quorum is not present the voting shall be invalid.

Adjournment of meeting

80. If for any reason whatsoever, the business to be transacted at any meeting of the Community Council cannot be completed at such meeting, the Chairman may adjourn such meeting to a date and time to be determined by the Chairman in consultation with the members.

Questions

81. A member may ask a question at any meeting of the Community Council—

(a) in connection with any matter arising out of or having a bearing on an item in the report of a committee during the discussion of such report;

(b) regarding the exercise of any of the Council's powers or performance of any of its duties or conditions within the area for which the Community Council has been established.

Notice of question, motion or petition to be given

82. (1) Notice of any question, referred to in regulation 81 (b), motion (excluding any unopposed motion of the Chairman) or petition which a member wishes to pose, move or present, as the case may be, at or to any general meeting of the Community Council shall be in writing and signed by such member and shall be forwarded to the Secretary of the Community Council who shall, subject to the provisions of subregulation (2) and regulation 84, place it on the agenda for the next ensuing general meeting.

(2) If any such question, motion or petition is received by the Secretary of the Community Council at least 10 days before the next ensuing general meeting of the

Kworum

78. Enige getal lede wat meer as die helfte van die getal lede van die Gemeenskapsraad is, vorm 'n kworum.

Prosedure wanneer kworum nie teenwoordig is nie

79. (1) Indien daar na afloop van 20 minute na die tyd waarop 'n vergadering van die Gemeenskapsraad moet begin geen kworum is nie, vind geen vergadering plaas nie. Indien die aanwesige lede dit eens is, kan 'n verdere tydperk van hoogstens 10 minute toegelaat word om 'n kworum te laat byeenkom, maar die aanwesige lede kan, deur 'n meerderheidsbeslissing, te eniger tyd na die verloop van 10 minute na die tyd waarop sodanige vergadering moet begin, die Voorsitter versoek om 'n verdere vergadering binne 10 dae te belê, en by sodanige vergadering, ondanks die bepalings van regulasie 78, maak die lede teenwoordig 'n kworum uit en indien die Voorsitter aan so 'n versoek voldoen, is die bepalings van regulasie 71 *mutatis mutandis* van toepassing.

(2) Indien daar gedurende die sitting van 'n vergadering van die Gemeenskapsraad bevind word dat 'n kworum nie teenwoordig is nie, word geen verdere sake behandel nie totdat 'n kworum opnuut byeengekom het. Indien 'n kworum nie teenwoordig is nie en 10 minute verstryk nadat die Voorsitter se aandag op die gebrek aan 'n kworum gevestig is, word die vergadering verdaag tot 'n tyd deur die Voorsitter bepaal.

(3) As dit uit die getal lede wat deelneem aan 'n stemming, blyk dat 'n kworum nie teenwoordig is nie, is die stemming ongeldig.

Verdaging van vergadering

80. Indien, om watter rede ook al, die sake wat by 'n vergadering van die Gemeenskapsraad behandel staan te word, nie by sodanige vergadering afgehandel kan word nie, kan die Voorsitter sodanige vergadering verdaag tot 'n datum en tyd wat die Voorsitter in oorleg met die lede bepaal.

Vrae

81. 'n Lid kan op 'n vergadering van die Gemeenskapsraad 'n vraag stel—

(a) oor 'n saak wat voortspruit uit of in verband staan met 'n item van die verslag van 'n komitee tydens die bespreking van sodanige verslag;

(b) betreffende die uitoefening van enige van die Gemeenskapsraad se bevoegdhede, die uitvoering van enige van sy pligte, of toestande binne die gebied waarvoor die Gemeenskapsraad ingestel is.

Wyse waarop kennisgewing van vraag, mosie of versoekskrif geskied

82. (1) Kennis van 'n vraag in regulasie 81 (b) bedoel, 'n mosie (uitgesonderd 'n onbestrede mosie van die Voorsitter) of versoekskrif wat 'n lid wil stel of indien, na gelang van die geval, op 'n vergadering van die Gemeenskapsraad moet skriftelik wees en deur sodanige lid onderteken wees en word aan die Sekretaris van die Gemeenskapsraad gestuur, en behoudens die bepalings van subregulasie (2) en regulasie 84 plaas hy dit op die sakelys van die daaropvolgende algemene vergadering.

(2) Indien sodanige vraag, mosie of versoekskrif deur die Sekretaris van die Gemeenskapsraad minstens 10 dae voor die daaropvolgende algemene vergadering van die Gemeenskapsraad ontvang is, plaas hy dit op

University of Pretoria
Tuisteplek van Uitnemendheid
Home of Excellence

Community Council he shall place it on the agenda for such meeting or otherwise he shall place it on the agenda for the next ensuing general meeting.

(3) If a member is not present to pose his question or present his petition when he is called upon to do so by the Chairman, and he has not authorised any other member to do so on his behalf, the question or petition shall lapse.

Chairman may reject certain motions, questions or petitions

83. (1) The Chairman may reject any motion, question or petition which in his opinion will lead to the discussion of a matter already included in the agenda or which does not concern the area for which the Community Council has been established or over which the Council has no jurisdiction or which is not clear and he shall reject any motion or petition which, if it were to be moved or accepted, as the case may be, would be against the law.

(2) If the Chairman so rejects any motion, question or petition he shall inform the Community Council of his decision and shall not call upon the member concerned to move such motion, pose such question or present such petition, as the case may be.

Motion to rescind a resolution passed during the previous three months

84. No motion to rescind a resolution passed by the Community Council during the previous three months or having the same effect as one that has been rejected by the Community Council during the previous three months shall be placed on the agenda unless the notice of such motion is signed by at least three members in addition to the member who wishes to move such motion and after the Community Council has dealt with such motion no member may move a similar motion within six months thereafter.

Procedure on moving a motion

85. (1) When motions come up for discussion, the Chairman shall, subject to the provisions of regulation 83, read out the numbers and names of the movers of all the motions appearing on the agenda and he shall ascertain which motions are unopposed and such unopposed motions shall immediately be carried.

(2) Immediately after such unopposed motions have been carried the Chairman shall, in the order in which the remaining motions appear on the agenda, call upon the members concerned to move such motions.

(3) A member called upon by the Chairman to move a motion shall rise in his place and after making such remarks as he may wish he shall move the motion.

(4) If a member is not present to move a motion when called upon to do so by the Chairman, and he has not authorised any other member to do so on his behalf, the motion shall lapse.

(5) Every motion moved shall require seconding and if a motion is not seconded it shall lapse.

(6) When a motion has been moved and seconded, the Chairman shall read it or cause it to be read after which debate may take place on such motion and may continue, subject to the provisions of these Regulations, for as long as any member who is entitled to speak wishes to speak.

die sakelys vir sodanige vergadering, of anders plaas hy dit op die sakelys van die daaropvolgende algemene vergadering.

(3) As 'n lid nie teenwoordig is om sy vraag te stel of sy versoekskrif in te dien nie wanneer hy deur die Voorsitter versoek word om dit te doen en hy nie 'n ander lid gemagtig het om dit namens hom te stel of in te dien nie, verval die vraag of versoekskrif.

Voorsitter kan sekere mosies, vrae of versoekskrifte verwerp

83. (1) Die Voorsitter kan 'n mosie, vraag of versoekskrif verwerp wat na sy mening tot die bespreking sou lei van 'n saak wat reeds in die sakelys vervat is of wat nie op die gebied waarvoor die Gemeenskapsraad ingestel is betrekking het nie of waaroor die Gemeenskapsraad nie regsbevoegdheid het nie of wat nie duidelik is nie, en hy verwerp 'n mosie of versoekskrif wat, as dit voorgestel of aangeneem word, na gelang van die geval, strydig sal wees met die wet.

(2) Indien die Voorsitter 'n mosie, vraag of versoekskrif aldus verwerp, stel hy die Gemeenskapsraad in kennis van sy beslissing en hy versoek nie die betrokke lid om sodanige mosie in te dien, sodanige vraag te stel of sodanige versoekskrif in te dien nie, na gelang van die geval.

Mosie ter herroeping van 'n besluit geneem binne voorafgaande drie maande

84. Geen mosie ter herroeping van 'n besluit wat gedurende die voorafgaande drie maande geneem is of 'n mosie van dieselfde strekking as een wat binne die voorafgaande drie maande deur die Gemeenskapsraad verwerp is, word op die sakelys geplaas nie, tensy die kennisgewing van die mosie deur minstens drie lede, benewens die voorsteller van die mosie, onderteken is, en nadat die Gemeenskapsraad sodanige mosie afgehandel het, mag geen lid weer 'n soortgelyke mosie binne ses maande daarna indien nie.

Prosedure by die indiening van 'n mosie

85. (1) Wanneer mosies aan die orde kom, lees die Voorsitter, behoudens die bepalings van regulasie 83, die nommers en die name uit van die voorstellers van al die mosies wat op die sakelys verskyn, en hy stel vas watter mosies onbestrede is, en sodanige onbestrede mosies word dadelik aangeneem.

(2) Onmiddellik nadat sodanige onbestrede mosies aangeneem is, versoek die Voorsitter die betrokke lede, beurtelings in die volgorde waarin die oorblywende mosies op die sakelys verskyn, om sodanige mosies in te dien.

(3) 'n Lid wat deur die Voorsitter versoek word om 'n mosie in te dien, staan in sy plek op en na enige opmerkings wat hy wens te maak, dien hy die mosie in.

(4) As 'n lid nie teenwoordig is nie om sy mosie in te dien wanneer hy deur die Voorsitter versoek word om dit te doen en hy nie 'n ander lid gemagtig het om dit namens hom in te dien nie, verval die mosie.

(5) Elke mosie ingedien moet gesekondeer word, en as 'n mosie nie gesekondeer word nie, verval dit.

(6) Wanneer 'n mosie ingedien is en gesekondeer is, lees die Voorsitter dit uit, of laat dit uitlees, waarna sodanige mosie gedebatteer kan word en die debat kan, behoudens die bepalings van hierdie Regulasies, so lank aanhou as wat enige lid wat die reg het om te praat, nog wil praat

(7) When no more members wish or are entitled to speak the Chairman shall put the motion to the Community Council for its decision.

(8) When an amendment or amendments have been proposed to a motion the Chairman shall first put the amendments and after all amendments have been disposed of, again read and put the original motion or if it has been amended the motion as amended, so as to enable the members of the Community Council to be fully acquainted with the terms thereof.

(9) The order in which amendments shall be put shall be in the discretion of the Chairman.

(10) No member may speak on a motion or amendment after it has been fully put by the Chairman.

Amendments to motions

86. (1) A member who has risen to speak on a motion may propose an amendment to such motion.

(2) Such amendment shall require seconding.

(3) An amendment may take one of the following forms:

(a) To leave out one or more words of the motion;

(b) to insert one or more words in the motion;

(c) to add one or more words at the end of the motion;

(d) to substitute certain other words for certain words contained in the motion.

(4) Members may propose more than one amendment to a motion but a proposal to further amend a proposed amendment shall be out of order.

(5) Debate may take place on any amendment to a motion.

Postponement of motions

87. (1) Any member may move that a motion be postponed or referred to a committee of the Community Council for consideration.

(2) Such motion shall be seconded.

(3) Notwithstanding the provisions of regulation 97 (2), the mover of such motion shall speak for not more than five minutes and the seconder shall not be permitted to speak beyond formally seconding it.

(4) Immediately after such motion has been seconded the Chairman shall put the motion to the Community Council for its decision.

Withdrawal of motions and amendments

88. A motion or an amendment proposed to such motion may be withdrawn at the request of the mover thereof by leave of the Community Council at any time before the question has been fully put.

Moving reports at meetings of Community Council

89. (1) All recommendations of any committee shall be reported to the Council and the Chairman of the committee concerned or in his absence a member of the committee called upon by the Chairman of the Council, shall introduce the report by moving that the report of the committee concerned be received.

(2) The Council having agreed to receive the report, the Chairman of the Community Council shall thereupon put the recommendations contained in the various items *seriatim*, unless for good cause he sees fit to vary

(7) Wanneer daar nie meer lede is wat wens, of geregtig is, om te praat nie, stel die Voorsitter die mosie aan die Gemeenskapsraad vir beslissing.

(8) Wanneer 'n amendement of amendemente op 'n mosie voorgestel is, stel die Voorsitter eers die amendemente en na al die amendemente afgehandel is, lees en stel hy weer die oorspronklike mosie of, indien dit gewysig is, die mosie, soos gewysig, ten einde die lede van die Gemeenskapsraad ten volle vertroud te maak met die bepalings daarvan.

(9) Die volgorde waarin amendemente gestel word, is volgens die diskresie van die Voorsitter.

(10) Geen lid mag oor 'n mosie of 'n amendement praat nadat dit ten volle deur die Voorsitter gestel is nie.

Amendemente op mosies

86. (1) 'n Lid wat opgestaan het om 'n mosie te bespreek, kan 'n amendement op die mosie voorstel.

(2) Sodanige amendement moet gesekondeer word.

(3) 'n Amendement kan een van die volgende vorme aanneem:

(a) Om een of meer van die woorde van die mosie weg te laat;

(b) om een of meer woorde in die mosie in te voeg;

(c) om een of meer woorde aan die einde van die mosie by te voeg;

(d) om sekere woorde van die mosie deur sekere ander woorde te vervang.

(4) Lede kan meer as een amendement op 'n mosie voorstel, maar 'n voorstel vir die verdere wysiging van 'n voorgestelde amendement is buite die orde.

(5) 'n Amendement op 'n mosie kan gedebateer word.

Uitstel van mosies

87. (1) 'n Lid kan voorstel dat 'n mosie uitgestel of na 'n komitee van die Gemeenskapsraad verwys word vir oorweging.

(2) Sodanige voorstel moet gesekondeer word.

(3) Ondanks die bepalings van regulasie 97 (2), kan die indiener van sodanige voorstel hoogstens vyf minute lank praat en die sekondant word nie toegelaat om te praat nie buiten om dit formeel te sekondeer.

(4) Onmiddellik nadat sodanige voorstel gesekondeer is, stel die Voorsitter die voorstel aan die Gemeenskapsraad vir beslissing.

Terugtrekking van mosies en amendemente

88. 'n Mosie of 'n voorgestelde amendement van sodanige mosie kan te eniger tyd voordat die mosie ten volle gestel is, teruggetrek word op versoek van die voorsteller daarvan met die verlof van die Gemeenskapsraad.

Indiening van verslae op vergaderings van Gemeenskapsraad

89. (1) Verslag oor alle aanbevelings van 'n komitee word aan die Gemeenskapsraad gedoen en die Voorsitter van die betrokke komitee, of in sy afwesigheid 'n lid van die komitee deur die Voorsitter van die Gemeenskapsraad aangesê, dien die verslag in deur voor te stel dat die verslag van die betrokke komitee in ontvangs geneem word.

(2) Nadat die Gemeenskapsraad besluit het om die verslag in ontvangs te neem, stel die Voorsitter van die Gemeenskapsraad die aanbevelings vervat in die verskillende items *seriatim*, tensy hy goeddunk om hul volgorde te verander. Indien die meerderheid van die

their order. If the majority of the members of the Council present agree with any recommendation it shall forthwith become a resolution of the Council.

Item to be referred back for further consideration

90. (1) When the report of any committee has been received by the Council and a recommendation in that report is before the Council, any member may move that the item be referred back to such committee for further consideration.

(2) If such motion is carried, the debate on the recommendation shall end forthwith.

Chairman to maintain order

91. Order shall be maintained in the Community Council by the Chairman whose decision on a point of order shall not be open to appeal and shall not be reviewed by the Community Council.

Members to sit down when Chairman rises

92. When the Chairman rises during a meeting of the Community Council every member shall sit down and members shall be silent so that the Chairman may be heard without interruption.

Members to speak standing

93. A member shall speak standing and shall address his observations to the Chair.

Chairman to select speaker

94. If two or more members rise at the same time to speak the Chairman shall select one member and call on him to speak.

Members not speaking to be seated

95. When a member has finished speaking he shall resume his seat and any other member wishing to speak shall rise.

Matters on which members may speak

96. A member may address the Community Council on the question before the Council or upon any amendment proposed thereto, or upon a question or amendment to be proposed by himself, or upon a point of order arising out of debate, but not otherwise and no discussion or debate shall be permitted which will anticipate any matter on the agenda.

Speaking on questions at meetings of Community Council

97. (1) No member shall address the Community Council more than once on the question before the Community Council except in explanation, such explanation being allowed only in case a material part of his speech has been misquoted or misunderstood, and he shall not introduce any new matter and no debate shall be allowed on such explanation.

(2) No member may, without the approval of the Community Council, exceed 10 minutes in speaking on any question.

(3) Notwithstanding the provisions of subregulation (1), the member who introduced the question may reply and such member having so replied, the debate shall be closed and the question put to the vote.

Form of address

98. During proceedings at a meeting of the Community Council members shall refer to one another as "the honourable member" (stating the member's name).

aanwesige lede van die Gemeenskapsraad 'n aanbeveling aanvaar, word dit onverwyld 'n besluit van die Gemeenskapsraad.

Item kan terugverwys word vir verdere oorweging

90. (1) Wanneer die verslag van 'n komitee deur die Gemeenskapsraad in ontvangs geneem is en 'n aanbeveling van sodanige verslag voor die Gemeenskapsraad dien, kan 'n lid voorstel dat die item na sodanige komitee terugverwys word vir verdere oorweging.

(2) As sodanige voorstel aangeneem word, eindig die debat oor die aanbeveling onverwyld.

Voorsitter handhaaf orde

91. Orde word in die Gemeenskapsraad deur die Voorsitter gehandhaaf en sy beslissing oor 'n punt van orde is nie onderworpe aan appèl nie en word nie deur die Gemeenskapsraad hersien nie.

Lede moet sit wanneer Voorsitter opstaan

92. Wanneer die Voorsitter gedurende 'n vergadering van die Gemeenskapsraad opstaan, sit elke lid en lede bly stil sodat die Voorsitter ongestoord gehoor kan word.

Lede praat staande

93. Elke lid staan as hy praat en rig sy opmerkings tot die Stoel.

Voorsitter kies spreker

94. Indien twee of meer lede gelyk opstaan om te praat, kies die Voorsitter een lid en versoek hom om te praat.

'n Lid wat nie praat nie, moet sit

95. 'n Lid wat klaar gepraat het, moet sit en enige ander lid wat wil praat, moet opstaan.

Sake waaroor lede kan praat

96. 'n Lid kan oor die mosie voor die Gemeenskapsraad praat of oor amendemente daarop voorgestel, of oor 'n mosie of amendement wat hy self wil voorstel, of oor 'n punt van orde voortspruitende uit die debat, maar anders nie en geen bespreking of debat wat 'n saak wat op die sakelys voorkom, sal vooruitloop, word toegelaat nie.

Die praat oor onderwerpe op vergaderings van Gemeenskapsraad

97. (1) Geen lid spreek die Gemeenskapsraad meer as een maal oor 'n mosie voor die Gemeenskapsraad toe nie, behalwe by wyse van verduideliking, welke verduideliking toegelaat word slegs ingeval 'n wesentlike deel van 'n lid se toespraak verkeerd aangehaal of misverstaan is en hy mag geen nuwe aangeleentheid behandel nie en oor sodanige verduideliking word geen debat toegelaat nie.

(2) Geen lid praat sonder die toestemming van die Gemeenskapsraad langer as 10 minute oor enige mosie nie.

(3) Ondanks die bepalings van subregulasie (1), kan die lid wat 'n mosie ingedien het, repliek lewer en nadat sodanige lid sodanige repliek gelewer het, is die debat gesluit en word die mosie in stemming gebring.

Aanspreekvorm

98. Gedurende verrigtings by 'n vergadering van die Gemeenskapsraad verwys lede na mekaar as "die agbare lid" (die naam van lid moet gemeld word).

LUMINE TUO BIMUS LUMEN
Together in Excellence

Conduct of members during meetings

99. During a meeting of the Community Council a member shall—

(a) enter or leave the Chamber with decorum;

(b) in the case of a male, be bare-headed while in the Chamber and bow to the Chair when entering or leaving the Chamber or passing to or from his place;

(c) not pass between the Chair and any member speaking;

(d) not address the Chairman by name or any other title save as "Mr Chairman";

(e) not cross the floor of the Chamber unnecessarily;

(f) when crossing from one side of the Chamber to the other, pause in the centre and bow to the Chair;

(g) not read newspapers, books, letters or other documents except such matter therein as may be directly connected with the business then under consideration;

(h) while a member is speaking be silent and not make unseemly interruptions;

(i) when called to order by the Chairman immediately resume his seat; and

(j) when the Community Council adjourns keep his place until the Chairman has left the Chair.

Speeches to be relevant

100. A member shall restrict his observations to the subject under discussion and shall not introduce matters irrelevant to that subject.

Irrelevance or repetition

101. The Chairman after having called the attention of the Community Council to the conduct of a member who persists in irrelevance or tedious repetition of his own or some other member's arguments in debate, may order him to discontinue his speech and resume his seat.

When interruption may be made

102. A member shall not interrupt the speech of any other member except—

(a) by rising to a point of order, when the member speaking shall resume his seat and the member interrupting shall merely direct attention to the point which he wishes to bring to notice and submit it to the Chairman for decision; or

(b) to put a relevant question to the speaker with the consent of the Chairman.

Insulting language out of order

103. It shall be out of order to use offensive and insulting language about members of the Community Council.

Imputation of improper motives out of order

104. A member shall not impute improper motives to any other member.

Personal charges out of order

105. A member shall not make a personal charge in reference to any other member.

Offensive expressions about Community Council out of order

106. A member shall not use offensive expressions about the conduct of proceedings at meetings of the Community Council.

Gedrag van lede tydens vergaderings

99. Gedurende vergaderings van die Gemeenskapsraad moet 'n lid—

(a) die Raadsaal met dekorum binnekom of verlaat;

(b) in die geval van 'n man, blootshoof wees terwyl hy in die Raadsaal is en 'n buiging voor die Stoel maak wanneer hy die Raadsaal binnekom of verlaat, of wanneer hy na of van sy sitplek gaan;

(c) nie tussen die Stoel en 'n lid wat aan die woord is, verbygaan nie;

(d) nie die Voorsitter by sy naam of enige ander titel as "Meneer die Voorsitter" aanspreek nie;

(e) nie onnodig oor die vloer van die Raadsaal stap nie;

(f) wanneer hy van een deel van die Raadsaal na 'n ander gaan, in die middel stilstaan en 'n buiging voor die Stoel maak;

(g) nie nuusblaaie, boeke, briewe of ander dokumente lees nie, uitgesonderd sodanige stof daarin as wat regstreeks in verband staan met die aangeleentheid dan onder oorweging;

(h) stilbly terwyl 'n lid aan die woord is, en hom nie onnodig in die rede val nie;

(i) wanneer hy deur die Voorsitter tot orde geroep is, dadelik gaan sit; en

(j) wanneer die Gemeenskapsraad verdaag, in sy sitplek bly totdat die Voorsitter die Stoel verlaat het.

Toesprake moet ter sake wees

100. 'n Lid moet sy opmerkings oor die onderwerp in bespreking beperk, en mag geen sake wat nie op daardie onderwerp betrekking het nie, byhaal nie.

Ontoepaslikheid of herhaling

101. Nadat die Voorsitter die aandag van die Gemeenskapsraad gevestig het op die gedrag van 'n lid wat volhou om aangeleenthede wat nie ter sake is nie te bespreek of om sy eie argumente of dié van 'n ander lid in die debat tot vervelens toe te herhaal, kan hy die lid gelas om sy toespraak te staak en sy sitplek in te neem.

Wanneer lede in die rede geval mag word

102. Geen lid mag 'n ander lid wat aan die woord is, in die rede val nie, behalwe—

(a) wanneer hy op 'n punt van orde opstaan, en dan moet die lid wat aan die woord was, gaan sit, en die lid wat opgestaan het, moet slegs die punt noem waarop hy die aandag wil vestig en dit aan die Voorsitter voorlê vir sy beslissing; of

(b) om 'n tersaaklike vraag aan die spreker te stel met die toestemming van die Voorsitter.

Beledigende taal buite die orde

103. Dit is buite die orde om aanstootlike en beledigende taal omtrent lede van die Gemeenskapsraad te gebruik.

Toeskrywing van onbehoorlike motiewe buite die orde

104. 'n Lid mag nie onbehoorlike motiewe aan 'n ander lid toeskryf nie.

Persoonlike aanvalle buite die orde

105. 'n Lid mag nie 'n persoonlike aanval ten opsigte van enige ander lid maak nie.

Aanstootlike uitdrukkings omtrent Gemeenskapsraad buite die orde

106. 'n Lid mag nie aanstootlike uitdrukkings oor die bestuur van verrigtings by vergaderings van die Gemeenskapsraad gebruik nie.

University of Pretoria
Faculty of Excellence

Alleged improper conduct

107. The personal conduct or any alleged improper motives of a member shall not be referred to except on a motion moved for that purpose.

Disorderly conduct of members

108. The Chairman shall order a member whose conduct is grossly disorderly or who fails to comply with an order made under regulation 101, to withdraw forthwith from the Chamber for the remainder of the meeting and should he fail to do so the Chairman may cause him to be ejected from the Chamber and take such reasonable steps as are necessary to ensure that such member does not return to the meeting.

Chairman's powers to adjourn or suspend meeting of Community Council

109. In the case of great disorder arising during a meeting of the Community Council the Chairman may adjourn or suspend the meeting for such reasonable period as he may determine.

Appointment of committees of Community Council

110. (1) Any committee of the Community Council shall be appointed by the Council at a meeting of the Council.

(2) The Community Council shall determine the terms of reference and the powers and duties of such committee at such meeting: Provided that it may from time to time at any meeting thereof amend such terms of reference and add to or withdraw any such powers and duties.

(3) Members of a committee to which the Community Council has assigned any of its powers and duties shall remain in office until the day before the day fixed for the holding of the next ensuing general meeting referred to in regulation 65.

Constitution of committees of Community Council

111. A committee shall consist of not less than three and not more than seven members of the Community Council.

Chairman of committee

112. The Community Council shall appoint the chairman of every committee: Provided that if such chairman is unable to be present at any meeting of such committee the committee shall, from their own ranks, elect another chairman whose tenure of office shall be for the day of his election.

Meetings of committees of Community Council

113. (1) A committee shall meet on the date and at the time determined by the chairman thereof in consultation with the members thereof.

(2) The meetings of any committee shall be held in private unless the committee otherwise orders: Provided that this provision shall not be so interpreted as to exclude officials or witnesses necessarily associated with the business of such committee.

(3) Notwithstanding the provisions of subregulation (2), members of the Community Council who are not members of a particular committee thereof may be present at any meeting of such committee and take part in the discussion, but shall not have the power to vote.

Beweerde onbehoorlike gedrag

107. Daar mag nie verwys word na die persoonlike gedrag of enige beweerde onbehoorlike motiewe van 'n lid nie, behalwe na 'n mosie vir daardie doel ingedien.

Wanordelike gedrag van lid

108. Die Voorsitter gelas 'n lid wie se gedrag uiters wanordelik is of wat versuim om te voldoen aan 'n opdrag gegee kragtens regulasie 101, om die Raadsaal onverwyld vir die res van die vergadering te verlaat en as hy versuim om dit te doen, kan die Voorsitter hom uit die Raadsaal laat verwyder en sodanige redelike stappe doen as wat nodig is om te verseker dat sodanige lid nie na die vergadering terugkeer nie.

Voorsitter se bevoegdhede om vergadering van Gemeenskapsraad te verdaag of op te skort

109. Ingeval groot wanordelikheid gedurende 'n vergadering van die Gemeenskapsraad ontstaan, kan die Voorsitter die vergadering verdaag of opskort vir 'n redelike tydperk deur hom bepaal.

Aanstelling van komitees van Gemeenskapsraad

110. (1) 'n Komitee van die Gemeenskapsraad word aangestel op 'n vergadering van die Gemeenskapsraad.

(2) Die Gemeenskapsraad bepaal die opdragte aan en die bevoegdhede en pligte van sodanige komitee op sodanige vergadering: Met dien verstande dat dit van tyd tot tyd op 'n vergadering daarvan sodanige opdragte kan wysig en tot sodanige bevoegdhede en pligte byvoeg of enige sodanige bevoegdhede en pligte intrek.

(3) Lede van 'n komitee waaraan die Gemeenskapsraad enige van sy bevoegdhede en pligte opgedra het, beklee hul ampte tot die dag wat die dag wat bepaal is vir die hou van die daaropvolgende algemene vergadering in regulasie 65 bedoel, voorafgaan.

Samestelling van komitees van Gemeenskapsraad

111. 'n Komitee bestaan uit minstens drie en hoogstens sewe lede van die Gemeenskapsraad.

Voorsitter van komitee

112. Die Gemeenskapsraad stel die voorsitter van elke komitee aan: Met dien verstande dat indien sodanige voorsitter nie in staat is om teenwoordig te wees op 'n vergadering van sodanige komitee nie, verkies die komitee uit die geledere 'n ander voorsitter wie se ampstermyn die dag van sy verkiesing is.

Vergaderings van komitees van Gemeenskapsraad

113. (1) 'n Komitee sit op die datum en tyd deur die voorsitter daarvan bepaal in oorleg met die lede daarvan.

(2) Die vergaderings van 'n komitee is privaat, tensy die komitee anders gelas: Met dien verstande dat hierdie bepaling nie uitgelê word as sou dit beamptes of getuies wat noodsaaklikerwys geassosieer is met die werksaamhede van sodanige komitee uitsluit nie.

(3) Ondanks die bepalings van subregulasie (2), kan lede van die Gemeenskapsraad wat nie lede is van 'n besondere komitee daarvan nie, teenwoordig wees by 'n vergadering van sodanige komitee en aan die bespreking deelneem, maar hulle het nie die reg om te stem nie.

Together in Excellence

Quorum

114. Any number of members exceeding half the number of the members of any committee shall form a quorum.

Procedure when quorum not present

115. (1) If after the expiration of 20 minutes after the time at which any meeting of any committee is appointed to be held, a quorum is not assembled, no meeting shall take place. If the members of the committee present unanimously consent thereto, a further period, not exceeding 10 minutes, may be permitted to enable a quorum to assemble, but the members present may by a majority decision at any stage, after 10 minutes past the time appointed for such meeting, request the chairman to convene a further meeting within seven days, at which meeting, notwithstanding the provisions of regulation 114, the members present shall form a quorum.

(2) If during the sitting of any meeting of a committee a quorum is found not to be present no further business shall be conducted until a quorum is reassembled. Should a quorum not be present and 10 minutes elapse after the attention of the chairman is drawn to the absence of a quorum, the meeting shall stand adjourned until a time to be determined by the chairman in consultation with the members thereof present.

(3) If from the number of members voting it appears that a quorum is not present the voting shall be invalid.

How question before Community Council or committee is to be decided

116. All questions before the Community Council or any committee of the Community Council shall be determined by a majority of votes of the members present and in the case of an equality of votes the chairman of the meeting shall have a second or casting vote.

Mode of putting question for decision

117. When the Chairman or chairman of a committee, as the case may be, puts a question for decision, he shall do so by saying: "All agreed?" and if any member says "No" he shall order that a ballot be taken by show of hands and shall then total the number of votes cast for and against the question and declare the number to the Council or committee, as the case may be.

Minutes of meetings

118. (1) The Secretary of the Community Council shall cause the minutes of the proceedings at any meeting of the Community Council and meetings of any committee of the Community Council to be recorded and there shall be noted in such minutes the names of every member and official present.

(2) Such minutes shall be confirmed at the next ensuing general meeting of the Community Council or the next ensuing meeting of such committee and the Chairman or the chairman of the committee, as the case may be, shall thereafter sign them.

(3) If a copy of such minutes has been sent to each member at least two days prior to the meetings referred to in subregulation (2), such minutes shall be taken as read with a view to confirmation.

(4) No motion, proposal or discussion shall be allowed on the minutes, except as to their accuracy.

Kworum

114. Enige getal lede wat meer as die helfte van die getal lede van 'n komitee is, vorm 'n kworum.

Prosedure wanneer kworum nie teenwoordig nie

115. (1) Indien daar na verloop van 20 minute na die tyd waarop 'n vergadering van 'n komitee moet begin geen kworum is nie, vind geen vergadering plaas nie. Indien die aanwesige lede van die komitee dit eens is, kan 'n verdere tydperk van hoogstens 10 minute toegelaat word om 'n kworum te laat byeenkom, maar die aanwesige lede kan, deur 'n meerderheidsbeslissing te eniger tyd na verloop van 10 minute na die tyd waarop sodanige vergadering moet begin, die voorsitter versoek om 'n verdere vergadering binne sewe dae te belê, en by sodanige vergadering, ondanks die bepalings van regulasie 114, maak die lede teenwoordig 'n kworum uit.

(2) Indien daar gedurende die sitting van 'n vergadering van 'n komitee bevind word dat 'n kworum nie teenwoordig is nie, word geen verdere sake behandel nie totdat 'n kworum opnuut byeengekom het. Indien 'n kworum nie teenwoordig is nie en 10 minute verstryk nadat die voorsitter se aandag op die gebrek aan 'n kworum gevestig is, word die vergadering verdaag tot 'n tyd deur die voorsitter in oorleg met die aanwesige lede daarvan bepaal.

(3) As dit uit die getal lede wat deelneem aan 'n stemming, blyk dat 'n kworum nie teenwoordig is nie, is die stemming ongeldig.

Hoe mosie voor Gemeenskapsraad of komitee beslis word

116. Alle mosies voor die Gemeenskapsraad of 'n komitee van die Gemeenskapsraad word beslis deur 'n meerderheid van stemme van die aanwesige lede en by 'n staking van stemme het die voorsitter van die vergadering 'n tweede of beslissende stem.

Wyse waarop mosie vir beslissing voorgelê word

117. Wanneer die Voorsitter of die voorsitter van 'n komitee, na gelang van die geval, 'n mosie vir beslissing voorlê, doen hy dit deur te sê: "Stem almal saam?" en indien enige lid "Nee" sê, gelas hy 'n stemming deur die opsteek van hande en hy tel die getal stemme uitgebring vir en teen die mosie en daarna maak hy die getalle bekend aan die Gemeenskapsraad of komitee, na gelang van die geval.

Notule van vergaderings

118. (1) Die Sekretaris van die Gemeenskapsraad laat die notule van die verrigtings van 'n vergadering van die Gemeenskapsraad en vergaderings van 'n komitee van die Gemeenskapsraad hou en die naam van elke lid en beampte aanwesig word in sodanige notule aangeteken.

(2) Sodanige notule word bekragtig by die daaropvolgende algemene vergadering van die Gemeenskapsraad of die daaropvolgende vergadering van sodanige komitee en daarna onderteken die Voorsitter of die voorsitter van die komitee, na gelang van die geval, die notule.

(3) Indien 'n afskrif van sodanige notule minstens twee dae voor die vergaderings in subregulasie (2) bedoel aan elke lid gestuur is, word aanvaar dat sodanige notules met die oog op bekragtiging gelees is.

(4) Geen mosie, voorstel of bespreking ten opsigte van die notule, behalwe wat die juistheid daarvan betref, word toegelaat nie.

University of Fort Hare
Together in Excellence

CHAPTER 7
GENERAL

Member to look after interests of ward he represents

119. In addition to any other duties imposed on a member of the Community Council, such member shall, on behalf of the ward he represents and within the area for which the Community Council has been established look after the interests of such ward and keep the residents of the ward concerned informed of, and advise such residents regarding, matters affecting the general interest of the persons residing in such ward or area.

Provisions as to members being interested in contracts with the Community Council

120. No member of the Community Council shall, either on his own behalf or on behalf of a partnership in which he is interested, be concerned in or interested in any transaction, contract or arrangement whatsoever made by or with the Community Council with the exception of the purchase and sale or hiring of sites, premises or buildings.

Member not to have financial interest in matter before meeting

121. A member of the Community Council shall, at any meeting of the Community Council or any committee thereof, not be present during the discussion of or the voting on any matter in which either he, his spouse, his partner, the partner of his spouse, his employer (except the State) or the employer (except the State) of his spouse has a direct or indirect financial interest.

Payment of members

122. There shall be payable to members of the Community Council such allowances as the Minister after consultation with the Community Council and the Board shall determine.

General penalty

123. Any person who is convicted of an offence in terms of these Regulations shall be liable to a fine not exceeding R200 or, in default of payment, imprisonment for a period not exceeding six months.

Certain provisions applicable to persons referred to in section 3 (6) of the Act

124. The provisions of regulations 92 to 96 inclusive, and 98 to 106 inclusive, shall *mutatis mutandis* apply to any person referred to in section 3 (6) of the Act.

ANNEXURE A
COMMUNITY COUNCIL

Nomination of candidate for election of a member of the Community Council for ward.....

We, the undersigned ....., registered as voters in ward....., hereby nominate (name of candidate)..... for election as a member of the..... Community Council for ward.....

Name (to be printed)	Identity document number	Address	Signature
1.			
2.			
3.			
4.			
5.			
6.			
7.			
8.			
9.			
10.			

HOOFSTUK 7
ALGEMEEN

Lid behartig belange van wyk wat hy verteenwoordig

119. Benewens enige ander pligte aan 'n lid van die Gemeenskapsraad opgedra, moet 'n lid namens die wyk wat hy verteenwoordig die belange van daardie wyk binne die gebied waarvoor die Gemeenskapsraad ingestel is behartig en die inwoners van die betrokke wyk ingelig hou van en adviseer oor aangeleenthede rakende die algemene belang van die persone wat in sodanige wyk of gebied woon.

Bepalings aangaande lede wat belang het by kontrakte met Gemeenskapsraad

120. Geen lid van die Gemeenskapsraad mag òf vir homself òf namens 'n vennootskap waarin hy 'n belang het, betrokke wees by of 'n belang hê in enige transaksie, kontrak of reëling hoegenaamd aangegaan deur of met die Gemeenskapsraad, met uitsondering van die koop en verkoop of verhuur van persele of geboue.

Lid mag nie 'n geldelike belang in aangeleentheid voor vergadering hê nie

121. 'n Lid van die Gemeenskapsraad mag nie by 'n vergadering van die Gemeenskapsraad of 'n komitee daarvan teenwoordig wees nie tydens die bespreking van of stemming oor enige aangeleentheid waarin hy, sy eggenote, sy vennoot, die vennoot van sy eggenote, sy werkgewer (behalwe die Staat) of die werkgewer (behalwe die Staat) van sy eggenote, regstreeks of onregstreeks 'n geldelike belang het.

Betaling van lede

122. Die toelae wat die Minister na oorleg met die Gemeenskapsraad en die Raad bepaal, word aan die lede van die Gemeenskapsraad betaal.

Algemene strafbepaling

123. Iemand wat skuldig bevind word aan 'n misdryf ingevolge hierdie Regulasies is strafbaar met 'n boete van hoogstens R200 of, by wanbetaling, gevangenisstraf vir 'n tydperk van hoogstens ses maande.

Sekere bepalings van toepassing op persone in artikel 3 (6) van die Wet bedoel

124. Die bepalings van regulasies 92 tot en met 96 en 98 tot en met 106 is *mutatis mutandis* van toepassing op 'n persoon in artikel 3 (6) van die Wet bedoel.

AANHANGSEL A
GEMEENSKAPSRAAD

Nominasie van 'n kandidaat vir verkiesing van 'n lid van die Gemeenskapsraad vir wyk.....

Ons, die ondergetekendes....., wat in wyk.....as kiesers geregistreer is, nomineer hierby (naam van kandidaat)..... vir verkiesing as lid van die..... Gemeenskapsraad in wyk.....

Naam (in drukskrif)	Identiteitsdokumentnommer	Adres	Handtekening
1.			
2.			
3.			
4.			
5.			
6.			
7.			
8.			
9.			
10.			

University of Fort Hare

ACCEPTANCE OF NOMINATION BY CANDIDATE

I,.....,
Identity document No. ....., residing at.....,
hereby accept nomination for the election described above.

Date..... .....
Candidate's signature

ANNEXURE B
COMMUNITY COUNCIL
APPOINTMENT OF AGENT

This is to certify that I have appointed.....
(Identity document No.....), of
(address).....,
to be my agent to attend on my behalf at polling station
..... in ward ..... /the
counting of votes on/during the period.....

Candidate.....
(Identity document No.....)

Address of candidate.....
.....
.....
Date.....

ANNEXURE C
COMMUNITY COUNCIL
DECLARATION OF SECRECY

I, ...,
do hereby solemnly promise and declare that I will not at the election of members of the.....Community Council to be held on.....do anything forbidden by regulation 52 of the..... which I have read and which I fully understand.

.....
*Electoral Officer
*Presiding Officer
*Polling Officer
*Counting Officer
*Candidate
*Agent
*Witness

Address.....
.....
.....
Date.....

The above declaration was made and subscribed before me at....., this.....day of.....19.....

.....
*Justice of the Peace
*Commissioner of Oaths
*Electoral Officer
*Presiding Officer

* Delete whichever is not applicable.

ANNEXURE D
FORM OF FRONT OF BALLOT PAPER

TEENBLAD
COUNTERFOIL

No.....

Gemeenskapsraadverkiesing

Community Council Election

Wyk
Ward.....

Datum
Date.....

Volgnommer van kieser

Serial No. of voter

.....

Stem slegs vir een kandidaat.

Stem deur 'n X te maak in die vierkant teenoor die naam van die kandidaat vir wie u wil stem.

Vote for one candidate only.

Record your vote by placing an X in the square opposite the name of the candidate for whom you wish to vote.

AANVAARDING VAN NOMINASIE DEUR KANDIDAAT

Ek, ...,
Identiteitsdokumentnommer.....,
wat by.....woon, aanvaar hierby die nominasie vir die verkiesing hierbo beskryf.

Datum..... .....
Kandidaat se handtekening

AANHANGSEL B
GEMEENSKAPSRAAD
AANSTELLING VAN AGENT

Hierby word gesertifiseer dat ek.....
(Identiteitsdokumentnommer.....), van
(adres).....,
aangestel het as agent om namens my teenwoordig te wees by stemburo ..... in wyk..... /die tel van stemme op/gedurende die tydperk.....

Kandidaat.....
(Identiteitsdokumentnommer.....)

Adres van kandidaat.....
.....
.....
Datum.....

AANHANGSEL C
GEMEENSKAPSRAAD
VERKLARING VAN GEHEIMHOUDING

Ek, ...,
beloof hierby pligtig en verklaar dat ek by die verkiesing van lede van die.....Gemeenskaperaad wat op.....gehou word, niks sal doen nie wat by regulasie 52 van die.....verbode is, wat ek gelees het en volkome begryp.

.....
*Verkiesingsbeampte
*Voorsittende beampte
*Stemopnemer
*Telbeampte
*Kandidaat
*Agent
*Getuie

Adres.....
.....
.....
Datum.....

Bostaande verklaring is voor my afgelê en onderteken te.....op hede die.....dag van..... .....19.....

.....
*Vrederegter
*Kommissaris van Ede
*Verkiesingsbeampte
*Voorsittende beampte

* Skrap wat nie van toepassing is nie.

AANHANGSEL D
VORM VAN VOORKANT VAN STEMBRIEFIE

TEENBLAD
COUNTERFOIL

No.....

Gemeenskapsraadverkiesing

Community Council Election

Wyk
Ward.....

Datum
Date.....

Volgnommer van kieser

Serial No. of voter

.....

Stem slegs vir een kandidaat.

Stem deur 'n X te maak in die vierkant teenoor die naam van die kandidaat vir wie u wil stem.

Vote for one candidate only.

Record your vote by placing an X in the square opposite the name of the candidate for whom you wish to vote.

University of Fort Hare
Together in Excellence

FORM OF BACK OF BALLOT PAPER

Amptelike merk

Official mark

Verkiesing van 'n lid van die Gemeenskapsraad
Election of a member of the..... Community Council
vir die wyk
for the ward of.....
Datum
Date.....

ANNEXURE E
BALLOT PAPER RETURN

Election of a member of the..... Community
Council for ward..... held on..... .....
Polling station.....

Ballot papers received	Number	Ballot papers accounted for	Number
Ballot papers: Nos..... to..... inclusive	.....	Ballot papers in ballot box.....	.....
		Unused ballot papers: Nos..... to..... inclusive	.....
		Spoiled ballot papers	.....
		Tendered ballot papers	.....
Total number received	.....	Total number accounted for.....	.....

I hereby certify that the above is a correct return of all the ballot papers supplied to me.

Dated this.....day of.....19.....

Place..... .....
Presiding Officer

ANNEXURE F
LABEL

Election of a member of the.....Community
Council for ward.....
Contents.....
Date of poll.....

.....
*Presiding Officer
*Electoral Officer

* Delete whichever is not applicable.

VORM VAN AGTERKANT VAN STEMBRIEFIE

Amptelike merk

Official mark

Verkiesing van 'n lid van die Gemeenskapsraad
Election of a member of the..... Community Council
vir die wyk
for the ward of.....
Datum
Date.....

AANHANGSEL E
STEMBRIEFOPGAWE

Verkiesing van 'n lid van die.....
Gemeenskapsraad vir wyk.....gehou op.....
Stemburo.....

Stembriewe ontvang	Getal	Verantwoorde stembriewe	Getal
Stembriewe: No.'s..... tot en met.....	.....	Stembriewe in stembus.....	.....
		Ongebruikte stembriewe: No.'s..... tot en met.....	.....
		Bedorwe stembriewe	.....
		Aangebode stembriewe.....	.....
Totale getal ontvang	.....	Totale getal verantwoord.....	.....

Ek verklaar hierby dat bostaande 'n juiste opgawe is van alle stembriewe aan my verskaf.

Gedateer op hede die.....dag van.....19.....

Plek..... .....
Voorsittende beampte

AANHANGSEL F
ETIKET

Verkiesing van 'n lid van die.....Gemeenskapsraad
vir wyk.....
Inhoud.....
Datum van stemming.....

.....
*Voorsittende beampte
*Verkiesingsbeampte

* Skrap wat nie van toepassing is nie.

No. R. 1767 29 August 1980

ESTABLISHMENT OF A COMMUNITY COUNCIL FOR THE URBAN RESIDENTIAL AREA OF DAVEL

I, George de Villiers Morrison, Deputy Minister of Co-operation, hereby establish, on behalf of the Minister of Co-operation and Development by virtue of the powers vested in him by section 2 (1) of the Community Council's Act, 1977 (Act 125 of 1977), a community council for the urban residential area defined in the Schedule hereto.

G. DE V. MORRISON, Deputy Minister of Co-operation.

(File A2/14/2/D7)

SCHEDULE

Urban residential area	*Defined in Government Notice*
Davel (also known as kwaDela)	3015 of 1 August 1969.

No. R. 1767 29 Augustus 1980

INSTELLING VAN 'N GEMEENSKAPSRAAD VIR DIE STEDELIKE WOONGEBIED VAN DAVEL

Ek, George de Villiers Morrison, Adjunk-minister van Samewerking, stel hierby, namens die Minister van Samewerking en Ontwikkeling, kragtens die bevoegdheid hom verleen by artikel 2 (1) van die Wet op Gemeenskapsrade, 1977 (Wet 125 van 1977), 'n gemeenskapsraad in vir die stedelike woongebied omskryf in die Bylae hiervan.

G. DE V. MORRISON, Adjunk-minister van Samewerking.

(Lêer A2/14/2/D7)

BYLAE

Stedelike woongebied	*Omskryf by Goewermentskennisgewing*
Davel (ook bekend as kwaDela)	3015 van 1 Augustus 1969.

University of Pretoria
Tuisteer in Uitnemendheid

No. R. 1768 29 August 1980

REGULATIONS GOVERNING THE COMMUNITY COUNCIL OF DAVEL

I, George de Villiers Morrison, Deputy Minister of Co-operation, on behalf of and by direction of the Minister of Co-operation and Development, by virtue of the powers vested in him by section 11 (1) of the Community Council's Act, 1977 (Act 125 of 1977), hereby make the regulations contained in the accompanying Schedule.

G. DE V. MORRISON, Deputy Minister of Co-operation.

(File A2/14/2/D7)

SCHEDULE
CHAPTER 1
DEFINITIONS

1. In these Regulations, unless the context otherwise indicates—

"agent" means an agent appointed under regulation 23;

"Board" means the Eastern Transvaal Administration Board established by section 2 (1) of the Black Affairs Administration Act, 1971 (Act 45 of 1971), read with Government Notices R. 857 of 1973 and R. 630 of 1979;

"Chief Director" means the Chief Director of the Board;

"Commissioner" means the person appointed Commissioner, Davel, under section 2 (2) of the Black Administration Act, 1927 (Act 38 of 1927);

"committee" means any committee of the Community Council appointed under section 5 (1) (k) of the Act;

"Community Council" means the Davel Community Council established under section 2 (1) of the Act and "Council" has a corresponding meaning;

"corrupt practice" means any of the offences of treating, undue influence, bribery and personation;

"electoral officer" means the electoral officer referred to in regulation 15 and includes an assistant electoral officer;

"identity document" means a reference book referred to in the Black (Abolition of Passes and Co-ordination of Documents) Act, 1952 (Act 67 of 1952), and a passport, permit, document of identity or other travel document referred to in the Admission of Persons to the Republic Regulation Act, 1972 (Act 59 of 1972);

"illegal practice" means any of the offences created by regulations 58, 59 and 60;

"member" means a member of the Community Council;

"registered occupier" means a person over the age of 18 years to whom a site, residential, hostel or lodger's permit or certificate of occupation has been issued in terms of the Regulations contained in the Schedule to Government Notice R. 1036 of 1968, any person over the age of 18 years to whom the township manager has issued a permit permitting him to occupy any approved dwelling on any church, school or institutional site and the person over the age of 18 years whose name appears on such permit or certificate as well as any child of such permit or certificate holder over the age of 18 years who lawfully resides continuously with such permit or certificate holder: Provided that any person who derives his right to remain in the area concerned from a permission granted under section 10 (1) (d) of the principal Act, shall not be considered to be such a registered occupier;

No. R. 1768 29 Augustus 1980

REGULASIES BETREFFENDE DIE GEMEENSKAPSRAAD VAN DAVEL

Ek, George de Villiers Morrison, Adjunk-minister van Samewerking, vaardig hierby, namens en in opdrag van die Minister van Samewerking en Ontwikkeling, kragtens die bevoegdheid hom verleen by artikel 11 (1) van die Wet op Gemeenskapsrade, 1977 (Wet 125 van 1977), die regulasies uit wat in die bygaande Bylae vervat is.

G. DE V. MORRISON, Adjunk-minister van Samewerking

(Lêer A2/14/2/D7)

BYLAE
HOOFSTUK 1
WOORDOMSKRYWING

1. In hierdie Regulasies, tensy uit die samehang anders blyk, beteken—

"agent" 'n agent aangestel kragtens regulasie 23;

"die Hoofwet" die Swartes (Stadsgebiede) Konsolidasiewet, 1945 (Wet 25 van 1945);

"die Wet" die Wet op Gemeenskapsrade, 1977 (Wet 125 van 1977);

"dorpsbestuurder" enige beampte aangewys kragtens artikel 22 van die Hoofwet en gelisensieer kragtens Goewermentskennisgewing 552 van 1958 om die stedelike woongebied waarvoor die Gemeenskapsraad ingestel is, te bestuur, asook die behoorlike aangestelde en gelisensieerde adjunk en assistent van sodanige beampte;

"Gemeenskapsraad" die Davelse Gemeenskapsraad ingestel kragtens artikel 2 (1) van die Wet;

"geregistreerde bewoner" 'n persoon bo die ouderdom van 18 jaar aan wie 'n perseel-, woon-, tehuis- of loseerderspermit of 'n sertifikaat van bewoning kragtens die Regulasies vervat in die Bylae van Goewermentskennisgewing R. 1036 van 1968 uitgereik is, 'n persoon bo die ouderdom van 18 jaar aan wie die dorpsbestuurder 'n permit uitgereik het om 'n goedgekeurde woning op 'n kerk-, skool- of inrigtingsterrein te bewoon en die persoon bo die ouderdom van 18 jaar wie se naam op sodanige permit of sertifikaat verskyn, asook enige kind bo die ouderdom van 18 jaar van sodanige permit- of sertifikaathouer wat wettiglik, onafgebroke by sodanige permit- of sertifikaathouer inwoon: Met dien verstande dat 'n persoon wat sy reg om in die betrokke woongebied te bly, ontleen aan 'n vergunning kragtens artikel 10 (1) (d) van die Hoofwet verleen, nie as sodanige geregistreerde bewoner beskou word nie;

"Hoofdirekteur" die Hoofdirekteur van die Raad;

"identiteitsdokument" 'n bewysboek in die Swartes (Afskaffing van Passe en Koördinering van Dokumente) Wet, 1952 (Wet 67 van 1952), bedoel en 'n paspoort, permit, identifikasiebewys of ander reisdokument in die Wet op die Reëling van die Toelating van Persone tot die Republiek, 1972 (Wet 59 van 1972), bedoel;

"kieser" iemand wat ingevolge regulasie 3 bevoeg is om by 'n verkiesing van verkose lede van die Gemeenskapsraad te stem en wie se naam op 'n kieserslys in regulasie 4 bedoel, voorkom;

"komitee" 'n komitee van die Gemeenskapsraad aangestel kragtens artikel 5 (1) (k) van die Wet;

"Kommissaris" die persoon aangestel as Kommissaris, Davel, kragtens artikel 2 (2) van die Swart Administrasie Wet, 1927 (Wet 38 van 1927);

The Library of Fort Hare
To know in excellence

"Secretary of the Community Council" means the person appointed or employed as such by the Community Council under section 5 (1) (i) of the Act;

"the Act" means the Community Council's Act, 1977 (Act 125 of 1977);

"the principal Act" means the Black (Urban Areas) Consolidation Act, 1945 (Act 25 of 1945);

"township manager" means any officer appointed in terms of section 22 of the principal Act and licensed under Government Notice 552 of 1958 to manage the urban residential area for which the Community Council has been established and includes the duly appointed and licensed deputy and assistant of such officer;

"voter" means any person who is qualified to vote at any election of elected members of the Community Council in terms of regulation 3 and whose name appears on any voters' list referred to in regulation 4.

CHAPTER 2

DELIMITATION

Delimitation of wards

2. (1) The Board shall divide the area for which the Community Council has been established into six wards.

(2) Such division shall be made within one month after the date of publication of these Regulations and thereafter at intervals of not less than five years and not more than 10 years commencing from the last delimitation of wards.

(3) Details of such division shall be made available for inspection at the office of the township manager.

CHAPTER 3

VOTERS AND VOTERS' LISTS

Qualification of voters

3. Only persons who are citizens of the Republic of South Africa or any territory which previously formed part of the Republic and who are registered occupiers within the area for which the Community Council has been established and whose names appear on the voters' list, shall be qualified to vote at any election of elected members of the Community Council.

Voters' lists

4. (1) Within two months of the delimitation of wards under regulation 2, the electoral officer shall prepare for each ward a list of persons who are entitled to vote.

(2) The lists prepared after any such delimitation of wards shall come into operation immediately after they have been so prepared by the electoral officer.

(3) Until the coming into operation of the voters' lists prepared after the delimitation of wards, the current voters' lists shall continue to be valid, but thereafter the lists prepared after such delimitation shall be the voters' lists for the respective wards.

(4) The voters' lists prepared for the various wards after any delimitation of wards shall be—

(a) supplemented by the insertion therein of the names of voters whose names do not appear therein and who have satisfied the electoral officer that they are qualified to have their names inserted therein; and

(b) further adjusted by the deletion of the name of any person who is dead or no longer qualifies for continuance of registration as a voter.

"korrupte bedrywigheid" enige van die misdrywe van trakteerdery, onbehoorlike beïnvloeding, omkopery en uitgee vir 'n ander;

"lid" 'n lid van die Gemeenskapsraad;

"onwettige bedrywigheid" enige van die misdrywe geskep deur regulasies 58, 59 en 60;

"Raad" die Oos-Transvaal Administrasieraad ingestel by artikel 2 (1) van die Wet op Administrasie van Swart Sake, 1971 (Wet 45 van 1971), saamgelees met Goewermentskennisgewings R. 857 van 1973 en R. 630 van 1979.

"Sekretaris van die Gemeenskapsraad" die persoon wat kragtens artikel 5 (1) (i) van die Wet as sodanig deur die Gemeenskapsraad aangestel of in diens van die Gemeenskapsraad is;

"verkiesingsbeampte" die verkiesingsbeampte in regulasie 15 bedoel en ook 'n assistent-verkiesingsbeampte.

HOOFSTUK 2

AFBAKENING

Afbakening van wyke

2. (1) Die Raad verdeel die gebied waarvoor die gemeenskapsraad ingestel is in ses wyke.

(2) Sodanige verdeling word binne een maand na die datum van publikasie van hierdie Regulasies gedoen en daarna met tussenpose van minstens vyf jaar en hoogstens 10 jaar, gereken van die jongste afbakening van wyke.

(3) Besonderhede van sodanige verdeling word vir inspeksie by die kantoor van die dorpsbestuurder beskikbaar gestel.

HOOFSTUK 3

KIESERS EN KIESERSLYSTE

Kwalifikasie van kiesers

3. Alleenlik burgers van die Republiek van Suid-Afrika of 'n gebied wat voorheen deel van die Republiek uitgemaak het en wat geregistreerde bewoners is binne die gebied waarvoor die Gemeenskapsraad ingestel is en wie se name op die kieserslys verskyn, kwalifiseer om by 'n verkiesing van gekose lede van die Gemeenskapsraad te stem.

Kieserslyste

4. (1) Binne twee maande na die afbakening van wyke kragtens regulasie 2 moet die verkiesingsbeampte 'n lys van persone wat geregtig is om te stem, vir elke wyk opstel.

(2) Die lyste wat na sodanige afbakening van wyke opgestel is, tree in werking onmiddellik nadat dit aldus deur die verkiesingsbeampte opgestel is.

(3) Die lopende kieserslyste bly van krag totdat die kieserslyste wat na die afbakening van wyke opgestel is in werking tree, en daarna is die lyste wat na sodanige afbakening opgestel is, die kieserslyste vir die onderskeie wyke.

(4) Die kieserslyste wat na 'n afbakening van wyke vir die verskillende wyke opgestel is, word—

(a) aangevul deur die opname daarin van die name van kiesers wie se name nie daarin verskyn nie en wat die verkiesingsbeampte daarvan oortuig dat hul kwalifiseer vir die opname van hul name daarin; en

(b) verder aangepas deur die skrapping daarin van die name van kiesers wat oorlede is of nie langer bevoeg is om as 'n kieser geregistreer te wees nie.

University of Fort Hare
Together in Excellence

CONT

University of Fort Hare
Together in Excellence

Voters' list in which voter's name is to be entered

5. No person's name shall be entered in a voters' list for any particular ward unless he actually resides in such ward on the date on which his name is so entered in the voters' list.

Particulars to be shown in voters' list

6. A voters' list shall show in respect of every person whose name is included therein—

(a) a serial number;

(b) his surname and immediately thereafter his first names;

(c) his residential address; and

(d) his identity document number;

in order of house numbers and, in the case of persons resident in hostels, all surnames shall be in alphabetical order.

Permanent change in the place of residence of voter

7. (1) Whenever there has been a permanent change in the place of residence of a voter, he shall forthwith notify the electoral officer of the change.

(2) On receipt of any such notification the electoral officer shall amend the voters' list or lists as circumstances may require.

List of insertions

8. On the first day of every month the electoral officer shall prepare in respect of each ward, a list of insertions, *mutatis mutandis* in the form prescribed in regulation 6 in respect of a voters' list, showing the names inserted in terms of regulations 4 (4) (a) and 7 (2) in the voters' list for the ward in question during the immediately preceding month.

Amendment of voters' list by electoral officer

9. (1) Subject to the provisions of subregulations (2) and (3), the electoral officer shall, if he is satisfied as to the relative facts, amend the voters' list for any ward by—

(a) correcting any mistake, supplying any omission or recording any change in the particulars of the registration of any person;

(b) after ascertaining by virtue of the provisions of regulation 7 that a person has ceased to be permanently resident in the ward in which he is registered as a voter, transferring his name to the list in respect of the ward to which he has moved, or, in the case of a person who has left the area for which the Community Council has been established, removing his name from the list;

(c) removing the name of any person who is dead or no longer qualifies for continuance of registration as a voter;

(d) removing any superfluous entry where the name of the same person appears more than once in the same voters' list or in voters' lists for more than one ward.

(2) Before removing the name of any person from the voters' list, or adding it thereto, the electoral officer shall, by such means as are practicable satisfy himself that the name relates to the person concerned.

(3) The electoral officer shall cause a copy of a list containing the names of persons who no longer qualify for continuance of registration as voters and whose names were removed from the voters' list during any month, to be displayed on the notice board at the township manager's office for a period of at least 30 days commencing not later than the 20th day of the next ensuing month.

Kieserslys waarin kiesersnaam ingeskryf moet word

5. Geen persoon se naam word in 'n kieserslys vir 'n besondere wyk ingeskryf nie tensy hy inderdaad in sodanige wyk woon op die datum waarop sy naam aldus in die kieserslys ingeskryf word.

Besonderhede wat op 'n kieserslys aangegee moet word

6. Op 'n kieserslys moet ten aansien van iedere persoon wie se naam daarin opgeneem is, aangegee word—

(a) 'n volgnommer;

(b) sy van en onmiddellik daarna sy voorname;

(c) sy woonadres; en

(d) sy identiteitsdokumentnommer;

in volgorde van huisnommers, en in die geval van persone woonagtig in tehuise, moet alle vanne in alfabetiese volgorde wees.

Permanente verandering in verblyfplek van kieser

7. (1) Wanneer daar 'n permanente verandering plaasvind in die verblyfplek van 'n kieser, stel hy onverwyld die verkiesingsbeampte in kennis van die verandering.

(2) By ontvangs van so 'n kennisgewing, wysig die verkiesingsbeampte die kieserslys of -lyste, na gelang van die omstandighede.

Lys van opnames

8. Die verkiesingsbeampte stel op die eerste dag van elke maand ten opsigte van elke wyk 'n lys van opnames op, *mutatis mutandis* in die vorm in regulasie 6 ten opsigte van 'n kieserslys voorgeskryf, waarin die name wat gedurende die onmiddellik voorafgaande maand ingevolge regulasies 4 (4) (a) en 7 (2) in die kieserslys vir die betrokke wyk opgeneem is.

Wysiging van kieserslys deur verkiesingsbeampte

9. (1) Behoudens die bepalings van subregulasies (2) en (3), wysig die verkiesingsbeampte, indien hy oortuig is ten opsigte van die feite wat ter sake is, die kieserslys vir 'n wyk deur—

(a) 'n fout in die besonderhede van die registrasie van 'n persoon te verbeter, 'n weglating daarin aan te vul of 'n verandering daarin aan te teken;

(b) na vasstelling uit kragte van die bepalings van regulasie 7 dat 'n persoon opgehou het om permanent in die wyk waarin hy as 'n kieser geregistreer is te woon, sy naam oor te plaas na die lys ten opsigte van die wyk waarheen hy verhuis het of, in die geval van 'n persoon wat die gebied waarvoor die Gemeenskapsraad ingestel is verlaat het, sy naam van die lys te verwyder;

(c) die naam van 'n persoon wat oorlede is of onbevoeg is om as kieser geregistreer te bly, te verwyder;

(d) 'n oortollige inskrywing te verwyder, waar die naam van dieselfde persoon meer as een maal in dieselfde kieserslys of in kieserslyste vir meer as een wyk voorkom.

(2) Alvorens die naam van 'n persoon uit die kieserslys te verwyder of dit daarin by te voeg, vergewis die verkiesingsbeampte hom deur sodanige middele as wat uitvoerbaar is, daarvan dat die naam op die betrokke persoon betrekking het.

(3) Die verkiesingsbeampte laat 'n afskrif van 'n lys bevattende die name van persone wat onbevoeg is om as kiesers geregistreer te bly en wie se name gedurende enige maand van die kieserslys verwyder is, op die aanplakbord by die dorpsbestuurder se kantoor vertoon vir 'n tydperk van minstens 30 dae beginnende voor of op die 20ste dag van die daaropvolgende maand.

IN LUMINE TUO VIDEBIMUS LUMEN
University of Pretoria

When voters' lists to be printed

10. (1) The voters' lists as prepared and supplemented and further adjusted from time to time in accordance with the provisions of these Regulations, shall be printed, subject to the provisions of subregulation (2), not later than one month before an election referred to in regulation 19, and at such other times as the electoral officer considers necessary.

(2) The voters' lists printed for the purposes of an election referred to in subregulation (1) shall be the voters' lists for the wards in question as supplemented and further adjusted from time to time up to and including the last day of the month preceding the month in which the notice referred to in regulation 19 is issued.

(3) A voters' list printed for the purposes of an election referred to in subregulation (1), shall not be amended and shall prior to such election be made available for inspection for a period of at least 14 days at the office of the township manager within whose area of jurisdiction the ward is situated.

Voters' lists not invalidated by reason of errors

11. If through accident, inadvertence or oversight, anything required by law to be done in the preparation of any voters' list is erroneously done or omitted to be done, the voters' list shall not be invalidated thereby and the electoral officer may take or cause to be taken such steps as are necessary to rectify the error or omission.

CHAPTER 4

QUALIFICATIONS

12. Subject to the provisions of section 3 (5) of the Act, no person shall be qualified to be or remain a member of the Community Council if he—

(a) is not a registered occupier in the area for which the Community Council has been established;

(b) is not a voter;

(c) is in arrears for more than two months with any charges, fees or other dues payable by him to the Board or the Community Council on the day when nominations of candidates for the election of members of the Community Council close;

(d) has, within the period of three years immediately preceding the date of his nomination for election, been convicted of any offence in respect of which he has been sentenced to imprisonment without the option of a fine for a period of more than six months;

(e) is being detained as mentally disordered or defective under the Mental Disorders Act, 1916 (Act 38 of 1916), or the Mental Health Act, 1973 (Act 18 of 1973);

(f) is an employee of the Community Council;

(g) is prohibited in terms of section 2 (4) of the Riotous Assemblies Act, 1956 (Act 17 of 1956), from attending gatherings, and particulars of the notice addressed to him under the said section 2 (4) have been published in the *Government Gazette* in terms of section 2 (5) of the said Act;

(h) is prohibited in terms of section 5 (1) (e) or section 9 (1) of the Internal Security Act, 1950 (Act 44 of 1950), from attending gatherings;

(i) is a person whose name appears on a list compiled in terms of the provisions of section 4 (10) of the Internal Security Act, 1950 (Act 44 of 1950), and published in the *Government Gazette* in terms of section 8 (4) of the said Act.

Wanneer kieserslyste gedruk moet word

10. (1) Die kieserslyste, soos ooreenkomstig die bepalings van hierdie Regulasies opgestel en van tyd tot tyd aangevul en verder aangepas, word, behoudens die bepalings van subregulasie (2), gedruk uiterlik een maand voor 'n verkiesing in regulasie 19 bedoel, en op die ander tye wat die verkiesingsbeampte nodig ag.

(2) Die kieserslyste wat vir die doeleindes van 'n verkiesing in subregulasie (1) bedoel, gedruk word, is die kieserslyste vir die betrokke wyke soos van tyd tot tyd aangevul en verder aangepas tot en met die laaste dag van die maand wat die maand waarin die in regulasie 19 bedoelde kennisgewing uitgevaardig word, voorafgaan.

(3) 'n Kieserslys wat vir die doeleindes van 'n verkiesing in subregulasie (1) bedoel, gedruk is, word nie gewysig nie en word voor sodanige verkiesing vir inspeksie beskikbaar gestel vir 'n tydperk van minstens 14 dae by die kantoor van die dorpsbestuurder binne wie se regsgebied die wyk geleë is.

Kieserslyste nie as gevolg van foute ongeldig nie

11. Indien per ongeluk, per abuis of deur onoplettendheid iets wat regtens by die opstel van 'n kieserslys gedoen moet word, verkeerd gedoen word of nie gedoen word nie, maak dit die kieserslys nie ongeldig nie, en kan die verkiesingsbeampte die stappe doen of laat doen wat nodig is om die fout te verbeter of om die versuim te herstel.

HOOFSTUK 4

KWALIFIKASIES

12. Behoudens die bepalings van artikel 3 (5) van die Wet, is geen persoon bevoeg om lid van die Gemeenskapsraad te wees of te bly nie indien hy—

(a) nie 'n geregistreerde bewoner binne die gebied waarvoor die Gemeenskapsraad ingestel is, is nie;

(b) nie 'n kieser is nie;

(c) op die dag waarop nominasies van kandidate vir die verkiesing van lede van die Gemeenskapsraad sluit, vir meer as twee maande agterstallig is met die betaling van vorderings, gelde of ander bedrae wat deur hom aan die Raad of die Gemeenskapsraad verskuldig is;

(d) binne die tydperk van drie jaar wat die datum van sy nominasie vir verkiesing onmiddellik voorafgaan, skuldig bevind is aan enige misdryf ten opsigte waarvan hy tot gevangenisstraf sonder die keuse van 'n boete vir 'n tydperk van meer as ses maande gevonnis is;

(e) kragtens die Wet op Geestesgebreken, 1916 (Wet 38 van 1916), of die Wet op Geestesgesondheid, 1973 (Wet 18 van 1973), as geestelik gekrenk of gebrekkig aangehou word;

(f) 'n werknemer van die Gemeenskapsraad is;

(g) kragtens artikel 2 (4) van die Wet op Oproerige Byeenkomste, 1956 (Wet 17 van 1956), verbied is om byeenkomste by te woon en besonderhede van die kennisgewing wat kragtens bedoelde artikel 2 (4) aan hom gerig is, kragtens artikel 2 (5) van bedoelde Wet in die *Staatskoerant* afgekondig is;

(h) kragtens artikel 5 (1) (e) of 9 (1) van die Wet op Binnelandse Veiligheid, 1950 (Wet 44 van 1950), verbied is om byeenkomste by te woon;

(i) iemand is wie se naam verskyn op 'n lys, saamgestel kragtens die bepalings van artikel 4 (10) van die Wet op Binnelandse Veiligheid, 1950 (Wet 44 van 1950), en in die *Staatskoerant* kragtens artikel 8 (4) van bedoelde Wet afgekondig is.

University of Fort Hare
Together in Excellence

CHAPTER 5

ELECTIONS

General elections

13. A general election of members of the Community Council shall take place not later than six months after the application of these Regulations and thereafter in every third year during September.

Term of office of members

14. (1) A member elected at a general election or an election held to fill a casual vacancy shall assume office on the date of such election.

(2) A member designated by the Minister under section 3 (2) of the Act shall assume office on a date determined by the Minister.

(3) A member shall, subject to the provisions of regulations 61 and 62, remain in office up to and including the day immediately preceding the next succeeding general election or until the term for which he was designated by the Minister in terms of section 3 (2) of the Act, has expired.

Electoral officer

15. (1) The Commissioner shall appoint, after consultation with the Board, an electoral officer and as many assistant electoral officers as he may deem necessary.

(2) The electoral officer shall be responsible for the conduct of elections of members of the Community Council.

Presiding officer, polling officers, counting officers and witnesses

16. The electoral officer shall appoint in writing a presiding officer and as many polling officers and witnesses as may be necessary for effectually taking poll at every polling station and he shall appoint as many counting officers as may be necessary for the counting of votes after the close of the poll.

Polling stations

17. There shall be polling stations at such place or places as the electoral officer deems necessary.

Members to be elected

18. One member shall be elected in respect of each ward.

Fixing of nomination and polling dates

19. (1) The electoral officer shall, not later than three months after the date of publication of these Regulations, and thereafter not later than the first day of August of each year in which a general election is to be held, call, in a notice which shall be in both official languages and shall be published in at least one newspaper which generally circulates in the area for which the Community Council has been established and shall be displayed on the notice board at each township manager's office situated in such area, for the nomination of candidates for the election of members of the Community Council.

(2) The notice referred to in subregulation (1) shall specify—

(a) the place at which and the date and time before which nominations shall be received by the electoral officer, which date shall be not less than 14 days and not more than 21 days from the date of first publication of such notice; and

(b) the places at which and the date, other than a Sunday, on which polling shall take place.

HOOFSTUK 5

VERKIESINGS

Algemene verkiesings

13. 'n Algemene verkiesing van lede van die Gemeenskapsraad word gehou uiterlik ses maande nadat hierdie Regulasies bekendgemaak is en daarna driejaarliks gedurende September.

Ampstermyn van lede

14. (1) 'n Lid verkies in 'n algemene verkiesing of 'n verkiesing gehou om 'n toevallige vakature te vul, aanvaar sy amp op die datum van sodanige verkiesing.

(2) 'n Lid deur die Minister kragtens artikel 3 (2) van die Wet aangewys, aanvaar sy amp op die datum deur die Minister bepaal.

(3) 'n Lid bly, behoudens die bepalings van regulasies 61 en 62, in sy amp aan tot en met die dag wat die eersvolgende algemene verkiesing onmiddellik voorafgaan of totdat die termyn waarvoor hy ingevolge artikel 3 (2) van die Wet deur die Minister aangewys is, verstryk.

Verkiesingsbeampte

15. (1) Die Kommissaris na oorlegpleging met die Raad, stel 'n verkiesingsbeampte en soveel assistent verkiesingsbeamptes as wat hy nodig ag, aan.

(2) Die verkiesingsbeampte is verantwoordelik vir die hou van verkiesings van lede van die Gemeenskapsraad.

Voorsittende beampte, stemopnemers, telbeamptes en getuies

16. Die verkiesingsbeampte stel skriftelik 'n voorsittende beampte en soveel stemopnemers en getuies aan as wat nodig is om die stemming doeltreffend te laat plaasvind by iedere stemburo en stel soveel telbeamptes aan as wat nodig is vir die tel van die stemme na die sluiting van die stemming.

Stemburo's

17. Daar moet stemburo's wees by sodanige plek of plekke as wat die verkiesingsbeampte nodig ag.

Lede wat verkies moet word

18. Een lid word verkies ten opsigte van elke wyk.

Bepaling van nominasie- en stemdatums

19. (1) Die verkiesingsbeampte moet binne drie maande na die bekendmaking van hierdie Regulasies en daarna uiters op die eerste dag van Augustus van elke jaar waarin 'n algemene verkiesing gehou staan te word, in 'n kennisgewing, in albei amptelike tale, wat afgekondig word in ten minste een nuusblad wat gewoonlik in die gebied waarvoor die Gemeenskapsraad ingestel is, versprei word en wat op die aanplakbord by elke dorpsbestuurder se kantoor in sodanige gebied geleë vertoon word, om nominasies vra van kandidate vir verkiesing tot lede van die Gemeenskapsraad.

(2) Die kennisgewing in subregulasie (1) bedoel, vermeld—

(a) die plek waar en die datum en tyd tot en met wanneer nominasies deur die verkiesingsbeampte ontvang sal word, welke datum minstens 14 dae en hoogstens 21 dae na die datum van eerste afkondiging van sodanige kennisgewing moet wees; en

(b) die plekke waar en die datum, uitgesonderd 'n Sondag, waarop stemming sal plaasvind.

IN LUMINE TUO VIDEBIMUS LUMEN
University of Fort Hare
Together in Excellence

Hours of poll

20. The poll shall commence at 07h00 and close at 21h00 on the polling day, but the presiding officer shall permit every voter who is at 21h00 inside the room in which the ballot box is, to record his vote before the closing of the poll.

Nominations of candidates

21. (1) Nominations of candidates for election as members of the Community Council shall be submitted in writing to the electoral officer in the form contained in Annexure A hereto, which form shall be supplied by the township manager, and shall be supported by the signatures of not less than 10 persons who are registered as voters in the ward for which the nomination is made.

(2) The electoral officer shall as soon as practicable, and not later than 14 days after the date referred to in subregulation (1), affix on the notice board at the office of the township manager a notice containing a list of the candidates duly nominated in terms of these Regulations and shall also declare those candidates who have been returned unopposed to be elected members for their respective wards.

Deposit by or on behalf of persons nominated

22. (1) There shall be deposited by or on behalf of each person nominated as a candidate for election as a member of the Community Council the sum of R20 with the electoral officer on or before the date and time referred to in regulation 19 (2) (a).

(2) If poll takes place and the total number of votes received thereat by any unsuccessful candidate is less than one-fifth of the number of votes received by the successful candidate the sum deposited by or on behalf of such unsuccessful candidate shall be forfeited and shall be paid into the funds of the Community Council.

(3) Save as is in this regulation expressly provided, the sum deposited shall be returned to the depositor.

Candidates and agents

23. (1) Any duly nominated candidate at an election of members of the Community Council may, in the form contained in Annexure B hereto, appoint one or more agents to assist him and shall advise the electoral officer in writing of the name(s) and address(es) of such agent or agents.

(2) The candidates and only one agent per candidate shall be allowed at any particular time to be present inside any polling station or any place where votes are counted.

(3) Any person appointed an agent in terms of subregulation (1) shall produce his letter of appointment to the electoral officer, presiding officer or polling officer, as the case may be, if required to do so.

Provision of equipment

24. (1) For all elections the electoral officer shall arrange for voting compartments, ballot boxes, ballot papers, instruments for marking ballot papers with the official mark and other requirements to be provided and shall do such other acts and make such arrangements to facilitate the taking of the poll as he may deem necessary for effectually conducting the election.

Ure van stemming

20. Stemming begin om 07h00 en sluit om 21h00 op die dag van stemming, maar die voorsittende beampte laat elke kieser wat om 21h00 binne die kamer waarin die stembus is, sy stem uitbring voor die sluiting van die stemming.

Nominasie van kandidate

21. (1) Die nominasie van kandidate vir verkiesing tot lede van die Gemeenskapsraad moet skriftelik by die verkiesingsbeampte ingedien word in die vorm in Aanhangsel A hiervan vervat en wat deur die dorpsbestuurder verskaf word en dit moet gestaaf word deur die handtekeninge van 10 persone wat as kiesers geregistreer is in die wyk ten opsigte waarvan sodanige nominasie geskied.

(2) Die verkiesingsbeampte moet so gou doenlik, en uiters 14 dae na die datum in subregulasie (1) bedoel, 'n kennisgewing met die lys van kandidate wat behoorlik ingevolge hierdie Regulasies genomineer is, op die aanplakbord by die kantoor van die dorpsbestuurder opplak en moet ook dié kandidate wat onbestrede verkies is, tot verkose lede vir hul onderskeie wyke verklaar.

Deposito deur of namens genomineerde persone

22. (1) Daar word op of voor die datum en tyd in regulasie 19 (2) (a) bedoel, deur of ten behoewe van elke persoon wat genomineer is as kandidaat vir verkiesing tot lid van die Gemeenskapsraad die bedrag van R20 by die verkiesingsbeampte gestort.

(2) Indien 'n stemming plaasvind en die totale getal stemme wat daarby op enige verslane kandidaat uitgebring is, minder is as 'n vyfde van die getal stemme van die suksesvolle kandidaat, word die bedrag wat deur of ten behoewe van sodanige verslane kandidaat gestort is, verbeur en in die fondse van die Gemeenskapsraad gestort.

(3) Behoudens die uitdruklike bepalings van hierdie regulasie, word die gestorte bedrag aan die deposant terugbetaal.

Kandidate en agente

23. (1) Enige behoorlik genomineerde kandidaat by 'n verkiesing van lede van die Gemeenskapsraad kan, in die vorm vervat in Aanhangsel B hiervan, een of meer agente aanstel om hom behulpsaam te wees, en hy moet die verkiesingsbeampte skriftelik in kennis stel van die naam (name) en adres(se) van sodanige agent(e).

(2) Die kandidate en slegs een agent per kandidaat word toegelaat om op enige bepaalde tydstip binne enige stemburo of by enige plek waar stemme getel word, teenwoordig te wees.

(3) 'n Persoon wat kragtens subregulasie (1) as agent aangestel is, moet sy aanstellingsbrief toon aan die verkiesingsbeampte, voorsittende beampte of stemopnemer na gelang van die geval, indien dit van hom verlang word.

Verskaffing van uitrusting

24. (1) Die verkiesingsbeampte reël by alle verkiesings dat stemhokkies, stembusse, stembriewe, toestelle om die stembriewe met die amptelike merk te merk en ander benodigdhede verskaf word en doen sodanige ander stappe en tref sodanige reëlings ter vergemakliking van die stemming as wat hy nodig ag ten einde die verkiesing op doeltreffende wyse te laat geskied.

(2) The equipment and requirements in connection with any election shall be supplied by and all expenditure in this connection shall be for the account of the Community Council: Provided that the equipment and requirements in connection with the first election shall be supplied by and all expenditure in connection with such election shall be for the account of the Board.

Polling station at which voter shall vote

25. A voter voting in the area of jurisdiction of the Community Council may only vote at a polling station situated in the ward in which he is registered as a voter.

Declaration of secrecy

26. (1) The electoral officer and every presiding officer, polling officer, candidate, agent, witness or any other person or official (except a policeman) entitled to attend at a polling station or at the counting of votes shall, before the opening of the poll, and every counting officer shall, before the commencement of the counting of votes, make, in duplicate, in the form contained in Annexure C hereto, a declaration of secrecy under oath before a justice of the peace or a commissioner of oaths, or before the electoral officer or a presiding officer who are hereby authorised to administer such oath.

(2) The original declaration of secrecy shall be handed to the electoral officer by the person who made it, before the opening of the poll or before the commencement of the counting of votes, as the case may be, and such person shall at all times during the polling or the counting of votes have the duplicate of such declaration of secrecy in his possession and shall on demand produce it to the electoral officer or the presiding officer for inspection.

Procedure at ballot

27. The presiding officer, in the presence of such candidates and agents as may be present, shall—

(a) before the commencement of the poll, seal each ballot box, leaving open an opening through which ballot papers may be inserted into the ballot box;

(b) at the closing of the poll, seal the opening referred to in paragraph (a).

Powers of the presiding officer at a polling station

28. (1) The presiding officer shall keep order at a polling station, shall regulate the number of voters to be admitted at any time and shall exclude all other persons except the electoral officer, the candidates or their agents, and policemen and other officials on duty.

(2) Save as is excepted in subregulation (1), the presiding officer may require any person (other than a person recording his vote) to leave the polling station and any person who fails to leave the polling station when so required may be arrested without a warrant on the order of the presiding officer and shall be guilty of an offence.

(3) The powers conferred by this Regulation shall not be exercised so as to prevent any voter who is otherwise entitled to vote from having an opportunity of voting at the polling station.

(2) Die Gemeenskapsraad verskaf die uitrusting en benodigdhede in verband met 'n verkiesing en alle uitgawes in verband met sodanige verkiesing is vir sy rekening: Met dien verstande dat die Raad die uitrusting en benodigdhede in verband met die eerste verkiesing verskaf en dat alle uitgawe in dié verband vir sy rekening is.

Stemburo waar kieser moet stem

25. 'n Kieser wat binne die regsgebied van die Gemeenskapsraad stem, kan alleenlik stem by 'n stemburo geleë binne die wyk waarin hy as kieser geregistreer is.

Verklaring van geheimhouding

26. (1) Die verkiesingsbeampte en elke voorsittende beampte, stemopnemer, kandidaat, agent, getuie of enige ander persoon of beampte (uitgesonderd 'n polisiebeampte) wat geregtig is om in 'n stemburo of by die tel van stemme teenwoordig te wees, moet voor die aanvang van die stemming, en elke telbeampte moet voor die aanvang van die tel van stemme, in die vorm vervat in Aanhangsel C hiervan, in duplikaat, 'n beëdigde verklaring van geheimhouding afle voor 'n vrederegter of 'n kommissaris van ede, of voor die verkiesingsbeampte of 'n voorsittende beampte wat hierby gemagtig word om sodanige eed af te neem.

(2) Die oorspronklike verklaring van geheimhouding word aan die verkiesingsbeampte, voor die aanvang van die stemming of die begin van die tel van stemme, na gelang van die geval, deur die persoon wat dit afgelê het, oorhandig en sodanige persoon moet die duplikaat van sodanige verklaring van geheimhouding te alle tye gedurende die stemming of tel van stemme in sy besit hê en moet dit op aandrang aan die verkiesingsbeampte of die voorsittende beampte vir inspeksie toon.

Prosedure by stemming

27. Die voorsittende beampte, in teenwoordigheid van sodanige kandidate en agente as wat teenwoordig is, verseël—

(a) voor die aanvang van die stemming, elke stembus maar laat 'n opening oop waardeur stembriewe in die stembus ingesit kan word;

(b) by die sluiting van die stemming, die opening in paragraaf (a) bedoel.

Bevoegdhede van voorsittende beampte by 'n stemburo

28. (1) Die voorsittende beampte hou orde by 'n stemburo, reël hoeveel kiesers tegelyk binnegelaat word en hou alle ander persone, uitgesonderd die verkiesingsbeampte, die kandidate of hulle agente en polisiebeamptes en ander beamptes op diens, buite.

(2) Behoudens die uitsonderings wat by subregulasie (1) gemaak word, kan die voorsittende beampte enige persoon (uitgesonderd 'n persoon wat sy stem uitbring) aansê om die stemburo te verlaat en enige persoon wat versuim om dit te doen wanneer dit van hom vereis word, begaan 'n misdryf en kan op bevel van die voorsittende beampte sonder lasbrief in hegtenis geneem word.

(3) Die bevoegdhede by hierdie Regulasie verleen, word nie so uitgeoefen dat dit 'n kieser wat andersins geregtig is om te stem, verhinder om sy stem by die stemburo uit te bring nie.

Ballot papers

29. Every ballot paper to be used for voters who wish to vote shall be in both official languages and in the form set out in Annexure D hereto, and there shall be printed or written on every ballot paper in alphabetical order the names of all the duly nominated candidates at the election and their addresses and occupations.

No voter to vote more than once

30. A voter shall, whether or not his name appears on more than one voters' list or more than once on the same voters' list, be entitled to cast at an election one vote only and no voter shall be entitled to vote unless he has produced to the presiding officer or a polling officer his identity document.

Identification of voters

31. (1) Save as provided in regulation 36, no enquiry shall be made at an election as to the identity of any person or his right to vote, except that the presiding officer may himself, and if required by any candidate or an agent of any candidate shall, after any person has established his identity in the manner contemplated in regulation 30, and before he is allowed to vote, put to him either or both of the following questions, but no other, namely:

(a) Are you the person whose name appears as A.B. on the list of voters in this ward?

(b) Have you already voted at this election in this or any other ward?

(2) Any person who fails to establish his identity in the manner contemplated in regulation 30 or who does not answer the first question distinctly and absolutely in the affirmative and the second question distinctly and absolutely in the negative, shall not be permitted to vote.

(3) A person who makes a false answer to either of those questions shall be guilty of an offence.

(4) The presiding officer may make enquiry of any other presiding officer at any polling station for the purpose of verifying an answer to either of the two questions referred to in subregulation (1), and may further order the arrest without warrant of any person who is suspected by him on reasonable grounds of making a false answer to either of such questions or of committing the offence of personation as defined in regulation 57.

(5) Every person empowered by law to make arrests shall carry out such an order of the presiding officer.

Manner of voting

32. (1) The voting at all elections held in terms of the provisions of these Regulations shall be by secret ballot.

(2) Every person who wishes to vote shall apply to the presiding officer or a polling officer for a ballot paper and such officer shall, if he is satisfied that such person is entitled to vote in the ward concerned and after determining that no ballot paper has already been issued at that polling station to that person at such election, he shall—

(a) call out the serial number and name of the voter as it appears on the voter's list;

(b) enter the serial number in the appropriate space on the counterfoil of the ballot paper that is to be issued to the voter;

Stembriewe

29. Elke stembrief wat gebruik word deur kiesers wat wil stem, moet in albei amptelike tale wees en in die vorm vervat in Aanhangsel D hiervan en op elke stembrief moet die name staan van al die behoorlik genomineerde kandidate by die verkiesing in alfabetiese orde afgedruk of ingeskryf en hul adresse en beroepe.

Geen kieser mag meer as een maal stem nie

30. 'n Kieser is, ongeag of sy naam op meer as een kieserslys of meer as een maal op dieselfde kieserslys voorkom, geregtig om by 'n verkiesing slegs een stem uit te bring, en geen kieser is geregtig om te stem nie tensy hy sy identiteitsdokument aan die voorsittende beampte of 'n stemopnemer oorlê.

Identifikasie van kiesers

31. (1) Behoudens soos by regulasie 36 bepaal, word by 'n verkiesing geen navraag gedoen omtrent enige persoon se identiteit of sy reg om te stem nie, behalwe dat die voorsittende beampte nadat iemand sy identiteit op die wyse in regulasie 30 beoog, bewys het, en voordat hy toegelaat word om te stem, hom een van of albei die volgende vrae, en geen ander nie, uit die beweging kan, en op versoek van 'n kandidaat of 'n agent van 'n kandidaat moet, stel, naamlik:

(a) Is u die persoon wie se naam as A.B. op die kieserslys van hierdie wyk voorkom?

(b) Het u reeds in hierdie verkiesing of in 'n ander wyk gestem?

(2) Iemand wat versuim om sy identiteit op die wyse in regulasie 30 beoog, te bewys, of wat nie die eerste vraag duidelik en sonder voorbehoud bevestigend en die tweede duidelik en sonder voorbehoud ontkennend beantwoord nie, word nie toegelaat om te stem nie.

(3) Iemand wat op enigeen van daardie vrae 'n valse antwoord gee, is aan 'n misdryf skuldig.

(4) Die voorsittende beampte kan by 'n ander voorsittende beampte by enige stemburo navraag doen ten einde die waarheid van 'n antwoord op enigeen van die vrae in subregulasie (1) bedoel te toets en kan verder beveel dat enigiemand wat hy op redelike gronde verdink daarvan dat hy op enigeen van bedoelde vrae 'n valse antwoord gegee het, of hom skuldig maak aan die misdryf om hom vir 'n ander uit te gee, soos in regulasie 57 omskryf, sonder lasbrief in hegtenis geneem word.

(5) Iedereen wat regtens bevoeg is tot inhegtenisneming, voer so 'n bevel van die voorsittende beampte uit.

Wyse waarop gestem word

32. (1) Die stemming by alle verkiesings wat kragtens die bepalings van hierdie Regulasies gehou word, geskied by geheime stemming.

(2) Elke persoon wat wil stem, doen aansoek om 'n stembrief by die voorsittende beampte of 'n stemopnemer en sodanige beampte of stemopnemer, indien hy oortuig is dat sodanige persoon geregtig is om in die betrokke wyk te stem en nadat hy vasgestel het dat geen stembrief reeds aan daardie persoon by daardie stemburo by sodanige verkiesing uitgereik is nie, moet hy—

(a) die volgnommer en naam van die kieser soos dit op die kieserslys voorkom, uitroep;

(b) die volgnommer in die toepaslike ruimte op die teenblad van die stembrief wat aan die kieser uitgereik gaan word, inskryf;

University of Pretoria

(c) tear out the ballot paper and stamp the official mark on the back thereof in the space provided;

(d) fold the ballot paper so that the front thereof is on the inside and the official mark is on the outside and hand it to the applicant; and

(e) on the voters' list, draw a line through the serial number, identity document number and name of the voter as proof that a ballot paper has been issued.

(3) When the voter has received such ballot paper he shall take it to the compartment provided for that purpose and signify for whom he desires to vote by secretly placing a cross opposite the name of the candidate for whom he wishes to vote. He shall then fold the ballot paper so that the official mark can be seen and having held up the ballot paper so that the presiding officer or polling officer can recognise the official mark, shall drop the ballot paper in the ballot box placed in front of the presiding officer or polling officer.

(4) If the ballot paper that is about to be dropped into the ballot box has inadvertently not been marked with the official mark, the presiding officer or polling officer may cause such ballot paper to be so marked.

(5) If the presiding officer or polling officer has any reason to doubt that a ballot paper in the possession of a voter is the ballot paper issued to him, he may, for the purpose of comparing the numbers printed on the ballot paper and the counterfoil, request the voter to show him the number and official mark appearing on the back of the ballot paper and the voter shall do so.

(6) The voter shall vote without undue delay and shall leave the polling station as soon as he has put his ballot paper into the ballot box.

Voters who are unable to vote in the manner prescribed

33. (1) Any voter who is unable to vote in the prescribed manner may request the presiding officer or polling officer to complete his ballot paper on his behalf.

(2) Such presiding officer or polling officer, as the case may be, shall thereupon, with due regard to the maintenance of secrecy and in the presence of one witness and a person of the voter's own choice who shall accompany him, read to such voter the names of the candidates for the particular ward and affix a cross in the space provided on the ballot paper opposite the name of the candidate selected by word of mouth by such voter and shall thereafter fold the ballot paper and put it into the ballot box.

(3) In the performance of his functions under this regulation such polling officer shall disregard any document or thing exhibited or produced by or in the possession of the voter which indicates or suggests or purports to indicate or suggest the name of any candidate for whom such voter is or is not to vote.

Spoilt ballot papers

34. If a voter inadvertently spoils a ballot paper he may return it to the presiding officer or polling officer who, if he is satisfied of such inadvertence, shall give him another ballot paper and retain the spoilt ballot paper which he shall immediately cancel and endorse with the words "returned under regulation 34" and the fact of such cancellation shall be noted upon the counterfoil.

(c) die stembrief uitskeur en dit op die keersy in die ruimte voorsien met die amptelike merk, merk;

(d) die stembrief vou sodat die voorkant daarvan aan die binnekant en die amptelike merk aan die buitekant is en dit aan die kieser oorhandig; en

(e) op die kieserslys 'n streep trek deur die volgnommer, identiteitsdokumentnommer en naam van die kieser, as bewys dat 'n stembrief uitgereik is.

(3) Wanneer die kieser sodanige stembrief ontvang, neem hy dit na die stemhokkie wat vir dié doel verskaf is en dui aan vir wie hy stem deur in die geheim 'n kruisie teenoor die naam van die kandidaat vir wie hy wil stem, aan te bring. Hy vou dan die stembrief sodat die amptelike merk sigbaar is en nadat hy die stembrief so opgehou het dat die voorsittende beampte of stemopnemer die amptelike merk kan herken, laat hy die stembrief val in die stembus wat voor die voorsittende beampte of stemopnemer staan.

(4) Indien die stembrief wat in die stembus ingesit staan te word, onopsetlik nie met die amptelike merk gemerk is nie, kan die voorsittende beampte of stemopnemer sodanige stembrief aldus laat merk.

(5) Indien die voorsittende beampte of stemopnemer om enige rede twyfel of 'n stembrief in besit van 'n kieser die stembrief is wat aan hom uitgereik is, kan hy, met die doel om die nommers gedruk op die stembrief en die teenblad te vergelyk, die kieser versoek om die nommer en amptelike merk op die keersy van die stembrief aan hom te toon, en die kieser moet dit doen.

(6) Die kieser moet sonder onnodige versuim sy stem uitbring en die stemburo verlaat sodra hy sy stembrief in die stembus geplaas het.

Kiesers wat nie in staat is om op die voorgeskrewe wyse te stem nie

33. (1) Enige kieser wat nie in staat is om sy stem op die voorgeskrewe wyse uit te bring nie, kan die verkiesingsbeampte of stemopnemer versoek om sy stembrief namens hom in te vul.

(2) Sodanige verkiesingsbeampte of stemopnemer, na gelang van die geval, moet daarop met behoorlike inagneming van die handhawing van geheimhouding en in teenwoordigheid van een getuie en 'n persoon van die kieser se eie keuse wat hom moet vergesel, aan sodanige kieser die name van die kandidate vir die bepaalde wyk voorlees en 'n kruis in die ruimte op die stembrief aanbring teenoor die naam van die kandidaat wat mondeling deur sodanige kieser gekies is, en moet daarna die stembrief vou en dit in die stembus plaas.

(3) By die verrigting van sy werksaamhede ingevolge hierdie regulasie moet sodanige stemopnemer enige dokument of ding verontagsaam wat deur die kieser vertoon of getoon word of in die kieser se besit is en wat die naam van enige kandidaat vir wie sodanige kieser moet stem of nie moet stem nie, aandui of suggereer of veronderstel is om dit aan te dui of te suggereer.

Bedorwe stembriewe

34. Indien 'n kieser onopsetlik 'n stembrief bederf, kan hy dit aan die voorsittende beampte of stemopnemer teruggee, en as laasgenoemde daarvan oortuig is dat dit onopsetlik gebeur het, gee hy hom 'n ander stembrief en behou hy die bedorwe stembrief wat hy onmiddellik kanselleer en teken hy die woorde "teruggegee kragtens regulasie 34" daarop aan, en die feit dat dit aldus gekanselleer is, word op die teenblad aangeteken.

Tendered ballot papers

35. If a person representing himself to be a particular voter applies for a ballot paper after another person has voted in his name, the applicant shall, upon duly answering the questions permitted by regulation 31 to be asked of voters at the time of polling, be entitled to mark a ballot paper in the same manner as any other voter, but the ballot paper shall not be put into the ballot box but shall be given to the presiding officer, endorsed by him with the name of the voter and his serial number on the voters' list and set aside in a separate packet.

Circumstances under which ballot paper may be refused by presiding officer

36. (1) If any candidate or an agent of any candidate or any voter makes before the presiding officer a declaration on oath stating that a person enrolled on the voters' list is dead or is so incapacitated by sickness, absence or otherwise, that it is impossible for such person to be present at the polling station to record his vote at the election then being held, the presiding officer shall refuse to hand a ballot paper to any person who applies for the same in the name of the person who is the subject of the declaration unless the person so applying proves his identity to the satisfaction of the presiding officer or makes a declaration on oath before the presiding officer that he is the person whose name appears on the voters' list for the ward and that the statements made in the first-mentioned declaration (which shall be read over to him) are false.

(2) The presiding officer is hereby authorised and required to administer any such oath as is required by subregulation (1).

(3) Any person who makes any false statement in any declaration referred to in subregulation (1), knowing the statement to be false, shall be guilty of an offence.

(4) More than one person may be referred to in any declaration on oath made under subregulation (1), provided the reason why each of the persons referred to is unable to attend at a polling station can be clearly connected with the person to whom the declaration relates.

Sealing of ballot boxes, etc.

37. (1) Every presiding officer shall, immediately after the close of the poll, in the presence of such candidates or their agents (if any) as may be in attendance, make up into separate packets, sealed with his own seal and with the seals of those candidates or agents (if any) who desire to affix their seals—

(a) each ballot box entrusted to him, unopened;

(b) the unused and spoiled ballot papers;

(c) the counterfoils of all used ballot papers; and

(d) tendered ballot papers;

and shall forthwith deliver or cause to be delivered the packets to the electoral officer.

(2) The packets shall be accompanied by a return made by the presiding officer, in the form contained in Annexure E hereto, showing the number of ballot papers entrusted to him and accounting for them under the heads of "Ballot papers in the ballot box", "Unused ballot papers", "Spoiled ballot papers" and "Tendered ballot papers".

Aangebode stembriewe

35. Indien iemand wat voorgee dat hy 'n bepaalde kieser is, om 'n stembrief aansoek doen nadat 'n ander persoon in sy naam gestem het, is die aansoeker, nadat hy behoorlik geantwoord het op die vrae wat volgens regulasie 31 tydens die stemming aan kiesers gestel kan word, geregtig om 'n stembrief te merk op dieselfde wyse as enige ander kieser, maar die stembrief word nie in die stembus geplaas nie, maar word aan die voorsittende beampte gegee en deur hom met die naam van die kieser en sy volgnommer geëndosseer en eenkant gesit in 'n afsonderlike pakket.

Omstandighede waaronder voorsittende beampte 'n stembrief kan weier

36. (1) Indien 'n kandidaat of 'n agent van 'n kandidaat of 'n kieser voor die voorsittende beampte 'n beëdigde verklaring aflê dat 'n persoon wat in die kieserslys ingeskryf is, oorlede is of dat bedoelde persoon weens siekte, afwesigheid of om 'n ander rede onmoontlik by die stemburo teenwoordig kan wees om by die verkiesing wat dan gehou word, sy stem uit te bring, weier die voorsittende beampte om 'n stembrief uit te reik aan enigiemand wat daarom aansoek doen in naam van die persoon op wie die verklaring betrekking het, tensy die persoon wat aldus aansoek doen sy identiteit tot tevredenheid van die voorsittende beampte bewys of voor die voorsittende beampte 'n beëdigde verklaring aflê dat hy die persoon is wie se naam op die kieserslys vir die wyk voorkom en dat die bewerings in eersbedoelde verklaring (wat aan hom voorgelees moet word) vals is.

(2) Aan die voorsittende beampte word hierby die bevoegdheid verleen en die verpligting opgelê om 'n in subregulasie (1) bedoelde eed af te neem.

(3) Iemand wat in 'n in subregulasie (1) bedoelde verklaring 'n valse verklaring doen, wetende dat dit vals is, is aan 'n misdryf skuldig.

(4) In 'n beëdigde verklaring ingevolge subregulasie (1) afgelê, kan na meer as een persoon verwys word, mits die rede waarom elkeen van die persone na wie verwys word, nie by die stemburo kan wees nie, duidelik met die persoon op wie die verklaring betrekking het, verbind kan word.

Verseëling van stembusse, ens.

37. (1) Elke stemopnemer maak onmiddellik na die sluiting van die stemming, in teenwoordigheid van sodanige kandidate of hulle agente (as daar is) as wat aanwesig is, afsonderlike pakkette, verseël met sy eie seël en met die seëls van dié kandidate of hulle agente (as daar is) wat hulle seëls ook daarop wil afdruk, van—

(a) elke stembus wat aan hom toevertrou is, onoopgemaak;

(b) die ongebruikte en die bedorwe stembriewe;

(c) die teenblaaie van alle gebruikte stembriewe; en

(d) aangebode stembriewe;

en lewer die pakkette onverwyld aan die verkiesingsbeampte af of laat hulle aan hom aflewer.

(2) Die pakkette gaan vergesel van 'n opgawe in die vorm vervat in Aanhangsel E hiervan deur die voorsittende beampte verstrek waarin hy die getal stembriewe aan hom toevertrou noem en waarin hy van hulle rekenskap gee onder die hoofde "Stembriewe in die stembus", "Ongebruikte stembriewe", "Bedorwe stembriewe" en "Aangebode stembriewe".

University of Pretoria

(3) A label in the form contained in Annexure F hereto shall be affixed to each of the packets mentioned in subregulation (1) and to the return mentioned in subregulation (2).

Action to be taken by the electoral officer upon receipt of ballot papers

38. The electoral officer shall upon receipt of voters' ballot papers retain such ballot papers unopened in safe custody until the counting of votes.

Verification of ballot paper return

39. (1) The electoral officer shall, upon receipt of all the packets and ballot boxes from every presiding officer, and not before, examine whether the seals are in order and afford such candidates or their agents as may be in attendance an opportunity to do the same and after that open the sealed packets containing the ballot paper return and shall open each ballot box and verify the number of ballot papers in the ballot box according to the ballot paper return given by each presiding officer by comparing it with the number of ballot papers in each such ballot box.

(2) When the electoral officer has completed the verification of the ballot papers in the ballot boxes for each polling station, and whether or not the number of ballot papers in the ballot boxes is found to correspond with the number appearing on the return, he shall in the presence of such candidates or their agents as may be present mix together the ballot papers contained in all the ballot boxes for a particular ward so that it is impossible to determine from which ballot box any particular ballot paper was taken.

(3) The electoral officer shall, after scrutinising the official mark on the ballot papers, proceed to count or cause to be counted the votes and while counting the votes shall cause the ballot papers to be kept with their faces upwards.

Manner of counting votes

40. The ballot papers shall, for the purposes of counting, be fastened together in packets of 50 (to each of which a distinctive number shall be assigned) and thereafter the number of votes for each candidate shall be recorded and checked.

Ballot papers to be rejected

41. (1) The electoral officer shall reject and not count any ballot paper—

(a) which does not bear the official mark;

(b) on which votes are cast for more than one candidate;

(c) which is unmarked or invalid owing to uncertainty;

(d) which bears any writing or mark by which a voter can be identified otherwise than in these Regulations prescribed.

(2) Subject to the provisions of subregulation (1), the electoral officer shall not reject any ballot paper on which a voter has clearly indicated, in a manner other than by means of a cross, for which candidate he has voted.

(3) The electoral officer shall endorse the word "rejected" on a ballot paper which he may reject as invalid.

(3) Elkeen van die pakkette in subregulasie (1) genoem en die opgawe in subregulasie (2) genoem, word voorsien van 'n etiket in die vorm vervat in Aanhangsel F hiervan.

Optrede deur verkiesingsbeampte by ontvangs van stembriewe

38. Elke verkiesingsbeampte moet by ontvangs van kiesers se stembriewe sodanige stembriewe onoopgemaak in veilige bewaring hou totdat die stemme getel word.

Verifiëring van stembriefopgawe

39. (1) By ontvangs deur die verkiesingsbeampte van al die pakkette en stembusse van iedere voorsittende beampte, en nie eerder nie, ondersoek hy of die seëls in orde is en gee hy sodanige kandidate of hulle agente as wat aanwesig is 'n geleentheid om dieselfde te doen, en daarna maak hy die verseëlde pakkette oop wat die opgawe van stembriewe bevat, en maak hy elke stembus oop en verifieer hy die getal stembriewe in die stembus ooreenkomstig die stembriefopgawe wat deur elke voorsittende beampte ingelewer is deur dit met die getal stembriewe in elke sodanige stembus te vergelyk.

(2) Wanneer die verkiesingsbeampte die verifiëring van die stembriewe in die stembusse vir elke stemburo uitgevoer het, maak hy, afgesien daarvan of die getal stembriewe in die stembusse klop met die getal wat op die opgawe voorkom al dan nie, in teenwoordigheid van sodanige kandidate of hulle agente as wat aanwesig is, die stembriewe uit al die stembusse vir 'n besondere wyk op so 'n wyse deurmekaar dat dit onmoontlik is om te bepaal uit watter stembus 'n bepaalde stembrief geneem is.

(3) Nadat hy die amptelike merk op die stembriewe nagegaan het, gaan die verkiesingsbeampte oor tot die tel van die stemme en terwyl hy die stemme tel of laat tel, laat hy die stembriewe met hulle voorkant na bo hou.

Wyse waarop stemme getel moet word

40. Vir die doel van die tel van stemme word die stembriewe in pakkette van 50 vasgebind (aan elkeen waarvan 'n onderskeidende nommer toegeken word) en daarna word die getal stemme ten opsigte van elke kandidaat opgeskryf en nagegaan.

Stembriewe wat verwerp moet word

41. (1) Die verkiesingsbeampte verwerp en tel nie 'n stembrief nie—

(a) wat nie die amptelike merk daarop het nie;

(b) waarop stemme op meer as een kandidaat uitgebring is;

(c) wat ongemerk of weens onsekerheid ongeldig is;

(d) wat enige skrif of merk daarop het waardeur 'n kieser op 'n ander wyse as dié in hierdie Regulasies voorgeskryf, geïdentifiseer kan word.

(2) Behoudens die bepalings van subregulasie (1), verwerp die verkiesingsbeampte nie 'n stembrief waarop 'n kieser op 'n ander wyse as by wyse van 'n kruis duidelik aangedui het vir watter kandidaat hy stem nie.

(3) Die verkiesingsbeampte endosseer die woord "verwerp" op 'n stembrief wat hy as ongeldig verwerp.

Objection against acceptance or rejection of a ballot paper

42. (1) If a candidate or an agent objects to the acceptance of any ballot paper, the electoral officer shall endorse the words "objection raised against acceptance" on such ballot paper.

(2) If a candidate or an agent objects to the rejection of any ballot paper, the electoral officer shall endorse the words "objection raised against rejection" on such ballot paper.

Determination of successful candidate in event of equal number of votes

43. In the event of the number of votes being found to be equal for the candidates who obtained the greater or the greatest number of votes, the electoral officer shall by lot determine the successful candidate.

Result of election

44. The electoral officer shall, as soon as possible after determining which candidate has obtained the greater or the greatest number of votes in each ward, in public declare such candidates duly elected and shall make known the number of votes polled by each candidate.

Publication of names of elected members

45. (1) As soon as possible after the names of the candidates duly elected as members of the Community Council are known the electoral officer shall cause to be displayed on the notice board of each township manager's office situated in the area for which the Community Council has been established a list reflecting the full name of every member so elected together with the date on which he was duly elected, the name of the ward which such member represents and the total number of votes cast in favour of such member.

(2) A notice displayed in terms of subregulation (1) shall also reflect the names of the unsuccessful candidates in respect of each ward and the total number of votes cast in favour of each such candidate, as well as the number of rejected ballot papers in respect of each ward.

Disposal of electoral matter by electoral officer after the counting of votes has been completed

46. (1) The electoral officer shall after the completion of the counting of votes make up into separate packets the following:

(a) All unused, tendered and spoiled ballot papers used at each polling station;

(b) all counted ballot papers in respect of each ward;

(c) all rejected ballot papers in respect of each ward; and

(d) all ballot paper returns duly endorsed with his findings on the verification of such returns.

(2) The electoral officer shall—

(a) affix a label in the form contained in Annexure F hereto to each of the packets mentioned in subregulation (1);

(b) seal each such packet with his own seal and with the seals of such candidates and agents (if any) as may desire to affix their seals; and

(c) retain such packets for a period of six months and thereafter destroy them.

Beswaar teen aanname of verwerping van stembrief

42. (1) Indien 'n kandidaat of 'n agent beswaar maak teen die aanname van 'n stembrief, endosseer die verkiesingsbeampte die woorde "beswaar geopper teen aanname" op sodanige stembrief.

(2) Indien 'n kandidaat of 'n agent beswaar maak teen die verwerping van 'n stembrief, endosseer die verkiesingsbeampte die woorde "beswaar geopper teen verwerping" op sodanige stembiref.

Bepaling van suksesvolle kandidaat in geval van staking van stemme

43. Ingeval daar bevind word dat ewe veel stemme uitgebring is op die kandidate wat die grootste getal stemme verkry het, bepaal die verkiesingsbeampte die suksesvolle kandidaat deur loting.

Uitslag van verkiesing

44. Die verkiesingsbeampte verklaar in die openbaar, so gou moontlik nadat hy bepaal het watter kandidaat die grootste getal stemme in elke wyk verkry het, sodanige kandidate behoorlik verkose en maak die getal stemme bekend wat op elke kandidaat uitgebring is.

Bekendmaking van name van verkose lede

45. (1) Sodra die name van die kandidate wat behoorlik as lede van die Gemeenskapsraad verkies is, bekend is, laat die verkiesingsbeampte 'n lys bevattende die volle naam van elke kandidaat aldus verkies tesame met die datum waarop hy behoorlik verkies is, die naam van die wyk wat sodanige lid verteenwoordig en die totale getal stemme wat ten gunste van sodanige lid uitgebring is, op die aanplakbord van elke dorpsbestuurder se kantoor wat in sodanige gebied geleë is, vertoon.

(2) 'n Kennisgewing ingevolge subregulasie (1) vertoon, dui ook die name van die onsuksesvolle kandidate ten opsigte van elke wyk en die totale getal stemme aan wat ten opsigte van elke sodanige kandidaat uitgebring is, asook die getal bedorwe stembriewe ten opsigte van elke wyk.

Beskikking oor verkiesingstukke deur verkiesingsbeampte na afloop van tel van stemme

46. (1) Na afloop van die tel van die stemme maak die verkiesingsbeampte die volgende in afsonderlike pakkette op:

(a) Alle ongebruikte, aangebode en bedorwe stembriewe wat by elke stemburo gebruik is;

(b) alle getelde stembriewe met betrekking tot elke wyk;

(c) alle verworpe stembriewe met betrekking tot elke wyk; en

(d) alle stembriefopgawes behoorlik geëndosseer met sy bevindings betreffende die verifiëring van sodanige opgawes.

(2) Die verkiesingsbeampte—

(a) voorsien elke pakket genoem in subregulasie (1) van 'n etiket in die vorm vervat in Aanhangsel F hiervan;

(b) verseël elke sodanige pakket met sy eie seël en met die seëls van sodanige kandidate en agente (as daar is) as wat hulle seëls ook daarop wil afdruk; en

(c) bewaar sodanige pakkette vir 'n tydperk van ses maande en vernietig hulle daarna.

Immaterial mistakes not to affect validity of election

47. No election shall be invalid by reason of any mistake or non-compliance with the provisions of these Regulations if the election was conducted in accordance with the principles laid down herein and such mistake or non-compliance did not affect the result.

Evidence of election being held

48. Upon any charge of a corrupt or illegal practice or any other offence under these Regulations alleged to have been committed at or in connection with an election, the certificate of the electoral officer that the election mentioned therein was being or had been held shall be sufficient evidence of the fact that such election was being or had been held.

Sundays and public holidays

49. Whenever under these Regulations anything is required to be commenced, concluded or done on a particular date, and that date happens to fall upon a Sunday or a day declared by or under any law to be a public holiday, such thing shall be commenced, concluded or done on the date next succeeding such Sunday or public holiday or if the last-mentioned date is also a Sunday or public holiday, then on the date next succeeding such Sunday or public holiday.

Interrupting or disturbing proceedings at elections

50. Any person who wilfully interrupts, obstructs or disturbs any proceedings in connection with the conduct of elections in terms of the provisions of these Regulations or who on polling day uses any form of loudspeaker or forms or organises any procession of or demonstration by persons other than for official purposes, shall be guilty of an offence.

Fraud in connection with ballot papers, etc.

51. (1) Any person who—

(a) forges or counterfeits or fraudulently destroys any ballot paper or the official mark on any ballot paper;

(b) without due authority supplies a ballot paper to any person;

(c) fraudulently puts into any ballot box any paper other than the ballot paper which he is authorised by law to put in;

(d) fraudulently takes out of the polling station any ballot paper; or

(e) without due authority destroys, takes, opens or otherwise interferes with any ballot box or packet of ballot papers then in use for the purpose of the election;

shall be guilty of an offence.

(2) In any indictment, summons or charge for an offence in relation to ballot boxes, ballot papers and official marking instruments at an election, the property in such boxes, papers and instruments as well as the property in the counterfoils, may be stated to be in the electoral officer.

(3) If the electoral officer is so indicated or charged such property may be stated to be in the Community Council.

Infringement of secrecy

52. (1) Every officer, candidate or his agent in attendance at a polling station or at the counting of votes, shall maintain, and aid in maintaining, the

Onbelangrike fouts raak nie geldigheid van verkiesing nie

47. Geen verkiesing is weens 'n fout of nie-nakoming van die bepalings van hierdie Regulasies ongeldig nie indien die verkiesing gehou is ooreenkomstig die beginsels hierin voorgeskryf en sodanige fout of nie-nakoming nie die uitslag geraak het nie.

Bewys dat verkiesing gehou is

48. By 'n aanklag van 'n korrupte of onwettige bedrywigheid of van 'n ander misdryf ingevolge hierdie Regulasies, wat volgens bewering by of in verband met 'n verkiesing begaan is, is die sertifikaat van die verkiesingsbeampte dat die verkiesing daarin gemeld aan die gang was of gehou is, voldoende bewys van die feit dat sodanige verkiesing aan die gang was of gehou is.

Sondae en openbare feesdae

49. Wanneer enigiets op 'n bepaalde datum ingevolge hierdie Regulasies begin, voltooi of gedoen moet word, en daardie datum op 'n Sondag val of op 'n dag wat by of kragtens 'n wet tot 'n openbare feesdag verklaar is, moet dit begin, voltooi of gedoen word op die eersvolgende datum na sodanige Sondag of openbare feesdag, of as laasgenoemde datum ook op 'n Sondag of openbare feesdag val, dan op die eersvolgende datum na sodanige Sondag of openbare feesdag.

Onderbreking of steuring van verrigtings by verkiesings

50. 'n Persoon wat opsetlik verrigtings in verband met die hou van verkiesings ooreenkomstig die bepalings van hierdie Regulasies onderbreek, belemmer of versteur, of op stemdag enige vorm van luidspreker gebruik of enige optog van, of betoging deur, persone vorm of reël, uitgesonderd vir amptelike doeleindes, begaan 'n misdryf.

Bedrog met stembriewe, ens.

51. (1) 'n Persoon wat—

(a) 'n stembrief of die amptelike merk op 'n stembrief vervals, namaak of met opset om te bedrieg vernietig;

(b) sonder behoorlike magtiging 'n ander persoon van 'n stembrief voorsien;

(c) met opset om te bedrieg, enige ander stuk papier in 'n stembus plaas as die stembrief wat hy regtens daarin mag plaas;

(d) met opset om te bedrieg, 'n stembrief uit die stemburo wegneem; of

(e) sonder behoorlike magtiging 'n stembus of pakket stembriewe wat dan vir die doel van die verkiesing in gebruik is, vernietig, neem, oopmaak of hom op 'n ander wyse daarmee bemoei;

begaan 'n misdryf.

(2) In 'n akte van beskuldiging, dagvaarding of aanklag weens 'n misdryf met betrekking tot stembusse, stembriewe en amptelike merkinstrumente by 'n verkiesing kan verklaar word dat die eiendomsreg op die busse, stembriewe en instrumente, asook op die teenblaaie, by die verkiesingsbeampte by die verkiesing berus.

(3) Word die verkiesingsbeampte aldus beskuldig of aangekla, kan verklaar word dat die eiendomsreg by die Gemeenskapsraad berus.

Skending van geheimhouding

52. (1) Iedere beampte, kandidaat of sy agent wat by 'n stemburo of by die tel van stemme aanwesig is, moet die geheimhouding van die stemming in daardie

secrecy of the voting in that station and shall not communicate, except for some purpose authorised by law, to any person any information likely to defeat the secrecy of the voting.

(2) No person, except as in these Regulations provided shall interfere with or attempt to interfere with a voter when such voter is marking his ballot paper, or otherwise attempt to obtain information as to the candidate for whom any voter is about to vote or has voted, or communicate at any time to any person any information obtained as to the candidate for whom any voter is about to vote or has voted at a taking of poll under these Regulations.

(3) No person shall directly or indirectly induce any voter to display his ballot paper, after he has marked the same, in such a manner as to make known to any person the name of the candidate for whom the voter has so marked his ballot paper.

(4) No person shall place upon any ballot paper any mark or writing whereby a person who casts his vote on that ballot paper may be identified.

(5) Every person in attendance at the counting of votes shall maintain, and aid in maintaining, the secrecy of the voting, and shall not attempt to ascertain or communicate any information obtained at such counting as to the candidate for whom any vote is cast in any particular ballot paper.

(6) A person who has, in carrying out his duties under these Regulations, obtained knowledge as to the candidate for whom any other person has voted shall not, except in answer to a question lawfully put to him in the course of proceedings in a competent court, disclose such knowledge.

(7) Any person who contravenes or fails to comply with any provision of this regulation shall be guilty of an offence.

Failure by electoral officer or other officer to perform his duties

53. If the electoral officer or any other officer or person wilfully fails to perform any of the duties which he is required to perform under the provisions of these Regulations, he shall be guilty of an offence.

Treating

54. Any person who corruptly by himself or by any other person either before, during or after an election, directly or indirectly gives or provides, or pays wholly or in part the expense of giving or providing, any food, drink, entertainment, lodging or provisions to or for any person for the purpose of corruptly influencing that person or any other person to cast or refrain from casting his vote at an election, or on account of such person or any other person having voted or refrained from voting, or being about to vote or refrain from voting at such election, shall be guilty of the offence of treating.

Undue influence

55. (1) Any person who directly or indirectly by himself or by any other person makes use or threatens to make use of any force, violence or restraint or inflicts or threatens to inflict any temporal or spiritual injury, damage, harm or loss upon or against, or does or threatens to do anything to the disadvantage of any person in order to induce or compel that person to

buro handhaaf en help om dit te handhaaf en mag aan geen persoon, uitgesonderd vir die een of ander regtens geoorloofde doel, enige inligting meedeel wat waarskynlik die geheimhouding van die stemming sal verydel nie.

(2) Behoudens die bepalings van hierdie Regulasies, mag geen persoon hom met 'n kieser bemoei, of probeer om hom met 'n kieser te bemoei wanneer sodanige kieser sy stembrief merk nie, of andersins by 'n stemming kragtens hierdie Regulasies probeer om te wete te kom vir watter kandidaat 'n kieser op die punt staan om te stem of gestem het nie of te eniger tyd aan enige persoon meedeel vir watter kandidaat, volgens inligting wat verkry is, 'n kieser op die punt staan om te stem of gestem het nie.

(3) Geen persoon mag direk of indirek enige kieser beweeg om sy stembrief, nadat hy dit gemerk het, op so 'n wyse te vertoon dat enige persoon die naam van die kandidaat vir wie hy sy stembrief aldus gemerk het, te wete kom nie

(4) Geen persoon mag op 'n stembrief enige merk of skrif aanbring waardeur 'n persoon wat met daardie stembrief stem, geïdentifiseer kan word nie.

(5) Iedere persoon wat by die tel van die stemme aanwesig is, moet die geheimhouding van die stemming handhaaf en help om dit te handhaaf, en mag nie probeer vasstel of aan 'n ander persoon meedeel vir watter kandidaat, volgens inligting wat by sodanige telling verkry is, op 'n bepaalde stembrief 'n stem uitgebring is nie.

(6) 'n Persoon wat by die vervulling van sy pligte kragtens hierdie Regulasies te wete gekom het op watter kandidaat enige ander persoon sy stem uitgebring het, mag sodanige kennis nie bekendmaak nie, uitgesonderd in antwoord op 'n vraag wat wettiglik aan hom gestel is in die loop van verrigtings in 'n bevoegde hof.

(7) 'n Persoon wat enige van die bepalings van hierdie regulasie oortree of versuim om daaraan te voldoen, begaan 'n misdryf.

Versuim deur verkiesingsbeampte of ander beampte om sy pligte te vervul

53. Indien die verkiesingsbeampte of enige ander beampte of persoon opsetlik versuim om enige van die pligte te vervul wat kragtens die bepalings van hierdie Regulasies hom opgelê is, begaan hy 'n misdryf.

Trakteerdery

54. 'n Persoon wat korruptelik, hetsy voor, gedurende of na 'n verkiesing, self of deur 'n ander persoon direk of indirek aan of vir enige persoon voedsel, drank, vermaak, inwoning of lewensmiddele gee of verskaf of die koste om dit te gee of te verskaf, of 'n deel daarvan, betaal, met die doel om daardie persoon of 'n ander persoon korruptelik te beïnvloed om sy stem by die verkiesing uit te bring al dan nie, of omdat daardie persoon of 'n ander persoon sy stem by die verkiesing uitgebring het of gaan uitbring al dan nie, begaan die misdryf van trakteerdery.

Onbehoorlike beïnvloeding

55. (1) 'n Persoon wat, self of deur 'n ander persoon, direk of indirek teen enige persoon geweld of dwang gebruik of dreig om te gebruik, of aan enige persoon enige wêreldlike of geestelike leed, skade, kwaad of verlies berokken of dreig om dit te berokken of iets ten nadele van enige persoon doen of dreig om dit te doen, ten einde daardie persoon te beweeg of te dwing

vote or refrain from voting, or on account of that person having voted or refrained from voting at any election, shall be guilty of the offence of undue influence.

(2) Any person who, by abduction, duress or fraudulent device or contrivance, impedes or prevents the free exercise of the franchise by any voter, or thereby compels, induces or prevails upon any voter either to cast or to refrain from casting his vote at any election, shall be guilty of the offence of undue influence.

Bribery

56. (1) Any person shall be guilty of the offence of bribery if he, directly or indirectly, by himself or by any other person—

(a) gives, lends or procures, or agrees to give, lend or procure, or offers, promises, or promises to procure or to endeavour to procure any money or any other thing, to or for any voter, or to or for any person on behalf of any voter, or to or for any other person, in order to induce any voter to vote or refrain from voting, or corruptly does any such act as aforesaid on account of such voter having voted or refrained from voting at any election;

(b) gives, lends or agrees to give or lend, or offers, or promises to procure or to endeavour to procure any money or any other thing to or for any voter, or to or for any person on behalf of any voter, or to or for any other person, for acting or joining in any procession or demonstration before, during or after any election;

(c) makes any such gift, loan, offer, promise, procurement or agreement to or for any person in order to induce such person to procure or endeavour to procure, the return of any candidate at any election or the vote of any voter at an election;

(d) upon or in consequence of any such gift, loan, offer, promise, procurement or agreement, procures, or engages, promises or endeavours to procure, the return of any candidate at any election or the vote of any voter at any election;

(e) advances or pays, or causes to be advanced or paid, any money, to, or for the use of, any other person with the intent that such money, or any part thereof, shall be expended in bribery at any election, or knowingly pays, or causes to be paid, any money to any person in discharge or repayment of any money wholly or in part expended in bribery at any election;

(f) before or during any election, receives or contracts for any money or loan, for himself or for any other person, for voting or agreeing to vote, or for refraining or agreeing to refrain from voting, at any election;

(g) after an election receives any money on account of any person having voted or refrained from voting or having induced any other person to vote or refrain from voting at any election; or

(h) conveys or transfers or is concerned with the conveyance or transfer of any property, or pays or is concerned with the payment of any money, to any person for the purpose of enabling him to vote, thereby to influence his vote at any future election, or pays or is concerned with the payment of any money on behalf of any voter for the purpose of inducing him to vote or refrain from voting.

om sy stem by 'n verkiesing uit te bring al dan nie, of omdat hy sy stem by 'n verkiesing uitgebring het al dan nie, begaan die misdryf van onbehoorlike beïnvloeding.

(2) 'n Persoon wat deur ontvoering, dwang of enige bedrieglike middel die vrye uitoefening van die stemreg deur 'n kieser belemmer of belet of 'n kieser daardeur dwing, beweeg of oorhaal om sy stem by 'n verkiesing uit te bring al dan nie, begaan die misdryf van onbehoorlike beïnvloeding.

Omkopery

56. (1) 'n Persoon begaan die misdryf van omkopery indien hy, self of deur 'n ander, direk of indirek—

(a) aan of vir 'n kieser, of aan of vir 'n persoon ten behoewe van 'n kieser, of aan of vir enige ander persoon, enige geld of enigiets anders gee, leen of verkry of ooreenkom om dit te gee, te leen of te verkry of dit aanbied, beloof of beloof om dit te verkry of om te probeer om te verkry, ten einde 'n kieser te beweeg om sy stem by 'n verkiesing uit te bring al dan nie, of korruptelik een van voormelde handelinge verrig omdat die kieser sy stem by 'n verkiesing uitgebring het al dan nie;

(b) aan of vir 'n kieser, of aan of vir 'n persoon ten behoewe van 'n kieser, of aan of vir enige ander persoon, enige geld of enigiets anders gee of leen, of ooreenkom om dit te gee of te leen, of dit aanbied, of beloof om dit te verkry of om te probeer om dit te verkry, vir optrede in of deelname aan enige optog of betoging voor, gedurende of na 'n verkiesing;

(c) aan of vir 'n persoon sodanige skenking, lening, aanbod, belofte, verkryging of ooreenkoms gee, verstrek, doen of aangaan ten einde sodanige persoon te beweeg om die verkiesing van 'n kandidaat by 'n verkiesing of die stem van 'n kieser by 'n verkiesing te verkry of om te probeer om dit te verkry;

(d) teen of ten gevolge van sodanige skenking, lening, aanbod, belofte, verkryging of ooreenkoms, die verkiesing van 'n kandidaat by 'n verkiesing of die stem van 'n kieser by 'n verkiesing verkry of onderneem, beloof of probeer om dit te verkry;

(e) aan of vir die gebruik van 'n ander persoon enige geld voorskiet of betaal of laat voorskiet of betaal, met die bedoeling dat daardie geld of enige deel daarvan by 'n verkiesing aan omkopery bestee moet word, of willens en wetens aan 'n persoon enige geld betaal of laat betaal ter vereffening of terugbetaling van geld wat geheel of ten dele by 'n verkiesing aan omkopery bestee is;

(f) voor of gedurende enige verkiesing, vir homself of 'n ander persoon, enige geld of lening ontvang of beding, omdat hy by 'n verkiesing gestem het of ooreengekom het om te stem, of omdat hy hom by 'n verkiesing van stemming onthou het of ooreengekom het om hom van stemming te onthou;

(g) na 'n verkiesing geld ontvang omdat 'n persoon sy stem uitgebring het al dan nie of 'n ander persoon beweeg het om sy stem by enige verkiesing uit te bring al dan nie; of

(h) eiendom oordra of transporteer of betrokke is by die oordrag of transport van eiendom, of enige geld betaal of betrokke is by die betaal van enige geld aan 'n persoon ten einde hom in staat te stel om te stem en daardeur sy stem by 'n toekomstige verkiesing te beïnvloed, of enige geld betaal of betrokke is by die betaling van enige geld ten behoewe van 'n kieser ten einde hom te beweeg om sy stem uit te bring al dan nie.

University of Fort Hare

(2) Nothing in this regulation contained shall be construed as applying to any money paid or agreed to be paid for or on account of any electoral expenditure bona fide and lawfully incurred.

Personation

57. Any person who—

(a) at any election applies for a ballot paper in the name of some other person, whether living, dead or fictitious; or

(b) having voted once at any election, applies again at any polling station at the same election for a ballot paper;

shall be guilty of the offence of personation.

Corrupt procurement of candidature or withdrawal thereof

58. Any person who—

(a) corruptly induces or procures any other person to become a candidate or to withdraw as a candidate at any election in consideration of any payment or promise of any nature;

(b) becomes a candidate or withdraws as a candidate at any election in pursuance of such inducement or procurement; or

(c) before or during an election publishes a false statement of the withdrawal of a candidate at an election for the purpose of promoting or procuring the election of another candidate, knowing that statement to be false;

shall be guilty of an offence.

Bills, placards, etc., to bear publisher's name

59. (1) Every bill, placard, poster, pamphlet, circular or other printed matter having reference to an election shall clearly bear the name and address of the printer and publisher thereof.

(2) No person shall print, publish or post up or cause to be printed, published or posted up, any such printed matter which fails to bear clearly the name and address of the printer and publisher.

(3) The proprietor and publisher of every newspaper shall cause the word "advertisement" to be printed as a headline to each article or paragraph in his newspaper containing electoral matter, the insertion of which is or is to be paid for or for which any reward or compensation or promise of reward or compensation is or is to be made.

(4) The words "electoral matter" used in subregulation (3) include all matters which on the face of it are intended or calculated to affect the result of an election, and any report of the speech of a candidate if the insertion of the report is or is to be paid for.

(5) Every report, letter, article, bill, placard, poster, pamphlet, circular, cartoon or other printed matter (hereinafter in this subregulation called a newspaper article) which, on the face of it, is intended or calculated to effect the result of an election, and is inserted in any newspaper or otherwise produced and is published on or after the date of commencement of such election of members to the Community Council, shall bear at the foot thereof the full name and address of the person by whom such newspaper article was written or produced: Provided that—

(a) any newspaper article which is inserted in any newspaper as aforesaid and which has been altered materially by the editor of such newspaper, may also be signed by such editor;

(2) Geen bepaling van hierdie regulasie mag uitgelê word nie as sou dit van toepassing wees op geld wat vir of weens bona fide- en wettig aangegane verkiesingskoste betaal is of volgens ooreenkoms betaal moet word.

Uitgee vir 'n ander

57. 'n Persoon wat—

(a) by enige verkiesing in die naam van 'n ander persoon, hetsy lewend of afgestorwe, of van 'n denkbeeldige persoon, om 'n stembrief aansoek doen; of

(b) nadat hy een maal by 'n verkiesing gestem het, weer by 'n stemburo by dieselfde verkiesing om 'n stembrief aansoek doen;

begaan die misdryf van hom vir 'n ander uit te gee.

Korrupte verkryging van kandidatuur of terugtrekking daarvan

58. 'n Persoon wat—

(a) 'n ander persoon korruptelik beweeg of oorhaal om, as teenprestasie vir 'n betaling of belofte van watter aard ook al, 'n kandidaat by enige verkiesing te word of as sodanig terug te trek;

(b) as gevolg daarvan dat hy aldus beweeg of oorgehaal is, 'n kandidaat by enige verkiesing word of as sodanig terugtrek; of

(c) voor of gedurende 'n verkiesing, met die doel om die verkiesing van 'n ander kandidaat te bevorder of te bewerkstellig, 'n valse verklaring dat 'n kandidaat by 'n verkiesing teruggetrek het, publiseer wetende dat die verklaring vals is;

begaan 'n misdryf.

Biljette, plakkate, ens., moet naam van uitgewer dra

59. (1) Alle biljette, plakkate, aanplakbiljette, pamflette, omsendbriewe of ander drukwerk wat op 'n verkiesing betrekking het, moet die naam en adres van die drukker en uitgewer daarvan duidelik dra.

(2) Geen persoon mag sodanige drukwerk wat nie die naam en adres van die drukker en uitgewer dra nie, druk, uitgee of aanplak of laat druk, uitgee of aanplak nie.

(3) Die eienaar en uitgewer van iedere nuusblad moet die woord "advertensie" as 'n opskrif laat druk by elke artikel of paragraaf in sy nuusblad wat verkiesingstof bevat, vir die opneming waarvan betaal is of gaan word of waarvoor 'n beloning of vergoeding of 'n belofte van beloning of vergoeding gegee is of gaan word.

(4) Die woord "verkiesingstof" in subregulasie (3) gebesig, omvat alles wat, na die skyn geoordeel, bedoel of daarop bereken is om die uitslag van 'n verkiesing te beïnvloed, asook enige verslag van 'n toespraak van 'n kandidaat, indien vir die opneming van die verslag betaal word of gaan word.

(5) Alle verslae, briewe, artikels, biljette, plakkate, aanplakbiljette, pamflette, omsendbriewe, spotprente of ander drukwerk (hieronder in hierdie subregulasie nuusbladartikels genoem) wat, na die skyn geoordeel, bedoel of daarop bereken is om die uitslag van 'n verkiesing te beïnvloed, en in 'n nuusblad opgeneem of op 'n ander wyse geproduseer word en op of na die datum van die begin van die verkiesing van lede van die Gemeenskapsraad gepubliseer word, moet onderaan die volle naam en adres dra van die persoon deur wie die nuusbladartikel geskryf of geproduseer is: Met dien verstande dat—

(a) enige sodanige nuusbladartikel wat soos voormeld in 'n nuusblad opgeneem word en wat wesenlik deur die redakteur van die nuusblad verander is, ook deur sodanige redakteur onderteken kan word;

University of Fort Hare
Together in Excellence

(b) in the case of a report of a public meeting which is written jointly by two or more persons, it shall be sufficient for the purposes of this subregulation if the report as a whole bears upon the face of it the full names and addresses of the persons by whom it was written; and

(c) in the case of headlines to any newspaper article which is inserted in any newspaper as aforesaid, and bills, placards or posters having reference thereto, which are issued in the ordinary practice of a newspaper, it shall be sufficient for the purposes of this subregulation if the full names and addresses of the persons by whom such headlines, bills, placards or posters were written, and a statement that such headlines, bills, placards or posters were written by such persons, are published in the issue of the newspaper in which such newspaper article is inserted.

(6) Subject to the provisions of proviso (c) to subregulation (5), no person shall print or publish any newspaper or other printed matter in which is inserted or produced any such newspaper article, which fails to bear upon the face thereof the full name and address of the person by whom it was written or produced.

(7) For the purposes of this regulation an election shall be deemed to commence on the date of first publication of the notice referred to in regulation 19.

(8) Any person who contravenes or fails to comply with any provision of this regulation shall be guilty of an offence.

Meetings on premises where sale of liquor usually takes place

60. (1) No person shall hire or use—

(a) any premises on which the sale, by wholesale or retail, of any intoxicating liquor is authorised (whether the authorisation be for consumption of liquor on or off the premises); or

(b) any premises where any intoxicating liquor is sold or is supplied to members of a club, society or association;

or any part of any such premises, as a committee room or for any meeting of voters for the purpose of promoting or procuring the election of a candidate at an election or in connection with arrangements made by any person or party in reference to an election.

(2) No person shall let or make available for use any such premises or part thereof, knowing that it is intended to be so used.

(3) Any agreement entered into in contravention of subregulation (1) or (2) shall be null and void.

(4) Any person who contravenes or fails to comply with any provision of this regulation shall be guilty of an offence.

Consequences to the candidates

61. If upon trial it is proved that any corrupt practice or illegal practice has been committed in reference to the election of a member to the Community Council by or with the knowledge and consent or approval of any candidate at that election, the election of that candidate shall be void and a casual vacancy shall exist.

(b) in die geval van 'n verslag van 'n openbare vergadering wat deur twee of meer persone gesamentlik geskryf is, dit voldoende vir doeleindes van hierdie subregulasie is as die verslag in sy geheel op die voorkant daarvan die volle name en adresse dra van die persone deur wie dit geskryf is; en

(c) in die geval van opskrifte by 'n nuusbladartikel wat soos voormeld in enige nuusblad opgeneem is, en van biljette, plakkate of aanplakbiljette wat daarop betrekking het en wat volgens die gewone gebruik van 'n nuusblad uitgegee word, dit voldoende vir doeleindes van hierdie subregulasie is as die volle name en adresse van die persone deur wie sodanige opskrifte, biljette, plakkate of aanplakbiljette geskryf is, met 'n verklaring dat sodanige opskrifte, biljette, plakkate of aanplakbiljette deur daardie persone geskryf is, gepubliseer word in die uitgawe van die nuusblad waarin sodanige nuusbladartikel opgeneem word.

(6) Behoudens die bepalings van voorbehoudsbepaling (c) van subregulasie (5), mag geen persoon enige nuusblad of ander drukwerk waarin enige sodanige nuusbladartikel opgeneem of geproduseer is, wat nie op die voorkant daarvan die volle naam en adres dra van die persoon deur wie dit geskryf of geproduseer is nie, druk of publiseer nie.

(7) Vir doeleindes van hierdie regulasie word 'n verkiesing geag te begin op die datum van eerste afkondiging van die kennisgewing in regulasie 19 bedoel.

(8) 'n Persoon wat enige van die bepalings van hierdie regulasie oortree of versuim om daaraan te voldoen, begaan 'n misdryf.

Vergaderings op persele waar gewoonlik drank verkoop word

60. (1) Geen persoon mag—

(a) 'n perseel waarop die verkoop van bedwelmende drank, by wyse van groothandel of kleinhandel, deur 'n magtiging gemagtig is (ongeag of dit 'n magtiging is vir verbruik van drank op die perseel of daarbuite); of

(b) 'n perseel waar bedwelmende drank verkoop of verskaf word aan lede van 'n klub, genootskap of vereniging;

of 'n gedeelte van enige sodanige perseel, as 'n komiteekamer of vir 'n vergadering van kiesers ter bevordering of bewerkstelliging van die verkiesing van 'n kandidaat by 'n verkiesing of in verband met reëlings wat deur 'n persoon of party met betrekking tot 'n verkiesing getref is, huur of gebruik nie.

(2) Geen persoon mag sodanige perseel of 'n gedeelte daarvan verhuur of vir gebruik beskikbaar stel nie, wetende dat dit die bedoeling is om dit aldus te gebruik.

(3) Enige ooreenkoms wat strydig met subregulasie (1) of (2) gesluit is, is van nul en gener waarde.

(4) 'n Persoon wat enige van die bepalings van hierdie regulasie oortree of versuim om daaraan te voldoen, begaan 'n misdryf.

Gevolge vir kandidaat

61. As daar by 'n verhoor bewys word dat 'n korrupte bedrywigheid of 'n onwettige bedrywigheid in verband met die verkiesing van 'n lid van die Gemeenskapsraad deur of met die kennis en instemming of goedkeuring van enige kandidaat by daardie verkiesing begaan is, is die verkiesing van daardie kandidaat nietig en bestaan daar 'n toevallige vakature.

University of Fort Hare
Together in Excellence

Vacating of seats by members of the Community Council

62. The seat of a member of the Community Council shall become vacant—

(a) upon the death of such member;

(b) upon receipt by the Secretary of the Community Council of a notice of resignation under the hand of such member;

(c) should such member fail to attend three consecutive general meetings of the Community Council without its special leave;

(d) should such member withdraw from any meeting of the Community Council without the permission of the Chairman;

(e) in the event of such member becoming subject to any of the disqualifications mentioned in regulation 12.

Filling of casual vacancies

63. Should the seat of a member become vacant in terms of regulation 61 or 62 or should the Minister under section 3 (2) of the Act determine that a vacancy exist, the vacancy shall, unless the term of the Community Council expires before such vacancy can be filled, be filled within six months of its occurring, by an election which shall be held in accordance with the provisions of these Regulations.

Ontruiming van setels deur lede van die Gemeenskapsraad

62. Die setel van 'n lid van die Gemeenskapsraad raak vakant—

(a) by die afsterwe van sodanige lid;

(b) by ontvangs deur die Sekretaris van die Gemeenskapsraad van 'n kennisgewing van bedanking onder die handtekening van sodanige lid;

(c) indien sodanige lid versuim om drie opeenvolgende algemene vergaderings van die Gemeenskapsraad by te woon sonder die spesiale toestemming daarvan;

(d) indien sodanige lid hom onttrek aan enige vergadering van die Gemeenskapsraad sonder die toestemming van die Voorsitter;

(e) indien sodanige lid onderhewig raak aan enige van die diskwalifikasies in regulasie 12 genoem.

Vulling van toevallige vakatures

63. Indien die setel van 'n lid ingevolge regulasie 61 of 62 vakant raak of indien die Minister kragtens artikel 3 (2) van die Wet bepaal dat 'n vakature bestaan, moet die vakature, tensy die termyn van die Gemeenskapsraad verstryk voordat sodanige vakature gevul kan word, binne ses maande nadat dit ontstaan het, gevul word deur 'n verkiesing wat ooreenkomstig die bepalings van hierdie Regulasies gehou word.

CHAPTER 6

THE CONVENING OF, THE PROCEDURE AT AND THE CONDUCT OF MEETINGS OF THE COMMUNITY COUNCIL AND COMMITTEES

First general meeting of Community Council

64. The first general meeting of the Community Council shall be convened by the Chief Director on a date, which date shall be within 60 days after the first general election, and at a time and in the manner decided upon by him.

Election of Chairman

65. Immediately after all the members present at the first general meeting of the Community Council and thereafter at the general meeting held in October of each year, have taken their seats the Council shall proceed to the election of the Chairman from the ranks of members of the Council in the manner prescribed in regulation 66.

Manner of election of Chairman

66. (1) A member having first ascertained that the person whom he wishes to propose as Chairman and who is then present, is willing to serve if elected, may propose such person as Chairman and such proposal shall lapse if not seconded.

(2) There shall be no limit to the number of candidates who may be proposed and seconded under subregulation (1), but no member who has already proposed or seconded a candidate shall propose or second any other candidate and no member shall propose or second his own candidature.

(3) The names of the persons duly nominated shall be announced by the person presiding at the relevant meeting of the Community Council (hereinafter in this regulation referred to as the presiding officer) and no debate shall be allowed at the election.

HOOFSTUK 6

DIE BYEENROEPING VAN, DIE PROSEDURE OP EN DIE HOU VAN VERGADERINGS VAN DIE GEMEENSKAPSRAAD EN KOMITEES

Eerste algemene vergadering van Gemeenskapsraad

64. Die Hoofdirekteur roep die eerste algemene vergadering van die Gemeenskapsraad byeen op 'n datum, wat binne 60 dae na die eerste algemene verkiesing moet wees, en op 'n tyd en wyse soos deur hom bepaal.

Verkiesing van Voorsitter

65. Onmiddellik nadat al die lede wat op die eerste algemene vergadering van die Gemeenskapsraad en daarna op die algemene vergadering gehou in Oktober van elke jaar, hul sitplekke ingeneem het, gaan die Gemeenskapsraad oor tot die verkiesing van die Voorsitter uit die geledere van die lede van die Gemeenskapsraad op die wyse in regulasie 66 voorgeskryf.

Wyse waarop Voorsitter verkies word

66. (1) 'n Lid wat vooraf vasgestel het dat die persoon wat hy as Voorsitter wil voorstel en wat dan teenwoordig is, gewillig is om te dien as hy verkies word, kan sodanige persoon as Voorsitter voorstel en indien sodanige voorstel nie gesekondeer word nie, verval dit.

(2) Daar is geen beperking op die getal kandidate wat kragtens subregulasie (1) voorgestel en gesekondeer kan word nie, maar geen lid wat reeds 'n kandidaat voorgestel of gesekondeer het, mag 'n ander kandidaat voorstel of sekondeer nie en geen lid mag sy eie kandidatuur voorstel of sekondeer nie.

(3) Die name van die behoorlik genomineerde persone moet deur die persoon wat by die betrokke vergadering van die Gemeenskapsraad voorsit (hierna in hierdie regulasie die voorsittende beampte genoem) aangekondig word op die sitting waartydens die verkiesing moet plaasvind, en geen debat word by die verkiesing toegelaat nie.

University of Fort Hare

(4) If more than one member be proposed as Chairman, a secret ballot shall be held at which—

(a) the presiding officer shall hand each member present a ballot paper with the names of all the candidates thereon and with an official mark on the reverse side thereof;

(b) every member shall signify the candidate for whom he desires to vote by placing a cross opposite the name of such candidate;

(c) the presiding officer shall call the names of all the members and each member shall, when his name is called, drop his ballot paper into a ballot box;

(d) when all members who wish to vote have done so the presiding officer shall, in the presence of the Community Council, examine the ballot papers with the assistance of such members as the Community Council may decide upon and declare the result of the ballot.

(5) The successful candidate shall be the candidate who obtains the greater or the greatest number of votes cast.

(6) In the event of the number of votes being found to be equal for the candidates who obtained the greater or the greatest number of votes, the presiding officer shall by lot determine the successful candidate.

(7) A member who arrives after the names of the members have been called shall not be entitled to vote.

(8) If only one member is proposed and seconded as Chairman he shall be declared elected.

Manner of election of Deputy Chairman

67. Immediately after the Chairman has been elected, the Community Council shall proceed to the election of a Deputy Chairman and the provisions of regulation 66 shall apply *mutatis mutandis* to the election of a Deputy Chairman: Provided that any reference in regulation 66 to the presiding officer shall be construed as being a reference to the Chairman.

Period of office of Chairman and Deputy Chairman

68. Subject to the provisions of regulation 69, the Chairman and the Deputy Chairman shall hold office until their successors be elected at the general meeting referred to in regulation 65.

Vacation of office by Chairman or Deputy Chairman

69. (1) The Chairman or the Deputy Chairman shall vacate his office—

(a) if his seat as a member of the Community Council becomes vacant or is deemed to have been vacated in terms of the provisions of these Regulations;

(b) if he resigns his office as Chairman or Deputy Chairman by notice, in writing, to the Secretary of the Community Council or makes an announcement to that effect at a meeting of the Community Council.

(2) If the Chairman or the Deputy Chairman vacates his seat otherwise than in pursuance of his resignation announced at a meeting of the Community Council, the Secretary of the Community Council shall at the first ensuing meeting of the Community Council inform it accordingly.

Filling of casual vacancies

70. A casual vacancy in the office of Chairman or of Deputy Chairman shall, if the Community Council is holding a meeting when the vacancy occurs, be filled by the election at that meeting of an incumbent to the office concerned in the manner provided in these

(4) Indien meer as een lid as Voorsitter voorgestel word, word 'n geheime stemming gehou waarby—

(a) die voorsittende beampte aan elke lid teenwoordig 'n stembriefie met die name van al die kandidate daarop en met 'n amptelike merk op die keersy daarvan uitreik;

(b) elke lid die kandidaat vir wie hy wil stem, aandui deur 'n kruis teenoor die naam van sodanige kandidaat te plaas;

(c) die voorsittende beampte die name van al die lede uitroep en elke lid, wanneer sy naam uitgeroep word, sy stembriefie in 'n stembus laat val;

(d) sodra alle lede wat wil stem dit gedoen het, die voorsittende beampte met die hulp van sodanige lede as wat die Gemeenskapsraad bepaal, die stembriefies in teenwoordigheid van die Gemeenskapsraad ondersoek en die uitslag van die stemming bekend maak.

(5) Die suksesvolle kandidaat is die kandidaat wat die grootste getal stemme uitgebring, verkry.

(6) Ingeval daar bevind word dat daar ewe veel stemme uitgebring is op die kandidate wat die grootste getal stemme verkry het, bepaal die voorsittende beampte die suksevolle kandidaat by loting.

(7) 'n Lid wat opdaag nadat die lede se name uitgeroep is, is nie geregtig om te stem nie.

(8) Indien slegs een lid as Voorsitter voorgestel en gesekondeer word, word hy verkose verklaar.

Wyse waarop Ondervoorsitter verkies word

67. Onmiddellik nadat die Voorsitter verkies is, gaan die Gemeenskapsraad oor tot die verkiesing van 'n Ondervoorsitter en is die bepalings van regulasie 66 *mutatis mutandis* van toepassing by die verkiesing van 'n Ondervoorsitter: Met dien verstande dat 'n verwysing in regulasie 66 na die voorsittende beampte uitgelê word as 'n verwysing na die Voorsitter.

Ampstermyn van Voorsitter en Ondervoorsitter

68. Behoudens die bepalings van regulasie 69, beklee die Voorsitter en die Ondervoorsitter hulle amp totdat hul opvolgers gedurende die algemene vergadering in regulasie 65 bedoel, verkies word.

Ontruiming van amp deur Voorsitter of Ondervoorsitter

69. (1) Die Voorsitter of die Ondervoorsitter ontruim sy amp—

(a) indien sy setel as lid van die Gemeenskapsraad vakant raak of geag word ontruim te gewees het ingevolge die bepalings van hierdie Regulasies;

(b) indien hy uit sy amp as Voorsitter of Ondervoorsitter bedank by skriftelike kennisgewing aan die Sekretaris van die Gemeenskapsraad of 'n aankondiging tot dien effekte op 'n sitting van die Gemeenskapsraad doen.

(2) Indien die Voorsitter of die Ondervoorsitter sy setel ontruim anders as deur die aankondiging van sy bedanking op 'n sitting van die Gemeenskapsraad, verwittig die Sekretaris van die Gemeenskapsraad gedurende die eerste daaropvolgende vergadering van die Gemeenskapsraad die Gemeenskapsraad dienooreenkomstig.

Vulling van toevallige vakatures

70. 'n Toevallige vakature in die amp van Voorsitter of van Ondervoorsitter moet, indien die Gemeenskapsraad in sitting is wanneer die vakature ontstaan, gevul word deur die verkiesing tydens sodanige sitting van 'n bekleër vir die betrokke amp op die wyse in

Regulations and if the Community Council is then not holding a meeting such election shall take place at its next meeting.

Meetings of the Community Council

71. (1) Every meeting of the Community Council shall be held at the seat of the Council which shall be situated within the area for which the Community Council has been established: Provided that the Minister may direct that any such meeting be held at a place situated outside such area.

(2) The Community Council shall hold one general meeting each month.

(3) Notwithstanding the provisions of regulation 78, the Community Council shall at each general meeting thereof, whether or not there is a quorum at such meeting, decide the date and time of the next general meeting.

(4) Subject to the provisions of regulation 64, the Secretary of the Community Council shall, in writing, not less than seven days prior to a general meeting of the Council inform the members, the Chief Director and the Commissioner of the date and time fixed for, and the business to be transacted at, such general meeting.

Special meeting of the Community Council

72. (1) The Chairman may at any time convene a special meeting of the Community Council and only such business as the Chairman may lay before it or approve shall be transacted.

(2) The Secretary of the Community Council shall, in writing, not less than 72 hours prior to a special meeting of the Community Council inform the members, the Chief Director and the Commissioner of the date and time fixed for, and the business to be transacted at, such special meeting.

Meetings of Community Council open to public and press

73. (1) Subject to the provisions of subregulation (2), all meetings of the Community Council shall be open to the public and the press.

(2) If the Community Council is of the opinion that any matter can more conveniently or advantageously be dealt with in the absence of members of the public and the press, it may, subject to the provisions of section 3 (6) of the Act, exclude the public and the press from such meeting while such matter is dealt with.

Chairman to preside at meetings of Community Council

74. The Chairman or, in his absence, the Deputy Chairman shall preside at all meetings of the Community Council or if both the Chairman and the Deputy Chairman are unable through absence or other cause to preside at a meeting, the members present shall, with the Secretary of the Community Council, who shall not be entitled to vote, as presiding officer, nominate one of the members present to preside at such meeting: Provided that the Chairman of the Board or a member of the Board designated by him shall preside at the first general meeting of the Community Council until a Chairman is elected.

hierdie Regulasies bepaal, en indien die Gemeenskapsraad nie dan in sitting is nie, moet sodanige verkiesing op die daaropvolgende vergadering plaasvind.

Vergaderings van die Gemeenskapsraad

71. (1) Elke vergadering van die Gemeenskapsraad word gehou by die setel van die Gemeenskapsraad wat binne die gebied waarvoor die Gemeenskapsraad ingestel is, geleë moet wees: Met dien verstande dat die Minister kan gelas dat enige sodanige vergadering gehou moet word op 'n plek geleë buite sodanige gebied.

(2) Die Gemeenskapsraad hou een algemene vergadering elke maand.

(3) Ondanks die bepalings van regulasie 78, bepaal die Gemeenskapsraad by elke algemene vergadering daarvan, of daar 'n kworum by sodanige vergadering is aldan nie, die datum en tyd van die daaropvolgende algemene vergadering.

(4) Behoudens die bepalings van regulasie 64, stel die Sekretaris van die Gemeenskapsraad die lede, die Hoofdirekteur en die Kommissaris minstens sewe dae voor 'n algemene vergadering van die Gemeenskapsraad skriftelik in kennis van die datum en tyd bepaal vir en die sake wat behandel gaan word gedurende sodanige algemene vergadering.

Voorsitter kan sekere mosies, vrae of versoekskrifte

72. (1) Die Voorsitter kan te eniger tyd 'n spesiale vergadering van die Gemeenskapsraad byeenroep en slegs die sake wat die Voorsitter voorlê of goedkeur, word behandel.

(2) Die Sekretaris van die Gemeenskapsraad stel die lede, die Hoofdirekteur en die Kommissaris minstens 72 uur voor 'n spesiale vergadering van die Gemeenskapsraad skriftelik in kennis van die datum en tyd bepaal vir en die sake wat behandel gaan word gedurende sodanige spesiale vergadering.

Vergaderings van Gemeenskapsraad vir publiek en pers toeganklik

73. (1) Behoudens die bepalings van subregulasie (2), is alle vergaderings van die Gemeenskapsraad vir die publiek en pers toeganklik.

(2) Indien die Gemeenskapsraad van mening is dat 'n aangeleentheid geriefliker of voordeliger in die afwesigheid van lede van die publiek en die pers behandel kan word, kan hy, behoudens die bepalings van artikel 3 (6) van die Wet, die publiek en die pers van sodanige vergaderings uitsluit terwyl sodanige aangeleentheid behandel word.

Voorsitter sit voor by vergaderings van Gemeenskapsraad

74. Die Voorsitter of, in sy afwesigheid, die Ondervoorsitter, sit voor op alle vergaderings van die Gemeenskapsraad of, as sowel die Voorsitter as die Ondervoorsitter weens afwesigheid of om 'n ander rede nie op 'n vergadering kan voorsit nie, benoem die aanwesige lede onder die voorsitterskap van die Sekretaris van die Gemeenskapsraad, wat nie geregtig is om te stem nie, een van die aanwesige lede om op sodanige vergadering voor te sit: Met dien verstande dat die Voorsitter van die Raad of 'n lid van die Raad deur hom aangewys op die eerste algemene vergadering van die Gemeenskapsraad voorsit totdat 'n Voorsitter verkies is.

Attendance register

75. Every member attending a meeting of the Community Council shall sign the attendance register kept for this purpose.

Order of business

76. The business of each meeting of the Community Council shall, in accordance with the need thereof, be transacted in the following order:

(a) Notice convening the meeting;
(b) obituaries and ceremonial speeches;
(c) applications for leave of absence;
(d) official announcements;
(e) unopposed motions of the Chairman;
(f) minutes of previous meeting;
(g) reports of committees;
(h) questions of which notice has been given;
(i) motions held over from previous meetings;
(j) petitions;
(k) new motions;
(l) other matters.

Business to be transacted at meeting of Community Council

77. No business other than that included in the agenda embodied in the notice convening a meeting shall be transacted at such meeting of the Community Council: Provided that at such meeting, and with the approval of the Chairman, matters of urgency may be raised and submitted to the Council.

Quorum

78. Any number of members exceeding half the number of members of the Community Council shall form a quorum.

Procedure when quorum not present

79. (1) If after the expiration of 20 minutes after the time at which any meeting of the Council is appointed to be held, a quorum is not assembled, no meeting shall take place. If the members present unanimously consent thereto, a further period, not exceeding 10 minutes, may be permitted to enable a quorum to assemble, but the members present may by a majority decision at any stage after 10 minutes past the time appointed for such meeting, request the Chairman to convene a further meeting within 10 days, at which meeting, notwithstanding the provisions of regulation 78, the members present shall form a quorum and if the Chairman complies with such request the provisions of regulation 71 shall *mutatis mutandis* apply.

(2) If during the sitting of any meeting of the Council a quorum is found not to be present no further business shall be conducted until a quorum is reassembled. Should a quorum not be present and 10 minutes elapse after the attention of the Chairman is drawn to the absence of a quorum, the meeting shall stand adjourned until a time to be decided by the Chairman.

(3) If from the number of members voting it appears that a quorum is not present the voting shall be invalid.

Adjournment of meeting

80. If for any reason whatsoever, the business to be transacted at any meeting of the Community Council cannot be completed at such meeting, the Chairman may adjourn such meeting to a date and time to be determined by the Chairman in consultation with the members.

Bywoningsregister

75. Elke lid wat 'n vergadering van die Gemeenskapsraad bywoon, teken sy naam in die bywoningsregister wat vir dié doel gehou word.

Volgorde van werksaamhede

76. Die werksaamhede van elke vergadering van die Gemeenskapsraad word na gelang daarvan of dit nodig is, in die volgende volgorde verrig:

(a) Beskrywingsbrief;
(b) sterflys en seremoniële toesprake;
(c) aansoeke om afwesigheidsverlof;
(d) amptelike aankondigings;
(e) onbestrede mosies van die Voorsitter;
(f) notule van vorige vergadering;
(g) verslae van komitees;
(h) vrae waarvan kennis gegee is;
(i) mosies wat sedert vorige vergaderings oorstaan;
(j) versoekskrifte;
(k) nuwe mosies;
(l) ander aangeleenthede.

Werksaamhede wat by vergadering van Gemeenskapsraad behandel word

77. Geen saak wat nie in die sakelys in die beskrywingsbrief vermeld is nie, word op daardie vergadering van die Gemeenskapsraad behandel nie: Met dien verstande dat, met die toestemming van die Voorsitter, dringende sake op sodanige vergadering geopper en aan die Gemeenskapsraad voorgelê kan word.

Kworum

78. Enige getal lede wat meer as die helfte van die getal lede van die Gemeenskapsraad is, vorm 'n kworum.

Prosedure wanneer kworum nie teenwoordig nie

79. (1) Indien daar na afloop van 20 minute na die tyd waarop 'n vergadering van die Gemeenskapsraad moet begin geen kworum is nie, vind geen vergadering plaas nie. Indien die aanwesige lede dit eens is, kan 'n verdere tydperk van hoogstens 10 minute toegelaat word om 'n kworum te laat byeenkom, maar die aanwesige lede kan, deur 'n meerderheidsbeslissing, te eniger tyd na die verloop van 10 minute na die tyd waarop sodanige vergadering moet begin, die Voorsitter versoek om 'n verdere vergadering binne 10 dae te belê, en by sodanige vergadering, ondanks die bepalings van regulasie 78, maak die lede teenwoordig 'n kworum uit en indien die Voorsitter aan so 'n versoek voldoen, is die bepalings van regulasie 71 *mutatis mutandis* van toepassing.

(2) Indien daar gedurende die sitting van 'n vergadering van die Gemeenskapsraad bevind word dat 'n kworum nie teenwoordig is nie, word geen verdere sake behandel nie totdat 'n kworum opnuut byeengekom het. Indien 'n kworum nie teenwoordig is nie en 10 minute verstryk nadat die Voorsitter se aandag op die gebrek aan 'n kworum gevestig is, word die vergadering verdaag tot 'n tyd deur die Voorsitter bepaal.

(3) As dit uit die getal lede wat deelneem aan 'n stemming, blyk dat 'n kworum nie teenwoordig is nie, is die stemming ongeldig.

Verdaging van vergadering

80. Indien, om watter rede ook al, die sake wat by 'n vergadering van die Gemeenskapsraad behandel staan te word, nie by sodanige vergadering afgehandel kan word nie, kan die Voorsitter sodanige vergadering verdaag tot 'n datum en tyd wat die Voorsitter in oorleg met die lede bepaal.

University of Fort Hare
Together in Excellence

Questions

81. A member may ask a question at any meeting of the Community Council—

(a) in connection with any matter arising out of or having a bearing on an item in the report of a committee during the discussion of such report;

(b) regarding the exercise of any of the Council's powers or performance of any of its duties or conditions within the area for which the Community Council has been established.

Notice of question, motion or petition to be given

82. (1) Notice of any question, referred to in regulation 81 (b), motion (excluding any unopposed motion of the Chairman) or petition which a member wishes to pose, move or present, as the case may be, at or to any general meeting of the Community Council shall be in writing and signed by such member and shall be forwarded to the Secretary of the Community Council who shall, subject to the provisions of subregulation (2) and regulation 84, place it on the agenda for the next ensuing general meeting.

(2) If any such question, motion or petition is received by the Secretary of the Community Council at least 10 days before the next ensuing general meeting of the Community Council he shall place it on the agenda for such meeting or otherwise he shall place it on the agenda for the next ensuing general meeting.

(3) If a member is not present to pose his question or present his petition when he is called upon to do so by the Chairman, and he has not authorised any other member to do so on his behalf, the question or petition shall lapse.

Chairman may reject certain motions, questions or petitions

83. (1) The Chairman may reject any motion, question or petition which in his opinion will lead to the discussion of a matter already included in the agenda or which does not concern the area for which the Community Council has been established or over which the Council has no jurisdiction or which is not clear and he shall reject any motion or petition which, if it were to be moved or accepted, as the case may be, would be against the law.

(2) If the Chairman so rejects any motion, question or petition he shall inform the Community Council of his decision and shall not call upon the member concerned to move such motion, pose such question or present such petition, as the case may be.

Motion to rescind a resolution passed during the previous three months

84. No motion to rescind a resolution passed by the Community Council during the previous three months or having the same effect as one that has been rejected by the Community Council during the previous three months shall be placed on the agenda unless the notice of such motion is signed by at least three members in addition to the member who wishes to move such motion and after the Community Council has dealt with such motion no member may move a similar motion within six months thereafter.

Procedure on moving a motion

85. (1) When motions come up for discussion, the Chairman shall, subject to the provisions of regulation 83, read out the numbers and names of the movers

Vrae

81. 'n Lid kan op 'n vergadering van die Gemeenskapsraad 'n vraag stel—

(a) oor 'n saak wat voortspruit uit of in verband staan met 'n item van die verslag van 'n komitee tydens die bespreking van sodanige verslag;

(b) betreffende die uitoefening van enige van die Gemeenskapsraad se bevoegdhede, die uitvoering van enige van sy pligte, of toestande binne die gebied waarvoor die Gemeenskapsraad ingestel is.

Wyse waarop kennisgewing van vraag, mosie of versoekskrif geskied

82. (1) Kennis van 'n vraag in regulasie 81 (b) bedoel, 'n mosie (uitgesonderd 'n onbestrede mosie van die Voorsitter) of versoekskrif wat 'n lid wil stel of indien, na gelang van die geval, op 'n vergadering van die Gemeenskapsraad moet skriftelik wees en deur sodanige lid onderteken wees en word aan die Sekretaris van die Gemeenskapsraad gestuur, en behoudens die bepalings van subregulasie (2) en regulasie 84 plaas hy dit op die sakelys van die daaropvolgende algemene vergadering.

(2) Indien sodanige vraag, mosie of versoekskrif deur die Sekretaris van die Gemeenskapsraad minstens 10 dae voor die daaropvolgende algemene vergadering van die Gemeenskapsraad ontvang is, plaas hy dit op die sakelys vir sodanige vergadering, of anders plaas hy dit op die sakelys van die daaropvolgende algemene vergadering.

(3) As 'n lid nie teenwoordig is om sy vraag te stel of sy versoekskrif in te dien nie wanneer hy deur die Voorsitter versoek word om dit te doen en hy nie 'n ander lid gemagtig het om dit namens hom te stel of in te dien nie, verval die vraag of versoekskrif.

Voorsitter kan sekere mosies, vrae of versoekskrifte verwerp

83. (1) Die Voorsitter kan 'n mosie, vraag of versoekskrif verwerp wat na sy mening tot die bespreking sou lei van 'n saak wat reeds in die sakelys vervat is of wat nie op die gebied waarvoor die Gemeenskapsraad ingestel is betrekking het nie of waaroor die Gemeenskapsraad nie regsbevoegdheid het nie of wat nie duidelik is nie, en hy verwerp 'n mosie of versoekskrif wat, as dit voorgestel of aangeneem word, na gelang van die geval, strydig sal wees met die wet.

(2) Indien die Voorsitter 'n mosie, vraag of versoekskrif aldus verwerp, stel hy die Gemeenskapsraad in kennis van sy beslissing en hy versoek nie die betrokke lid om sodanige mosie in te dien, sodanige vraag te stel of sodanige versoekskrif in te dien nie, na gelang van die geval.

Mosie ter herroeping van 'n besluit geneem binne voorafgaande drie maande

84. Geen mosie ter herroeping van 'n besluit wat gedurende die voorafgaande drie maande geneem is of 'n mosie van dieselfde strekking as een wat binne die voorafgaande drie maande deur die Gemeenskapsraad verwerp is, word op die sakelys geplaas nie, tensy die kennisgewing van die mosie deur minstens drie lede, benewens die voorsteller van die mosie, onderteken is, en nadat die Gemeenskapsraad sodanige mosie afgehandel het, mag geen lid weer 'n soortgelyke mosie binne ses maande daarna indien nie.

Prosedure by die indiening van 'n mosie

85. (1) Wanneer mosies aan die orde kom, lees die Voorsitter, behoudens die bepalings van regulasie 83, die nommers en die name uit van die voorstellers van

of all the motions appearing on the agenda and he shall ascertain which motions are unopposed and such unopposed motions shall immediately be carried.

(2) Immediately after such unopposed motions have been carried the Chairman shall, in the order in which the remaining motions appear on the agenda, call upon the members concerned to move such motions.

(3) A member called upon by the Chairman to move a motion shall rise in his place and after making such remarks as he may wish he shall move the motion.

(4) If a member is not present to move a motion when called upon to do so by the Chairman, and he has not authorised any other member to do so on his behalf, the motion shall lapse.

(5) Every motion moved shall require seconding and if a motion is not seconded it shall lapse.

(6) When a motion has been moved and seconded, the Chairman shall read it or cause it to be read after which debate may take place on such motion and may continue, subject to the provisions of these Regulations, for as long as any member who is entitled to speak wishes to speak.

(7) When no more members wish or are entitled to speak the Chairman shall put the motion to the Community Council for its decision.

(8) When an amendment or amendments have been proposed to a motion the Chairman shall first put the amendments and after all amendments have been disposed of, again read and put the original motion or if it has been amended the motion as amended, so as to enable the members of the Community Council to be fully acquainted with the terms thereof.

(9) The order in which amendments shall be put shall be in the discretion of the Chairman.

(10) No member may speak on a motion or amendment after it has been fully put by the Chairman.

Amendments to motions

86. (1) A member who has risen to speak on a motion may propose an amendment to such motion.

(2) Such amendment shall require seconding.

(3) An amendment may take one of the following forms:

(a) To leave out one or more words of the motion;

(b) to insert one or more words in the motion;

(c) to add one or more words at the end of the motion;

(d) to substitute certain other words for certain words contained in the motion.

(4) Members may propose more than one amendment to a motion but a proposal to further amend a proposed amendment shall be out of order.

(5) Debate may take place on any amendment to a motion.

Postponement of motions

87. (1) Any member may move that a motion be postponed or referred to a committee of the Community Council for consideration.

(2) Such motion shall be seconded.

(3) Notwithstanding the provisions of regulation 97 (2), the mover of such motion shall speak for not more than five minutes and the seconder shall not be permitted to speak beyond formally seconding it.

al die mosies wat op die sakelys verskyn, en hy stel vas watter mosies onbestrede is, en sodanige onbestrede mosies word dadelik aangeneem.

(2) Onmiddellik nadat sodanige onbestrede mosies aangeneem is, versoek die Voorsitter die betrokke lede, beurtelings in die volgorde waarin die oorblywende mosies op die sakelys verskyn, om sodanige mosies in te dien.

(3) 'n Lid wat deur die Voorsitter versoek word om 'n mosie in te dien, staan in sy plek op en na enige opmerkings wat hy wens te maak, dien hy die mosie in.

(4) As 'n lid nie teenwoordig is nie om sy mosie in te dien wanneer hy deur die Voorsitter versoek word om dit te doen en hy nie 'n ander lid gemagtig het om dit namens hom in te dien nie, verval die mosie.

(5) Elke mosie ingedien moet gesekondeer word, en as 'n mosie nie gesekondeer word nie, verval dit.

(6) Wanneer 'n mosie ingedien is en gesekondeer is, lees die Voorsitter dit uit, of laat dit uitlees, waarna sodanige mosie gedebatteer kan word en die debat kan, behoudens die bepalings van hierdie Regulasies, so lank aanhou as wat enige lid wat die reg het om te praat, nog wil praat.

(7) Wanneer daar nie meer lede is wat wens, of geregtig is, om te praat nie, stel die Voorsitter die mosie aan die Gemeenskapsraad vir beslissing.

(8) Wanneer 'n amendement of amendemente op 'n mosie voorgestel is, stel die Voorsitter eers die amendemente en na al die amendemente afgehandel is, lees en stel hy weer die oorspronklike mosie of, indien dit gewysig is, die mosie, soos gewysig, ten einde die lede van die Gemeenskapsraad ten volle vertroud te maak met die bepalings daarvan.

(9) Die volgorde waarin amendemente gestel word, is volgens die diskresie van die Voorsitter.

(10) Geen lid mag oor 'n mosie of 'n amendement praat nadat dit ten volle deur die Voorsitter gestel is nie.

Amendemente op mosies

86. (1) 'n Lid wat opgestaan het om 'n mosie te bespreek, kan 'n amendement op die mosie voorstel.

(2) Sodanige amendement moet gesekondeer word.

(3) 'n Amendement kan een van die volgende vorme aanneem:

(a) Om een of meer van die woorde van die mosie weg te laat;

(b) om een of meer woorde in die mosie in te voeg;

(c) om een of meer woorde aan die einde van die mosie by te voeg;

(d) om sekere woorde van die mosie deur sekere ander woorde te vervang.

(4) Lede kan meer as een amendement op 'n mosie voorstel, maar 'n voorstel vir die verdere wysiging van 'n voorgestelde amendement is buite die orde.

(5) 'n Amendement op 'n mosie kan gedebatteer word.

Uitstel van mosies

87. (1) 'n Lid kan voorstel dat 'n mosie uitgestel of na 'n komitee van die Gemeenskapsraad verwys word vir oorweging.

(2) Sodanige voorstel moet gesekondeer word.

(3) Ondanks die bepalings van regulasie 97 (2), kan die indiener van sodanige voorstel hoogstens vyf minute lank praat en die sekondant word nie toegelaat om te praat nie buiten om dit formeel te sekondeer.

(4) Immediately after such motion has been seconded the Chairman shall put the motion to the Community Council for its decision.

Withdrawal of motions and amendments

88. A motion or an amendment proposed to such motion may be withdrawn at the request of the mover thereof by leave of the Community Council at any time before the question has been fully put.

Moving reports at meetings of Community Council

89. (1) All recommendations of any committee shall be reported to the Council and the chairman of the committee concerned or in his absence a member of the committee called upon by the Chairman of the Council, shall introduce the report by moving that the report of the committee concerned be received.

(2) The Council having agreed to receive the report, the Chairman of the Community Council shall thereupon put the recommendations contained in the various items *seriatim*, unless for good cause he sees fit to vary their order. If the majority of the members of the Council present agree with any recommendation it shall forthwith become a resolution of the Council.

Item to be referred back for further consideration

90. (1) When the report of any committee has been received by the Council and a recommendation in that report is before the Council, any member may move that the item be referred back to such committee for further consideration.

(2) If such motion is carried, the debate on the recommendation shall end forthwith.

Chairman to maintain order

91. Order shall be maintained in the Community Council by the Chairman whose decision on a point of order shall not be open to appeal and shall not be reviewed by the Community Council.

Members to sit down when Chairman rises

92. When the Chairman rises during a meeting of the Community Council every member shall sit down and members shall be silent so that the Chairman may be heard without interruption.

Members to speak standing

93. A member shall speak standing and shall address his observations to the Chair.

Chairman to select speaker

94. If two or more members rise at the same time to speak the Chairman shall select one member and call on him to speak.

Members not speaking to be seated

95. When a member has finished speaking he shall resume his seat and any other member wishing to speak shall rise.

Matters on which members may speak

96. A member may address the Community Council on the question before the Council or upon any amendment proposed thereto, or upon a question or amendment to be proposed by himself, or upon a

(4) Onmiddellik nadat sodanige voorstel gesekondeer is, stel die Voorsitter die voorstel aan die Gemeenskapsraad vir beslissing.

Terugtrekking van mosies en amendemente

88. 'n Mosie of 'n voorgestelde amendement van sodanige mosie kan te eniger tyd voordat die mosie ten volle gestel is, teruggetrek word op versoek van die voorsteller daarvan met die verlof van die Gemeenskapsraad.

Indiening van verslae op vergaderings van Gemeenskapsraad

89. (1) Verslag oor alle aanbevelings van 'n komitee word aan die Gemeenskapsraad gedoen en die voorsitter van die betrokke komitee, of in sy afwesigheid 'n lid van die komitee deur die Voorsitter van die Gemeenskapsraad aangesê, dien die verslag in deur voor te stel dat die verslag van die betrokke komitee in ontvangs geneem word.

(2) Nadat die Gemeenskapsraad besluit het om die verslag in ontvangs te neem, stel die Voorsitter van die Gemeenskapsraad die aanbevelings vervat in die verskillende items *seriatim*, tensy hy goeddunk om hul volgorde te verander. Indien die meerderheid van die aanwesige lede van die Gemeenskapsraad 'n aanbeveling aanvaar, word dit onverwyld 'n besluit van die Gemeenskapsraad.

Item kan terugverwys word vir verdere oorweging

90. (1) Wanneer die verslag van 'n komitee deur die Gemeenskapsraad in ontvangs geneem is en 'n aanbeveling van sodanige verslag voor die Gemeenskapsraad dien, kan 'n lid voorstel dat die item na sodanige komitee terugverwys word vir verdere oorweging.

(2) As sodanige voorstel aangeneem word, eindig die debat oor die aanbeveling onverwyld.

Voorsitter handhaaf orde

91. Orde word in die Gemeenskapsraad deur die Voorsitter gehandhaaf en sy beslissing oor 'n punt van orde is nie onderworpe aan appèl nie en word nie deur die Gemeenskapsraad hersien nie.

Lede moet sit wanneer Voorsitter opstaan

92. Wanneer die Voorsitter gedurende 'n vergadering van die Gemeenskapsraad opstaan, sit elke lid en lede bly stil sodat die Voorsitter ongestoord gehoor kan word.

Lede praat staande

93. Elke lid staan as hy praat en rig sy opmerkings tot die Stoel.

Voorsitter kies spreker

94. Indien twee of meer lede gelyk opstaan om te praat, kies die Voorsitter een lid en versoek hom om te praat.

'n Lid wat nie praat nie, moet sit

95. 'n Lid wat klaar gepraat het, moet sit en enige ander lid wat wil praat, moet opstaan.

Sake waaroor lede kan praat

96. 'n Lid kan oor die mosie voor die Gemeenskapsraad praat of oor amendemente daarop voorgestel, of oor 'n mosie of amendement wat hy self wil voorstel, of oor 'n punt van orde voortspruitende uit die debat,

point of order arising out of debate, but not otherwise and no discussion or debate shall be permitted which will anticipate any matter on the agenda.

Speaking on questions at meetings of Community Council

97. (1) No member shall address the Community Council more than once on the question before the Community Council except in explanation, such explanation being allowed only in case a material part of his speech has been misquoted or misunderstood, and he shall not introduce any new matter and no debate shall be allowed on such explanation.

(2) No member may, without the approval of the Community Council, exceed 10 minutes in speaking on any question.

(3) Notwithstanding the provisions of subregulation (1), the member who introduced the question may reply and such member having so replied, the debate shall be closed and the question put to the vote.

Form of address

98. During proceedings at a meeting of the Community Council members shall refer to one another as "the honourable member" (stating the member's name).

Conduct of members during meetings

99. During a meeting of the Community Council a member shall—

(a) enter or leave the Chamber with decorum;

(b) in the case of a male, be bare-headed while in the Chamber and bow to the Chair when entering or leaving the Chamber or passing to or from his place;

(c) not pass between the Chair and any member speaking;

(d) not address the Chairman by name or any other title save as "Mr Chairman";

(e) not cross the floor of the Chamber unnecessarily;

(f) when crossing from one side of the Chamber to the other, pause in the centre and bow to the Chair;

(g) not read newspapers, books, letters or other documents except such matter therein as may be directly connected with the business then under consideration;

(h) while a member is speaking be silent and not make unseemly interruptions;

(i) when called to order by the Chairman immediately resume his seat; and

(j) when the Community Council adjourns keep his place until the Chairman has left the Chair.

Speeches to be relevant

100. A member shall restrict his observations to the subject under discussion and shall not introduce matters irrelevant to that subject.

Irrelevance or repetition

101. The Chairman after having called the attention of the Community Council to the conduct of a member who persists in irrelevance or tedious repetition of his own or some other member's arguments in debate, may order him to discontinue his speech and resume his seat.

maar anders nie en geen bespreking of debat wat 'n saak wat op die sakelys voorkom, sal vooruitloop, word toegelaat nie.

Die praat oor onderwerpe op vergaderings van Gemeenskapsraad

97. (1) Geen lid spreek die Gemeenskapsraad meer as een maal oor 'n mosie voor die Gemeenskapsraad toe nie, behalwe by wyse van verduideliking, welke verduideliking toegelaat word slegs ingeval 'n wesentlike deel van 'n lid se toespraak verkeerd aangehaal of misverstaan is en hy mag geen nuwe aangeleentheid behandel nie en oor sodanige verduideliking word geen debat toegelaat nie.

(2) Geen lid praat sonder die toestemming van die Gemeenskapsraad langer as 10 minute oor enige mosie nie.

(3) Ondanks die bepalings van subregulasie (1), kan die lid wat 'n mosie ingedien het, repliek lewer en nadat sodanige lid sodanige repliek gelewer het, is die debat gesluit en word die mosie in stemming gebring.

Aanspreekvorm

98. Gedurende verrigtings by 'n vergadering van die Gemeenskapsraad verwys lede na mekaar as "die agbare lid" (die naam van lid moet gemeld word).

Gedrag van lede tydens vergaderings

99. Gedurende vergaderings van die Gemeenskapsraad moet 'n lid—

(a) die Raadsaal met dekorum binnekom of verlaat;

(b) in die geval van 'n man, blootshoof wees terwyl hy in die Raadsaal is en 'n buiging voor die Stoel maak wanneer hy die Raadsaal binnekom of verlaat, of wanneer hy na of van sy sitplek gaan;

(c) nie tussen die Stoel en 'n lid wat aan die woord is, verbygaan nie;

(d) nie die Voorsitter by sy naam of enige ander titel as "Meneer die Voorsitter" aanspreek nie;

(e) nie onnodig oor die vloer van die Raadsaal stap nie;

(f) wanneer hy van een deel van die Raadsaal na 'n ander gaan, in die middel stilstaan en 'n buiging voor die Stoel maak;

(g) nie nuusblaaie, boeke, briewe of ander dokumente lees nie, uitgesonderd sodanige stof daarin as wat regstreeks in verband staan met die aangeleentheid dan onder oorweging;

(h) stilbly terwyl 'n lid aan die woord is, en hom nie onnodig in die rede val nie;

(i) wanneer hy deur die Voorsitter tot orde geroep is, dadelik gaan sit; en

(j) wanneer die Gemeenskapsraad verdaag, in sy sitplek bly totdat die Voorsitter die Stoel verlaat het.

Toesprake moet ter sake wees

100. 'n Lid moet sy opmerkings oor die onderwerp in bespreking beperk, en mag geen sake wat nie op daardie onderwerp betrekking het nie, byhaal nie.

Ontoepaslikheid of herhaling

101. Nadat die Voorsitter die aandag van die Gemeenskapsraad gevestig het op die gedrag van 'n lid wat volhou om aangeleenthede wat nie ter sake is nie te bespreek of om sy eie argumente of dié van 'n ander lid in die debat tot vervelens toe te herhaal, kan hy die lid gelas om sy toespraak te staak en sy sitplek in te neem.

University of Fort Hare

When interruption may be made

102. A member shall not interrupt the speech of any other member except—

(a) by rising to a point of order, when the member speaking shall resume his seat and the member interrupting shall merely direct attention to the point which he wishes to bring to notice and submit it to the Chairman for decision; or

(b) to put a relevant question to the speaker with the consent of the Chairman.

Insulting language out of order

103. It shall be out of order to use offensive and insulting language about members of the Community Council.

Imputation of improper motives out of order

104. A member shall not impute improper motives to any other member.

Personal charges out of order

105. A member shall not make a personal charge in reference to any other member.

Offensive expressions about Community Council out of order

106. A member shall not use offensive expressions about the conduct of proceedings at meetings of the Community Council.

Alleged improper conduct

107. The personal conduct or any alleged improper motives of a member shall not be referred to except on a motion moved for that purpose.

Disorderly conduct of members

108. The Chairman shall order a member whose conduct is grossly disorderly or who fails to comply with an order made under regulation 101, to withdraw forthwith from the Chamber for the remainder of the meeting and should he fail to do so the Chairman may cause him to be ejected from the Chamber and take such reasonable steps as are necessary to ensure that such member does not return to the meeting.

Chairman's powers to adjourn or suspend meeting of Community Council

109. In the case of great disorder arising during a meeting of the Community Council the Chairman may adjourn or suspend the meeting for such reasonable period as he may determine.

Appointment of committees of Community Council

110. (1) Any committee of the Community Council shall be appointed by the Council at a meeting of the Council.

(2) The Community Council shall determine the terms of reference and the powers and duties of such committee at such meeting: Provided that it may from time to time at any meeting thereof amend such terms of reference and add to or withdraw any such powers and duties.

(3) Members of a committee to which the Community Council has assigned any of its powers and duties shall remain in office until the day before the day fixed for the holding of the next ensuing general meeting referred to in regulation 65.

Constitution of committees of Community Council

111. A committee shall consist of not less than three and not more than seven members of the Community Council.

Wanneer lede in die rede geval mag word

102. Geen lid mag 'n ander lid wat aan die woord is, in die rede val nie, behalwe—

(a) wanneer hy op 'n punt van orde opstaan, en dan moet die lid wat aan die woord was, gaan sit, en die lid wat opgestaan het, moet slegs die punt noem waarop hy die aandag wil vestig en dit aan die Voorsitter voorlê vir sy beslissing; of

(b) om 'n tersaaklike vraag aan die spreker te stel met die toestemming van die Voorsitter.

Beledigende taal buite die orde

103. Dit is buite die orde om aanstootlike en beledigende taal omtrent lede van die Gemeenskapsraad te gebruik.

Toeskrywing van onbehoorlike motiewe buite die orde

104. 'n Lid mag nie onbehoorlike motiewe aan 'n ander lid toeskryf nie.

Persoonlike aanvalle buite die orde

105. 'n Lid mag nie 'n persoonlike aanval ten opsigte van enige ander lid maak nie.

Aanstootlike uitdrukkings omtrent Gemeenskapsraad buite die orde

106. 'n Lid mag nie aanstootlike uitdrukkings oor die bestuur van verrigtings by vergaderings van die Gemeenskapsraad gebruik nie.

Beweerde onbehoorlike gedrag

107. Daar mag nie verwys word na die persoonlike gedrag of enige beweerde onbehoorlike motiewe van 'n lid nie, behalwe na 'n mosie vir daardie doel ingedien.

Wanordelike gedrag van lid

108. Die Voorsitter gelas 'n lid wie se gedrag uiters wanordelik is of wat versuim om te voldoen aan 'n opdrag gegee kragtens regulasie 101, om die Raadsaal onverwyld vir die res van die vergadering te verlaat en as hy versuim om dit te doen, kan die Voorsitter hom uit die Raadsaal laat verwyder en sodanige redelike stappe doen as wat nodig is om te verseker dat sodanige lid nie na die vergadering terugkeer nie.

Voorsitter se bevoegdhede om vergadering van Gemeenskapsraad te verdaag of op te skort

109. Ingeval groot wanordelikheid gedurende 'n vergadering van die Gemeenskapsraad ontstaan, kan die Voorsitter die vergadering verdaag of opskort vir 'n redelike tydperk deur hom bepaal.

Aanstelling van komitees van Gemeenskapsraad

110. (1) 'n Komitee van die Gemeenskapsraad word aangestel op 'n vergadering van die Gemeenskapsraad.

(2) Die Gemeenskapsraad bepaal die opdragte aan en die bevoegdhede en pligte van sodanige komitee op sodanige vergadering: Met dien verstande dat dit van tyd tot tyd op 'n vergadering daarvan sodanige opdragte kan wysig en tot sodanige bevoegdhede en pligte byvoeg of enige sodanige bevoegdhede en pligte intrek.

(3) Lede van 'n komitee waaraan die Gemeenskapsraad enige van sy bevoegdhede en pligte opgedra het, beklee hul ampte tot die dag voor die dag wat bepaal is vir die hou van die daaropvolgende algemene vergadering in regulasie 65 bedoel, voorafgaan.

Samestelling van komitees van Gemeenskapsraad

111. 'n Komitee bestaan uit minstens drie en hoogstens sewe lede van die Gemeenskapsraad.

Chairman of committee

112. The Community Council shall appoint the chairman of every committee: Provided that if such chairman is unable to be present at any meeting of such committee the committee shall, from their own ranks, elect another chairman whose tenure of office shall be for the day of his election.

Meetings of committees of Community Council

113. (1) A committee shall meet on the date and at the time determined by the chairman thereof in consultation with the members thereof.

(2) The meetings of any committee shall be held in private unless the committee otherwise orders: Provided that this provision shall not be so interpreted as to exclude officials or witnesses necessarily associated with the business of such committee.

(3) Notwithstanding the provisions of subregulation (2), members of the Community Council who are not members of a particular committee thereof may be present at any meeting of such committee and take part in the discussion, but shall not have the power to vote.

Quorum

114. Any number of members exceeding half the number of the members of any committee shall form a quorum.

Procedure when quorum not present

115. (1) If after the expiration of 20 minutes after the time at which any meeting of any committee is appointed to be held, a quorum is not assembled, no meeting shall take place. If the members of the committee present unanimously consent thereto, a further period, not exceeding 10 minutes, may be permitted to enable a quorum to assemble, but the members present may by a majority decision at any stage after 10 minutes past the time appointed for such meeting, request the chairman to convene a further meeting within seven days, at which meeting, notwithstanding the provisions of regulation 114, the members present shall form a quorum.

(2) If during the sitting of any meeting of a committee a quorum is found not to be present no further business shall be conducted until a quorum is reassembled. Should a quorum not be present and 10 minutes elapse after the attention of the chairman is drawn to the absence of a quorum, the meeting shall stand adjourned until a time to be determined by the chairman in consultation with the members thereof present.

(3) If from the number of members voting it appears that a quorum is not present the voting shall be invalid.

How question before Community Council or committee is to be decided

116. All questions before the Community Council or any committee of the Community Council shall be determined by a majority of votes of the members present and in the case of an equality of votes the chairman of the meeting shall have a second or casting vote.

Mode of putting question for decision

117. When the Chairman or chairman of a committee, as the case may be, puts a question for decision, he shall do so by saying: "All agreed?" and if any member says "No" he shall order that a ballot be taken by show of hands and shall then total the number of votes cast for and against the question and declare the number to the Council or committee, as the case may be.

Voorsitter van komitee

112. Die Gemeenskapsraad stel die voorsitter van elke komitee aan: Met dien verstande dat indien sodanige voorsitter nie in staat is om teenwoordig te wees op 'n vergadering van sodanige komitee nie, verkies die komitee uit die geledere 'n ander voorsitter wie se ampstermyn die dag van sy verkiesing is.

Vergaderings van komitees van Gemeenskapsraad

113. (1) 'n Komitee sit op die datum en tyd deur die voorsitter daarvan bepaal in oorleg met die lede daarvan.

(2) Die vergaderings van 'n komitee is privaat, tensy die komitee anders gelas: Met dien verstande dat hierdie bepaling nie uitgelê word as sou dit beamptes of getuies wat noodsaaklikerwys geassosieer is met die werksaamhede van sodanige komitee uitsluit nie.

(3) Ondanks die bepalings van subregulasie (2), kan lede van die Gemeenskapsraad wat nie lede is van 'n besondere komitee daarvan nie, teenwoordig wees by 'n vergadering van sodanige komitee en aan die bespreking deelneem, maar hulle het nie die reg om te stem nie.

Kworum

114. Enige getal lede wat meer as die helfte van die getal lede van 'n komitee is, vorm 'n kworum.

Prosedure wanneer kworum nie teenwoordig nie

115. (1) Indien daar na verloop van 20 minute na die tyd waarop 'n vergadering van 'n komitee moet begin geen kworum is nie, vind geen vergadering plaas nie. Indien die aanwesige lede van die komitee dit eens is, kan 'n verdere tydperk van hoogstens 10 minute toegelaat word om 'n kworum te laat byeenkom, maar die aanwesige lede kan, deur 'n meerderheidsbeslissing te eniger tyd na verloop van 10 minute na die tyd waarop sodanige vergadering moet begin, die voorsitter versoek om 'n verdere vergadering binne sewe dae te belê, en by sodanige vergadering, ondanks die bepalings van regulasie 114, maak die lede teenwoordig 'n kworum uit.

(2) Indien daar gedurende die sitting van 'n vergadering van 'n komitee bevind word dat 'n kworum nie teenwoordig is nie, word geen verdere sake behandel nie totdat 'n kworum opnuut byeengekom het. Indien 'n kworum nie teenwoordig is nie en 10 minute verstryk nadat die voorsitter se aandag op die gebrek aan 'n kworum gevestig is, word die vergadering verdaag tot 'n tyd deur die voorsitter in oorleg met die aanwesige lede daarvan bepaal.

(3) As dit uit die getal lede wat deelneem aan 'n stemming, blyk dat 'n kworum nie teenwoordig is nie, is die stemming ongeldig.

Hoe mosie voor Gemeenskapsraad of komitee beslis word

116. Alle mosies voor die Gemeenskapsraad of 'n komitee van die Gemeenskapsraad word beslis deur 'n meerderheid van stemme van die aanwesige lede en by 'n staking van stemme het die voorsitter van die vergadering 'n tweede of beslissende stem.

Wyse waarop mosie vir beslissing voorgelê word

117. Wanneer die Voorsitter of die voorsitter van 'n komitee, na gelang van die geval, 'n mosie vir beslissing voorlê, doen hy dit deur te sê: "Stem almal saam?" en indien enige lid "Nee" sê, gelas hy 'n stemming deur die opsteek van hande en hy tel die getal stemme uitgebring vir en teen die mosie en daarna maak hy die getalle bekend aan die Gemeenskapsraad of komitee, na gelang van die geval.

Minutes of meetings

118. (1) The Secretary of the Community Council shall cause the minutes of the proceedings at any meeting of the Community Council and meetings of any committee of the Community Council to be recorded and there shall be noted in such minutes the names of every member and official present.

(2) Such minutes shall be confirmed at the next ensuing general meeting of the Community Council or the next ensuing meeting of such committee and the Chairman or the chairman of the committee, as the case may be, shall thereafter sign them.

(3) If a copy of such minutes has been sent to each member at least two days prior to the meetings referred to in subregulation (2), such minutes shall be taken as read with a view to confirmation.

(4) No motion, proposal or discussion shall be allowed on the minutes, except as to their accuracy.

CHAPTER 7

GENERAL

Member to look after interest of ward he represents

119. In addition to any other duties imposed on a member of the Community Council, such member shall, on behalf of the ward he represents and within the area for which the Community Council has been established look after the interests of such ward and keep the residents of the ward concerned informed of, and advise such residents regarding, matters affecting the general interest of the persons residing in such ward or area.

Provisions as to members being interested in contracts with the Community Council

120. No member of the Community Council shall, either on his own behalf or on behalf of a partnership in which he is interested, be concerned in or interested in any transaction, contract or arrangement whatsoever made by or with the Community Council with the exception of the purchase and sale or hiring of sites, premises or buildings.

Member not to have financial interest in matter before meeting

121. A member of the Community Council shall, at any meeting of the Community Council or any committee thereof, not be present during the discussion of or the voting on any matter in which either he, his spouse, his partner, the partner of his spouse, his employer (except the State) or the employer (except the State) of his spouse has a direct or indirect financial interest.

Payment of members

122. There shall be payable to members of the Community Council such allowances as the Minister after consultation with the Community Council and the Board shall determine.

General penalty

123. Any person who is convicted of an offence in terms of these Regulations shall be liable to a fine not exceeding R200 or, in default of payment, imprisonment for a period not exceeding six months.

Certain provisions applicable to persons referred to in section 3 (6) of the Act

124. The provisions of regulations 92 to 96 inclusive, and 98 to 106 inclusive, shall *mutatis mutandis* apply to any persons referred to in section 3 (6) of the Act.

Notule van vergaderings

118. (1) Die Sekretaris van die Gemeenskapsraad laat die notule van die verrigtings van 'n vergadering van die Gemeenskapsraad en vergaderings van 'n komitee van die Gemeenskapsraad hou en die naam van elke lid en beampte aanwesig word in sodanige notule aangeteken.

(2) Sodanige notule word bekragtig by die daaropvolgende algemene vergadering van die Gemeenskapsraad of die daaropvolgende vergadering van sodanige komitee en daarna onderteken die Voorsitter of die voorsitter van die komitee, na gelang van die geval, die notule.

(3) Indien 'n afskrif van sodanige notule minstens twee dae voor die vergaderings in subregulasie (2) bedoel aan elke lid gestuur is, word aanvaar dat sodanige notules met die oog op bekragtiging gelees is.

(4) Geen mosie, voorstel of bespreking ten opsigte van die notule, behalwe wat die juistheid daarvan betref, word toegelaat nie.

HOOFSTUK 7

ALGEMEEN

Lid behartig belange van wyk wat hy verteenwoordig

119. Benewens enige ander pligte aan 'n lid van die Gemeenskapsraad opgedra, moet 'n lid namens die wyk wat hy verteenwoordig die belange van daardie wyk binne die gebied waarvoor die Gemeenskapsraad ingestel is behartig en die inwoners van die betrokke wyk ingelig hou van en adviseer oor aangeleenthede rakende die algemene belang van die persone wat in sodanige wyk of gebied woon.

Bepalings aangaande lede wat belang het by kontrakte met Gemeenskapsraad

120. Geen lid van die Gemeenskapsraad mag òf vir homself òf namens 'n vennootskap waarin hy 'n belang het, betrokke wees by of 'n belang hê in enige transaksie, kontrak of reëling hoegenaamd aangegaan deur of met die Gemeenskapsraad, met uitsondering van die koop en verkoop of verhuur van persele of geboue.

Lid mag nie 'n geldelike belang in aangeleentheid voor vergadering hê nie

121. 'n Lid van die Gemeenskapsraad mag nie by 'n vergadering van die Gemeenskapsraad of 'n komitee daarvan teenwoordig wees nie tydens die bespreking van of stemming oor enige aangeleentheid waarin hy, sy eggenote, sy vennoot, die vennoot van sy eggenote, sy werkgewer (behalwe die Staat) of die werkgewer (behalwe die Staat) van sy eggenote, regstreeks of onregstreeks 'n geldelike belang het.

Betaling van lede

122. Die toelae wat die Minister na oorleg met die Gemeenskapsraad en die Raad bepaal, word aan die lede van die Gemeenskapsraad betaal.

Algemene strafbepaling

123. Iemand wat skuldig bevind word aan 'n misdryf ingevolge hierdie Regulasies is strafbaar met 'n boete van hoogstens R200 of, by wanbetaling, gevangenisstraf vir 'n tydperk van hoogstens ses maande.

Sekere bepalings van toepassing op persone in artikel 3 (6) van die Wet bedoel

124. Die bepalings van regulasies 92 tot en met 96 en 98 tot en met 106 is *mutatis mutandis* van toepassing op 'n persoon in artikel 3 (6) van die Wet bedoel.

ANNEXURE A
COMMUNITY COUNCIL

Nomination of candidate for election of a member of the Community Council for ward .....

We, the undersigned. ....., registered as voters in ward ....., hereby nominate (name of candidate)..... for election as a member of the ..... Community Council for ward .....

Name (to be printed)	Identity document number	Address	Signature
1.			
2.			
3.			
4.			
5.			
6.			
7.			
8.			
9.			
10.			

ACCEPTANCE OF NOMINATION BY CANDIDATE

I,..... Identity document No....., residing at ....., hereby accept nomination for the election described above.

Date..... Candidate's signature

AANHANGSEL A
GEMEENSKAPSRAAD

Nominasie van 'n kandidaat vir verkiesing van 'n lid van die Gemeenskapsraad vir wyk.....

Ons, die ondergetekendes....., wat in wyk .....as kiesers geregistreer is, nomineer hierby (naam van kandidaat) ..... vir verkiesing as lid van die ..... Gemeenskapsraad in wyk .....

Naam (in drukskrif)	Identiteits-dokument-nommer	Adres	Hand-tekening
1.			
2.			
3.			
4.			
5.			
6.			
7.			
8.			
9.			
10.			

AANVAARDING VAN NOMINASIE DEUR KANDIDAAT

Ek, ... Identiteitsdokumentnommer....., wat by..... woon, aanvaar hierby die nominasie vir die verkiesing hierbo beskryf.

Datum..... Kandidaat se handtekening

ANNEXURE B
COMMUNITY COUNCIL
APPOINTMENT OF AGENT

This is to certify that I have appointed..... Identity document No.....), of (address)..... to be my agent to attend on my behalf at polling station ..... in ward..... /the counting of votes on/during the period.....

Candidate.....

(Identity document No.....)

Address of candidate.....

Date.....

AANHANGSEL B
GEMEENSKAPSRAAD
AANSTELLING VAN AGENT

Hierby word gesertifiseer dat ek..... (Identiteitsdokumentnommer.....), van (adres) ..... aangestel het as agent om namens my teenwoordig te wees by stemburo..... in wyk..... /die tel van stemme op/gedurende die tydperk.....

Kandidaat.....

(Identiteitsdokumentnommer.....)

Adres van kandidaat.....

Datum.....

ANNEXURE C
COMMUNITY COUNCIL
DECLARATION OF SECRECY

I, ... do hereby solemnly promise and declare that I will not at the election of members of the ..... Community Council to be held on ..... do anything forbidden by regulation 52 of the ..... which I have read and which I fully understand.

.....
*Electoral Officer
*Presiding Officer
*Polling Officer
*Counting Officer
*Candidate
*Agent
*Witness

Address.....

Date.....

The above declaration was made and subscribed before me at....., this.....day of.....19.....

.....
*Justice of the Peace
*Commissioner of Oaths
*Electoral Officer
*Presiding Officer

* Delete whichever is not applicable.

AANHANGSEL C
GEMEENSKAPSRAAD
VERKLARING VAN GEHEIMHOUDING

Ek, ..., beloof hierby plegtig en verklaar dat ek by die verkiesing van lede van die.....Gemeenskapsraad wat op.....gehou word, niks sal doen nie wat by regulasie 52 van die.....verbode is, wat ek gelees het en volkome begryp.

.....
*Verkiesingsbeampte
*Voorsittende beampte
*Stemopnemer
*Telbeampte
*Kandidaat
*Agent
*Getuie

Adres.....

Datum.....

Bostaande verklaring is voor my afgelê en onderteken te.....op hede die. .....dag van.....19.....

.....
*Vrederegter
*Kommissaris van Ede
*Verkiesingsbeampte
*Voorsittende beampte

* Skrap wat nie van toepassing is nie.

University of Fort Hare
Together in Excellence

ANNEXURE D

FORM OF FRONT OF BALLOT PAPER

TEENBLAD
COUNTERFOIL

No.....

Gemeenskapsraadsverkiesing

Community Council Election

Wyk
Ward.....

Datum
Date.....

Volgnommer van kieser

Serial No. of voter

.....

Stem slegs vir een kandidaat.

Stem deur 'n X te maak in die vierkant teenoor die naam van die kandidaat vir wie u wil stem.

Vote for one candidate only.

Record your vote by placing an X in the square opposite the name of the candidate for whom you wish to vote.

FORM OF BACK OF BALLOT PAPER

Amptelike merk

Official mark

Verkiesing van 'n lid van die Gemeenskapsraad
Election of a member of the.....Community Council
vir die wyk
for the ward of.....
Datum
Date.....

ANNEXURE E

BALLOT PAPER RETURN

Election of a member of the.....Community Council for ward.....held on.....
Polling station.....

Ballot papers received	Number	Ballot papers accounted for	Number
Ballot papers: Nos..... to..... inclusive		Ballot papers in ballot box.....	
		Unused ballot papers: Nos..... to..... inclusive	
		Spoiled ballot papers	
		Tendered ballot papers	
Total number received		Total number accounted for.....	

I hereby certify that the above is a correct return of all the ballot papers supplied to me.

Dated this.....day of.....19.....

Place.....

.....
Presiding Officer

ANNEXURE F

LABEL

Election of a member of the.....Community Council for ward.....
Contents.....
Date of poll.....

.....
*Presiding Officer
*Electoral Officer

* Delete whichever is not applicable.

AANHANGSEL D

VORM VAN VOORKANT VAN STEMBRIEFIE

TEENBLAD
COUNTERFOIL

No.....

Gemeenskapsraadverkiesing

Community Council Election

Wyk
Ward.....

Datum
Date.....

Volgnommer van kieser

Serial No. of voter

.....

Stem slegs vir een kandidaat.

Stem deur 'n X te maak in die vierkant teenoor die naam van die kandidaat vir wie u wil stem.

Vote for one candidate only.

Record your vote by placing an X in the square opposite the name of the candidate for whom you wish to vote.

VORM VAN AGTERKANT VAN STEMBRIEFIE

Amptelike merk

Official mark

Verkiesing van 'n lid van die Gemeenskapsraad
Election of a member of the.....Community Council
vir die wyk
for the ward of.....
Datum
Date.....

AANHANGSEL E

STEMBRIEFOPGAWE

Verkiesing van 'n lid van die.....
Gemeenskapsraad vir wyk.....gehou op.....
Stemburo.....

Stembriewe ontvang	Getal	Verantwoorde stembriewe	Getal
Stembriewe: No.'s..... tot en met.....		Stembriewe in stembus.....	
		Ongebruikte stembriewe: No.'s..... tot en met.....	
		Bedorwe stembriewe	
		Aangebode stembriewe.....	
Totale getal ontvang		Totale getal verantwoord.....	

Ek verklaar hierby dat bostaande 'n juiste opgawe is van alle stembriewe aan my verskaf.

Gedateer op hede die.....dag van.....19.....

Plek.....

.....
Voorsitterde beampte

AANHANGSEL F

ETIKET

Verkiesing van 'n lid van die.....Gemeenskapsraad vir wyk.....
Inhoud.....
Datum van stemming.....

.....
*Voorsitterde beampte
*Verkiesingsbeampte

* Skrap wat nie van toepassing is nie.

University of Fort Hare
Together in Excellence

FLORA OF SOUTHERN AFRICA

A taxonomic treatment of the flora of the Republic of South Africa, Lesotho, Swaziland and South West Africa. To be completed in 33 volumes, not in numerical sequence.

Now available:

Vol. 26 (1963): Price R4,60. Other countries R5,75, post free.

Vol. 1 (1966): Price R1,75. Other countries R2,20, post free.

Vol. 13 (1970): Price R10. Other countries R12, post free.

Vol. 16 Part 1 (1975): Price R13,50. Other countries R16,75, post free.
Part 2 (1977): Price R16. Other countries R20, post free.

Vol. 22 (1976): Price R8,60. Other countries R10,75, post free.

Vol. 9 (1978): Price R4,25. Other countries R5,30, post free.

Obtainable from the Director, Division of Agricultural Information, Private Bag X144, Pretoria.

Sales tax must accompany inland orders.

FLORA VAN SUIDELIKE AFRIKA

'n Taksonomiese behandeling van die flora van die Republiek van Suid-Afrika, Lesotho, Swaziland en Suidwes-Afrika. Sal bestaan uit 33 volumes, nie in numeriese volgorde nie.

Reeds beskikbaar:

Vol. 26 (1963): Prys R4,60. Buitelands R5,75, posvry.

Vol. 1 (1966): Prys R1,75. Buitelands R2,20, posvry.

Vol. 13 (1970): Prys R10. Buitelands R12, posvry.

Vol. 16 Deel 1 (1975): Prys R13,50. Buitelands R16,75, posvry.
Deel 2 (1977): Prys R16. Buitelands R20, posvry.

Vol. 22 (1976): Prys R8,60. Buitelands R10,75, posvry.

Vol. 9 (1978): Prys R4,25. Buitelands R5,30, posvry.

Verkrygbaar van die Direkteur, Afdeling Landbou-inligting, Privaatsak X144, Pretoria.

Verkoopbelasting moet by binnelandse bestellings ingesluit word.

University of Fort Hare
Together in Excellence

THE ONDERSTEPOORT JOURNAL OF VETERINARY RESEARCH

The Onderstepoort Journal of Veterinary Research is printed by the Government Printer, Pretoria, and is obtainable from the Director, Division of Agricultural Information, Department of Agricultural Technical Services, Private Bag X144, Pretoria, 0001, to whom all communications should be addressed.

This publication is a continuation of the Reports of the Government Veterinary Bacteriologist of the Transvaal which date back to 1903 and of which 18 have appeared up to 1932. These were followed by 40 volumes of the Onderstepoort Journal. At present each volume comprises four numbers which are obtainable at R2, other countries R2,50 per number from the above address.

Directors of laboratories etc. desiring to exchange publications are invited to communicate with the Director, Veterinary Research Institute, P.O. Onderstepoort, 0110, Republic of South Africa.

Sales tax must accompany inland orders.

THE ONDERSTEPOORT JOURNAL OF VETERINARY RESEARCH

Die "Onderstepoort Journal of Veterinary Research" word deur die Staatsdrukker, Pretoria, gedruk en is verkrygbaar van die Direkteur, Afdeling Landbou-inligting, Departement van Landbou-tegniese Dienste, Privaatsak X144, Pretoria, 0001, aan wie ook alle navrae in verband met die tydskrif gerig moet word.

Hierdie publikasie is 'n voortsetting van die "Reports of the Government Veterinary Bacteriologist of the Transvaal" wat terugdateer tot 1903 en waarvan 18 verskyn het tot 1932. Dit is gevolg deur 40 volumes van die "Onderstepoort Journal". Tans bestaan elke volume uit vier nommers wat teen R2 binnelands en R2,50 buitelands per nommer van bogenoemde adres verkrygbaar is.

Direkteure van laboratoriums ens. wat begerig is om publikasies om te ruil moet in verbinding tree met die Direkteur, Navorsings-instituut vir Veeartsenykunde, Pk. Onderstepoort, 0110, Republiek van Suid-Afrika.

Verkoopbelasting moet by binnelandse bestellings ingesluit word.

CONTENTS

No.		Page No.	Gazette No.
Co-operation and Development, Department of			
Goverment Notices			
R. 1765	Community Council's Act (125/1977): Establishment: Wattville	1	7203
R. 1766	do.: Regulations: Wattville	1	7203
R. 1767	do.: Establishment: Davel	31	7203
R. 1768	do.: Regulations: Davel	32	7203

INHOUD

No.		Bladsy No.	Staatskoerant No.
Samewerking en Ontwikkeling, Departement van			
Goewermentskennisgewings			
R. 1765	Wet op Gemeenskaparade (125/1977): Instelling: Wattville	1	7203
R. 1766	do.: Regulasies: Wattville	1	7203
R. 1767	do.: Instelling: Davel	31	7203
R. 1768	do.: Regulasies: Davel	32	7203

University of Fort Hare
Together in Excellence

7204
University of Fort Hare
Together in Excellence

REPUBLIC OF SOUTH AFRICA

GOVERNMENT GAZETTE

STAATSKOERANT

VAN DIE REPUBLIEK VAN SUID-AFRIKA

REGULATION GAZETTE No. 3063 — PRICE + 1c GST 20c PRYS + 1c AVB — REGULASIEKOERANT No. 3063

Registered at the Post Office as a Newspaper — ABROAD 30c BUITELANDS — *As 'n Nuusblad by die Poskantoor Geregistreer*

POST FREE · POSVRY

VOL. 182] PRETORIA, 29 AUGUST AUGUSTUS 1980 [No. 7204

GOVERNMENT NOTICES

DEPARTMENT OF CO-OPERATION AND DEVELOPMENT

No. R. 1769 — 29 August 1980

ESTABLISHMENT OF A COMMUNITY COUNCIL FOR THE URBAN RESIDENTIAL AREA OF TWEELING.

I, George de Villiers Morrison, Deputy Minister of Co-operation, hereby establish, on behalf of the Minister of Co-operation and Development by virtue of the powers vested in him by section 2 (1) of the Community Council's Act, 1977 (Act 125 of 1977), a community council for the urban residential area defined in the Schedule hereto.

G. DE V. MORRISON, Deputy Minister of Co-operation.

(File A2/14/2/T31)

SCHEDULE

Urban residential area	*Defined in Government Notice*
Tweeling.....	541 of 22 March 1929.

No. R. 1770 — 29 August 1980

REGULATIONS GOVERNING THE COMMUNITY COUNCIL OF TWEELING

I, George de Villiers Morrison, Deputy Minister of Co-operation, on behalf of and by direction of the Minister of Co-operation and Development, by virtue of the powers vested in him by section 11 (1) of the Community Council's Act, 1977 (Act 125 of 1977), hereby, make the regulations contained in the accompanying Schedule.

G. DE V. MORRISON, Deputy Minister of Co-operation.

(File A2/14/2/T31)

GOEWERMENTSKENNISGEWINGS

DEPARTEMENT VAN SAMEWERKING EN ONTWIKKELING

No. R. 1769 — 29 Augustus 1980

INSTELLING VAN 'N GEMEENSKAPSRAAD VIR DIE STEDELIKE WOONGEBIED VAN TWEELING

Ek, George de Villiers Morrison, Adjunk-minister van Samewerking, stel hierby, namens die Minister van Samewerking en Ontwikkeling, kragtens die bevoegdheid hom verleen by artikel 2 (1) van die Wet op Gemeenskapsrade, 1977 (Wet 125 van 1977), 'n gemeenskapsraad in vir die stedelike woongebied omskryf in die Bylae hiervan.

G. DE V. MORRISON, Adjunk-minister van Samewerking.

(Lêer A2/14/2/T31)

BYLAE

Stedelike woongebied	*Omskryf by Goewermentskennisgewing*
Tweeling.....	541 van 22 Maart 1929.

No. R. 1770 — 29 Augustus 1980

REGULASIES BETREFFENDE DIE GEMEENSKAPSRAAD VAN TWEELING

Ek, George de Villiers Morrison, Adjunk-minister van Samewerking, vaardig hierby, namens en in opdrag van die Minister van Samewerking en Ontwikkeling, kragtens die bevoegdheid hom verleen by artikel 11 (1) van die Wet op Gemeenskapsrade, 1977 (Wet 125 van 1977), die regulasies uit wat in die bygaande Bylae vervat is.

G. DE V. MORRISON, Adjunk-minister van Samewerking.

(Lêer A2/14/2/T31)

University of Pretoria
Together in Excellence

SCHEDULE

CHAPTER 1

DEFINITIONS

1. In these Regulations, unless the context otherwise indicates—

"agent" means an agent appointed under regulation 23;

"Board" means the Oranje-Vaal Administration Board established by section 2 (1) of the Black Affairs Administration Act, 1971 (Act 45 of 1971), read with Government Notices R. 1445 of 1972 and R. 630 of 1979;

"Chief Director" means the Chief Director of the Board;

"Commissioner" means the person appointed Commissioner, Tweeling, under section 2 (2) of the Black Administration Act, 1927 (Act 38 of 1927);

"committee" means any committee of the Community Council appointed under section 5 (1) (k) of the Act;

"Community Council" means the Tweeling Community Council established under section 2 (1) of the Act and "Council" has a corresponding meaning;

"corrupt practice" means any of the offences of treating, undue influence, bribery and personation;

"electoral officer" means the electoral officer referred to in regulation 15 and includes an assistant electoral officer;

"identity document" means a reference book referred to in the Black (Abolition of Passes and Co-ordination of Documents) Act, 1952 (Act 67 of 1952), and a passport, permit, document of identity or other travel document referred to in the Admission of Persons to the Republic Regulation Act, 1972 (Act 59 of 1972);

"illegal practice" means any of the offences created by regulations 58, 59 and 60;

"member" means a member of the Community Council;

"registered occupier" means a person over the age of 18 years to whom a site, residential, hostel or lodger's permit or certificate of occupation has been issued in terms of the Regulations contained in the Schedule to Government Notice R. 1036 of 1968, any person over the age of 18 years to whom the township manager has issued a permit permitting him to occupy any approved dwelling on any church, school or institutional site and the person over the age of 18 years whose name appears on such permit or certificate as well as any child of such permit or certificate holder over the age of 18 years who lawfully resides continuously with such permit or certificate holder;

"Secretary of the Community Council" means the person appointed or employed as such by the Community Council under section 5 (1) (i) of the Act;

"the Act" means the Community Council's Act, 1977 (Act 125 of 1977);

"the principal Act" means the Black (Urban Areas) Consolidation Act, 1945 (Act 25 of 1945);

"township manager" means any officer appointed in terms of section 22 of the principal Act and licensed under Government Notice 552 of 1958 to manage the urban residential area for which the Community Council has been established and includes the duly appointed and licensed deputy and assistant of such officer;

BYLAE

HOOFSTUK 1

WOORDOMSKRYWING

1. In hierdie Regulasies, tensy uit die samehang anders blyk, beteken—

"agent" 'n agent aangestel kragtens regulasie 23;

"die Hoofwet" die Swartes (Stadsgebiede) Konsolidasiewet, 1945 (Wet 25 van 1945);

"die Wet" die Wet op Gemeenskapsrade, 1977 (Wet 125 van 1977);

"dorpsbestuurder" enige beampte aangewys kragtens artikel 22 van die Hoofwet en gelisensieer kragtens Goewermentskennisgewing 552 van 1958 om die stedelike woongebied waarvoor die Gemeenskapsraad ingestel is, te bestuur, asook die behoorlike aangestelde en gelisensieerde adjunk en assistent van sodanige beampte;

"Gemeenskapsraad" die Tweelingse Gemeenskapsraad ingestel kragtens artikel 2 (1) van die Wet;

"geregistreerde bewoner" 'n persoon bo die ouderdom van 18 jaar aan wie 'n perseel-, woon-, tehuis- of loseerderspermit of 'n sertifikaat van bewoning kragtens die Regulasies vervat in die Bylae van Goewermentskennisgewing R. 1036 van 1968 uitgereik is, 'n persoon bo die ouderdom van 18 jaar aan wie die dorpsbestuurder 'n permit uitgereik het om 'n goedgekeurde woning op 'n kerk-, skool- of inrigtingsterrein te bewoon en die persoon bo die ouderdom van 18 jaar wie se naam op sodanige permit of sertifikaat verskyn, asook enige kind bo die ouderdom van 18 jaar van sodanige permit- of sertifikaathouer wat wettiglik, onafgebroke by sodanige permit- of sertifikaathouer inwoon;

"Hoofdirekteur" die Hoofdirekteur van die Raad;

"identiteitsdokument" 'n bewysboek in die Swartes (Afskaffing van Passe en Koördinering van Dokumente) Wet, 1952 (Wet 67 van 1952), bedoel en 'n paspoort, permit, identifikasiebewys of ander reisdokument in die Wet op die Reëling van die Toelating van Persone tot die Republiek, 1972 (Wet 59 van 1972), bedoel;

"kieser" iemand wat ingevolge regulasie 3 bevoeg is om by 'n verkiesing van verkose lede van die Gemeenskapsraad te stem en wie se naam op 'n kieserslys in regulasie 4 bedoel, voorkom;

"komitee" 'n komitee van die Gemeenskapsraad aangestel kragtens artikel 5 (1) (k) van die Wet;

"Kommissaris" die persoon aangestel as Kommissaris, Tweeling, kragtens artikel 2 (2) van die Swart Administrasie Wet, 1927 (Wet 38 van 1927);

"korrupte bedrywigheid" enige van die misdrywe van trakteerdery, onbehoorlike beïnvloeding, omkopery en uitgee vir 'n ander;

"lid" 'n lid van die Gemeenskapsraad;

"onwettige bedrywigheid" enige van die misdrywe geskep deur regulasies 58, 59 en 60;

"Raad" die Oranje-Vaal Administrasieraad ingestel by artikel 2 (1) van die Wet op Administrasie van Swart Sake, 1971 (Wet 45 van 1971), saamgelees met Goewermentskennisgewings R. 1445 van 1972 en R. 630 van 1979;

"Sekretaris van die Gemeenskapsraad" die persoon wat kragtens artikel 5 (1) (i) van die Wet as sodanig deur die Gemeenskapsraad aangestel of in diens van die Gemeenskapsraad is;

"voter" means any person who is qualified to vote at any election of elected members of the Community Council in terms of regulation 3 and whose name appears on any voters' list referred to in regulation 4.

CHAPTER 2

DELIMITATION

Delimitation of wards

2. (1) The Board shall divide the area for which the Community Council has been established into four wards.

(2) Such division shall be made within one month after the date of publication of these Regulations and thereafter at intervals of not less than five years and not more than 10 years commencing from the last delimitation of wards.

(3) Details of such division shall be made available for inspection at the office of the township manager.

CHAPTER 3

VOTERS AND VOTERS' LISTS

Qualification of voters

3. Only persons who are citizens of the Republic of South Africa or any territory which previously formed part of the Republic and who are registered occupiers within the area for which the Community Council has been established and whose names appear on the voters' list, shall be qualified to vote at any election of elected members of the Community Council.

Voters' lists

4. (1) Within two months of the delimitation of wards under regulation 2, the electoral officer shall prepare for each ward a list of persons who are entitled to vote.

(2) The lists prepared after any such delimitation of wards shall come into operation immediately after they have been so prepared by the electoral officer.

(3) Until the coming into operation of the voters' lists prepared after the delimitation of wards, the current voters' lists shall continue to be valid, but thereafter the lists prepared after such delimitation shall be the voters' lists for the respective wards.

(4) The voters' lists prepared for the various wards after any delimitation of wards shall be—

(a) supplemented by the insertion therein of the names of voters whose names do not appear therein and who have satisfied the electoral officer that they are qualified to have their names inserted therein; and

(b) further adjusted by the deletion of the name of any person who is dead or no longer qualifies for continuance of registration as a voter.

Voters' list in which voter's name is to be entered

5. No person's name shall be entered in a voters' list for any particular ward unless he actually resides in such ward on the date on which his name is so entered in the voters' list.

Particulars to be shown in voters' list

6. A voters' list shall show in respect of every person whose name is included therein—

(a) a serial number;

(b) his surname and immediately thereafter his first names;

"verkiesingsbeampte" die verkiesingsbeampte in regulasie 15 bedoel en ook 'n assistent-verkiesingsbeampte.

HOOFSTUK 2

AFBAKENING

Afbakening van wyke

2. (1) Die Raad verdeel die gebied waarvoor die Gemeenskapsraad ingestel is in vier wyke.

(2) Sodanige verdeling word binne een maand na die datum van publikasie van hierdie Regulasies gedoen en daarna met tussenpose van minstens vyf jaar en hoogstens 10 jaar, gereken van die jongste afbakening van wyke.

(3) Besonderhede van sodanige verdeling word vir inspeksie by die kantoor van die dorpsbestuurder beskikbaar gestel.

HOOFSTUK 3

KIESERS EN KIESERSLYSTE

Kwalifikasie van kiesers

3. Alleenlik burgers van die Republiek van Suid-Afrika of 'n gebied wat voorheen deel van die Republiek uitgemaak het en wat geregistreerde bewoners is binne die gebied waarvoor die Gemeenskapsraad ingestel is en wie se name op die kieserslys verskyn, kwalifiseer om by 'n verkiesing van gekose lede van die Gemeenskapsraad te stem.

Kieserslyste

4. (1) Binne twee maande na die afbakening van wyke kragtens regulasie 2 moet die verkiesingsbeampte 'n lys van persone wat geregtig is om te stem, vir elke wyk opstel.

(2) Die lyste wat na sodanige afbakening van wyke opgestel is, tree in werking onmiddellik nadat dit aldus deur die verkiesingsbeampte opgestel is.

(3) Die lopende kieserslyste bly van krag tot dat die kieserslyste wat na die afbakening van wyke opgestel is in werking tree, en daarna is die lyste wat na sodanige afbakening opgestel is, die kieserslyste vir die onderskeie wyke.

(4) Die kieserslyste wat na 'n afbakening van wyke vir die verskillende wyke opgestel is, word—

(a) aangevul deur die opname daarin van die name van kiesers wie se name nie daarin verskyn nie en wat die verkiesingsbeampte daarvan oortuig dat hulle kwalifiseer vir die opname van hul name daarin; en

(b) verder aangepas deur die skrapping daarin van die name van kiesers wat oorlede is of nie langer bevoeg is om as 'n kieser geregistreer te wees nie.

Kieserslys waarin kiesersnaam ingeskryf moet word

5. Geen persoon se naam word in 'n kieserslys vir 'n besondere wyk ingeskryf nie tensy hy inderdaad in sodanige wyk woon op die datum waarop sy naam aldus in die kieserslys ingeskryf word.

Besonderhede wat op 'n kieserslys aangegee moet word

6. Op 'n kieserslys moet ten aansien van iedere persoon wie se naam daarin opgeneem is, aangegee word—

(a) 'n volgnommer;

(b) sy van en onmiddellik daarna sy voorname;

University of Fort Hare

(c) his residential address; and
(d) his identity document number;

in order of house numbers and, in the case of persons resident in hostels, all surnames shall be in alphabetical order.

Permanent change in the place of residence of voter

7. (1) Whenever there has been a permanent change in the place of residence of a voter, he shall forthwith notify the electoral officer of the change.

(2) On receipt of any such notification the electoral officer shall amend the voters' list or lists as circumstances may require.

List of insertions

8. On the first day of every month the electoral officer shall prepare in respect of each ward, a list of insertions, *mutatis mutandis* in the form prescribed in regulation 6 in respect of a voters' list, showing the names inserted in terms of regulations 4 (4) (a) and 7 (2) in the voters' list for the ward in question during the immediately preceding month.

Amendment of voters' list by electoral officer

9. (1) Subject to the provisions of subregulations (2) and (3), the electoral officer shall, if he is satisfied as to the relative facts, amend the voters' list for any ward by—

(a) correcting any mistake, supplying any omission or recording any change in the particulars of the registration of any person;

(b) after ascertaining by virtue of the provisions of regulation 7 that a person has ceased to be permanently resident in the ward in which he is registered as a voter, transferring his name to the list in respect of the ward to which he has moved, or, in the case of a person who has left the area for which the Community Council has been established, removing his name from the list;

(c) removing the name of any person who is dead or no longer qualifies for continuance of registration as a voter;

(d) removing any superfluous entry where the name of the same person appears more than once in the same voters' list or in voters' lists for more than one ward.

(2) Before removing the name of any person from the voters' list, or adding it thereto, the electoral officer shall, by such means as are practicable, satisfy himself that the name relates to the person concerned.

(3) The electoral officer shall cause a copy of a list containing the names of persons who no longer qualify for continuance of registration as voters and whose names were removed from the voters' list during any month, to be displayed on the notice board at the township manager's office for a period of at least 30 days commencing not later than the 20th day of the next ensuing month.

When voters' lists to be printed

10. (1) The voters' lists as prepared and supplemented and further adjusted from time to time in accordance with the provisions of these Regulations, shall be printed, subject to the provisions of subregulation (2), not later than one month before an election referred to in regulation 19, and at such other times as the electoral officer considers necessary.

(2) The voters' lists printed for the purposes of an election referred to in subregulation (1) shall be the voters' lists for the wards in question as supplemented

(c) sy woonadres; en
(d) sy identiteitsdokumentnommer;

in volgorde van huisnommers, en in die geval van persone woonagtig in tehuise, moet alle vanne in alfabetiese volgorde wees.

Permanente verandering in verblyfplek van kieser

7. (1) Wanneer daar 'n permanente verandering plaasvind in die verblyfplek van 'n kieser, stel hy onverwyld die verkiesingsbeampte in kennis van die verandering.

(2) By ontvangs van so 'n kennisgewing, wysig die verkiesingsbeampte die kieserslys of -lyste, na gelang van die omstandighede.

Lys van opnames

8. Die verkiesingsbeampte stel op die eerste dag van elke maand ten opsigte van elke wyk 'n lys van opnames op, *mutatis mutandis* in die vorm in regulasie 6 ten opsigte van 'n kieserslys voorgeskryf, waarin die name wat gedurende die onmiddellik voorafgaande maand ingevolge regulasies 4 (4) (a) en 7 (2) in die kieserslys vir die betrokke wyk opgeneem is.

Wysiging van kieserslys deur verkiesingsbeampte

9. (1) Behoudens die bepalings van subregulasies (2) en (3), wysig die verkiesingsbeampte, indien hy oortuig is ten opsigte van die feite wat ter sake is, die kieserslys vir 'n wyk deur—

(a) 'n fout in die besonderhede van die registrasie van 'n persoon te verbeter, 'n weglating daarin aan te vul of 'n verandering daarin aan te teken;

(b) na vasstelling uit kragte van die bepalings van regulasie 7 dat 'n persoon opgehou het om permanent in die wyk waarin hy as 'n kieser geregistreer is te woon, sy naam oor te plaas na die lys ten opsigte van die wyk waarheen hy verhuis het of, in die geval van 'n persoon wat die gebied waarvoor die Gemeenskapsraad ingestel is verlaat het, sy naam van die lys te verwyder;

(c) die naam van 'n persoon wat oorlede is of onbevoeg is om as kieser geregistreer te bly, te verwyder;

(d) 'n oortollige inskrywing te verwyder, waar die naam van dieselfde persoon meer as een maal in dieselfde kieserslys of in kieserslyste vir meer as een wyk voorkom.

(2) Alvorens die naam van 'n persoon uit die kieserslys te verwyder of dit daarin by te voeg, vergewis die verkiesingsbeampte hom deur sodanige middele as wat uitvoerbaar is, daarvan dat die naam op die betrokke persoon betrekking het.

(3) Die verkiesingsbeampte laat 'n afskrif van 'n lys bevattende die name van persone wat onbevoeg is om as kiesers geregistreer te bly en wie se name gedurende enige maand van die kieserslys verwyder is, op die aanplakbord by die dorpsbestuurder se kantoor vertoon vir 'n tydperk van minstens 30 dae beginnende voor of op die 20ste dag van die daaropvolgende maand.

Wanneer kieserslyste gedruk moet word

10. (1) Die kieserslyste, soos ooreenkomstig die bepalings van hierdie Regulasies opgestel en van tyd tot tyd aangevul en verder aangepas, word, behoudens die bepalings van subregulasie (2), gedruk uiterlik een maand voor 'n verkiesing in regulasie 19 bedoel, en op die ander tye wat die verkiesingsbeampte nodig ag.

(2) Die kieserslyste wat vir die doeleindes van 'n verkiesing in subregulasie (1) bedoel, gedruk word, is die kieserslyste vir die betrokke wyke soos van tyd tot

and further adjusted from time to time up to and including the last day of the month preceding the month in which the notice referred to in regulation 19 is issued.

(3) A voters' list printed for the purposes of an election referred to in subregulation (1), shall not be amended and shall prior to such election be made available for inspection for a period of at least 14 days at the office of the township manager within whose area of jurisdiction the ward is situated.

Voters' lists not invalidated by reason of errors

11. If through accident, inadvertence or oversight, anything required by law to be done in the preparation of any voters' list is erroneously done or omitted to be done, the voters' list shall not be invalidated thereby and the electoral officer may take or cause to be taken such steps as are necessary to rectify the error or omission.

CHAPTER 4

QUALIFICATIONS

12. Subject to the provisions of section 3 (5) of the Act, no person shall be qualified to be or remain a member of the Community Council if he—

(a) is not a registered occupier in the area for which the Community Council has been established;

(b) is not a voter;

(c) is in arrears for more than two months with any charges, fees or other dues payable by him to the Board or the Community Council on the day when nominations of candidates for the election of members of the Community Council close;

(d) has, within the period of three years immediately preceding the date of his nomination for election, been convicted of any offence in respect of which he has been sentenced to imprisonment without the option of a fine for a period of more than six months;

(e) is being detained as mentally disordered or defective under the Mental Disorders Act, 1916 (Act 38 of 1916), or the Mental Health Act, 1973 (Act 18 of 1973);

(f) is an employee of the Community Council;

(g) is prohibited in terms of section 2 (4) of the Riotous Assemblies Act, 1956 (Act 17 of 1956), from attending gatherings, and particulars of the notice addressed to him under the said section 2 (4) have been published in the *Government Gazette* in terms of section 2 (5) of the said Act;

(h) is prohibited in terms of section 5 (1) (e) or section 9 (1) of the Internal Security Act, 1950 (Act 44 of 1950), from attending gatherings;

(i) is a person whose name appears on a list compiled in terms of the provisions of section 4 (10) of the Internal Security Act, 1950 (Act 44 of 1950), and published in the *Government Gazette* in terms of section 8 (4) of the said Act.

CHAPTER 5

ELECTIONS

General elections

13. A general election of members of the Community Council shall take place not later than six months after the publication of these Regulations and thereafter in every third year during September.

tyd aangevul en verder aangepas tot en met die laaste dag van die maand wat die maand waarin die in regulasie 19 bedoelde kennisgewing uitgevaardig word, voorafgaan.

(3) 'n Kieserslys wat vir die doeleindes van 'n verkiesing in subregulasie (1) bedoel, gedruk is, word nie gewysig nie en word voor sodanige verkiesing vir inspeksie beskikbaar gestel vir 'n tydperk van minstens 14 dae by die kantoor van die dorpsbestuurder binne wie se regsgebied die wyk geleë is.

Kieserslyste nie as gevolg van foute ongeldig nie

11. Indien per ongeluk, per abuis of deur onoplettendheid iets wat regtens by die opstel van 'n kieserlys gedoen moet word, verkeerd gedoen word of nie gedoen word nie, maak dit die kieserslys nie ongeldig nie, en kan die verkiesingsbeampte die stappe doen of laat doen wat nodig is om die fout te verbeter of om die versuim te herstel.

HOOFSTUK 4

KWALIFIKASIES

12. Behoudens die bepalings van artikel 3 (5) van die Wet, is geen persoon bevoeg om lid van die Gemeenskapsraad te wees of te bly nie indien hy—

(a) nie 'n geregistreerde bewoner binne die gebied waarvoor die Gemeenskapsraad ingestel is, is nie;

(b) nie 'n kieser is nie;

(c) op die dag waarop nominasies van kandidate vir die verkiesing van lede van die Gemeenskapsraad sluit, vir meer as twee maande agterstallig is met die betaling van vorderings, gelde of ander bedrae wat deur hom aan die Raad of die Gemeenskapsraad verskuldig is;

(d) binne die tydperk van drie jaar wat die datum van sy nominasie vir verkiesing onmiddellik voorafgaan, skuldig bevind is aan enige misdryf ten opsigte waarvan hy tot gevangenisstraf sonder die keuse van 'n boete vir 'n tydperk van meer as ses maande gevonnis is;

(e) kragtens die Wet op Geestesgebreken, 1916 (Wet 38 van 1916), of die Wet op Geestesgesondheid, 1973 (Wet 18 van 1973), as geestelik gekrenk of gebrekkig aangehou word;

(f) 'n werknemer van die Gemeenskapsraad is;

(g) kragtens artikel 2 (4) van die Wet op Oproerige Byeenkomste, 1956 (Wet 17 van 1956), verbied is om byeenkomste by te woon en besonderhede van die kennisgewing wat kragtens bedoelde artikel 2 (4) aan hom gerig is, kragtens artikel 2 (5) van bedoelde Wet in die *Staatskoerant* afgekondig is;

(h) kragtens artikel 5 (1) (e) of 9 (1) van die Wet op Binnelandse Veiligheid, 1950 (Wet 44 van 1950), verbied is om byeenkomste by te woon;

(i) iemand is wie se naam verskyn op 'n lys, saamgestel kragtens die bepalings van artikel 4 (10) van die Wet op Binnelandse Veiligheid, 1950 (Wet 44 van 1950), en in die *Staatskoerant* kragtens artikel 8 (4) van bedoelde Wet afgekondig is.

HOOFSTUK 5

VERKIESINGS

Algemene verkiesings

13. 'n Algemene verkiesing van lede van die Gemeenskapsraad word gehou uiterlik ses maande nadat hierdie Regulasies bekendgemaak is en daarna driejaarliks gedurende September.

Term of office of members

14. (1) A member elected at a general election or an election held to fill a casual vacancy shall assume office on the date of such election.

(2) A member designated by the Minister under section 3 (2) of the Act shall assume office on a date determined by the Minister.

(3) A member shall, subject to the provisions of regulations 61 and 62, remain in office up to and including the day immediately preceding the next succeeding general election or until the term for which he was designated by the Minister in terms of section 3 (2) of the Act, has expired.

Electoral officer

15. (1) The Commissioner shall appoint, after consultation with the Board, an electoral officer and as many assistant electoral officers as he may deem necessary.

(2) The electoral officer shall be responsible for the conduct of elections of members of the Community Council.

Presiding officer, polling officers, counting officers and witnesses

16. The electoral officer shall appoint in writing a presiding officer and as many polling officers and witnesses as may be necessary for effectually taking poll at every polling station and he shall appoint as many counting officers as may be necessary for the counting of votes after the close of the poll.

Polling stations

17. There shall be polling stations at such place or places as the electoral officer deems necessary.

Members to be elected

18. The number of members determined by the Minister under section 3 (1) of the Act shall be elected.

Fixing of nomination and polling dates

19. (1) The electoral officer shall, not later than three months after the date of publication of these Regulations, and thereafter not later than the first day of August of each year in which a general election is to be held, call, in a notice which shall be in both official languages and shall be published in at least one newspaper which generally circulates in the area for which the Community Council has been established and shall be displayed on the notice board at each township manager's office situated in such area, for the nomination of candidates for the election of members of the Community Council.

(2) The notice referred to in subregulation (1) shall specify—

(a) the place at which and the date and time before which nominations shall be received by the electoral officer, which date shall be not less than 14 days and not more than 21 days from the date of first publication of such notice; and

(b) the places at which and the date, other than a Sunday, on which polling shall take place.

Hours of poll

20. The poll shall commence at 07h00 and close at 21h00 on the polling day, but the presiding officer shall permit every voter who is at 21h00 inside the room in which the ballot box is, to record his vote before the closing of the poll.

Ampstermyn van lede

14. (1) 'n Lid verkies in 'n algemene verkiesing of 'n verkiesing gehou om 'n toevallige vakature te vul, aanvaar sy amp op die datum van sodanige verkiesing.

(2) 'n Lid deur die Minister kragtens artikel 3 (2) van die Wet aangewys, aanvaar sy amp op die datum deur die Minister bepaal.

(3) 'n Lid bly, behoudens die bepalings van regulasies 61 en 62, in sy amp aan tot en met die dag wat die eersvolgende algemene verkiesing onmiddellik voorafgaan of totdat die termyn waarvoor hy ingevolge artikel 3 (2) van die Wet deur die Minister aangewys is, verstryk.

Verkiesingsbeampte

15. (1) Die Kommissaris na oorlegpleging met die Raad, stel 'n verkiesingsbeampte en soveel assistent verkiesingsbeamptes as wat hy nodig ag, aan.

(2) Die verkiesingsbeampte is verantwoordelik vir die hou van verkiesings van lede van die Gemeenskapsraad.

Voorsittende beampte, stemopnemers, telbeamptes en getuies

16. Die verkiesingsbeampte stel skriftelik 'n voorsittende beampte en soveel stemopnemers en getuies aan as wat nodig is om die stemming doeltreffend te laat plaasvind by iedere stemburo en stel soveel telbeamptes aan as wat nodig is vir die tel van die stemme na die sluiting van die stemming.

Stemburo's

17. Daar moet stemburo's wees by sodanige plek of plekke as wat die verkiesingsbeampte nodig ag.

Lede wat verkies moet word

18. Die aantal lede deur die Minister kragtens artikel 3 (1) van die Wet bepaal, word verkies.

Bepaling van nominasie- en stemdatums

19. (1) Die verkiesingsbeampte moet binne drie maande na die bekendmaking van hierdie Regulasies en daarna uiters op die eerste dag van Augustus van elke jaar waarin 'n algemene verkiesing gehou staan te word, in 'n kennisgewing, in albei amptelike tale, wat afgekondig word in ten minste een nuusblad wat gewoonlik in die gebied waarvoor die Gemeenskapsraad ingestel is, versprei word en wat op die aanplakbord by elke dorpsbestuurder se kantoor in sodanige gebied geleë vertoon word, om nominasies vra van kandidate vir verkiesing tot lede van die Gemeenskapsraad.

(2) Die kennisgewing in subregulasie (1) bedoel, vermeld—

(a) die plek waar en die datum en tyd tot en met wanneer nominasies deur die verkiesingsbeampte ontvang sal word, welke datum minstens 14 dae en hoogstens 21 dae na die datum van eerste afkondiging van sodanige kennisgewing moet wees; en

(b) die plekke waar en die datum, uitgesonderd 'n Sondag, waarop stemming sal plaasvind.

Ure van stemming

20. Stemming begin om 07h00 en sluit om 21h00 op die dag van stemming, maar die voorsittende beampte laat elke kieser wat om 21h00 binne die kamer waarin die stembus is, sy stem uitbring voor die sluiting van die stemming.

University of Fort Hare
Together in Excellence

Nomination of candidates

21. (1) Nominations of candidates for election as members of the Community Council shall be submitted in writing to the electoral officer in the form contained in Annexure A hereto, which form shall be supplied by the township manager, and shall be supported by the signatures of not less than 10 persons who are registered as voters in the ward for which the nomination is made.

(2) The electoral officer shall as soon as practicable, and not later than 14 days after the date referred to in subregulation (1), affix on the notice board at the office of the township manager a notice containing a list of the candidates duly nominated in terms of these Regulations and shall also declare those candidates who have been returned unopposed to be elected members for their respective wards.

Deposit by or on behalf of persons nominated

22. (1) There shall be deposited by or on behalf of each person nominated as a candidate for election as a member of the Community Council the sum of R15 with the electoral officer on or before the date and time referred to in regulation 19 (2) (a).

(2) If poll takes place and the total number of votes received thereat by any unsuccessful candidate is less than one-fifth of the number of votes received by the successful candidate the sum deposited by or on behalf of such unsuccessful candidate shall be forfeited and shall be paid into the funds of the Community Council.

(3) Save as is in this regulation expressly provided, the sum deposited shall be returned to the depositor.

Candidates and agents

23. (1) Any duly nominated candidate at an election of members of the Community Council may, in the form contained in Annexure B hereto, appoint one or more agents to assist him and shall advise the electoral officer in writing of the name(s) and address(es) of such agent or agents.

(2) The candidates and only one agent per candidate shall be allowed at any particular time to be present inside any polling station or any place where votes are counted.

(3) Any person appointed an agent in terms of subregulation (1) shall produce his letter of appointment to the electoral officer, presiding officer or polling officer, as the case may be, if required to do so.

Provision of equipment

24. (1) For all elections the electoral officer shall arrange for voting compartments, ballot boxes, ballot papers, instruments for marking ballot papers with the official mark and other requirements to be provided and shall do such other acts and make such arrangements to facilitate the taking of the poll as he may deem necessary for effectually conducting the election.

(2) The equipment and requirements in connection with any election shall be supplied by and all expenditure in this connection shall be for the account of the Community Council: Provided that the equipment and requirements in connection with the first election shall be supplied by and all expenditure in connection with such election shall be for the account of the Board.

Nominasie van kandidate

21. (1) Die nominasie van kandidate vir verkiesing tot lede van die Gemeenskapsraad moet skriftelik by die verkiesingsbeampte ingedien word in die vorm in Aanhangsel A hiervan vervat en wat deur die do psbestuurder verskaf word en dit moet gestaaf word deur die handtekeninge van 10 persone wat as kiesers geregistreer is in die wyk ten opsigte waarvan sodanige nominasie geskied.

(2) Die verkiesingsbeampte moet so gou doenlik, en uiters 14 dae na die datum in subregulasie (1) bedoel, 'n kennisgewing met die lys van kandidate wat behoorlik ingevolge hierdie Regulasies genomineer is, op die aanplakbord by die kantoor van die dorpsbestuurder opplak en moet ook dié kandidate wat onbestrede verkies is, tot verkose lede vir hul onderskeie wyke verklaar.

Deposito deur of namens genomineerde persone

22. (1) Daar word op of voor die datum en tyd in regulasie 19 (2) (a) bedoel, deur of ten behoewe van elke persoon wat genomineer is as kandidaat vir verkiesing tot lid van die Gemeenskapsraad die bedrag van R15 by die verkiesingsbeampte gestort.

(2) Indien 'n stemming plaasvind en die totale getal stemme wat daarby op enige verslane kandidaat uitgebring is, minder is as 'n vyfde van die getal stemme van die suksesvolle kandidaat, word die bedrag wat deur of ten behoewe van sodanige verslane kandidaat gestort is, verbeur en in die fondse van die Gemeenskapsraad gestort.

(3) Behoudens die uitdruklike bepalings van hierdie regulasie, word die gestorte bedrag aan die deposant terugbetaal.

Kandidate en agente

23. (1) Enige behoorlik genomineerde kandidaat by 'n verkiesing van lede van die Gemeenskapsraad kan, in die vorm vervat in Aanhangsel B hiervan, een of meer agente aanstel om hom behulpsaam te wees, en hy moet die verkiesingsbeampte skriftelik in kennis stel van die naam (name) en adres(se) van sodanige agent(e).

(2) Die kandidate en slegs een agent per kandidaat word toegelaat om op enige bepaalde tydstip binne enige stemburo of by enige plek waar stemme getel word, teenwoordig te wees.

(3) 'n Persoon wat kragtens subregulasie (1) as agent aangestel is, moet sy aanstellingsbrief toon aan die verkiesingsbeampte, voorsittende beampte of stemopnemer na gelang van die geval, indien dit van hom verlang word.

Verskaffing van uitrusting

24. (1) Die verkiesingsbeampte reël by alle verkiesings dat stemhokkies, stembusse, stembriewe, toestelle om die stembriewe met die amptelike merk te merk en ander benodigdhede verskaf word en doen sodanige ander stappe en tref sodanige reëlings ter vergemakliking van die stemming as wat hy nodig ag ten einde die verkiesing op doeltreffende wyse te kan laat geskied.

(2) Die Gemeenskapsraad verskaf die uitrusting en benodigdhede in verband met 'n verkiesing en alle uitgawes in verband met sodanige verkiesing is vir sy rekening: Met dien verstande dat die Raad die uitrusting en benodigdhede in verband met die eerste verkiesing verskaf en dat alle uitgawe in dié verband vir sy rekening is.

Polling station at which voter shall vote

25. A voter voting in the area of jurisdiction of the Community Council may only vote at a polling station determined by the returning officer by virtue of regulation 17.

Declaration of secrecy

26. (1) The electoral officer and every presiding officer, polling officer, candidate, agent, witness or any other person or official (except a policeman) entitled to attend at a polling station or at the counting of votes shall, before the opening of the poll, and every counting officer shall, before the commencement of the counting of votes, make, in duplicate, in the form contained in Annexure C hereto, a declaration of secrecy under oath before a justice of the peace or a commissioner of oaths, or before the electoral officer or a presiding officer who are hereby authorised to administer such oath.

(2) The original declaration of secrecy shall be handed to the electoral officer by the person who made it, before the opening of the poll or before the commencement of the counting of votes, as the case may be, and such person shall at all times during the polling or the counting of votes have the duplicate of such declaration of secrecy in his possession and shall on demand produce it to the electoral officer or the presiding officer for inspection.

Procedure at ballot

27. The presiding officer, in the presence of such candidates and agents as may be present, shall—

(a) before the commencement of the poll, seal each ballot box, leaving open an opening through which ballot papers may be inserted into the ballot box;

(b) at the closing of the poll, seal the opening referred to in paragraph (a).

Powers of the presiding officer at a polling station

28. (1) The presiding officer shall keep order at a polling station, shall regulate the number of voters to be admitted at any time and shall exclude all other persons except the electoral officer, the candidates or their agents, and policemen and other officials on duty.

(2) Save as is excepted in subregulation (1), the presiding officer may require any person (other than a person recording his vote) to leave the polling station and any person who fails to leave the polling station when so required may be arrested without a warrant on the order of the presiding officer and shall be guilty of an offence.

(3) The powers conferred by this regulation shall not be exercised so as to prevent any voter who is otherwise entitled to vote from having an opportunity of voting at the polling station.

Ballot papers

29. Every ballot paper to be used for voters who wish to vote shall be in both official languages and in the form set out in Annexure D hereto, and there shall be printed or written on every ballot paper in alphabetical order the names of all the duly nominated candidates at the election and their addresses and occupations.

No voter to vote more than once

30. A voter shall, whether or not his name appears on more than one voters' list or more than once on the same voters' list, be entitled to cast at an election one

Stemburo waar kieser moet stem

25. 'n Kieser wat binne die regsgebied van die Gemeenskapsraad stem, kan alleenlik stem by 'n stemburo deur die kiesbeampte ingevolge regulasie 17 bepaal.

Verklaring van geheimhouding

26. (1) Die verkiesingsbeampte en elke voorsittende beampte, stemopnemer, kandidaat, agent, getuie of enige ander persoon of beampte (uitgesonderd 'n polisiebeampte) wat geregtig is om in 'n stemburo of by die tel van stemme teenwoordig te wees, moet voor die aanvang van die stemming, en elke telbeampte moet voor die aanvang van die tel van stemme, in die vorm vervat in Aanhangsel C hiervan, in duplikaat, 'n beëdigde verklaring van geheimhouding aflê voor 'n vrederegter of 'n kommissaris van ede, of voor die verkiesingsbeampte of 'n voorsittende beampte wat hierby gemagtig word om sodanige eed af te neem.

(2) Die oorspronklike verklaring van geheimhouding word aan die verkiesingsbeampte, voor die aanvang van die stemming of die begin van die tel van stemme, na gelang van die geval, deur die persoon wat dit afgelê het, oorhandig en sodanige persoon moet die duplikaat van sodanige verklaring van geheimhouding te alle tye gedurende die stemming of tel van stemme in sy besit hê en moet dit op aandrang aan die verkiesingsbeampte of die voorsittende beampte vir inspeksie toon.

Prosedure by stemming

27. Die voorsittende beampte, in teenwoordigheid van sodanige kandidate en agente as wat teenwoordig is, verseël—

(a) voor die aanvang van die stemming, elke stembus maar laat 'n opening oop waardeur stembriewe in die stembus ingesit kan word;

(b) by die sluiting van die stemming, die opening in paragraaf (a) bedoel.

Bevoegdhede van voorsittende beampte by 'n stemburo

28. (1) Die voorsittende beampte hou orde by 'n stemburo, reël hoeveel kiesers tegelyk binnegelaat word en hou alle ander persone, uitgesonderd die verkiesingsbeampte, die kandidate of hulle agente en polisiebeamptes en ander beamptes op diens, buite.

(2) Behoudens die uitsonderings wat by subregulasie (1) gemaak word, kan die voorsittende beampte enige persoon (uitgesonderd 'n persoon wat sy stem uitbring) aansê om die stemburo te verlaat en enige persoon wat versuim om dit te doen wanneer dit van hom vereis word, begaan 'n misdryf en kan op bevel van die voorsittende beampte sonder lasbrief in hegtenis geneem word.

(3) Die bevoegdhede by hierdie regulasie verleen, word nie so uitgeoefen dat dit 'n kieser wat andersins geregtig is om te stem, verhinder om sy stem by die stemburo uit te bring nie.

Stembriewe

29. Elke stembrief wat gebruik word deur kiesers wat wil stem, moet in albei amptelike tale wees en in die vorm vervat in Aanhangsel D hiervan en op elke stembrief moet die name staan van al die behoorlik genomineerde kandidate by die verkiesing in alfabetiese orde afgedruk of ingeskryf en hul adresse en beroepe.

Geen kieser mag meer as een maal stem nie

30. 'n Kieser is, ongeag of sy naam op meer as een kieserslys of meer as een maal op dieselfde kieserslys voorkom, geregtig om by 'n verkiesing slegs een stem

vote only and no voter shall be entitled to vote unless he has produced to the presiding officer or a polling officer his identity document.

Identification of voters

31. (1) Save as provided in regulation 36, no enquiry shall be made at an election as to the identity of any person or his right to vote, except that the presiding officer may himself, and if required by any candidate or an agent of any candidate shall, after any person has established his identity in the manner contemplated in regulation 30, and before he is allowed to vote, put to him either or both of the following questions, but no other, namely:

(a) Are you the person whose name appears as A.B. on the list of voters in this ward?

(b) Have you already voted at this election in this or any other ward?

(2) Any person who fails to establish his identity in the manner comtemplated in regulation 30 or who does not answer the first question distinctly and absolutely in the affirmative and the second question distinctly and absolutely in the negative, shall not be permitted to vote.

(3) A person who makes a false answer to either of those questions shall be guilty of an offence.

(4) The presiding officer may make enquiry of any other presiding officer at any polling station for the purpose of verifying an answer to either of the two questions referred to in subregulation (1), and may further order the arrest without warrant of any person who is suspected by him on reasonable grounds of making a false answer to either of such questions or of committing the offence of personation as defined in regulation 57.

(5) Every person empowered by law to make arrests shall carry out such an order of the presiding officer.

Manner of voting

32. (1) The voting at all elections held in terms of the provisions of these Regulations shall be by secret ballot.

(2) Every person who wishes to vote shall apply to the presiding officer or a polling officer for a ballot paper and such officer shall, if he is satisfied that such person is entitled to vote in the ward concerned and after determining that no ballot paper has already been issued at that polling station to that person at such election, he shall—

(a) call out the serial number and name of the voter as it appears on the voters' list;

(b) enter the serial number in the appropriate space on the counterfoil of the ballot paper that is to be issued to the voter;

(c) tear out the ballot paper and stamp the official mark on the back thereof in the space provided;

(d) fold the ballot paper so that the front thereof is on the inside and the official mark is on the outside and hand it to the applicant; and

(e) on the voters' list, draw a line through the serial number, identity document number and name of the voter as proof that a ballot paper has been issued.

(3) When the voter has received such ballot paper he shall take it to the compartment provided for that purpose and signify for whom he desires to vote by secretly placing a cross opposite the name of the candidate for whom he wishes to vote. He shall then fold the ballot paper so that the official mark can be seen

uit te bring, en geen kieser is geregtig om te stem nie tensy hy sy identiteitsdokument [illegible] die voorsittende beampte of 'n stemopnemer oorlê.

Identifikasie van kiesers

31. (1) Behoudens soos by regulasie 36 bepaal, word by 'n verkiesing geen navraag gedoen omtrent enige persoon se identiteit of sy reg om te stem nie, behalwe dat die voorsittende beampte nadat iemand sy identiteit op die wyse in regulasie 30 beoog, bewys het, en voordat hy toegelaat word om te stem, hom een van of albei die volgende vrae, en geen ander nie, uit eie beweging kan, en op versoek van 'n kandidaat of 'n agent van 'n kandidaat moet, stel, naamlik:

(a) Is u die persoon wie se naam as A.B. op die kieserslys van hierdie wyk voorkom?

(b) Het u reeds in hierdie verkiesing of in 'n ander wyk gestem?

(2) Iemand wat versuim om sy identiteit op die wyse in regulasie 30 beoog, te bewys, of wat nie die eerste vraag duidelik en sonder voorbehoud bevestigend en die tweede duidelik en sonder voorbehoud ontkennend beantwoord nie, word nie toegelaat om te stem nie.

(3) Iemand wat op enigeen van daardie vrae 'n valse antwoord gee, is aan 'n misdryf skuldig.

(4) Die voorsittende beampte kan by 'n ander voorsittende beampte by enige stemburo navraag doen ten einde die waarheid van 'n antwoord op enigeen van die vrae in subregulasie (1) bedoel te toets en kan verder beveel dat enigiemand wat hy op redelike gronde verdink daarvan dat hy op enigeen van bedoelde vrae 'n valse antwoord gegee het, of hom skuldig maak aan die misdryf om hom vir 'n ander uit te gee, soos in regulasie 57 omskryf, sonder lasbrief in hegtenis geneem word.

(5) Iedereen wat regtens bevoeg is tot inhegtenisneming, voer so 'n bevel van die voorsittende beampte uit.

Wyse waarop gestem word

32. (1) Die stemming by alle verkiesings wat kragtens die bepalings van hierdie Regulasies gehou word, geskied by geheime stemming.

(2) Elke persoon wat wil stem, doen aansoek om 'n stembrief by die voorsittende beampte of 'n stemopnemer en sodanige beampte of stemopnemer, indien hy oortuig is dat sodanige persoon geregtig is om in die betrokke wyk te stem en nadat hy vasgestel het dat geen stembrief reeds aan daardie persoon by daardie stemburo by sodanige verkiesing uitgereik is nie, moet hy—

(a) die volgnommer en naam van die kieser soos dit op die kieserslys voorkom, uitroep;

(b) die volgnommer in die toepaslike ruimte op die teenblad van die stembrief wat aan die kieser uitgereik gaan word, inskryf;

(c) die stembrief uitskeur en dit op die keersy in die ruimte voorsien met die amptelike merk, merk;

(d) die stembrief vou sodat die voorkant daarvan aan die binnekant en die amptelike merk aan die buitekant is en dit aan die kieser oorhandig; en

(e) op die kieserslys 'n streep trek deur die volgnommer, identiteitsdokumentnommer en naam van die kieser, as bewys dat 'n stembrief uitgereik is.

(3) Wanneer die kieser sodanige stembrief ontvang, neem hy dit na die stemhokkie wat vir dié doel verskaf is en dui aan vir wie hy stem deur in die geheim 'n kruisie teenoor die naam van die kandidaat vir wie hy wil stem, aan te bring. Hy vou dan die stembrief sodat

and having held up the ballot paper so that the presiding officer or polling officer can recognise the official mark, shall drop the ballot paper in the ballot box placed in front of the presiding officer or polling officer.

(4) If the ballot paper that is about to be dropped into the ballot box has inadvertently not been marked with the official mark, the presiding officer or polling officer may cause such ballot paper to be so marked.

(5) If the presiding officer or polling officer has any reason to doubt that a ballot paper in the possession of a voter is the ballot paper issued to him, he may, for the purpose of comparing the numbers printed on the ballot paper and the counterfoil, request the voter to show him the number and official mark appearing on the back of the ballot paper and the voter shall do so.

(6) The voter shall vote without undue delay and shall leave the polling station as soon as he has put his ballot paper into the ballot box.

Voters who are unable to vote in the manner prescribed

33. (1) Any voter who is unable to vote in the prescribed manner may request the presiding officer or polling officer to complete his ballot paper on his behalf.

(2) Such presiding officer or polling officer, as the case may be, shall thereupon, with due regard to the maintenance of secrecy and in the presence of one witness and a person of the voter's own choice who shall accompany him, read to such voter the names of the candidates for the particular ward and affix a cross in the space provided on the ballot paper opposite the name of the candidate selected by word of mouth by such voter and shall thereafter fold the ballot paper and put it into the ballot box.

(3) In the performance of his functions under this regulation such polling officer shall disregard any document or thing exhibited or produced by or in the possession of the voter which indicates or suggests or purports to indicate or suggest the name of any candidate for whom such voter is or is not to vote.

Spoilt ballot papers

34. If a voter inadvertently spoils a ballot paper he may return it to the presiding officer or polling officer who, if he is satisfied of such inadvertence, shall give him another ballot paper and retain the spoilt ballot paper which he shall immediately cancel and endorse with the words "returned under regulation 34" and the fact of such cancellation shall be noted upon the counterfoil.

Tendered ballot papers

35. If a person representing himself to be a particular voter applies for a ballot paper after another person has voted in his name, the applicant shall, upon duly answering the questions permitted by regulation 31 to be asked of voters at the time of polling, be entitled to mark a ballot paper in the same manner as any other voter, but the ballot paper shall not be put into the ballot box but shall be given to the presiding officer, endorsed by him with the name of the voter and his serial number on the voters' list and set aside in a separate packet.

die amptelike merk sigbaar is en nadat hy die stembrief só opgehou het dat die voorsittende beampte of stemopnemer die amptelike merk kan herken, laat hy die stembrief val in die stembus wat voor die voorsittende beampte of stemopnemer staan.

(4) Indien die stembrief wat in die stembus ingesit staan te word, onopsetlik nie met die amptelike merk gemerk is nie, kan die voorsittende beampte of stemopnemer sodanige stembrief aldus laat merk.

(5) Indien die voorsittende beampte of stemopnemer om enige rede twyfel of 'n stembrief in besit van 'n kieser die stembrief is wat aan hom uitgereik is, kan hy, met die doel om die nommers gedruk op die stembrief en die teenblad te vergelyk, die kieser versoek om die nommer en amptelike merk op die keersy van die stembrief aan hom te toon, en die kieser moet dit doen.

(6) Die kieser moet sonder onnodige versuim sy stem uitbring en die stemburo verlaat sodra hy sy stembrief in die stembus geplaas het.

Kiesers wat nie in staat is om op die voorgeskrewe wyse te stem nie

33. (1) Enige kieser wat nie in staat is om sy stem op die voorgeskrewe wyse uit te bring nie, kan die verkiesingsbeampte of stemopnemer versoek om sy stembrief namens hom in te vul.

(2) Sodanige verkiesingsbeampte of stemopnemer, na gelang van die geval, moet daarop met behoorlike inagneming van die handhawing van geheimhouding en in teenwoordigheid van een getuie en 'n persoon van die kieser se eie keuse wat hom moet vergesel, aan sodanige kieser die name van die kandidate vir die bepaalde wyk voorlees en 'n kruis in die ruimte op die stembrief aanbring teenoor die naam van die kandidaat wat mondeling deur sodanige kieser gekies is, en moet daarna die stembrief vou en dit in die stembus plaas.

(3) By die verrigting van sy werksaamhede ingevolge hierdie regulasie moet sodanige stemopnemer enige dokument of ding verontagsaam wat deur die kieser vertoon of getoon word of in die kieser se besit is en wat die naam van enige kandidaat vir wie sodanige kieser moet stem of nie moet stem nie, aandui of suggereer of veronderstel is om dit aan te dui of te suggereer.

Bedorwe stembriewe

34. Indien 'n kieser onopsetlik 'n stembrief bederf, kan hy dit aan die voorsittende beampte of stemopnemer teruggee, en as laasgenoemde daarvan oortuig is dat dit onopsetlik gebeur het, gee hy hom 'n ander stembrief en behou hy die bedorwe stembrief wat hy onmiddellik kanselleer en teken hy die woorde "teruggegee kragtens regulasie 34" daarop aan, en die feit dat dit aldus gekanselleer is, word op die teenblad aangeteken.

Aangebode stembriewe

35. Indien iemand wat voorgee dat hy 'n bepaalde kieser is, om 'n stembrief aansoek doen nadat 'n ander persoon in sy naam gestem het, is die aansoeker, nadat hy behoorlik geantwoord het op die vrae wat volgens regulasie 31 tydens die stemming aan kiesers gestel kan word, geregtig om 'n stembrief te merk op dieselfde wyse as enige ander kieser, maar die stembrief word nie in die stembus geplaas nie, maar word aan die voorsittende beampte gegee en deur hom met die naam van die kieser en sy volgnommer geëndosseer en eenkant gesit in 'n afsonderlike pakket.

Circumstances under which ballot paper may be refused by presiding officer

36. (1) If any candidate or an agent of any candidate or any voter makes before the presiding officer a declaration on oath stating that a person enrolled on the voters' list is dead or is so incapacitated by sickness, absence or otherwise, that it is impossible for such person to be present at the polling station to record his vote at the election then being held, the presiding officer shall refuse to hand a ballot paper to any person who applies for the same in the name of the person who is the subject of the declaration unless the person so applying proves his identity to the satisfaction of the presiding officer or makes a declaration on oath before the presiding officer that he is the person whose name appears on the voters' list for the ward and that the statements made in the first-mentioned declaration (which shall be read over to him) are false.

(2) The presiding officer is hereby authorised and required to administer any such oath as is required by subregulation (1).

(3) Any person who makes any false statement in any declaration referred to in subregulation (1), knowing the statement to be false, shall be guilty of an offence.

(4) More than one person may be referred to in any declaration on oath made under subregulation (1), provided the reason why each of the persons referred to is unable to attend at a polling station can be clearly connected with the person to whom the declaration relates.

Sealing of ballot boxes, etc.

37. (1) Every presiding officer shall, immediately after the close of the poll, in the presence of such candidates or their agents (if any) as may be in attendance, make up into separate packets, sealed with his own seal and with the seals of those candidates or agents (if any) who desire to affix their seals—

(a) each ballot box entrusted to him, unopened;

(b) the unused and spoiled ballot papers;

(c) the counterfoils of all used ballot papers; and

(d) tendered ballot papers;

and shall forthwith deliver or cause to be delivered the packets to the electoral officer.

(2) The packets shall be accompanied by a return made by the presiding officer, in the form contained in Annexure E hereto, showing the number of ballot papers entrusted to him and accounting for them under the heads of "Ballot papers in the ballot box", "Unused ballot papers", "Spoiled ballot papers" and "Tendered ballot papers".

(3) A label in the form contained in Annexure F hereto shall be affixed to each of the packets mentioned in subregulation (1) and to the return mentioned in subregulation (2).

Action to be taken by the electoral officer upon receipt of ballot papers

38. The electoral officer shall upon receipt of voters' ballot papers retain such ballot papers unopened in safe custody until the counting of votes.

Verification of ballot paper return

39. (1) The electoral officer shall, upon receipt of all the packets and ballot boxes from every presiding officer, and not before, examine whether the seals are

Omstandighede waaronder voorsittende beampte 'n stembrief kan weier

36. (1) Indien 'n kandidaat of 'n agent van 'n kandidaat of 'n kieser voor die voorsittende beampte 'n beëdigde verklaring aflê dat 'n persoon wat in die kieserslys ingeskryf is, oorlede is of dat bedoelde persoon weens siekte, afwesigheid of om 'n ander rede onmoontlik by die stemburo teenwoordig kan wees om by die verkiesing wat dan gehou word, sy stem uit te bring, weier die voorsittende beampte om 'n stembrief uit te reik aan enigiemand wat daarom aansoek doen in naam van die persoon op wie die verklaring betrekking het, tensy die persoon wat aldus aansoek doen sy identiteit tot tevredenheid van die voorsittende beampte bewys of voor die voorsittende beampte 'n beëdigde verklaring aflê dat hy die persoon is wie se naam op die kieserslys vir die wyk voorkom en dat die bewerings in eersbedoelde verklaring (wat aan hom voorgelees moet word) vals is.

(2) Aan die voorsittende beampte word hierby die bevoegdheid verleen en die verpligting opgelê om 'n in subregulasie (1) bedoelde eed af te neem.

(3) Iemand wat in 'n in subregulasie (1) bedoelde verklaring 'n valse verklaring doen, wetende dat dit vals is, is aan 'n misdryf skuldig.

(4) In 'n beëdigde verklaring ingevolge subregulasie (1) afgelê, kan na meer as een persoon verwys word, mits die rede waarom elkeen van die persone na wie verwys word, nie by die stemburo kan wees nie, duidelik met die persoon op wie die verklaring betrekking het, verbind kan word.

Verseëling van stembusse, ens.

37. (1) Elke stemopnemer maak onmiddellik na die sluiting van die stemming, in teenwoordigheid van sodanige kandidate of hulle agente (as daar is) as wat aanwesig is, afsonderlike pakkette, verseël met sy eie seël en met die seëls van dié kandidate of hulle agente (as daar is) wat hulle seëls ook daarop wil afdruk, van—

(a) elke stembus wat aan hom toevertrou is, onoopgemaak;

(b) die ongebruikte en die bedorwe stembriewe;

(c) die teenblaaie van alle gebruikte stembriewe; en

(d) aangebode stembriewe;

en lewer die pakkette onverwyld aan die verkiesingsbeampte af of laat hulle aan hom aflewer.

(2) Die pakkette gaan vergesel van 'n opgawe in die vorm vervat in Aanhangsel E hiervan deur die voorsittende beampte verstrek waarin hy die getal stembriewe aan hom toevertrou noem en waarin hy van hulle rekenskap gee onder die hoofde "Stembriewe in die stembus", "Ongebruikte stembriewe", "Bedorwe stembriewe" en "Aangebode stembriewe".

(3) Elkeen van die pakkette in subregulasie (1) genoem en die opgawe in subregulasie (2) genoem, word voorsien van 'n etiket in die vorm vervat in Aanhangsel F hiervan.

Optrede deur verkiesingsbeampte by ontvangs van stembriewe

38. Elke verkiesingsbeampte moet by ontvangs van kiesers se stembriewe sodanige stembriewe onoopgemaak in veilige bewaring hou totdat die stemme getel word.

Verifiëring van stembriefopgawe

39. (1) By ontvangs deur die verkiesingsbeampte van al die pakkette en stembusse van iedere voorsittende beampte, en nie eerder nie, ondersoek hy of die seëls

University of Fort Hare
Together in Excellence

in order and afford such candidates or their agents as may be in attendance an opportunity to do the same and after that open the sealed packets containing the ballot paper return and shall open each ballot box and verify the number of ballot papers in the ballot box according to the ballot paper return given by each presiding officer by comparing it with the number of ballot papers in each such ballot box.

(2) When the electoral officer has completed the verification of the ballot papers in the ballot boxes for each polling station, and whether or not the number of ballot papers in the ballot boxes is found to correspond with the number appearing on the return, he shall in the presence of such candidates or their agents as may be present mix together the ballot papers contained in all the ballot boxes for a particular ward so that it is impossible to determine from which ballot box any particular ballot paper was taken.

(3) The electoral officer shall, after scrutinising the official mark on the ballot papers, proceed to count or cause to be counted the votes and while counting the votes shall cause the ballot papers to be kept with their faces upwards.

Manner of counting votes

40. The ballot papers shall, for the purposes of counting, be fastened together in packets of 50 (to each of which a distinctive number shall be assigned) and thereafter the number of votes for each candidate shall be recorded and checked.

Ballot papers to be rejected

41. (1) The electoral officer shall reject and not count any ballot paper—

(a) which does not bear the official mark;

(b) on which votes are cast for more than one candidate;

(c) which is unmarked or invalid owing to uncertainty;

(d) which bears any writing or mark by which a voter can be identified otherwise than in these Regulations prescribed.

(2) Subject to the provisions of subregulation (1), the electoral officer shall not reject any ballot paper on which a voter has clearly indicated, in a manner other than by means of a cross, for which candidate he has voted.

(3) The electoral officer shall endorse the word "rejected" on a ballot paper which he may reject as invalid.

Objection against acceptance or rejection of a ballot paper

42. (1) If a candidate or an agent objects to the acceptance of any ballot paper, the electoral officer shall endorse the words "objection raised against acceptance" on such ballot paper.

(2) If a candidate or an agent objects to the rejection of any ballot paper, the electoral officer shall endorse the words "objection raised against rejection" on such ballot paper.

Determination of successful candidate in event of equal number of votes

43. In the event of the number of votes being found to be equal for the candidates who obtained the greater or the greatest number of votes, the electoral officer shall by lot determine the successful candidate.

in orde is en gee hy sodanige kandidate of hulle agente as wat aanwesig is 'n geleentheid om dieselfde te doen, en daarna maak hy die verseëlde pakkette oop wat die opgawe van stembriewe bevat, en maak hy elke stembus oop en verifieer hy die getal stembriewe in die stembus ooreenkomstig die stembriefopgawe wat deur elke voorsittende beampte ingelewer is deur dit met die getal stembriewe in elke sodanige stembus te vergelyk.

(2) Wanneer die verkiesingsbeampte die verifiëring van die stembriewe in die stembusse vir elke stemburo uitgevoer het, maak hy, afgesien daarvan of die getal stembriewe in die stembusse klop met die getal wat op die opgawe voorkom al dan nie, in teenwoordigheid van sodanige kandidate of hulle agente as wat aanwesig is, die stembriewe uit al die stembusse vir 'n besondere wyk op so 'n wyse deurmekaar dat dit onmoontlik is om te bepaal uit watter stembus 'n bepaalde stembrief geneem is.

(3) Nadat hy die amptelike merk op die stembriewe nagegaan het, gaan die verkiesingsbeampte oor tot die tel van die stemme en terwyl hy die stemme tel of laat tel, laat hy die stembriewe met hulle voorkant na bo hou.

Wyse waarop stemme getel moet word

40. Vir die doel van die tel van stemme word die stembriewe in pakkette van 50 vasgebind (aan elkeen waarvan 'n onderskeidende nommer toegeken word) en daarna word die getal stemme ten opsigte van elke kandidaat opgeskryf en nagegaan.

Stembriewe wat verwerp moet word

41. (1) Die verkiesingsbeampte verwerp en tel nie 'n stembrief nie—

(a) wat nie die amptelike merk daarop het nie;

(b) waarop stemme op meer as een kandidaat uitgebring is;

(c) wat ongemerk of weens onsekerheid ongeldig is;

(d) wat enige skrif of merk daarop het waardeur 'n kieser op 'n ander wyse as dié in hierdie Regulasies voorgeskryf, geïdentifiseer kan word.

(2) Behoudens die bepalings van subregulasie (1), verwerp die verkiesingsbeampte nie 'n stembrief waarop 'n kieser op 'n ander wyse as by wyse van 'n kruis duidelik aangedui het vir watter kandidaat hy stem nie.

(3) Die verkiesingsbeampte endosseer die woord "verwerp" op 'n stembrief wat hy as ongeldig verwerp.

Beswaar teen aanname of verwerping van stembrief

42. (1) Indien 'n kandidaat of 'n agent beswaar maak teen die aanname van 'n stembrief, endosseer die verkiesingsbeampte die woorde "beswaar geopper teen aanname" op sodanige stembrief.

(2) Indien 'n kandidaat of 'n agent beswaar maak teen die verwerping van 'n stembrief, endosseer die verkiesingsbeampte die woorde "beswaar geopper teen verwerping" op sodanige stembrief.

Bepaling van suksesvolle kandidaat in geval van staking van stemme

43. Ingeval daar bevind word dat eweveel stemme uitgebring is op die kandidate wat die grootste getal stemme verkry het, bepaal die verkiesingsbeampte die suksesvolle kandidaat deur loting.

IN LUMINE TUO BIMUS LUMEN
University of Fort Hare
Together in Excellence

Result of election

44. The electoral officer shall, as soon as possible after determining which candidate has obtained the greater or the greatest number of votes in each ward, in public declare such candidates duly elected and shall make known the number of votes polled by each candidate.

Publication of names of elected members

45. (1) As soon as possible after the names of the candidates duly elected as members of the Community Council are known the electoral officer shall cause to be displayed on the notice board of each township manager's office situated in the area for which the Community Council has been established a list reflecting the full name of every member so elected together with the date on which he was duly elected, the name of the ward which such member represents and the total number of votes cast in favour of such member.

(2) A notice displayed in terms of subregulation (1) shall also reflect the names of the unsuccessful candidates in respect of each ward and the total number of votes cast in favour of each such candidate, as well as the number of rejected ballot papers in respect of each ward.

Disposal of electoral matter by electoral officer after the counting of votes has been completed

46. (1) The electoral officer shall after the completion of the counting of votes make up into separate packets the following:

(a) All unused, tendered and spoiled ballot papers used at each polling station;

(b) all counted ballot papers in respect of each ward;

(c) all rejected ballot papers in respect of each ward; and

(d) all ballot paper returns duly endorsed with his findings on the verification of such returns.

(2) The electoral officer shall—

(a) affix a label in the form contained in Annexure F hereto to each of the packets mentioned in subregulation (1);

(b) seal each such packet with his own seal and with the seals of such candidates and agents (if any) as may desire to affix their seals; and

(c) retain such packets for a period of six months and thereafter destroy them.

Immaterial mistakes not to affect validity of election

47. No election shall be invalid by reason of any mistake or non-compliance with the provisions of these Regulations if the election was conducted in accordance with the principles laid down herein and such mistake or non-compliance did not affect the result.

Evidence of election being held

48. Upon any charge of a corrupt or illegal practice or any other offence under these Regulations alleged to have been committed at or in connection with an election, the certificate of the electoral officer that the election mentioned therein was being or had been held shall be sufficient evidence of the fact that such election was being or had been held.

Sundays and public holidays

49. Whenever under these Regulations anything is required to be commenced, concluded or done on a particular date, and that date happens to fall upon a

Uitslag van verkiesing

44. Die verkiesingsbeampte verklaar in die openbaar, so gou moontlik nadat hy bepaal het watter kandidaat die grootste getal stemme in elke wyk verkry het, sodanige kandidate behoorlik verkose en maak die getal stemme bekend wat op elke kandidaat uitgebring is.

Bekendmaking van name van verkose lede

45. (1) Sodra die name van die kandidate wat behoorlik as lede van die Gemeenskapsraad verkies is, bekend is, laat die verkiesingsbeampte 'n lys bevattende die volle naam van elke kandidaat aldus verkies tesame met die datum waarop hy behoorlik verkies is, die naam van die wyk wat sodanige lid verteenwoordig en die totale getal stemme wat ten gunste van sodanige lid uitgebring is, op die aanplakbord van elke dorpsbestuurder se kantoor wat in sodanige gebied geleë is, vertoon.

(2) 'n Kennisgewing ingevolge subregulasie (1) vertoon, dui ook die name van die onsuksesvolle kandidate ten opsigte van elke wyk en die totale getal stemme aan wat ten opsigte van elke sodanige kandidaat uitgebring is, asook die getal bedorwe stembriewe ten opsigte van elke wyk.

Beskikking oor verkiesingstukke deur verkiesingsbeampte na afloop van tel van stemme

46. (1) Na afloop van die tel van die stemme maak die verkiesingsbeampte die volgende in afsonderlike pakkette op:

(a) Alle ongebruikte, aangebode en bedorwe stembriewe wat by elke stemburo gebruik is;

(b) alle getelde stembriewe met betrekking tot elke wyk;

(c) alle verworpe stembriewe met betrekking tot elke wyk; en

(d) alle stembriefopgawes behoorlik geëndosseer met sy bevindings betreffende die verifiëring van sodanige opgawes.

(2) Die verkiesingsbeampte—

(a) voorsien elke pakket genoem in subregulasie (1) van 'n etiket in die vorm vervat in Aanhangsel F hiervan;

(b) verseël elke sodanige pakket met sy eie seël en met die seëls van sodanige kandidate en agente (as daar is) as wat hulle seëls ook daarop wil afdruk; en

(c) bewaar sodanige pakkette vir 'n tydperk van ses maande en vernietig hulle daarna.

Onbelangrike foute raak nie geldigheid van verkiesing nie

47. Geen verkiesing is weens 'n fout of nie-nakoming van die bepalings van hierdie Regulasies ongeldig nie indien die verkiesing gehou is ooreenkomstig die beginsels hierin voorgeskryf en sodanige fout of nie-nakoming nie die uitslag geraak het nie.

Bewys dat verkiesing gehou is

48. By 'n aanklag van 'n korrupte of onwettige bedrywigheid of van 'n ander misdryf ingevolge hierdie Regulasies, wat volgens bewering by of in verband met 'n verkiesing begaan is, is die sertifikaat van die verkiesingsbeampte dat die verkiesing daarin gemeld aan die gang was of gehou is, voldoende bewys van die feit dat sodanige verkiesing aan die gang was of gehou is.

Sondae en openbare feesdae

49. Wanneer enigiets op 'n bepaalde datum ingevolge hierdie Regulasies begin, voltooi of gedoen moet word, en daardie datum op 'n Sondag val of op 'n

Sunday or a day declared by or under any law to be a public holiday, such thing shall be commenced, concluded or done on the date next succeeding such Sunday or public holiday or if the last-mentioned date is also a Sunday or public holiday, then on the date next succeeding such Sunday or public holiday.

Interrupting or disturbing proceedings at elections

50. Any person who wilfully interrupts, obstructs or disturbs any proceedings in connection with the conduct of elections in terms of the provisions of these Regulations or who on polling day uses any form of loudspeaker or forms or organises any procession of or demonstration by persons other than for official purposes, shall be guilty of an offence.

Fraud in connection with ballot papers, etc.

51. (1) Any person who—

(a) forges or counterfeits or fraudulently destroys any ballot paper or the official mark on any ballot paper;

(b) without due authority supplies a ballot paper to any person;

(c) fraudulently puts into any ballot box any paper other than the ballot paper which he is authorised by law to put in;

(d) fraudulently takes out of the polling station any ballot paper; or

(e) without due authority destroys, takes, opens or otherwise interferes with any ballot box or packet of ballot papers then in use for the purpose of the election;

shall be guilty of an offence.

(2) In any indictment, summons or charge for an offence in relation to ballot boxes, ballot papers and official marking instruments at an election, the property in such boxes, papers and instruments as well as the property in the counterfoils, may be stated to be in the electoral officer.

(3) If the electoral officer is so indicted or charged such property may be stated to be in the Community Council.

Infringement of secrecy

52. (1) Every officer, candidate or his agent in attendance at a polling station or at the counting of votes, shall maintain, and aid in maintaining, the secrecy of the voting in that station and shall not communicate, except for some purpose authorised by law, to any person any information likely to defeat the secrecy of the voting.

(2) No person, except as in these Regulations provided, shall interfere with or attempt to interfere with a voter when such voter is marking his ballot paper, or otherwise attempt to obtain information as to the candidate for whom any voter is about to vote or has voted, or communicate at any time to any person any information obtained as to the candidate for whom any voter is about to vote or has voted at a taking of poll under these Regulations.

(3) No person shall directly or indirectly induce any voter to display his ballot paper, after he has marked the same, in such a manner as to make known to any person the name of the candidate for whom the voter has so marked his ballot paper.

dag wat by of kragtens 'n wet tot 'n openbare feesdag verklaar is, moet dit begin, voltooi of gedoen word op die eersvolgende datum na sodanige Sondag of openbare feesdag, of as laasgenoemde datum ook op 'n Sondag of openbare feesdag val, dan op die eersvolgende datum na sodanige Sondag of openbare feesdag.

Onderbreking of steuring van verrigtings by verkiesings

50. 'n Persoon wat opsetlik verrigtings in verband met die hou van verkiesings ooreenkomstig die bepalings van hierdie Regulasies onderbreek, belemmer of versteur, of op stemdag enige vorm van luidspreker gebruik of enige optog van, of betoging deur, persone vorm of reël, uitgesonderd vir amptelike doeleindes, begaan 'n misdryf.

Bedrog met stembriewe, ens.

51. (1) 'n Persoon wat—

(a) 'n stembrief of die amptelike merk op 'n stembrief vervals, namaak of met opset om te bedrieg vernietig;

(b) sonder behoorlike magtiging 'n ander persoon van 'n stembrief voorsien;

(c) met opset om te bedrieg, enige ander stuk papier in 'n stembus plaas as die stembrief wat hy regtens daarin mag plaas;

(d) met opset om te bedrieg, 'n stembrief uit die stemburo wegneem; of

(e) sonder behoorlike magtiging 'n stembus of pakket stembriewe wat dan vir die doel van die verkiesing in gebruik is, vernietig, neem, oopmaak of hom op 'n ander wyse daarmee bemoei;

begaan 'n misdryf.

(2) In 'n akte van beskuldiging, dagvaarding of aanklag weens 'n misdryf met betrekking tot stembusse, stembriewe en amptelike merkinstrumente by 'n verkiesing kan verklaar word dat die eiendomsreg op die busse, stembriewe en instrumente, asook op die teenblaaie, by die verkiesingsbeampte by die verkiesing berus.

(3) Word die verkiesingsbeampte aldus beskuldig of aangekla, kan verklaar word dat die eiendomsreg by die Gemeenskapsraad berus.

Skending van geheimhouding

52. (1) Iedere beampte, kandidaat of sy agent wat by 'n stemburo of by die tel van stemme aanwesig is, moet die geheimhouding van die stemming in daardie buro handhaaf en help om dit te handhaaf en mag aan geen persoon, uitgesonderd vir die een of ander regtens geoorloofde doel, enige inligting meedeel wat waarskynlik die geheimhouding van die stemming sal verydel nie.

(2) Behoudens die bepalings van hierdie Regulasies, mag geen persoon hom met 'n kieser bemoei of probeer om hom met 'n kieser te bemoei wanneer sodanige kieser sy stembrief merk nie, of andersins by 'n stemming kragtens hierdie Regulasies probeer om te wete te kom vir watter kandidaat 'n kieser op die punt staan om te stem of gestem het nie of te eniger tyd aan enige persoon meegedeel vir watter kandidaat, volgens inligting wat verkry is, 'n kieser op die punt staan om te stem of gestem het nie.

(3) Geen persoon mag direk of indirek enige kieser beweeg om sy stembrief, nadat hy dit gemerk het, op so 'n wyse te vertoon dat enige persoon die naam van die kandidaat vir wie hy sy stembrief aldus gemerk het, te wete kom nie.

University of Pretoria
Digitized by the Sabinet Gateway under licence agreement

(4) No person shall place upon any ballot paper any mark or writing whereby a person who casts his vote on that ballot paper may be identified.

(5) Every person in attendance at the counting of votes shall maintain, and aid in maintaining, the secrecy of the voting, and shall not attempt to ascertain or communicate any information obtained at such counting as to the candidate for whom any vote is cast in any particular ballot paper.

(6) A person who has, in carrying out his duties under these Regulations, obtained knowledge as to the candidate for whom any other person has voted shall not, except in answer to a question lawfully put to him in the course of proceedings in a competent court, disclose such knowledge.

(7) Any person who contravenes or fails to comply with any provision of this regulation shall be guilty of an offence.

Failure by electoral officer or other officer to perform his duties

53. If the electoral officer or any other officer or person wilfully fails to perform any of the duties which he is required to perform under the provisions of these Regulations, he shall be guilty of an offence.

Treating

54. Any person who corruptly by himself or by any other person either before, during or after an election, directly or indirectly gives or provides, or pays wholly or in part the expense of giving or providing, any food, drink, entertainment, lodging or provisions to or for any person for the purpose of corruptly influencing that person or any other person to cast or refrain from casting his vote at an election, or on account of such person or any other person having voted or refrained from voting, or being about to vote or refrain from voting at such election, shall be guilty of the offence of treating.

Undue influence

55. (1) Any person who directly or indirectly by himself or by any other person makes use or threatens to make use of any force, violence or restraint or inflicts or threatens to inflict any temporal or spiritual injury, damage, harm or loss upon or against, or does or threatens to do anything to the disadvantage of any person in order to induce or compel that person to vote or refrain from voting, or on account of that person having voted or refrained from voting at any election, shall be guilty of the offence of undue influence.

(2) Any person who, by abduction, duress or fraudulent device or contrivance, impedes or prevents the free exercise of the franchise by any voter, or thereby compels, induces or prevails upon any voter either to cast or to refrain from casting his vote at any election, shall be guilty of the offence of undue influence.

Bribery

56. (1) Any person shall be guilty of the offence of bribery if he, directly or indirectly, by himself or by any other person—

(a) gives, lends or procures, or agrees to give, lend or procure, or offers, promises, or promises to procure or to endeavour to procure any money or any other thing, to or for any voter, or to or for any person on behalf of any voter, or to or for any other person, in order to induce any voter to vote or refrain from voting, or corruptly does any such act as aforesaid on account of such voter having voted or refrained from voting at any election;

(4) Geen persoon mag op 'n stembrief enige merk of skrif aanbring waardeur 'n persoon wat met daardie stembrief stem, geïdentifiseer kan word nie.

(5) Iedere persoon wat by die tel van die stemme aanwesig is, moet die geheimhouding van die stemming handhaaf en help om dit te handhaaf, en mag nie probeer vasstel of aan 'n ander persoon meedeel vir watter kandidaat, volgens inligting wat by sodanige telling verkry is, op 'n bepaalde stembrief 'n stem uitgebring is nie.

(6) 'n Persoon wat by die vervulling van sy pligte kragtens hierdie Regulasies te wete gekom het op watter kandidaat enige ander persoon sy stem uitgebring het, mag sodanige kennis nie bekendmaak nie, uitgesonderd in antwoord op 'n vraag wat wettiglik aan hom gestel is in die loop van verrigtings in 'n bevoegde hof.

(7) 'n Persoon wat enige van die bepalings van hierdie regulasie oortree of versuim om daaraan te voldoen, begaan 'n misdryf.

Versuim deur verkiesingsbeampte of ander beampte om sy pligte te vervul

53. Indien die verkiesingsbeampte of enige ander beampte of persoon opsetlik versuim om enige van die pligte te vervul wat kragtens die bepalings van hierdie Regulasies hom opgelê is, begaan hy 'n misdryf.

Trakteerdery

54. 'n Persoon wat korruptelik, hetsy voor, gedurende of na 'n verkiesing, self of deur 'n ander persoon direk of indirek aan of vir enige persoon voedsel, drank, vermaak, inwoning of lewensmiddele gee of verskaf of die koste om dit te gee of te verskaf, of 'n deel daarvan, betaal, met die doel om daardie persoon of 'n ander persoon korruptelik te beïnvloed om sy stem by die verkiesing uit te bring al dan nie, of omdat daardie persoon of 'n ander persoon sy stem by die verkiesing uitgebring het of gaan uitbring al dan nie, begaan die misdryf van trakteerdery.

Onbehoorlike beïnvloeding

55. (1) 'n Persoon wat, self of deur 'n ander persoon, direk of indirek teen enige persoon geweld of dwang gebruik of dreig om te gebruik, of aan enige persoon enige wêreldlike of geestelike leed, skade, kwaad of verlies berokken of dreig om dit te berokken of iets ten nadele van enige persoon doen of dreig om dit te doen, ten einde daardie persoon te beweeg of te dwing om sy stem by 'n verkiesing uit te bring al dan nie, of omdat hy sy stem by 'n verkiesing uitgebring het al dan nie, begaan die misdryf van onbehoorlike beïnvloeding.

(2) 'n Persoon wat deur ontvoering, dwang of enige bedrieglike middel die vrye uitoefening van die stemreg deur 'n kieser belemmer of belet of 'n kieser daardeur dwing, beweeg of oorhaal om sy stem by 'n verkiesing uit te bring al dan nie, begaan die misdryf van onbehoorlike beïnvloeding.

Omkopery

56. (1) 'n Persoon begaan die misdryf van omkopery indien hy, self of deur 'n ander, direk of indirek—

(a) aan of vir 'n kieser, of aan of vir 'n persoon ten behoewe van 'n kieser, of aan of vir enige ander persoon, enige geld of enigiets anders gee, leen of verkry of ooreenkom om dit te gee, te leen of te verkry of dit aanbied, beloof of beloof om dit te verkry of om te probeer om te verkry, ten einde 'n kieser te beweeg om sy stem by 'n verkiesing uit te bring al dan nie, of korruptelik een van voormelde handelinge verrig omdat die kieser sy stem by 'n verkiesing uitgebring het al dan nie;

(b) gives, lends or agrees to give or lend, or offers, or promises to procure or to endeavour to procure any money or any other thing to or for any voter, or to or for any person on behalf of any voter, or to or for any other person, for acting or joining in any procession or demonstration before, during or after any election;

(c) makes any such gift, loan, offer, promise, procurement or agreement to or for any person in order to induce such person to procure or endeavour to procure, the return of any candidate at any election or the vote of any voter at an election;

(d) upon or in consequence of any such gift, loan, offer, promise, procurement or agreement, procures, or engages, promises or endeavours to procure, the return of any candidate at any election or the vote of any voter at any election;

(e) advances or pays, or causes to be advanced or paid, any money, to, or for the use of, any other person with the intent that such money, or any part thereof, shall be expended in bribery at any election, or knowingly pays, or causes to be paid, any money to any person in discharge or repayment of any money wholly or in part expended in bribery at any election;

(f) before or during any election, receives or contracts for any money or loan, for himself or for any other person, for voting or agreeing to vote, or for refraining or agreeing to refrain from voting, at any election;

(g) after any election receives any money on account of any person having voted or refrained from voting or having induced any other person to vote or refrain from voting at any election; or

(h) conveys or transfers or is concerned with the conveyance or transfer of any property, or pays or is concerned with the payment of any money, to any person for the purpose of enabling him to vote, thereby to influence his vote at any future election, or pays or is concerned with the payment of any money on behalf of any voter for the purpose of inducing him to vote or refrain from voting.

(2) Nothing in this regulation contained shall be construed as applying to any money paid or agreed to be paid for or on account of any electoral expenditure bona fide and lawfully incurred.

Personation

57. Any person who—

(a) at any election applies for a ballot paper in the name of some other person, whether living, dead or fictitious; or

(b) having voted once at any election, applies again at any polling station at the same election for a ballot paper;

shall be guilty of the offence of personation.

Corrupt procurement of candidature or withdrawal thereof

58. Any person who—

(a) corruptly induces or procures any other person to become a candidate or to withdraw as a candidate at any election in consideration of any payment or promise of any nature;

(b) becomes a candidate or withdraws as a candidate at any election in pursuance of such inducement or procurement; or

(b) aan of vir 'n kieser, of aan of vir 'n persoon ten behoewe van 'n kieser, of aan of vir enige ander persoon, enige geld of enigiets anders gee of leen, of ooreenkom om dit te gee of te leen, of dit aanbied, of beloof om dit te verkry of om te probeer om dit te verkry, vir optrede in of deelname aan enige optog of betoging voor, gedurende of na 'n verkiesing;

(c) aan of vir 'n persoon sodanige skenking, lening, aanbod, belofte, verkryging of ooreenkoms gee, verstrek, doen of aangaan ten einde sodanige persoon te beweeg om die verkiesing van 'n kandidaat by 'n verkiesing of die stem van 'n kieser by 'n verkiesing te verkry of om te probeer om dit te verkry;

(d) teen of ten gevolge van sodanige skenking, lening, aanbod, belofte, verkryging of ooreenkoms, die verkiesing van 'n kandidaat by 'n verkiesing of die stem van 'n kieser by 'n verkiesing verkry of onderneem, beloof of probeer om dit te verkry;

(e) aan of vir die gebruik van 'n ander persoon enige geld voorskiet of betaal of laat voorskiet of betaal, met die bedoeling dat daardie geld of enige deel daarvan by 'n verkiesing aan omkopery bestee moet word, of willens en wetens aan 'n persoon enige geld betaal of laat betaal ter vereffening of terugbetaling van geld wat geheel of ten dele by 'n verkiesing aan omkopery bestee is;

(f) voor of gedurende enige verkiesing, vir homself of 'n ander persoon, enige geld of lening ontvang of beding, omdat hy by 'n verkiesing gestem het of ooreengekom het om te stem, of omdat hy hom by 'n verkiesing van stemming onthou het of ooreengekom het om hom van stemming te onthou;

(g) na 'n verkiesing geld ontvang omdat 'n persoon sy stem uitgebring het al dan nie of 'n ander persoon bewoeg het om sy stem by enige verkiesing uit te bring al dan nie; of

(h) eiendom oordra of transporteer of betrokke is by die oordrag of transport van eiendom, of enige geld betaal of betrokke is by die betaal van enige geld aan 'n persoon ten einde hom in staat te stel om te stem en daardeur sy stem by 'n toekomstige verkiesing te beinvloed, of enige geld betaal of betrokke is by die betaling van enige geld ten behoewe van 'n kieser ten einde hom te beweeg om sy stem uit te bring al dan nie.

(2) Geen bepaling van hierdie regulasie mag uitgelê word nie as sou dit van toepassing wees op geld wat vir of weens bona fide- en wettig aangegane verkiesingskoste betaal is of volgens ooreenkoms betaal moet word.

Uitgee vir 'n ander

57. 'n Persoon wat—

(a) by enige verkiesing in die naam van 'n ander persoon, hetsy lewend of afgestorwe, of van 'n denkbeeldige persoon, om 'n stembrief aansoek doen; of

(b) nadat hy een maal by 'n verkiesing gestem het, weer by 'n stemburo by dieselfde verkiesing om 'n stembrief aansoek doen;

begaan die misdryf van hom vir 'n ander uit te gee.

Korrupte verkryging van kandidatuur of terugtrekking daarvan

58. 'n Persoon wat—

(a) 'n ander persoon korruptelik beweeg of oorhaal om, as teenprestasie vir 'n betaling of belofte van watter aard ook al, 'n kandidaat by enige verkiesing te word of as sodanig terug te trek;

(b) as gevolg daarvan dat hy aldus beweeg of oorgehaal is, 'n kandidaat by enige verkiesing word of as sodanig terugtrek; of

(c) before or during an election publishes a false statement of the withdrawal of a candidate at an election for the purpose of promoting or procuring the election of another candidate, knowing that statement to be false;

shall be guilty of an offence.

Bills, placards, etc., to bear publishers' name

59. (1) Every bill, placard, poster, pamphlet, circular or other printed matter having reference to an election shall clearly bear the name and address of the printer and publisher thereof.

(2) No person shall print, publish or post up or cause to be printed, published or posted up, any such printed matter which fails to bear clearly the name and address of the printer and publisher.

(3) The proprietor and publisher of every newspaper shall cause the word "advertisement" to be printed as a headline to each article or paragraph in his newspaper containing electoral matter, the insertion of which is or is to be paid for or for which any reward or compensation or promise of reward or compensation is or is to be made.

(4) The words "electoral matter" used in subregulation (3) include all matters which on the face of it are intended or calculated to affect the result of an election, and any report of the speech of a candidate if the insertion of the report is or is to be paid for.

(5) Every report, letter, article, bill, placard, poster, pamphlet, circular, cartoon or other printed matter (hereinafter in this subregulation called a newspaper article) which, on the face of it, is intended or calculated to affect the result of an election, and is inserted in any newspaper or otherwise produced and is published on or after the date of commencement of such election of members to the Community Council, shall bear at the foot thereof the full name and address of the person by whom such newspaper article was written or produced: Provided that—

(a) any newspaper article which is inserted in any newspaper as aforesaid and which has been altered materially by the editor of such newspaper, may also be signed by such editor;

(b) in the case of a report of a public meeting which is written jointly by two or more persons, it shall be sufficient for the purposes of this subregulation if the report as a whole bears upon the face of it the full names and addresses of the persons by whom it was written; and

(c) in the case of headlines to any newspaper article which is inserted in any newspaper as aforesaid, and bills, placards or posters having reference thereto, which are issued in the ordinary practice of a newspaper, it shall be sufficient for the purposes of this subregulation if the full names and addresses of the persons by whom such headlines, bills, placards or posters were written, and a statement that such headlines, bills, placards or posters were written by such persons, are published in the issue of the newspaper in which such newspaper article is inserted.

(6) Subject to the provisions of proviso (c) to subregulation (5), no person shall print or publish any newspaper or other printed matter in which is inserted or produced any such newspaper article, which fails

(c) voor of gedurende 'n verkiesing, met die doel om die verkiesing van 'n ander kandidaat te bevorder of te bewerkstellig, 'n valse verklaring dat 'n kandidaat by 'n verkiesing teruggetrek het, publiseer wetende dat die verklaring vals is;

begaan 'n misdryf.

Biljette, plakkate, ens., moet naam van uitgewer dra

59. (1) Alle biljette, plakkate, aanplakbiljette, pamflette, omsendbriewe of ander drukwerk wat op 'n verkiesing betrekking het, moet die naam en adres van die drukker en uitgewer daarvan duidelik dra.

(2) Geen persoon mag sodanige drukwerk wat nie die naam en adres van die drukker en uitgewer dra nie, druk, uitgee of aanplak of laat druk, uitgee of aanplak nie.

(3) Die eienaar en uitgewer van iedere nuusblad moet die woord "advertensie" as 'n opskrif laat druk by elke artikel of paragraaf in sy nuusblad wat verkiesingstof bevat, vir die opneming waarvan betaal is of gaan word of waarvoor 'n beloning of vergoeding of 'n belofte van beloning of vergoeding gegee is of gaan word.

(4) Die woord "verkiesingstof" in subregulasie (3) gebesig, omvat alles wat, na die skyn geoordeel, bedoel of daarop bereken is om die uitslag van 'n verkiesing te beïnvloed, asook enige verslag van 'n toespraak van 'n kandidaat, indien vir die opneming van die verslag betaal word of gaan word.

(5) Alle verslae, briewe, artikels, biljette, plakkate, aanplakbiljette, pamflette, omsendbriewe, spotprente of ander drukwerk (hieronder in hierdie subregulasie nuusbladartikels genoem) wat, na die skyn geoordeel, bedoel of daarop bereken is om die uitslag van 'n verkiesing te beïnvloed, en in 'n nuusblad opgeneem of op 'n ander wyse geproduseer word en op of na die datum van die begin van die verkiesing van lede van die gemeenskapsraad gepubliseer word, moet onderaan die volle naam en adres dra van die persoon deur wie die nuusbladartikel geskryf of geproduseer is: Met dien verstande dat—

(a) enige sodanige nuusbladartikel wat soos voormeld in 'n nuusblad opgeneem word en wat wesenlik deur die redakteur van die nuusblad verander is, ook deur sodanige redakteur onderteken kan word;

(b) in die geval van 'n verslag van 'n openbare vergadering wat deur twee of meer persone gesamentlik geskryf is, dit voldoende vir doeleindes van hierdie subregulasie is as die verslag in sy geheel op die voorkant daarvan die volle name en adresse dra van die persone deur wie dit geskryf is; en

(c) in die geval van opskrifte by 'n nuusbladartikel wat soos voormeld in enige nuusblad opgeneem is, en van biljette, plakkate of aanplakbiljette wat daarop betrekking het en wat volgens die gewone gebruik van 'n nuusblad uitgegee word, dit voldoende vir doeleindes van hierdie subregulasie is as die volle name en adresse van die persone deur wie sodanige opskrifte, biljette, plakkate of aanplakbiljette geskryf is, met 'n verklaring dat sodanige opskrifte, biljette, plakkate of aanplakbiljette deur daardie persone geskryf is, gepubliseer word in die uitgawe van die nuusblad waarin sodanige nuusbladartikel opgeneem word.

(6) Behoudens die bepalings van voorbehoudsbepaling (c) van subregulasie (5), mag geen persoon enige nuusblad of ander drukwerk waarin enige sodanige nuusbladartikel opgeneem of geproduseer is, wat nie op

to bear upon the face thereof the full name and address of the person by whom it was written or produced.

(7) For the purposes of this regulation an election shall be deemed to commence on the date of first publication of the notice referred to in regulation 19.

(8) Any person who contravenes or fails to comply with any provision of this regulation shall be guilty of an offence.

Meetings on premises where sale of liquor usually takes place

60. (1) No person shall hire or use—

(a) any premises on which the sale, by wholesale or retail, of any intoxicating liquor is authorised (whether the authorisation be for consumption of liquor on or off the premises); or

(b) any premises where any intoxicating liquor is sold or is supplied to members of a club, society or association;

or any part of any such premises, as a committee room or for any meeting of voters for the purpose of promoting or procuring the election of a candidate at an election or in connection with arrangements made by any person or party in reference to an election.

(2) No person shall let or make available for use any such premises or part thereof, knowing that it is intended to be so used.

(3) Any agreement entered into in contravention of subregulation (1) or (2) shall be null and void.

(4) Any person who contravenes or fails to comply with any provision of this regulation shall be guilty of an offence.

Consequences to the candidates

61. If upon trial it is proved that any corrupt practice or illegal practice has been committed in reference to the election of a member to the Community Council by or with the knowledge and consent or approval of any candidate at that election, the election of that candidate shall be void and a casual vacancy shall exist.

Vacating of seats by members of the Community Council

62. The seat of a member of the Community Council shall become vacant—

(a) upon the death of such member;

(b) upon receipt by the Secretary of the Community Council of a notice of resignation under the hand of such member;

(c) should such member fail to attend three consecutive general meetings of the Community Council without its special leave;

(d) should such member withdraw from any meeting of the Community Council without the permission of the Chairman;

(e) in the event of such member becoming subject to any of the disqualifications mentioned in regulation 12.

Filling of casual vacancies

63. Should the seat of a member become vacant in terms of regulation 61 or 62 or should the Minister under section 3 (2) of the Act determine that a vacancy exist, the vacancy shall, unless the term of the Community Council expires before such vacancy can be

die voorkant daarvan die volle naam en adres dra van die persoon deur wie dit geskryf of geproduseer is nie, druk of publiseer nie.

(7) Vir doeleindes van hierdie regulasie word 'n verkiesing geag te begin op die datum van eerste afkondiging van die kennisgewing in regulasie 19 bedoel.

(8) 'n Persoon wat enige van die bepalings van hierdie regulasie oortree of versuim om daaraan te voldoen, begaan 'n misdryf.

Vergaderings op persele waar gewoonlik drank verkoop word

60. (1) Geen persoon mag—

(a) 'n perseel waarop die verkoop van bedwelmende drank, by wyse van groothandel of kleinhandel, deur 'n magtiging gemagtig is (ongeag of dit 'n magtiging is vir verbruik van drank op die perseel of daarbuite); of

(b) 'n perseel waar bedwelmende drank verkoop of verskaf word aan lede van 'n klub, genootskap of vereniging;

of 'n gedeelte van enige sodanige perseel, as 'n komiteekamer of vir 'n vergadering van kiesers ter bevordering of bewerkstelliging van die verkiesing van 'n kandidaat by 'n verkiesing of in verband met reëlings wat deur 'n persoon of party met betrekking tot 'n verkiesing getref is, huur of gebruik nie.

(2) Geen persoon mag sodanige perseel of 'n gedeelte daarvan verhuur of vir gebruik beskikbaar stel nie, wetende dat dit die bedoeling is om dit aldus te gebruik.

(3) Enige ooreenkoms wat strydig met subregulasie (1) of (2) gesluit is, is van nul en gener waarde.

(4) 'n Persoon wat enige van die bepalings van hierdie regulasie oortree of versuim om daaraan te voldoen, begaan 'n misdryf.

Gevolge vir kandidaat

61. As daar by 'n verhoor bewys word dat 'n korrupte bedrywigheid of 'n onwettige bedrywigheid in verband met die verkiesing van 'n lid van die Gemeenskapsraad deur of met die kennis en instemming of goedkeuring van enige kandidaat by daardie verkiesing begaan is, is die verkiesing van daardie kandidaat nietig en bestaan daar 'n toevallige vakature.

Ontruiming van setels deur lede van die Gemeenskapsraad

62. Die setel van 'n lid van die Gemeenskapsraad raak vakant—

(a) by die afsterwe van sodanige lid;

(b) by ontvangs deur die Sekretaris van die Gemeenskapsraad van 'n kennisgewing van bedanking onder die handtekening van sodanige lid;

(c) indien sodanige lid versuim om drie opeenvolgende algemene vergaderings van die Gemeenskapsraad by te woon sonder die spesiale toestemming daarvan;

(d) indien sodanige lid hom onttrek aan enige vergadering van die Gemeenskapsraad sonder die toestemming van die Voorsitter;

(e) indien sodanige lid onderhewig raak aan enige van die diskwalifikasies in regulasie 12 genoem.

Vulling van toevallige vakatures

63. Indien die setel van 'n lid ingevolge regulasie 61 of 62 vakant raak of indien die Minister kragtens artikel 3 (2) van die Wet bepaal dat 'n vakature bestaan, moet die vakature, tensy die termyn van die Gemeenskapsraad verstryk voordat sodanige vakature

filled, be filled within six months of its occurring, by an election which shall be held in accordance with the provisions of these Regulations.

CHAPTER 6

THE CONVENING OF, THE PROCEDURE AT AND THE CONDUCT OF MEETINGS OF THE COMMUNITY COUNCIL AND COMMITTEES

First general meeting of Community Council

64. The first general meeting of the Community Council shall be convened by the Chief Director on a date, which date shall be within 60 days after the first general election, and at a time and in the manner decided upon by him.

Election of Chairman

65. Immediately after all the members present at the first general meeting of the Community Council and thereafter at the general meeting held in October of each year, have taken their seats the Council shall proceed to the election of the Chairman from the ranks of members of the Council in the manner prescribed in regulation 66.

Manner of election of Chairman

66. (1) A member having first ascertained that the person whom he wishes to propose as Chairman and who is then present, is willing to serve if elected, may propose such person as Chairman and such proposal shall lapse if not seconded.

(2) There shall be no limit to the number of candidates who may be proposed and seconded under subregulation (1), but no member who has already proposed or seconded a candidate shall propose or second any other candidate and no member shall propose or second his own candidature.

(3) The names of the persons duly nominated shall be announced by the person presiding at the relevant meeting of the Community Council (hereinafter in this regulation referred to as the presiding officer) and no debate shall be allowed at the election.

(4) If more than one member be proposed as Chairman, a secret ballot shall be held at which—

(a) the presiding officer shall hand each member present a ballot paper with the names of all the candidates thereon and with an official mark on the reverse side thereof;

(b) every member shall signify the candidate for whom he desires to vote by placing a cross opposite the name of such candidate;

(c) the presiding officer shall call the names of all the members and each member shall, when his name is called, drop his ballot paper into a ballot box;

(d) when all members who wish to vote have done so the presiding officer shall, in the presence of the Community Council, examine the ballot papers with the assistance of such members as the Community Council may decide upon and declare the result of the ballot.

(5) The successful candidate shall be the candidate who obtains the greater or the greatest number of votes cast.

(6) In the event of the number of votes being found to be equal for the candidates who obtained the greater or the greatest number of votes, the presiding officer shall by lot determine the successful candidate.

gevul kan word, binne ses maande nadat dit ontstaan het, gevul word deur 'n verkiesing wat ooreenkomstig die bepalings van hierdie Regulasies gehou word.

HOOFSTUK 6

DIE BYEENROEPING VAN, DIE PROSEDURE OP EN DIE HOU VAN VERGADERINGS VAN DIE GEMEENSKAPSRAAD EN KOMITEES

Eerste algemene vergadering van Gemeenskapsraad

64. Die Hoofdirekteur roep die eerste algemene vergadering van die Gemeenskapsraad byeen op 'n datum, wat binne 60 dae na die eerste algemene verkiesing moet wees, en op 'n tyd en wyse soos deur hom bepaal.

Verkiesing van Voorsitter

65. Onmiddellik nadat al die lede wat op die eerste algemene vergadering van die Gemeenskapsraad en daarna op die algemene vergadering gehou in Oktober van elke jaar, hul sitplekke ingeneem het, gaan die Gemeenskapsraad oor tot die verkiesing van die Voorsitter uit die geledere van die lede van die Gemeenskapsraad op die wyse in regulasie 66 voorgeskryf.

Wyse waarop Voorsitter verkies word

66. (1) 'n Lid wat vooraf vasgestel het dat die persoon wat hy as Voorsitter wil voorstel en wat dan teenwoordig is, gewillig is om te dien as hy verkies word, kan sodanige persoon as Voorsitter voorstel en indien sodanige voorstel nie gesekondeer word nie, verval dit.

(2) Daar is geen beperking op die getal kandidate wat kragtens subregulasie (1) voorgestel en gesekondeer kan word nie, maar geen lid wat reeds 'n kandidaat voorgestel of gesekondeer het, mag 'n ander kandidaat voorstel of sekondeer nie en geen lid mag sy eie kandidatuur voorstel of sekondeer nie.

(3) Die name van die behoorlik genomineerde persone moet deur die persoon wat by die betrokke vergadering van die Gemeenskapsraad voorsit (hierna in hierdie regulasie die voorsittende beampte genoem) aangekondig word op die sitting waartydens die verkiesing moet plaasvind, en geen debat word by die verkiesing toegelaat nie.

(4) Indien meer as een lid as Voorsitter voorgestel word, word 'n geheime stemming gehou waarby—

(a) die voorsittende beampte aan elke lid teenwoordig 'n stembriefie met die name van al die kandidate daarop en met 'n amptelike merk op die keersy daarvan uitreik;

(b) elke lid die kandidaat vir wie hy wil stem, aandui deur 'n kruis teenoor die naam van sodanige kandidaat te plaas;

(c) die voorsittende beampte die name van al die lede uitroep en elke lid, wanneer sy naam uitgeroep word, sy stembriefie in 'n stembus laat val;

(d) sodra alle lede wat wil stem dit gedoen het, die voorsittende beampte met die hulp van sodanige lede as wat die Gemeenskapsraad bepaal, die stembriefies in teenwoordigheid van die Gemeenskapsraad ondersoek en die uitslag van die stemming bekend maak.

(5) Die suksesvolle kandidaat is die kandidaat wat die grootste getal stemme uitgebring, verkry.

(6) Ingeval daar bevind word dat daar ewe veel stemme uitgebring is op die kandidate wat die grootste getal stemme verkry het, bepaal die voorsittende beampte die suksesvolle kandidaat by loting.

(7) A member who arrives after the names of the members have been called shall not be entitled to vote.

(8) If only one member is proposed and seconded as Chairman he shall be declared elected.

Manner of election of Deputy Chairman

67. Immediately after the Chairman has been elected, the Community Council shall proceed to the election of a Deputy Chairman and the provisions of regulation 66 shall apply *mutatis mutandis* to the election of a Deputy Chairman: Provided that any reference in regulation 66 to the presiding officer shall be construed as being a reference to the Chairman.

Period of office of Chairman and Deputy Chairman

68. Subject to the provisions of regulation 69, the Chairman and the Deputy Chairman shall hold office until their successors be elected at the general meeting referred to in regulation 65.

Vacation of office by Chairman or Deputy Chairman

69. (1) The Chairman or the Deputy Chairman shall vacate his office—

(a) if his seat as a member of the Community Council becomes vacant or is deemed to have been vacated in terms of the provisions of these Regulations;

(b) if he resigns his office as Chairman or Deputy Chairman by notice, in writing, to the Secretary of the Community Council or makes an announcement to that effect at a meeting of the Community Council.

(2) If the Chairman or the Deputy Chairman vacates his seat otherwise than in pursuance of his resignation announced at a meeting of the Community Council, the Secretary of the Community Council shall at the first ensuing meeting of the Community Council inform it accordingly.

Filling of casual vacancies

70. A casual vacancy in the office of Chairman or of Deputy Chairman shall, if the Community Council is holding a meeting when the vacancy occurs, be filled by the election at that meeting of an incumbent to the office concerned in the manner provided in these Regulations and if the Community Council is then not holding a meeting such election shall take place at its next meeting.

Meetings of the Community Council

71. (1) Every meeting of the Community Council shall be held at the seat of the Council which shall be situated within the area for which the Community Council has been established: Provided that the Minister may direct that any such meeting be held at a place situated outside such area.

(2) The Community Council shall hold one general meeting each month.

(3) Notwithstanding the provisions of regulation 78, the Community Council shall at each general meeting thereof, whether or not there is a quorum at such meeting, decide the date and time of the next general meeting.

(4) Subject to the provisions of regulation 64, the Secretary of the Community Council shall, in writing, not less than seven days prior to a general meeting of the Council inform the members, the Chief Director and the Commissioner of the date and time fixed for, and the business to be transacted at, such general meeting.

(7) 'n Lid wat opdaag nadat die lede se name uitgeroep is, is nie geregtig om te stem nie.

(8) Indien slegs een lid as Voorsitter voorgestel en gesekondeer word, word hy verkose verklaar.

Wyse waarop Ondervoorsitter verkies word

67. Onmiddellik nadat die Voorsitter verkies is, gaan die Gemeenskapsraad oor tot die verkiesing van 'n Ondervoorsitter en is die bepalings van regulasie 66 *mutatis mutandis* van toepassing by die verkiesing van 'n Ondervoorsitter: Met dien verstande dat 'n verwysing in regulasie 66 na die voorsittende beampte uitgelê word as 'n verwysing na die Voorsitter.

Ampstermyn van Voorsitter en Ondervoorsitter

68. Behoudens die bepalings van regulasie 69, beklee die Voorsitter en die Ondervoorsitter hulle amp totdat hul opvolgers gedurende die algemene vergadering in regulasie 65 bedoel verkies word.

Ontruiming van amp deur Voorsitter of Ondervoorsitter

69. (1) Die Voorsitter of die Ondervoorsitter ontruim sy amp—

(a) indien sy setel as lid van die Gemeenskapsraad vakant raak of geag word ontruim te gewees het ingevolge die bepalings van hierdie Regulasies;

(b) indien hy uit sy amp as Voorsitter of Ondervoorsitter bedank by skriftelike kennisgewing aan die Sekretaris van die Gemeenskapsraad of 'n aankondiging tot dien effekte op 'n sitting van die Gemeenskapsraad doen.

(2) Indien die Voorsitter of die Ondervoorsitter sy setel ontruim anders as deur die aankondiging van sy bedanking op 'n sitting van die Gemeenskapsraad, verwittig die Sekretaris van die Gemeenskapsraad gedurende die eerste daaropvolgende vergadering van die Gemeenskapsraad die Gemeenskapsraad dienooreenkomstig.

Vulling van toevallige vakatures

70. 'n Toevallige vakature in die amp van Voorsitter of van Ondervoorsitter moet, indien die Gemeenskapsraad in sitting is wanneer die vakature ontstaan, gevul word deur die verkiesing tydens sodanige sitting van 'n bekleër vir die betrokke amp op die wyse in hierdie Regulasies bepaal, en indien die Gemeenskapsraad nie dan in sitting is nie, moet sodanige verkiesing op die daaropvolgende vergadering plaasvind.

Vergaderings van die Gemeenskapsraad

71. (1) Elke vergadering van die Gemeenskapsraad word gehou by die setel van die Gemeenskapsraad wat binne die gebied waarvoor die Gemeenskapsraad ingestel is, geleë moet wees: Met dien verstande dat die Minister kan gelas dat enige sodanige vergadering gehou moet word op 'n plek geleë buite sodanige gebied.

(2) Die Gemeenskapsraad hou een algemene vergadering elke maand.

(3) Ondanks die bepalings van regulasie 78, bepaal die Gemeenskapsraad by elke algemene vergadering daarvan, of daar 'n kworum by sodanige vergadering is aldan nie, die datum en tyd van die daaropvolgende algemene vergadering.

(4) Behoudens die bepalings van regulasie 64, stel die Sekretaris van die Gemeenskapsraad die lede, die Hoofdirekteur en die Kommissaris minstens sewe dae voor 'n algemene vergadering van die Gemeenskapsraad skriftelik in kennis van die datum en tyd bepaal vir en die sake wat behandel gaan word gedurende sodanige algemene vergadering.

University of Cape Town

Special meeting of the Community Council

72. (1) The Chairman may at any time convene a special meeting of the Community Council and only such business as the Chairman may lay before it or approve shall be transacted.

(2) The Secretary of the Community Council shall, in writing, not less than 72 hours prior to a special meeting of the Community Council inform the members, the Chief Director and the Commissioner of the date and time fixed for, and the business to be transacted at, such special meeting.

Meetings of Community Council open to public and press

73. (1) Subject to the provisions of subregulation (2), all meetings of the Community Council shall be open to the public and the press.

(2) If the Community Council is of the opinion that any matter can more conveniently or advantageously be dealt with in the absence of members of the public and the press, it may, subject to the provisions of section 3 (6) of the Act, exclude the public and the press from such meeting while such matter is dealt with.

Chairman to preside at meetings of Community Council

74. The Chairman or, in his absence, the Deputy Chairman shall preside at all meetings of the Community Council or if both the Chairman and the Deputy Chairman are unable through absence or other cause to preside at a meeting, the members present shall, with the Secretary of the Community Council, who shall not be entitled to vote, as presiding officer, nominate one of the members present to preside at such meeting: Provided that the Chairman of the Board or a member of the Board designated by him shall preside at the first general meeting of the Community Council until a Chairman is elected.

Attendance register

75. Every member attending a meeting of the Community Council shall sign the attendance register kept for this purpose.

Order of business

76. The business of each meeting of the Community Council shall, in accordance with the need thereof, be transacted in the following order:

(a) Notice convening the meeting;
(b) obituaries and ceremonial speeches;
(c) applications for leave of absence;
(d) official announcements;
(e) unopposed motions of the Chairman;
(f) minutes of previous meeting;
(g) reports of committees;
(h) questions of which notice has been given;
(i) motions held over from previous meetings;
(j) petitions;
(k) new motions;
(l) other matters.

Business to be transacted at meeting of Community Council

77. No business other than that included in the agenda embodied in the notice convening a meeting shall be transacted at such meeting of the Community Council: Provided that at such meeting, and with the approval of the Chairman, matters of urgency may be raised and submitted to the Council.

Spesiale vergadering van die Gemeenskapsraad

72. (1) Die Voorsitter kan te eniger tyd 'n spesiale vergadering van die Gemeenskapsraad byeenroep en slegs die sake wat die Voorsitter voorlê of goedkeur, word behandel.

(2) Die Sekretaris van die Gemeenskapsraad stel die lede, die Hoofdirekteur en die Kommissaris minstens 72 uur voor 'n spesiale vergadering van die Gemeenskapsraad skriftelik in kennis van die datum en tyd bepaal vir en die sake wat behandel gaan word gedurende sodanige spesiale vergadering.

Vergaderings van Gemeenskapsraad vir publiek en pers toeganklik

73. (1) Behoudens die bepalings van subregulasie (2), is alle vergaderings van die Gemeenskapsraad vir die publiek en pers toeganklik.

(2) Indien die Gemeenskapsraad van mening is dat 'n aangeleentheid geriefliker of voordeliger in die afwesigheid van lede van die publiek en die pers behandel kan word, kan hy, behoudens die bepalings van artikel 3 (6) van die Wet, die publiek en die pers van sodanige vergaderings uitsluit terwyl sodanige aangeleentheid behandel word.

Voorsitter sit voor by vergaderings van Gemeenskapsraad

74. Die Voorsitter of, in sy afwesigheid, die Ondervoorsitter, sit voor op alle vergaderings van die Gemeenskapsraad of, as sowel die Voorsitter as die Ondervoorsitter weens afwesigheid of om 'n ander rede nie op 'n vergadering kan voorsit nie, benoem die aanwesige lede onder die voorsitterskap van die Sekretaris van die Gemeenskapsraad, wat nie geregtig is om te stem nie, een van die aanwesige lede om op sodanige vergadering voor te sit: Met dien verstande dat die Voorsitter van die Raad of 'n lid van die Raad deur hom aangewys op die eerste algemene vergadering van die Gemeenskapsraad voorsit totdat 'n Voorsitter verkies is.

Bywoningsregister

75. Elke lid wat 'n vergadering van die Gemeenskapsraad bywoon, teken sy naam in die bywoningsregister wat vir dié doel gehou word.

Volgorde van werksaamhede

76. Die werksaamhede van elke vergadering van die Gemeenskapsraad word na gelang daarvan of dit nodig is, in die volgende volgorde verrig:

(a) Beskrywingsbrief;
(b) sterflys en seremoniële toesprake;
(c) aansoeke om afwesigheidsverlof;
(d) amptelike aankondigings;
(e) onbestrede mosies van die Voorsitter;
(f) notule van vorige vergadering;
(g) verslae van komitees;
(h) vrae waarvan kennis gegee is;
(i) mosies wat sedert vorige vergaderings oorstaan;
(j) versoekskrifte;
(k) nuwe mosies;
(l) ander aangeleenthede.

Werksaamhede wat by vergadering van Gemeenskapsraad behandel word

77. Geen saak wat nie in die sakelys in die beskrywingsbrief vermeld is nie, word op daardie vergadering van die Gemeenskapsraad behandel nie: Met dien verstande dat, met die toestemming van die Voorsitter, dringende sake op sodanige vergadering geopper en aan die Gemeenskapsraad voorgelê kan word.

Quorum

78. Any number of members exceeding half the number of members of the Community Council shall form a quorum.

Procedure when quorum not present

79. (1) If after the expiration of 20 minutes after the time at which any meeting of the Council is appointed to be held, a quorum is not assembled, no meeting shall take place. If the members present unanimously consent thereto, a further period, not exceeding 10 minutes, may be permitted to enable a quorum to assemble, but the members present may by a majority decision at any stage after 10 minutes past the time appointed for such meeting, request the Chairman to convene a further meeting within 10 days, at which meeting, notwithstanding the provisions of regulation 78, the members present shall form a quorum and if the Chairman complies with such request the provisions of regulation 71 shall *mutatis mutandis* apply.

(2) If during the sitting of any meeting of the Council a quorum is found not to be present no further business shall be conducted until a quorum is reassembled. Should a quorum not be present and 10 minutes elapse after the attention of the Chairman is drawn to the absence of a quorum, the meeting shall stand adjourned until a time to be decided by the Chairman.

(3) If from the number of members voting it appears that a quorum is not present the voting shall be invalid.

Adjournment of meeting

80. If for any reason whatsoever, the business to be transacted at any meeting of the Community Council cannot be completed at such meeting, the Chairman may adjourn such meeting to a date and time to be determined by the Chairman in consultation with the members.

Questions

81. A member may ask a question at any meeting of the Community Council—

(a) in connection with any matter arising out of or having a bearing on an item in the report of a committee during the discussion of such report;

(b) regarding the exercise of any of the Council's powers or performance of any of its duties or conditions within the area for which the Community Council has been established.

Notice of question, motion or petition to be given

82. (1) Notice of any question, referred to in regulation 81 (b), motion (excluding any unopposed motion of the Chairman) or petition which a member wishes to pose, move or present, as the case may be, at or to any general meeting of the Community Council shall be in writing and signed by such member and shall be forwarded to the Secretary of the Community Council who shall, subject to the provisions of subregulation (2) and regulation 84, place it on the agenda for the next ensuing general meeting.

(2) If any such question, motion or petition is received by the Secretary of the Community Council at least 10 days before the next ensuing general meeting of the

Kworum

78. Enige getal lede wat meer as die helfte van die getal lede van die Gemeenskapsraad is, vorm 'n kworum.

Prosedure wanneer kworum nie teenwoordig is nie

79. (1) Indien daar na afloop van 20 minute na die tyd waarop 'n vergadering van die Gemeenskapsraad moet begin geen kworum is nie, vind geen vergadering plaas nie. Indien die aanwesige lede dit eens is, kan 'n verdere tydperk van hoogstens 10 minute toegelaat word om 'n kworum te laat byeenkom, maar die aanwesige lede kan, deur 'n meerderheidsbeslissing, te eniger tyd na die verloop van 10 minute na die tyd waarop sodanige vergadering moet begin, die Voorsitter versoek om 'n verdere vergadering binne 10 dae te belê, en by sodanige vergadering, ondanks die bepalings van regulasie 78, maak die lede teenwoordig 'n kworum uit en indien die Voorsitter aan so 'n versoek voldoen, is die bepalings van regulasie 71 *mutatis mutandis* van toepassing.

(2) Indien daar gedurende die sitting van 'n vergadering van die Gemeenskapsraad bevind word dat 'n kworum nie teenwoordig is nie, word geen verdere sake behandel nie totdat 'n kworum opnuut byeengekom het. Indien 'n kworum nie teenwoordig is nie en 10 minute verstryk nadat die Voorsitter se aandag op die gebrek aan 'n kworum gevestig is, word die vergadering verdaag tot 'n tyd deur die Voorsitter bepaal.

(3) As dit uit die getal lede wat deelneem aan 'n stemming, blyk dat 'n kworum nie teenwoordig is nie, is die stemming ongeldig.

Verdaging van vergadering

80. Indien, om watter rede ook al, die sake wat by 'n vergadering van die Gemeenskapsraad behandel staan te word, nie by sodanige vergadering afgehandel kan word nie, kan die Voorsitter sodanige vergadering verdaag tot 'n datum en tyd wat die Voorsitter in oorleg met die lede bepaal.

Vrae

81. 'n Lid kan op 'n vergadering van die Gemeenskapsraad 'n vraag stel—

(a) oor 'n saak wat voortspruit uit of in verband staan met 'n item van die verslag van 'n komitee tydens die bespreking van sodanige verslag;

(b) betreffende die uitoefening van enige van die Gemeenskapsraad se bevoegdhede, die uitvoering van enige van sy pligte, of toestande binne die gebied waarvoor die Gemeenskapsraad ingestel is.

Wyse waarop kennisgewing van vraag, mosie of versoekskrif geskied

82. (1) Kennis van 'n vraag in regulasie 81 (b) bedoel, 'n mosie (uitgesonderd 'n onbestrede mosie van die Voorsitter) of versoekskrif wat 'n lid wil stel of indien, na gelang van die geval, op 'n vergadering van die Gemeenskapsraad moet skriftelik wees en deur sodanige lid onderteken wees en word aan die Sekretaris van die Gemeenskapsraad gestuur, en behoudens die bepalings van subregulasie (2) en regulasie 84 plaas hy dit op die sakelys van die daaropvolgende algemene vergadering.

(2) Indien sodanige vraag, mosie of versoekskrif deur die Sekretaris van die Gemeenskapsraad minstens 10 dae voor die daaropvolgende algemene vergadering van die Gemeenskapsraad ontvang is, plaas hy dit op

University of Fort Hare
Together in Excellence

Community Council he shall place it on the agenda for such meeting or otherwise he shall place it on the agenda for the next ensuing general meeting.

(3) If a member is not present to pose his question or present his petition when he is called upon to do so by the Chairman, and he has not authorised any other member to do so on his behalf, the question or petition shall lapse.

Chairman may reject certain motions, questions or petitions

83. (1) The Chairman may reject any motion, question or petition which in his opinion will lead to the discussion of a matter already included in the agenda or which does not concern the area for which the Community Council has been established or over which the Council has no jurisdiction or which is not clear and he shall reject any motion or petition which, if it were to be moved or accepted, as the case may be, would be against the law.

(2) If the Chairman so rejects any motion, question or petition he shall inform the Community Council of his decision and shall not call upon the member concerned to move such motion, pose such question or present such petition, as the case may be.

Motion to rescind a resolution passed during the previous three months

84. No motion to rescind a resolution passed by the Community Council during the previous three months or having the same effect as one that has been rejected by the Community Council during the previous three months shall be placed on the agenda unless the notice of such motion is signed by at least three members in addition to the member who wishes to move such motion and after the Community Council has dealt with such motion no member may move a similar motion within six months thereafter.

Procedure on moving a motion

85. (1) When motions come up for discussion, the Chairman shall, subject to the provisions of regulation 83, read out the numbers and names of the movers of all the motions appearing on the agenda and he shall ascertain which motions are unopposed and such unopposed motions shall immediately be carried.

(2) Immediately after such unopposed motions have been carried the Chairman shall, in the order in which the remaining motions appear on the agenda, call upon the members concerned to move such motions.

(3) A member called upon by the Chairman to move a motion shall rise in his place and after making such remarks as he may wish he shall move the motion.

(4) If a member is not present to move a motion when called upon to do so by the Chairman, and he has not authorised any other member to do so on his behalf, the motion shall lapse.

(5) Every motion moved shall require seconding and if a motion is not seconded it shall lapse.

(6) When a motion has been moved and seconded, the Chairman shall read it or cause it to be read after which debate may take place on such motion and may continue, subject to the provisions of these Regulations, for as long as any member who is entitled to speak wishes to speak.

die sakelys vir sodanige vergadering, of anders plaas hy dit op die sakelys van die daaropvolgende algemene vergadering.

(3) As 'n lid nie teenwoordig is om sy vraag te stel of sy versoekskrif in te dien nie wanneer hy deur die Voorsitter versoek word om dit te doen en hy nie 'n ander lid gemagtig het om dit namens hom te stel of in te dien nie, verval die vraag of versoekskrif.

Voorsitter kan sekere mosies, vrae of versoekskrifte verwerp

83. (1) Die Voorsitter kan 'n mosie, vraag of versoekskrif verwerp wat na sy mening tot die bespreking sou lei van 'n saak wat reeds in die sakelys vervat is of wat nie op die gebied waarvoor die Gemeenskapsraad ingestel is betrekking het nie of waaroor die Gemeenskapsraad nie regsbevoegdheid het nie of wat nie duidelik is nie, en hy verwerp 'n mosie of versoekskrif wat, as dit voorgestel of aangeneem word, na gelang van die geval, strydig sal wees met die wet.

(2) Indien die Voorsitter 'n mosie vraag of versoekskrif aldus verwerp, stel hy die Gemeenskapsraad in kennis van sy beslissing en hy versoek nie die betrokke lid om sodanige mosie in te dien, sodanige vraag te stel of sodanige versoekskrif in te dien nie, na gelang van die geval.

Mosie ter herroeping van 'n besluit geneem binne voorafgaande drie maande

84. Geen mosie ter herroeping van 'n besluit wat gedurende die voorafgaande drie maande geneem is of 'n mosie van dieselfde strekking as een wat binne die voorafgaande drie maande deur die Gemeenskapsraad verwerp is, word op die sakelys geplaas nie, tensy die kennisgewing van die mosie deur minstens drie lede, benewens die voorsteller van die mosie, onderteken is, en nadat die Gemeenskapsraad sodanige mosie afgehandel het, mag geen lid weer 'n soortgelyke mosie binne ses maande daarna indien nie.

Prosedure by die indiening van 'n mosie

85. (1) Wanneer mosies aan die orde kom, lees die Voorsitter, behoudens die bepalings van regulasie 83, die nommers en die name uit van die voorstellers van al die mosies wat op die sakelys verskyn, en hy stel vas watter mosies onbestrede is, en sodanige onbestrede mosies word dadelik aangeneem.

(2) Onmiddellik nadat sodanige onbestrede mosies aangeneem is, versoek die Voorsitter die betrokke lede, beurtelings in die volgorde waarin die oorblywende mosies op die sakelys verskyn, om sodanige mosies in te dien.

(3) 'n Lid wat deur die Voorsitter versoek word om 'n mosie in te dien, staan in sy plek op en na enige opmerkings wat hy wens te maak, dien hy die mosie in.

(4) As 'n lid nie teenwoordig is nie om sy mosie in te dien wanneer hy deur die Voorsitter versoek word om dit te doen en hy nie 'n ander lid gemagtig het om dit namens hom in te dien nie, verval die mosie.

(5) Elke mosie ingedien moet gesekondeer word, en as 'n mosie nie gesekondeer word nie, verval dit.

(6) Wanneer 'n mosie ingedien is en gesekondeer is, lees die Voorsitter dit uit, of laat dit uitlees, waarna sodanige mosie gedebatteer kan word en die debat kan, behoudens die bepalings van hierdie Regulasies, so lank aanhou as wat enige lid wat die reg het om te praat, nog wil praat.

Community Council he shall place it on the agenda for such meeting or otherwise he shall place it on the agenda for the next ensuing general meeting.

(3) If a member is not present to pose his question or present his petition when he is called upon to do so by the Chairman, and he has not authorised any other member to do so on his behalf, the question or petition shall lapse.

Chairman may reject certain motions, questions or petitions

83. (1) The Chairman may reject any motion, question or petition which in his opinion will lead to the discussion of a matter already included in the agenda or which does not concern the area for which the Community Council has been established or over which the Council has no jurisdiction or which is not clear and he shall reject any motion or petition which, if it were to be moved or accepted, as the case may be, would be against the law.

(2) If the Chairman so rejects any motion, question or petition he shall inform the Community Council of his decision and shall not call upon the member concerned to move such motion, pose such question or present such petition, as the case may be.

Motion to rescind a resolution passed during the previous three months

84. No motion to rescind a resolution passed by the Community Council during the previous three months or having the same effect as one that has been rejected by the Community Council during the previous three months shall be placed on the agenda unless the notice of such motion is signed by at least three members in addition to the member who wishes to move such motion and after the Community Council has dealt with such motion no member may move a similar motion within six months thereafter.

Procedure on moving a motion

85. (1) When motions come up for discussion, the Chairman shall, subject to the provisions of regulation 83, read out the numbers and names of the movers of all the motions appearing on the agenda and he shall ascertain which motions are unopposed and such unopposed motions shall immediately be carried.

(2) Immediately after such unopposed motions have been carried the Chairman shall, in the order in which the remaining motions appear on the agenda, call upon the members concerned to move such motions.

(3) A member called upon by the Chairman to move a motion shall rise in his place and after making such remarks as he may wish he shall move the motion.

(4) If a member is not present to move a motion when called upon to do so by the Chairman, and he has not authorised any other member to do so on his behalf, the motion shall lapse.

(5) Every motion moved shall require seconding and if a motion is not seconded it shall lapse.

(6) When a motion has been moved and seconded, the Chairman shall read it or cause it to be read after which debate may take place on such motion and may continue, subject to the provisions of these Regulations, for as long as any member who is entitled to speak wishes to speak.

die sakelys vir sodanige vergadering, of anders plaas hy dit op die sakelys van die daaropvolgende algemene vergadering.

(3) As 'n lid nie teenwoordig is om sy vraag te stel of sy versoekskrif in te dien nie wanneer hy deur die Voorsitter versoek word om dit te doen en hy nie 'n ander lid gemagtig het om dit namens hom te stel of in te dien nie, verval die vraag of versoekskrif.

Voorsitter kan sekere mosies, vrae of versoekskrifte verwerp

83. (1) Die Voorsitter kan 'n mosie, vraag of versoekskrif verwerp wat na sy mening tot die bespreking sou lei van 'n saak wat reeds in die sakelys vervat is of wat nie op die gebied waarvoor die Gemeenskapsraad ingestel is betrekking het nie of waaroor die Gemeenskapsraad nie regsbevoegdheid het nie of wat nie duidelik is nie, en hy verwerp 'n mosie of versoekskrif wat, as dit voorgestel of aangeneem word, na gelang van die geval, strydig sal wees met die wet.

(2) Indien die Voorsitter 'n mosie vraag of versoekskrif aldus verwerp, stel hy die Gemeenskapsraad in kennis van sy beslissing en hy versoek nie die betrokke lid om sodanige mosie in te dien, sodanige vraag te stel of sodanige versoekskrif in te dien nie, na gelang van die geval.

Mosie ter herroeping van 'n besluit geneem binne voorafgaande drie maande

84. Geen mosie ter herroeping van 'n besluit wat gedurende die voorafgaande drie maande geneem is of 'n mosie van dieselfde strekking as een wat binne die voorafgaande drie maande deur die Gemeenskapsraad verwerp is, word op die sakelys geplaas nie, tensy die kennisgewing van die mosie deur minstens drie lede, benewens die voorsteller van die mosie, onderteken is, en nadat die Gemeenskapsraad sodanige mosie afgehandel het, mag geen lid weer 'n soortgelyke mosie binne ses maande daarna indien nie.

Prosedure by die indiening van 'n mosie

85. (1) Wanneer mosies aan die orde kom, lees die Voorsitter, behoudens die bepalings van regulasie 83, die nommers en die name uit van die voorstellers van al die mosies wat op die sakelys verskyn, en hy stel vas watter mosies onbestrede is, en sodanige onbestrede mosies word dadelik aangeneem.

(2) Onmiddellik nadat sodanige onbestrede mosies aangeneem is, versoek die Voorsitter die betrokke lede, beurtelings in die volgorde waarin die oorblywende mosies op die sakelys verskyn, om sodanige mosies in te dien.

(3) 'n Lid wat deur die Voorsitter versoek word om 'n mosie in te dien, staan in sy plek op en na enige opmerkings wat hy wens te maak, dien hy die mosie in.

(4) As 'n lid nie teenwoordig is nie om sy mosie in te dien wanneer hy deur die Voorsitter versoek word om dit te doen en hy nie 'n ander lid gemagtig het om dit namens hom in te dien nie, verval die mosie.

(5) Elke mosie ingedien moet gesekondeer word, en as 'n mosie nie gesekondeer word nie, verval dit.

(6) Wanneer 'n mosie ingedien is en gesekondeer is, lees die Voorsitter dit uit, of laat dit uitlees, waarna sodanige mosie gedebatteer kan word en die debat kan, behoudens die bepalings van hierdie Regulasies, so lank aanhou as wat enige lid wat die reg het om te praat, nog wil praat.

(7) When no more members wish or are entitled to speak the Chairman shall put the motion to the Community Council for its decision.

(8) When an amendment or amendments have been proposed to a motion the Chairman shall first put the amendments and after all amendments have been disposed of, again read and put the original motion or if it has been amended the motion as amended, so as to enable the members of the Community Council to be fully acquainted with the terms thereof.

(9) The order in which amendments shall be put shall be in the discretion of the Chairman.

(10) No member may speak on a motion or amendment after it has been fully put by the Chairman.

Amendments to motions

86. (1) A member who has risen to speak on a motion may propose an amendment to such motion.

(2) Such amendment shall require seconding.

(3) An amendment may take one of the following forms:

(a) To leave out one or more words of the motion;

(b) to insert one or more words in the motion;

(c) to add one or more words at the end of the motion;

(d) to substitute certain other words for certain words contained in the motion.

(4) Members may propose more than one amendment to a motion but a proposal to further amend a proposed amendment shall be out of order.

(5) Debate may take place on any amendment to a motion.

Postponement of motions

87. (1) Any member may move that a motion be postponed or referred to a committee of the Community Council for consideration.

(2) Such motion shall be seconded.

(3) Notwithstanding the provisions of regulation 97 (2), the mover of such motion shall speak for not more than five minutes and the seconder shall not be permitted to speak beyond formally seconding it.

(4) Immediately after such motion has been seconded the Chairman shall put the motion to the Community Council for its decision.

Withdrawal of motions and amendments

88. A motion or an amendment proposed to such motion may be withdrawn at the request of the mover thereof by leave of the Community Council at any time before the question has been fully put.

Moving reports at meetings of Community Council

89. (1) All recommendations of any committee shall be reported to the Council and the Chairman of the committee concerned or in his absence a member of the committee called upon by the Chairman of the Council, shall introduce the report by moving that the report of the committee concerned be received.

(2) The Council having agreed to receive the report, the Chairman of the Community Council shall thereupon put the recommendations contained in the various items *seriatim*, unless for good cause he sees fit to vary

(7) Wanneer daar nie meer lede is wat wens, of geregtig is, om te praat nie, stel die Voorsitter die mosie aan die Gemeenskapsraad vir beslissing.

(8) Wanneer 'n amendement of amendemente op 'n mosie voorgestel is, stel die Voorsitter eers die amendemente en na al die amendemente afgehandel is, lees en stel hy weer die oorspronklike mosie of, indien dit gewysig is, die mosie, soos gewysig, ten einde die lede van die Gemeenskapsraad ten volle vertroud te maak met die bepalings daarvan.

(9) Die volgorde waarin amendemente gestel word, is volgens die diskresie van die Voorsitter.

(10) Geen lid mag oor 'n mosie of 'n amendement praat nadat dit ten volle deur die Voorsitter gestel is nie.

Amendemente op mosies

86. (1) 'n Lid wat opgestaan het om 'n mosie te bespreek, kan 'n amendement op die mosie voorstel.

(2) Sodanige amendement moet gesekondeer word.

(3) 'n Amendement kan een van die volgende vorme aanneem:

(a) Om een of meer van die woorde van die mosie weg te laat;

(b) om een of meer woorde in die mosie in te voeg;

(c) om een of meer woorde aan die einde van die mosie by te voeg;

(d) om sekere woorde van die mosie deur sekere ander woorde te vervang.

(4) Lede kan meer as een amendement op 'n mosie voorstel, maar 'n voorstel vir die verdere wysiging van 'n voorgestelde amendement is buite die orde.

(5) 'n Amendement op 'n mosie kan gedebateer word.

Uitstel van mosies

87. (1) 'n Lid kan voorstel dat 'n mosie uitgestel of na 'n komitee van die Gemeenskapsraad verwys word vir oorweging.

(2) Sodanige voorstel moet gesekondeer word.

(3) Ondanks die bepalings van regulasie 97 (2), kan die indiener van sodanige voorstel hoogstens vyf minute lank praat en die sekondant word nie toegelaat om te praat nie buiten om dit formeel te sekondeer.

(4) Onmiddellik nadat sodanige voorstel gesekondeer is, stel die Voorsitter die voorstel aan die Gemeenskapsraad vir beslissing.

Terugtrekking van mosies en amendemente

88. 'n Mosie of 'n voorgestelde amendement van sodanige mosie kan te eniger tyd voordat die mosie ten volle gestel is, teruggetrek word op versoek van die voorsteller daarvan met die verlof van die Gemeenskapsraad.

Indiening van verslae op vergaderings van Gemeenskapsraad

89. (1) Verslag oor alle aanbevelings van 'n komitee word aan die Gemeenskapsraad gedoen en die Voorsitter van die betrokke komitee, of in sy afwesigheid 'n lid van die komitee deur die Voorsitter van die Gemeenskapsraad aangewê, dien die verslag in deur voor te stel dat die verslag van die betrokke komitee in ontvangs geneem word.

(2) Nadat die Gemeenskapsraad besluit het om die verslag in ontvangs te neem, stel die Voorsitter van die Gemeenskapsraad die aanbevelings vervat in die verskillende items *seriatim*, tensy hy goeddunk om hul volgorde te verander. Indien die meerderheid van die

University of Pretoria
Together in Excellence

their order. If the majority of the members of the Council present agree with any recommendation it shall forthwith become a resolution of the Council.

Item to be referred back for further consideration

90. (1) When the report of any committee has been received by the Council and a recommendation in that report is before the Council, any member may move that the item be referred back to such committee for further consideration.

(2) If such motion is carried, the debate on the recommendation shall end forthwith.

Chairman to maintain order

91. Order shall be maintained in the Community Council by the Chairman whose decision on a point of order shall not be open to appeal and shall not be reviewed by the Community Council.

Members to sit down when Chairman rises

92. When the Chairman rises during a meeting of the Community Council every member shall sit down and members shall be silent so that the Chairman may be heard without interruption.

Members to speak standing

93. A member shall speak standing and shall address his observations to the Chair.

Chairman to select speaker

94. If two or more members rise at the same time to speak the Chairman shall select one member and call on him to speak.

Members not speaking to be seated

95. When a member has finished speaking he shall resume his seat and any other member wishing to speak shall rise.

Matters on which members may speak

96. A member may address the Community Council on the question before the Council or upon any amendment proposed thereto, or upon a question or amendment to be proposed by himself, or upon a point of order arising out of debate, but not otherwise and no discussion or debate shall be permitted which will anticipate any matter on the agenda.

Speaking on questions at meetings of Community Council

97. (1) No member shall address the Community Council more than once on the question before the Community Council except in explanation, such explanation being allowed only in case a material part of his speech has been misquoted or misunderstood, and he shall not introduce any new matter and no debate shall be allowed on such explanation.

(2) No member may, without the approval of the Community Council, exceed 10 minutes in speaking on any question.

(3) Notwithstanding the provisions of subregulation (1), the member who introduced the question may reply and such member having so replied, the debate shall be closed and the question put to the vote.

Form of address

98. During proceedings at a meeting of the Community Council members shall refer to one another as "the honourable member" (stating the member's name).

aanwesige lede van die Gemeenskapsraad 'n aanbeveling aanvaar, word dit onverwyld 'n besluit van die Gemeenskapsraad.

Item kan terugverwys word vir verdere oorweging

90. (1) Wanneer die verslag van 'n komitee deur die Gemeenskapsraad in ontvangs geneem is en 'n aanbeveling van sodanige verslag voor die Gemeenskapsraad dien, kan 'n lid voorstel dat die item na sodanige komitee terugverwys word vir verdere oorweging.

(2) As sodanige voorstel aangeneem word, eindig die debat oor die aanbeveling onverwyld.

Voorsitter handhaaf orde

91. Orde word in die Gemeenskapsraad deur die Voorsitter gehandhaaf en sy beslissing oor 'n punt van orde is nie onderworpe aan appèl nie en word nie deur die Gemeenskapsraad hersien nie.

Lede moet sit wanneer Voorsitter opstaan

92. Wanneer die Voorsitter gedurende 'n vergadering van die Gemeenskapsraad opstaan, sit elke lid en lede bly stil sodat die Voorsitter ongestoord gehoor kan word.

Lede praat staande

93. Elke lid staan as hy praat en rig sy opmerkings tot die Stoel.

Voorsitter kies spreker

94. Indien twee of meer lede gelyk opstaan om te praat, kies die Voorsitter een lid en versoek hom om te praat.

'n Lid wat nie praat nie, moet sit

95. 'n Lid wat klaar gepraat het, moet sit en enige ander lid wat wil praat, moet opstaan.

Sake waaroor lede kan praat

96. 'n Lid kan oor die mosie voor die Gemeenskapsraad praat of oor amendemente daarop voorgestel, of oor 'n mosie of amendement wat hy self wil voorstel, of oor 'n punt van orde voortspruitende uit die debat, maar anders nie en geen bespreking of debat wat 'n saak wat op die sakelys voorkom, sal vooruitloop, word toegelaat nie.

Die praat oor onderwerpe op vergaderings van Gemeenskapsraad

97. (1) Geen lid spreek die Gemeenskapsraad meer as een maal oor 'n mosie voor die Gemeenskapsraad toe nie, behalwe by wyse van verduideliking, welke verduideliking toegelaat word slegs ingeval 'n wesentlike deel van 'n lid se toespraak verkeerd aangehaal of misverstaan is en hy mag geen nuwe aangeleentheid behandel nie en oor sodanige verduideliking word geen debat toegelaat nie.

(2) Geen lid praat sonder die toestemming van die Gemeenskapsraad langer as 10 minute oor enige mosie nie.

(3) Ondanks die bepalings van subregulasie (1), kan die lid wat 'n mosie ingedien het, repliek lewer en nadat sodanige lid sodanige repliek gelewer het, is die debat gesluit en word die mosie in stemming gebring.

Aanspreekvorm

98. Gedurende verrigtings by 'n vergadering van die Gemeenskapsraad verwys lede na mekaar as "die agbare lid" (die naam van lid moet gemeld word).

University of Fort Hare
Together in Excellence

Conduct of members during meetings

99. During a meeting of the Community Council a member shall—

(a) enter or leave the Chamber with decorum;

(b) in the case of a male, be bare-headed while in the Chamber and bow to the Chair when entering or leaving the Chamber or passing to or from his place;

(c) not pass between the Chair and any member speaking;

(d) not address the Chairman by name or any other title save as "Mr Chairman";

(e) not cross the floor of the Chamber unnecessarily;

(f) when crossing from one side of the Chamber to the other, pause in the centre and bow to the Chair;

(g) not read newspapers, books, letters or other documents except such matter therein as may be directly connected with the business then under consideration;

(h) while a member is speaking be silent and not make unseemly interruptions;

(i) when called to order by the Chairman immediately resume his seat; and

(j) when the Community Council adjourns keep his place until the Chairman has left the Chair.

Speeches to be relevant

100. A member shall restrict his observations to the subject under discussion and shall not introduce matters irrelevant to that subject.

Irrelevance or repetition

101. The Chairman after having called the attention of the Community Council to the conduct of a member who persists in irrelevance or tedious repetition of his own or some other member's arguments in debate, may order him to discontinue his speech and resume his seat.

When interruption may be made

102. A member shall not interrupt the speech of any other member except—

(a) by rising to a point of order, when the member speaking shall resume his seat and the member interrupting shall merely direct attention to the point which he wishes to bring to notice and submit it to the Chairman for decision; or

(b) to put a relevant question to the speaker with the consent of the Chairman.

Insulting language out of order

103. It shall be out of order to use offensive and insulting language about members of the Community Council.

Imputation of improper motives out of order

104. A member shall not impute improper motives to any other member.

Personal charges out of order

105. A member shall not make a personal charge in reference to any other member.

Offensive expressions about Community Council out of order

106. A member shall not use offensive expressions about the conduct of proceedings at meetings of the Community Council.

Gedrag van lede tydens vergaderings

99. Gedurende vergaderings van die Gemeenskapsraad moet 'n lid—

(a) die Raadsaal met dekorum binnekom of verlaat;

(b) in die geval van 'n man, blootshoof wees terwyl hy in die Raadsaal is en 'n buiging voor die Stoel maak wanneer hy die Raadsaal binnekom of verlaat, of wanneer hy na of van sy sitplek gaan;

(c) nie tussen die Stoel en 'n lid wat aan die woord is, verbygaan nie;

(d) nie die Voorsitter by sy naam of enige ander titel as "Meneer die Voorsitter" aanspreek nie;

(e) nie onnodig oor die vloer van die Raadsaal stap nie;

(f) wanneer hy van een deel van die Raadsaal na 'n ander gaan, in die middel stilstaan en 'n buiging voor die Stoel maak;

(g) nie nuusblaaie, boeke, briewe of ander dokumente lees nie, uitgesonderd sodanige stof daarin as wat regstreeks in verband staan met die aangeleentheid dan onder oorweging;

(h) stilbly terwyl 'n lid aan die woord is, en hom nie onnodig in die rede val nie;

(i) wanneer hy deur die Voorsitter tot orde geroep is, dadelik gaan sit; en

(j) wanneer die Gemeenskapsraad verdaag, in sy sitplek bly totdat die Voorsitter die Stoel verlaat het.

Toesprake moet ter sake wees

100. 'n Lid moet sy opmerkings oor die onderwerp in bespreking beperk, en mag geen sake wat nie op daardie onderwerp betrekking het nie, byhaal nie.

Ontoepaslikheid of herhaling

101. Nadat die Voorsitter die aandag van die Gemeenskapsraad gevestig het op die gedrag van 'n lid wat volhou om aangeleenthede wat nie ter sake is nie te bespreek of om sy eie argumente of dié van 'n ander lid in die debat tot vervelens toe te herhaal, kan hy die lid gelas om sy toespraak te staak en sy sitplek in te neem.

Wanneer lede in die rede geval mag word

102. Geen lid mag 'n ander lid wat aan die woord is, in die rede val nie, behalwe—

(a) wanneer hy op 'n punt van orde opstaan, en dan moet die lid wat aan die woord was, gaan sit, en die lid wat opgestaan het, moet slegs die punt noem waarop hy die aandag wil vestig en dit aan die Voorsitter voorlê vir sy beslissing; of

(b) om 'n tersaaklike vraag aan die spreker te stel met die toestemming van die Voorsitter.

Beledigende taal buite die orde

103. Dit is buite die orde om aanstootlike en beledigende taal omtrent lede van die Gemeenskapsraad te gebruik.

Toeskrywe van onbehoorlike motiewe buite die orde

104. 'n Lid mag nie onbehoorlike motiewe aan 'n ander lid toeskryf nie.

Persoonlike aanvalle buite die orde

105. 'n Lid mag nie 'n persoonlike aanval ten opsigte van enige ander lid maak nie.

Aanstootlike uitdrukkings omtrent Gemeenskapsraad buite die orde

106. 'n Lid mag nie aanstootlike uitdrukkings oor die bestuur van verrigtings by vergaderings van die Gemeenskapsraad gebruik nie.

University of Pretoria
Together in Excellence

Alleged improper conduct

107. The personal conduct or any alleged improper motives of a member shall not be referred to except on a motion moved for that purpose.

Disorderly conduct of members

108. The Chairman shall order a member whose conduct is grossly disorderly or who fails to comply with an order made under regulation 101, to withdraw forthwith from the Chamber for the remainder of the meeting and should he fail to do so the Chairman may cause him to be ejected from the Chamber and take such reasonable steps as are necessary to ensure that such member does not return to the meeting.

Chairman's powers to adjourn or suspend meeting of Community Council

109. In the case of great disorder arising during a meeting of the Community Council the Chairman may adjourn or suspend the meeting for such reasonable period as he may determine.

Appointment of committees of Community Council

110. (1) Any committee of the Community Council shall be appointed by the Council at a meeting of the Council.

(2) The Community Council shall determine the terms of reference and the powers and duties of such committee at such meeting: Provided that it may from time to time at any meeting thereof amend such terms of reference and add to or withdraw any such powers and duties.

(3) Members of a committee to which the Community Council has assigned any of its powers and duties shall remain in office until the day before the day fixed for the holding of the next ensuing general meeting referred to in regulation 65.

Constitution of committees of Community Council

111. A committee shall consist of not less than three and not more than seven members of the Community Council.

Chairman of committee

112. The Community Council shall appoint the chairman of every committee: Provided that if such chairman is unable to be present at any meeting of such committee the committee shall, from their own ranks, elect another chairman whose tenure of office shall be for the day of his election.

Meetings of committees of Community Council

113. (1) A committee shall meet on the date and at the time determined by the chairman thereof in consultation with the members thereof.

(2) The meetings of any committee shall be held in private unless the committee otherwise orders: Provided that this provision shall not be so interpreted as to exclude officials or witnesses necessarily associated with the business of such committee.

(3) Notwithstanding the provisions of subregulation (2), members of the Community Council who are not members of a particular committee thereof may be present at any meeting of such committee and take part in the discussion, but shall not have the power to vote.

Beweerde onbehoorlike gedrag

107. Daar mag nie verwys word na die persoonlike gedrag of enige beweerde onbehoorlike motiewe van 'n lid nie, behalwe na 'n mosie vir daardie doel ingedien.

Wanordelike gedrag van lid

108. Die Voorsitter gelas 'n lid wie se gedrag uiters wanordelik is of wat versuim om te voldoen aan 'n opdrag gegee kragtens regulasie 101, om die Raadsaal onverwyld vir die res van die vergadering te verlaat en as hy versuim om dit te doen, kan die Voorsitter hom uit die Raadsaal laat verwyder en sodanige redelike stappe doen as wat nodig is om te verseker dat sodanige lid nie na die vergadering terugkeer nie.

Voorsitter se bevoegdhede om vergadering van Gemeenskapsraad te verdaag of op te skort

109. Ingeval groot wanordelikheid gedurende 'n vergadering van die Gemeenskapsraad ontstaan, kan die Voorsitter die vergadering verdaag of opskort vir 'n redelike tydperk deur hom bepaal.

Aanstelling van komitees van Gemeenskapsraad

110. (1) 'n Komitee van die Gemeenskapsraad word aangestel op 'n vergadering van die Gemeenskapsraad.

(2) Die Gemeenskapsraad bepaal die opdragte aan en die bevoegdhede en pligte van sodanige komitee op sodanige vergadering: Met dien verstande dat dit van tyd tot tyd op 'n vergadering daarvan sodanige opdragte kan wysig en tot sodanige bevoegdhede en pligte byvoeg of enige sodanige bevoegdhede en pligte intrek.

(3) Lede van 'n komitee waaraan die Gemeenskapsraad enige van sy bevoegdhede en pligte opgedra het, beklee hul ampte tot die dag wat die dag wat bepaal is vir die hou van die daaropvolgende algemene vergadering in regulasie 65 bedoel, voorafgaan.

Samestelling van komitees van Gemeenskapsraad

111. 'n Komitee bestaan uit minstens drie en hoogstens sewe lede van die Gemeenskapsraad.

Voorsitter van komitee

112. Die Gemeenskapsraad stel die voorsitter van elke komitee aan: Met dien verstande dat indien sodanige voorsitter nie in staat is om teenwoordig te wees op 'n vergadering van sodanige komitee nie, verkies die komitee uit die geledere 'n ander voorsitter wie se ampstermyn die dag van sy verkiesing is.

Vergaderings van komitees van Gemeenskapsraad

113. (1) 'n Komitee sit op die datum en tyd deur die voorsitter daarvan bepaal in oorleg met die lede daarvan.

(2) Die vergaderings van 'n komitee is privaat, tensy die komitee anders gelas: Met dien verstande dat hierdie bepaling nie uitgelê word as sou dit beamptes of getuies wat noodsaaklikerwys geassosieer is met die werksaamhede van sodanige komitee uitsluit nie.

(3) Ondanks die bepalings van subregulasie (2), kan lede van die Gemeenskapsraad wat nie lede is van 'n besondere komitee daarvan nie, teenwoordig wees by 'n vergadering van sodanige komitee en aan die bespreking deelneem, maar hulle het nie die reg om te stem nie.

Quorum

114 Any number of members exceeding half the number of the members of any committee shall form a quorum.

Procedure when quorum not present

115. (1) If after the expiration of 20 minutes after the time at which any meeting of any committee is appointed to be held, a quorum is not assembled, no meeting shall take place. If the members of the committee present unanimously consent thereto, a further period, not exceeding 10 minutes, may be permitted to enable a quorum to assemble, but the members present may be a majority decision at any stage, after 10 minutes past the time appointed for such meeting, request the chairman to convene a further meeting within seven days, at which meeting, notwithstanding the provisions of regulation 114, the members present shall form a quorum.

(2) If during the sitting of any meeting of a committee a quorum is found not to be present no further business shall be conducted until a quorum is reassembled. Should a quorum not be present and 10 minutes elapse after the attention of the chairman is drawn to the absence of a quorum, the meeting shall stand adjourned until a time to be determined by the chairman in consultation with the members thereof present.

(3) If from the number of members voting it appears that a quorum is not present the voting shall be invalid.

How question before Community Council or committee is to be decided

116. All questions before the Community Council or any committee of the Community Council shall be determined by a majority of votes of the members present and in the case of an equality of votes the chairman of the meeting shall have a second or casting vote.

Mode of putting question for decision

117. When the Chairman or chairman of a committee, as the case may be, puts a question for decision, he shall do so by saying: "All agreed?" and if any member says "No" he shall order that a ballot be taken by show of hands and shall then total the number of votes cast for and against the question and declare the number to the Council or committee, as the case may be.

Minutes of meetings

118. (1) The Secretary of the Community Council shall cause the minutes of the proceedings at any meeting of the Community Council and meetings of any committee of the Community Council to be recorded and there shall be noted in such minutes the names of every member and official present.

(2) Such minutes shall be confirmed at the next ensuing general meeting of the Community Council or the next ensuing meeting of such committee and the Chairman or the chairman of the committee, as the case may be, shall thereafter sign them.

(3) If a copy of such minutes has been sent to each member at least two days prior to the meetings referred to in subregulation (2), such minutes shall be taken as read with a view to confirmation.

(4) No motion, proposal or discussion shall be allowed on the minutes, except as to their accuracy.

Kworum

114. Enige getal lede wat meer as die helfte van die getal lede van 'n komitee is, vorm 'n kworum.

Prosedure wanneer kworum nie teenwoordig nie

115. (1) Indien daar na verloop van 20 minute na die tyd waarop 'n vergadering van 'n komitee moet begin geen kworum is nie, vind geen vergadering plaas nie. Indien die aanwesige lede van die komitee dit eens is, kan 'n verdere tydperk van hoogstens 10 minute toegelaat word om 'n kworum te laat byeenkom, maar die aanwesige lede kan, deur 'n meerderheidsbeslissing te eniger tyd na verloop van 10 minute na die tyd waarop sodanige vergadering moet begin, die voorsitter versoek om 'n verdere vergadering binne sewe dae te belê, en by sodanige vergadering, ondanks die bepalings van regulasie 114, maak die lede teenwoordig 'n kworum uit.

(2) Indien daar gedurende die sitting van 'n vergadering van 'n komitee bevind word dat 'n kworum nie teenwoordig is nie, word geen verdere sake behandel nie totdat 'n kworum opnuut byeengekom het. Indien 'n kworum nie teenwoordig is nie en 10 minute verstryk nadat die voorsitter se aandag op die gebrek aan 'n kworum gevestig is, word die vergadering verdaag tot 'n tyd deur die voorsitter in oorleg met die aanwesige lede daarvan bepaal.

(3) As dit uit die getal lede wat deelneem aan 'n stemming, blyk dat 'n kworum nie teenwoordig is nie, is die stemming ongeldig.

Hoe mosie voor Gemeenskapsraad of komitee beslis word

116. Alle mosies voor die Gemeenskapsraad of 'n komitee van die Gemeenskapsraad word beslis deur 'n meerderheid van stemme van die aanwesige lede en by 'n staking van stemme het die voorsitter van die vergadering 'n tweede of beslissende stem.

Wyse waarop mosie vir beslissing voorgelê word

117. Wanneer die Voorsitter of die voorsitter van 'n komitee, na gelang van die geval, 'n mosie vir beslissing voorlê, doen hy dit deur te sê: "Stem almal saam?" en indien enige lid "Nee" sê, gelas hy 'n stemming deur die opsteek van hande en hy tel die getal stemme uitgebring vir en teen die mosie en daarna maak hy die getalle bekend aan die Gemeenskapsraad of komitee, na gelang van die geval.

Notule van vergaderings

118. (1) Die Sekretaris van die Gemeenskapsraad laat die notule van die verrigtings van 'n vergadering van die Gemeenskapsraad en vergaderings van 'n komitee van die Gemeenskapsraad hou en die naam van elke lid en beampte aanwesig word in sodanige notule aangeteken.

(2) Sodanige notule word bekragtig by die daaropvolgende algemene vergadering van die Gemeenskapsraad of die daaropvolgende vergadering van sodanige komitee en daarna onderteken die Voorsitter of die voorsitter van die komitee, na gelang van die geval, die notule.

(3) Indien 'n afskrif van sodanige notule minstens twee dae voor die vergaderings in subregulasie (2) bedoel aan elke lid gestuur is, word aanvaar dat sodanige notules met die oog op bekragtiging gelees is.

(4) Geen mosie, voorstel of bespreking ten opsigte van die notule, behalwe wat die juistheid daarvan betref, word toegelaat nie.

CONT

IN LUMINE TUO VIDEBIMUS LUMEN
University of Fort Hare
Together in Excellence

CHAPTER 7
GENERAL

Member to look after interests of ward he represents

119. In addition to any other duties imposed on a member of the Community Council, such member shall, on behalf of the ward he represents and within the area for which the Community Council has been established look after the interests of such ward and keep the residents of the ward concerned informed of, and advise such residents regarding, matters affecting the general interest of the persons residing in such ward or area.

Provisions as to members being interested in contracts with the Community Council

120. No member of the Community Council shall, either on his own behalf or on behalf of a partnership in which he is interested, be concerned in or interested in any transaction, contract or arrangement whatsoever made by or with the Community Council with the exception of the purchase and sale or hiring of sites, premises or buildings.

Member not to have financial interest in matter before meeting

121. A member of the Community Council shall, at any meeting of the Community Council or any committee thereof, not be present during the discussion of or the voting on any matter in which either he, his spouse, his partner, the partner of his spouse, his employer (except the State) or the employer (except the State) of his spouse has a direct or indirect financial interest.

Payment of members

122. There shall be payable to members of the Community Council such allowances as the Minister after consultation with the Community Council and the Board shall determine.

General penalty

123. Any person who is convicted of an offence in terms of these Regulations shall be liable to a fine not exceeding R200 or, in default of payment, imprisonment for a period not exceeding six months.

Certain provisions applicable to persons referred to in section 3 (6) of the Act

124. The provisions of regulations 92 to 96 inclusive, and 98 to 106 inclusive, shall *mutatis mutandis* apply to any person referred to in section 3 (6) of the Act.

ANNEXURE A
COMMUNITY COUNCIL

Nomination of candidate for election of a member of the Community Council for ward.....

We, the undersigned....., registered as voters in ward....., hereby nominate (name of candidate)..... for election as a member of the..... Community Council for ward.....

Name (to be printed)	Identity document number	Address	Signature
1.			
2.			
3.			
4.			
5.			
6.			
7.			
8.			
9.			
10.			

HOOFSTUK 7
ALGEMEEN

Lid behartig belange van wyk wat hy verteenwoordig

119. Benewens enige ander pligte aan 'n lid van die Gemeenskapsraad opgedra, moet 'n lid namens die wyk wat hy verteenwoordig die belange van daardie wyk binne die gebied waarvoor die Gemeenskapsraad ingestel is behartig en die inwoners van die betrokke wyk ingelig hou van en adviseer oor aangeleenthede rakende die algemene belang van die persone wat in sodanige wyk of gebied woon.

Bepalings aangaande lede wat belang het by kontrakte met Gemeenskapsraad

120. Geen lid van die Gemeenskapsraad mag òf vir homself òf namens 'n vennootskap waarin hy 'n belang het, betrokke wees by of 'n belang hê in enige transaksie, kontrak of reëling hoegenaamd aangegaan deur of met die Gemeenskapsraad, met uitsondering van die koop en verkoop of verhuur van persele of geboue.

Lid mag nie 'n geldelike belang in aangeleentheid voor vergadering hê nie

121. 'n Lid van die Gemeenskapsraad mag nie by 'n vergadering van die Gemeenskapsraad of 'n komitee daarvan teenwoordig wees nie tydens die bespreking van of stemming oor enige aangeleentheid waarin hy, sy eggenote, sy vennoot, die vennoot van sy eggenote, sy werkgewer (behalwe die Staat) of die werkgewer (behalwe die Staat) van sy eggenote, regstreeks of onregstreeks 'n geldelike belang het.

Betaling van lede

122. Die toelae wat die Minister na oorleg met die Gemeenskapsraad en die Raad bepaal, word aan die lede van die Gemeenskapsraad betaal.

Algemene strafbepaling

123. Iemand wat skuldig bevind word aan 'n misdryf ingevolge hierdie Regulasies is strafbaar met 'n boete van hoogstens R200 of, by wanbetaling, gevangenisstraf vir 'n tydperk van hoogstens ses maande.

Sekere bepalings van toepassing op persone in artikel 3 (6) van die Wet bedoel

124. Die bepalings van regulasies 92 tot en met 96 en 98 tot en met 106 is *mutatis mutandis* van toepassing op 'n persoon in artikel 3 (6) van die Wet bedoel.

AANHANGSEL A
GEMEENSKAPSRAAD

Nominasie van 'n kandidaat vir verkiesing van 'n lid van die Gemeenskapsraad vir wyk.....

Ons, die ondergetekendes....., wat in wyk.....as kiesers geregistreer is, nomineer hierby (naam van kandidaat)..... vir verkiesing as lid van die..... Gemeenskapsraad in wyk.....

Naam (in drukskrif)	Identiteitsdokumentnommer	Adres	Handtekening
1.			
2.			
3.			
4.			
5.			
6.			
7.			
8.			
9.			
10.			

ACCEPTANCE OF NOMINATION BY CANDIDATE

I,.....,
Identity document No. ....., residing at .....,
hereby accept nomination for the election described above.

.....
Date ..... Candidate's signature

ANNEXURE B
COMMUNITY COUNCIL
APPOINTMENT OF AGENT

This is to certify that I have appointed.....
(Identity document No.....), of
(address) .....,
to be my agent to attend on my behalf at polling station
..... in ward..... /the
counting of votes on/during the period.....

Candidate.....
(Identity document No.....)

Address of candidate.....
.....
.....
Date.....

ANNEXURE C
COMMUNITY COUNCIL
DECLARATION OF SECRECY

I,.....,
do hereby solemnly promise and declare that I will not at the election of members of the .....Community Council to be held on .....do anything forbidden by regulation 52 of the..... which I have read and which I fully understand.

.....
*Electoral Officer
*Presiding Officer
*Polling Officer
*Counting Officer
*Candidate
*Agent
*Witness

Address.....
.....
.....
Date.....

The above declaration was made and subscribed before me at....., this.....day of.. .....19.....

.....
*Justice of the Peace
*Commissioner of Oaths
*Electoral Officer
*Presiding Officer

* Delete whichever is not applicable.

ANNEXURE D
FORM OF FRONT OF BALLOT PAPER

TEENBLAD
COUNTERFOIL

No.....

Gemeenskapsraadsverkiesing

Community Council Election

Wyk
Ward.....

Datum
Date.....

Volgnommer van kieser

Serial No. of voter

.....

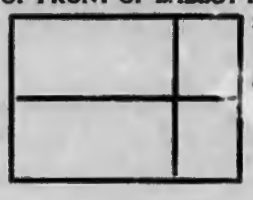

Stem slegs vir een kandidaat.

Stem deur 'n X te maak in die vierkant teenoor die naam van die kandidaat vir wie u wil stem.

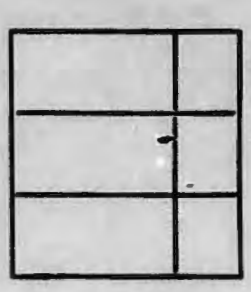

Vote for one candidate only.

Record your vote by placing an X in the square opposite the name of the candidate for whom you wish to vote.

AANVAARDING VAN NOMINASIE DEUR KANDIDAAT

Ek,.....,
Identiteitsdokumentnommer.....,
wat by .....woon, aanvaar hierby die nominasie vir die verkiesing hierbo beskryf.

.....
Datum..... Kandidaat se handtekening

AANHANGSEL B
GEMEENSKAPSRAAD
AANSTELLING VAN AGENT

Hierby word gesertifiseer dat ek.....
(Identiteitsdokumentnommer.....), van
(adres) .....,
aangestel het as agent om namens my teenwoordig te wees by stemburo ..... in wyk..... /die tel van stemme op/gedurende die tydperk.....

Kandidaat.....
(Identiteitsdokumentnommer.....)

Adres van kandidaat.....
.....
.....
Datum.....

AANHANGSEL C
GEMEENSKAPSRAAD
VERKLARING VAN GEHEIMHOUDING

Ek,.....,
beloof hierby pligtig en verklaar dat ek by die verkiesing van lede van die.....Gemeenskapsraad wat op..... gehou word, niks sal doen nie wat by regulasie 52 van die.....verbode is, wat ek gelees het en volkome begryp.

.....
*Verkiesingsbeampte
*Voorsittende beampte
*Stemopnemer
*Telbeampte
*Kandidaat
*Agent
*Getuie

Adres.....
.....
.....
Datum.....

Bostaande verklaring is voor my afgelê en onderteken te.....op hede die.....dag van.....19.....

.....
*Vrederegter
*Kommissaris van Ede
*Verkiesingsbeampte
*Voorsittende beampte

* Skrap wat nie van toepassing is nie.

AANHANGSEL D
VORM VAN VOORKANT VAN STEMBRIEFIE

TEENBLAD
COUNTERFOIL

No.....

Gemeenskapsraadverkiesing

Community Council Election

Wyk
Ward.....

Datum
Date.....

Volgnommer van kieser

Serial No. of voter

.....

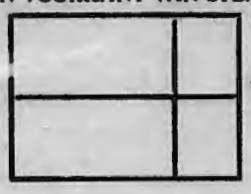

Stem slegs vir een kandidaat.

Stem deur 'n X te maak in die vierkant teenoor die naam van die kandidaat vir wie u wil stem.

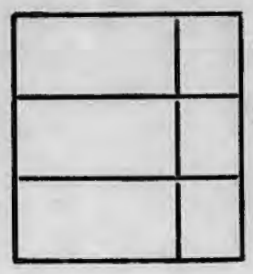

Vote for one candidate only.

Record your vote by placing an X in the square opposite the name of the candidate for whom you wish to vote.

IN LUMINE TUO VIDEBIMUS LUMEN
University of Fort Hare
Pioneer in Excellence

FORM OF BACK OF BALLOT PAPER

Amptelike merk

Official mark

Verkiesing van 'n lid van die Gemeenskapsraad
Election of a member of the..... Community Council
vir die wyk
for the ward of.....
Datum
Date.....

ANNEXURE E
BALLOT PAPER RETURN

Election of a member of the..... Community Council for ward..... held on.....
Polling station.....

Ballot papers received	Number	Ballot papers accounted for	Number
Ballot papers: Nos..... to..... inclusive		Ballot papers in ballot box.....	
		Unused ballot papers: Nos..... to..... inclusive	
		Spoiled ballot papers	
		Tendered ballot papers	
Total number received		Total number accounted for.....	

I hereby certify that the above is a correct return of all the ballot papers supplied to me.

Dated this.....day of..... 19.....

Place.....

Presiding Officer

ANNEXURE F
LABEL

Election of a member of the.....Community Council for ward.....
Contents.....
Date of poll.....

*Presiding Officer
*Electoral Officer

* Delete whichever is not applicable.

VORM VAN AGTERKANT VAN STEMBRIEFIE

Amptelike merk

Official mark

Verkiesing van 'n lid van die Gemeenskapsraad
Election of a member of the..... Community Council
vir die wyk
for the ward of.....
Datum
Date.....

AANHANGSEL E
STEMBRIEFOPGAWE

Verkiesing van 'n lid van die.....
Gemeenskapsraad vir wyk.....gehou op.....
Stemburo .....

Stembriewe ontvang	Getal	Verantwoorde stembriewe	Getal
Stembriewe: No.'s..... tot en met.....		Stembriewe in stembus.....	
		Ongebruikte stembriewe: No.'s..... tot en met.....	
		Bedorwe stembriewe	
		Aangebode stembriewe.....	
Totale getal ontvang		Totale getal verantwoord.....	

Ek verklaar hierby dat bostaande 'n juiste opgawe is van alle stembriewe aan my verskaf.

Gedateer op hede die.....dag van.....19.....

Plek.....

Voorsittende beampte

AANHANGSEL F
ETIKET

Verkiesing van 'n lid van die.....Gemeenskapsraad vir wyk.....
Inhoud.....
Datum van stemming.....

*Voorsittende beampte
*Verkiesingsbeampte

* Skrap wat nie van toepassing is nie.

No. R. 1771 29 August 1980

ESTABLISHMENT OF A COMMUNITY COUNCIL FOR THE URBAN RESIDENTIAL AREA OF EDENVILLE

I, George de Villiers Morrison, Deputy Minister of Co-operation, hereby establish, on behalf of the Minister of Co-operation and Development by virtue of the powers vested in him by section 2 (1) of the Community Council's Act, 1977 (Act 125 of 1977), a community council for the urban residential area defined in the Schedule hereto.

G. DE V. MORRISON, Deputy Minister of Co-operation.

(File A2/14/2/E4)

SCHEDULE

Urban residential area	*Defined in Government Notice*
Edenville.....	945 of 10 June 1938.

No. R. 1771 29 Augustus 1980

INSTELLING VAN 'N GEMEENSKAPSRAAD VIR DIE STEDELIKE WOONGEBIED VAN EDENVILLE

Ek, George de Villiers Morrison, Adjunk-minister van Samewerking, stel hierby namens die Minister van Samewerking en Ontwikkeling, kragtens die bevoegdheid hom verleen by artikel 2 (1) van die Wet op Gemeenskapsrade, 1977 (Wet 125 van 1977), 'n gemeenskapsraad in vir die stedelike woongebied omskryf in die Bylae hiervan.

G. DE V. MORRISON, Adjunk-minister van Samewerking.

(Lêer A2/14/2/E4)

BYLAE

Stedelike woongebied	*Omskryf by Goewermentskennisgewing*
Edenville.....	945 van 10 Junie 1938.

University of Pretoria
Together in Excellence

No. R. 1772 29 August 1980

REGULATIONS GOVERNING THE COMMUNITY COUNCIL OF EDENVILLE

I, George de Villiers Morrison, Deputy Minister of Co-operation, on behalf of and by direction of the Minister of Co-operation and Development, by virtue of the powers vested in him by section 11 (1) of the Community Council's Act, 1977 (Act 125 of 1977), hereby make the regulations contained in the accompanying Schedule.

G. DE V. MORRISON, Deputy Minister of Co-operation.

(File A2/14/2/E4)

SCHEDULE

CHAPTER 1

DEFINITIONS

1. In these Regulations, unless the context otherwise indicates—

"agents" means an agent appointed under regulation 23;

"Board" means the Oranje-Vaal Administration Board established by section 2 (1) of the Black Affairs Administration Act, 1971 (Act 45 of 1971), read with Government Notices R. 1445 of 1972 and R. 630 of 1979;

"Chief Director" means the Chief Director of the Board;

"Commissioner" means the person appointed Commissioner, Edenville, under section 2 (2) of the Black Administration Act, 1927 (Act 38 of 1927);

"committee" means any committee of the Community Council appointed under section 5 (1) (k) of the Act;

"Community Council" means the Edenville Community Council established under section 2 (1) of the Act and "Council" has a corresponding meaning;

"corrupt practice" means any of the offences of treating, undue influence, bribery and personation;

"electoral officer" means the electoral officer referred to in regulation 15 and includes an assistant electoral officer;

"identity document" means a reference book referred to in the Black (Abolition of Passes and Co-ordination of Documents) Act, 1952 (Act 67 of 1952), and a passport, permit, document of identity or other travel document referred to in the Admission of Persons to the Republic Regulation Act, 1972 (Act 59 of 1972);

"illegal practice" means any of the offences created by regulations 58, 59 and 60;

"member" means a member of the Community Council;

"registered occupier" means a person over the age of 18 years to whom a site, residential, hostel or lodger's permit or certificate of occupation has been issued in terms of the Regulations contained in the Schedule to Government Notice R. 1036 of 1968, any person over the age of 18 years to whom the township manager has issued a permit permitting him to occupy any approved dwelling on any church, school or institutional site and the person over the age of 18 years whose name appears on such permit or certificate as well as any child of such permit or certificate holder over the age of 18 years who lawfully resides continuously with such permit or certificate holder;

No. R. 1772 29 Augustus 1980

REGULASIES BETREFFENDE DIE GEMEENSKAPSRAAD VAN EDENVILLE

Ek, George de Villiers Morrison, Adjunk-minister van Samewerking, vaardig hierby namens en in opdrag van die Minister van Samewerking en Ontwikkeling, kragtens die bevoegdheid hom verleen by artikel 11 (1) van die Wet op Gemeenskapsrade, 1977 (Wet 125 van 1977), die regulasies uit wat in die bygaande Bylae vervat is.

G. DE V. MORRISON, Adjunk-minister van Samewerking.

(Lêer A2/14/2/E4)

BYLAE

HOOFSTUK 1

WOORDOMSKRYWING

1. In hierdie Regulasies, tensy uit die samehang anders blyk, beteken—

"agent" 'n agent aangestel kragtens regulasie 23;

"die Hoofwet" die Swartes (Stadsgebiede) Konsolidasiewet, 1945 (Wet 25 van 1945);

"die Wet" die Wet op Gemeenskapsrade, 1977 (Wet 125 van 1977);

"dorpsbestuurder" enige beampte aangewys kragtens artikel 22 van die Hoofwet en gelisensieer kragtens Goewermentskennisgewing 552 van 1958 om die stedelike woongebied waarvoor die Gemeenskapsraad ingestel is, te bestuur, asook die behoorlike aangestelde en gelisensieerde adjunk en assistent van sodanige beampte;

"Gemeenskapsraad" die Edenvillese Gemeenskapsraad ingestel kragtens artikel 2 (1) van die Wet;

"geregistreerde bewoner" 'n persoon bo die ouderdom van 18 jaar aan wie 'n perseel-, woon-, tehuis- of loseerderspermit of 'n sertifikaat van bewoning kragtens die Regulasies vervat in die Bylae van Goewermentskennisgewing R. 1036 van 1968 uitgereik is, 'n persoon bo die ouderdom van 18 jaar aan wie die dorpsbestuurder 'n permit uitgereik het om 'n goedgekeurde woning op 'n kerk-, skool- of inrigtingsterrein te bewoon en die persoon bo die ouderdom van 18 jaar wie se naam op sodanige permit of sertifikaat verskyn, asook enige kind bo die ouderdom van 18 jaar van sodanige permit- of sertifikaathouer wat wettiglik, onafgebroke by sodanige permit- of sertifikaathouer inwoon;

"Hoofdirekteur" die Hoofdirekteur van die Raad;

"identiteitsdokument" 'n bewysboek in die Swartes (Afskaffing van Passe en Koördinering van Dokumente) Wet, 1952 (Wet 67 van 1952), bedoel en 'n paspoort, permit, identifikasiebewys of ander reisdokument in die Wet op die Reëling van die Toelating van Persone tot die Republiek, 1972 (Wet 59 van 1972), bedoel;

"kieser" iemand wat ingevolge regulasie 3 bevoeg is om by 'n verkiesing van verkose lede van die Gemeenskapsraad te stem en wie se naam op 'n kieserslys in regulasie 4 bedoel, voorkom;

"komitee" 'n komitee van die Gemeenskapsraad aangestel kragtens artikel 5 (1) (k) van die Wet;

"Kommissaris" die persoon aangestel as Kommissaris, Edenville, kragtens artikel 2 (2) van die Swart Administrasie Wet, 1927 (Wet 38 van 1927);

"Secretary of the Community Council" means the person appointed or employed as such by the Community Council under section 5 (1) (i) of the Act;

"the Act" means the Community Council's Act, 1977 (Act 125 of 1977);

"the principal Act" means the Black (Urban Areas) Consolidation Act, 1945 (Act 25 of 1945);

"township manager" means any officer appointed in terms of section 22 of the principal Act and licensed under Government Notice 552 of 1958 to manage the urban residential area for which the Community Council has been established and includes the duly appointed and licensed deputy and assistant of such officer;

"voter" means any person who is qualified to vote at any election of elected members of the Community Council in terms of regulation 3 and whose name appears on any voters' list referred to in regulation 4.

CHAPTER 2
DELIMITATION

Delimitation of wards

2. (1) The Board shall divide the area for which the Community Council has been established into four wards.

(2) Such division shall be made within one month after the date of publication of these Regulations and thereafter at intervals of not less than five years and not more than 10 years commencing from the last delimitation of wards.

(3) Details of such division shall be made available for inspection at the office of the township manager.

CHAPTER 3
VOTERS AND VOTERS' LISTS

Qualification of voters

3. Only persons who are citizens of the Republic of South Africa or any territory which previously formed part of the Republic and who are registered occupiers within the area for which the Community Council has been established and whose names appear on the voters' list, shall be qualified to vote at any election of elected members of the Community Council.

Voters' lists

4. (1) Within two months of the delimitation of wards under regulation 2, the electoral officer shall prepare for each ward a list of persons who are entitled to vote.

(2) The lists prepared after any such delimitation of wards shall come into operation immediately after they have been so prepared by the electoral officer.

(3) Until the coming into operation of the voters' lists prepared after the delimitation of wards, the current voters' lists shall continue to be valid, but thereafter the lists prepared after such delimitation shall be the voters' lists for the respective wards.

(4) The voters' lists prepared for the various wards after any delimitation of wards shall be—

(a) supplemented by the insertion therein of the names of voters whose names do not appear therein and who have satisfied the electoral officer that they are qualified to have their names inserted therein; and

(b) further adjusted by the deletion of the name of any person who is dead or no longer qualifies for continuance of registration as a voter.

"korrupte bedrywigheid" enige van die misdrywe van trakteerdery, onbehoorlike beinvloeding, omkopery en uitgee vir 'n ander;

"lid" 'n lid van die Gemeenskapsraad;

"onwettige bedrywigheid" enige van die misdrywe geskep deur regulasies 58, 59 en 60;

"Raad" die Oranje-Vaal Administrasieraad ingestel by artikel 2 (1) van die Wet op Administrasie van Swart Sake, 1971 (Wet 45 van 1971), saamgelees met Goewermentskennisgewings R. 1445 van 1972 en R. 630 van 1979;

"Sekretaris van die Gemeenskapsraad" die persoon wat kragtens artikel 5 (1) (i) van die Wet as sodanig deur die Gemeenskapsraad aangestel of in diens van die Gemeenskapsraad is;

"verkiesingsbeampte" die verkiesingsbeampte in regulasie 15 bedoel en ook 'n assistent-verkiesingsbeampte.

HOOFSTUK 2
AFBAKENING

Afbakening van wyke

2. (1) Die Raad verdeel die gebied waarvoor die Gemeenskapsraad ingestel is in vier wyke.

(2) Sodanige verdeling word binne een maand na die datum van publikasie van hierdie Regulasies gedoen en daarna met tussenpose van minstens vyf jaar en hoogstens 10 jaar, gereken van die jongste afbakening van wyke.

(3) Besonderhede van sodanige verdeling word vir inspeksie by die kantoor van die dorpsbestuurder beskikbaar gestel.

HOOFSTUK 3
KIESERS EN KIESERSLYSTE

Kwalifikasie van kiesers

3. Alleenlik burgers van die Republiek van Suid-Afrika of 'n gebied wat voorheen deel van die Republiek uitgemaak het en wat geregistreerde bewoners is binne die gebied waarvoor die Gemeenskapsraad ingestel is en wie se name op die kieserslys verskyn, kwalifiseer om by 'n verkiesing van gekose lede van die Gemeenskapsraad te stem.

Kieserslyste

4. (1) Binne twee maande na die afbakening van wyke kragtens regulasie 2 moet die verkiesingsbeampte 'n lys van persone wat geregtig is om te stem, vir elke wyk opstel.

(2) Die lyste wat na sodanige afbakening van wyke opgestel is, tree in werking onmiddellik nadat dit aldus deur die verkiesingsbeampte opgestel is.

(3) Die lopende kieserslyste bly van krag totdat die kieserslyste wat na die afbakening van wyke opgestel is in werking tree, en daarna is die lyste wat na sodanige afbakening opgestel is, die kieserslyste vir die onderskeie wyke.

(4) Die kieserslyste wat na 'n afbakening van wyke vir die verskillende wyke opgestel is, word—

(a) aangevul deur die opname daarin van die name van kiesers wie se name nie daarin verskyn nie en wat die verkiesingsbeampte daarvan oortuig dat hul kwalifiseer vir die opname van hul name daarin; en

(b) verder aangepas deur die skrapping daarin van die name van kiesers wat oorlede is of nie langer bevoeg is om as 'n kieser geregistreer te wees nie.

LUMINE BIMUS TUO LUMEN
University of Pretoria
Together in Excellence

Voters' list in which voter's name is to be entered

5. No person's name shall be entered in a voters' list for any particular ward unless he actually resides in such ward on the date on which his name is so entered in the voters' list.

Particulars to be shown in voters' list

6. A voters' list shall show in respect of every person whose name is included therein—

(a) a serial number;

(b) his surname and immediately thereafter his first names;

(c) his residential address; and

(d) his identity document number;

in order of house numbers and, in the case of persons resident in hostels, all surnames shall be in alphabetical order.

Permanent change in the place of residence of voter

7. (1) Whenever there has been a permanent change in the place of residence of a voter, he shall forthwith notify the electoral officer of the change.

(2) On receipt of any such notification the electoral officer shall amend the voters' list or lists as circumstances may require.

List of insertions

8. On the first day of every month the electoral officer shall prepare in respect of each ward, a list of insertions, *mutatis mutandis* in the form prescribed in regulation 6 in respect of a voters' list, showing the names inserted in terms of regulations 4 (4) (a) and 7 (2) in the voters' list for the ward in question during the immediately preceding month.

Amendment of voters' list by electoral officer

9. (1) Subject to the provisions of subregulations (2) and (3), the electoral officer shall, if he is satisfied as to the relative facts, amend the voters' list for any ward by—

(a) correcting any mistake, supplying any omission or recording any change in the particulars of the registration of any person;

(b) after ascertaining by virtue of the provisions of regulation 7 that a person has ceased to be permanently resident in the ward in which he is registered as a voter, transferring his name to the list in respect of the ward to which he has moved, or, in the case of a person who has left the area for which the Community Council has been established, removing his name from the list;

(c) removing the name of any person who is dead or no longer qualifies for continuance of registration as a voter;

(d) removing any superfluous entry where the name of the same person appears more than once in the same voters' list or in voters' lists for more than one ward.

(2) Before removing the name of any person from the voters' list, or adding it thereto, the electoral officer shall, by such means as are practicable, satisfy himself that the name relates to the person concerned.

(3) The electoral officer shall cause a copy of a list containing the names of persons who no longer qualify for continuance of registration as voters and whose names were removed from the voters' list during any month, to be displayed on the notice board at the township manager's office for a period of at least 30 days commencing not later than the 20th day of the next ensuing month.

Kieserslys waarin kiesersnaam ingeskryf moet word

5. Geen persoon se naam word in 'n kieserslys vir 'n besondere wyk ingeskryf nie tensy hy inderdaad in sodanige wyk woon op die datum waarop sy naam aldus in die kieserslys ingeskryf word.

Besonderhede wat op 'n kieserslys aangegee moet word

6. Op 'n kieserslys moet ten aansien van iedere persoon wie se naam daarin opgeneem is, aangegee word—

(a) 'n volgnommer;

(b) sy van en onmiddellik daarna sy voorname;

(c) sy woonadres; en

(d) sy identiteitsdokumentnommer;

in volgorde van huisnommers, en in die geval van persone woonagtig in tehuise, moet alle vanne in alfabetiese volgorde wees.

Permanente verandering in verblyfplek van kieser

7. (1) Wanneer daar 'n permanente verandering plaasvind in die verblyfplek van 'n kieser, stel hy onverwyld die verkiesingsbeampte in kennis van die verandering.

(2) By ontvangs van so 'n kennisgewing, wysig die verkiesingsbeampte die kieserslys of -lyste, na gelang van die omstandighede.

Lys van opnames

8. Die verkiesingsbeampte stel op die eerste dag van elke maand ten opsigte van elke wyk 'n lys van opnames op, *mutatis mutandis* in die vorm in regulasie 6 ten opsigte van 'n kieserslys voorgeskryf, waarin die name wat gedurende die onmiddellik voorafgaande maand ingevolge regulasies 4 (4) (a) en 7 (2) in die kieserslys vir die betrokke wyk opgeneem is.

Wysiging van kieserslys deur verkiesingsbeampte

9. (1) Behoudens die bepalings van subregulasies (2) en (3), wysig die verkiesingsbeampte, indien hy oortuig is ten opsigte van die feite wat ter sake is, die kieserslys vir 'n wyk deur—

(a) 'n fout in die besonderhede van die registrasie van 'n persoon te verbeter, 'n weglating daarin aan te vul of 'n verandering daarin aan te teken;

(b) na vasstelling uit kragte van die bepalings van regulasie 7 dat 'n persoon opgehou het om permanent in die wyk waarin hy as 'n kieser geregistreer is te woon, sy naam oor te plaas na die lys ten opsigte van die wyk waarheen hy verhuis het of, in die geval van 'n persoon wat die gebied waarvoor die Gemeenskapsraad ingestel is verlaat het, sy naam van die lys te verwyder;

(c) die naam van 'n persoon wat oorlede is of onbevoeg is om as kieser geregistreer te bly, te verwyder;

(d) 'n oortollige inskrywing te verwyder, waar die naam van dieselfde persoon meer as een maal in dieselfde kieserslys of in kieserslyste vir meer as een wyk voorkom.

(2) Alvorens die naam van 'n persoon uit die kieserslys te verwyder of dit daarin by te voeg, vergewis die verkiesingsbeampte hom deur sodanige middele as wat uitvoerbaar is, daarvan dat die naam op die betrokke persoon betrekking het.

(3) Die verkiesingsbeampte laat 'n afskrif van 'n lys bevattende die name van persone wat onbevoeg is om as kiesers geregistreer te bly en wie se name gedurende enige maand van die kieserslys verwyder is, op die aanplakbord by die dorpsbestuurder se kantoor vertoon vir 'n tydperk van minstens 30 dae beginnende voor of op die 20ste dag van die daaropvolgende maand.

IN LUMINE TUO BIMUS LUMEN
University of Pretoria in Exclusive

When voters' lists to be printed

10. (1) The voters' lists as prepared and supplemented and further adjusted from time to time in accordance with the provisions of these Regulations, shall be printed, subject to the provisions of subregulation (2), not later than one month before an election referred to in regulation 19, and at such other times as the electoral officer considers necessary.

(2) The voters' lists printed for the purposes of an election referred to in subregulation (1) shall be the voters' lists for the wards in question as supplemented and further adjusted from time to time up to and including the last day of the month preceding the month in which the notice referred to in regulation 19 is issued.

(3) A voters' list printed for the purposes of an election referred to in subregulation (1), shall not be amended and shall prior to such election be made available for inspection for a period of at least 14 days at the office of the township manager within whose area of jurisdiction the ward is situated.

Voters' lists not invalidated by reason of errors

11. If through accident, inadvertence or oversight, anything required by law to be done in the preparation of any voters' list is erroneously done or omitted to be done, the voters' list shall not be invalidated thereby and the electoral officer may take or cause to be taken such steps as are necessary to rectify the error or omission.

CHAPTER 4

QUALIFICATIONS

12. Subject to the provisions of section 3 (5) of the Act, no person shall be qualified to be or remain a member of the Community Council if he—

(a) is not a registered occupier in the area for which the Community Council has been established;

(b) is not a voter;

(c) is in arrears for more than two months with any charges, fees or other dues payable by him to the Board or the Community Council on the day when nominations of candidates for the election of members of the Community Council close;

(d) has, within the period of three years immediately preceding the date of his nomination for election, been convicted of any offence in respect of which he has been sentenced to imprisonment without the option of a fine for a period of more than six months;

(e) is being detained as mentally disordered or defective under the Mental Disorders Act, 1916 (Act 38 of 1916), or the Mental Health Act, 1973 (Act 18 of 1973);

(f) is an employee of the Community Council;

(g) is prohibited in terms of section 2 (4) of the Riotous Assemblies Act, 1956 (Act 17 of 1956), from attending gatherings, and particulars of the notice addressed to him under the said section 2 (4) have been published in the *Government Gazette* in terms of section 2 (5) of the said Act;

(h) is prohibited in terms of section 5 (1) (e) or section 9 (1) of the Internal Security Act, 1950 (Act 44 of 1950), from attending gatherings;

(i) is a person whose name appears on a list compiled in terms of the provisions of section 4 (10) of the Internal Security Act, 1950 (Act 44 of 1950), and published in the *Government Gazette* in terms of section 8 (4) of the said Act.

Wanneer kieserslyste gedruk moet word

10. (1) Die kieserslyste, soos ooreenkomstig die bepalings van hierdie Regulasies opgestel en van tyd tot tyd aangevul en verder aangepas, word, behoudens die bepalings van subregulasie (2), gedruk uiterlik een maand voor 'n verkiesing in regulasie 19 bedoel, en op die ander tye wat die verkiesingsbeampte nodig ag.

(2) Die kieserslyste wat vir die doeleindes van 'n verkiesing in subregulasie (1) bedoel, gedruk word, is die kieserslyste vir die betrokke wyke soos van tyd tot tyd aangevul en verder aangepas tot en met die laaste dag van die maand wat die maand waarin die in regulasie 19 bedoelde kennisgewing uitgevaardig word, voorafgaan.

(3) 'n Kieserslys wat vir die doeleindes van 'n verkiesing in subregulasie (1) bedoel, gedruk is, word nie gewysig nie en word voor sodanige verkiesing vir inspeksie beskikbaar gestel vir 'n tydperk van minstens 14 dae by die kantoor van die dorpsbestuurder binne wie se regsgebied die wyk geleë is.

Kieserslyste nie as gevolg van foute ongeldig nie

11. Indien per ongeluk, per abuis of deur onopletendheid iets wat regtens by die opstel van 'n kieserslys gedoen moet word, verkeerd gedoen word of nie gedoen word nie, maak dit die kieserslys nie ongeldig nie, en kan die verkiesingsbeampte die stappe doen of laat doen wat nodig is om die fout te verbeter of om die versuim te herstel.

HOOFSTUK 4

KWALIFIKASIES

12. Behoudens die bepalings van artikel 3 (5) van die Wet, is geen persoon bevoeg om lid van die Gemeenskapsraad te wees of te bly nie indien hy—

(a) nie 'n geregistreerde bewoner binne die gebied waarvoor die Gemeenskapsraad ingestel is, is nie;

(b) nie 'n kieser is nie;

(c) op die dag waarop nominasies van kandidate vir die verkiesing van lede van die Gemeenskapsraad sluit, vir meer as twee maande agterstallig is met die betaling van vorderings, gelde of ander bedrae wat deur hom aan die Raad of die Gemeenskapsraad verskuldig is;

(d) binne die tydperk van drie jaar wat die datum van sy nominasie vir verkiesing onmiddellik voorafgaan, skuldig bevind is aan enige misdryf ten opsigte waarvan hy tot gevangenisstraf sonder die keuse van 'n boete vir 'n tydperk van meer as ses maande gevonnis is;

(e) kragtens die Wet op Geestesgebreken, 1916 (Wet 38 van 1916), of die Wet op Geestesgesondheid, 1973 (Wet 18 van 1973), as geestelik gekrenk of gebrekkig aangehou word;

(f) 'n werknemer van die Gemeenskapsraad is;

(g) kragtens artikel 2 (4) van die Wet op Oproerige Byeenkomste, 1956 (Wet 17 van 1956), verbied is om byeenkomste by te woon en besonderhede van die kennisgewing wat kragtens bedoelde artikel 2 (4) aan hom gerig is, kragtens artikel 2 (5) van bedoelde Wet in die *Staatskoerant* afgekondig is;

(h) kragtens artikel 5 (1) (e) of 9 (1) van die Wet op Binnelandse Veiligheid, 1950 (Wet 44 van 1950), verbied is om byeenkomste by te woon;

(i) iemand is wie se naam verskyn op 'n lys, saamgestel kragtens die bepalings van artikel 4 (10) van die Wet op Binnelandse Veiligheid, 1950 (Wet 44 van 1950), en in die *Staatskoerant* kragtens artikel 8 (4) van bedoelde Wet afgekondig is.

University of Fort Hare
Together in Excellence

CHAPTER 5

ELECTIONS

General elections

13. A general election of members of the Community Council shall take place not later than six months after the publication of these Regulations and thereafter in every third year during September.

Term of office of members

14. (1) A member elected at a general election or an election held to fill a casual vacancy shall assume office on the date of such election.

(2) A member designated by the Minister under section 3 (2) of the Act shall assume office on a date determined by the Minister.

(3) A member shall, subject to the provisions of regulations 61 and 62, remain in office up to and including the day immediately preceding the next succeeding general election or until the term for which he was designated by the Minister in terms of section 3 (2) of the Act, has expired.

Electoral officer

15. (1) The Commissioner shall appoint, after consultation with the Board, an electoral officer and as many assistant electoral officers as he may deem necessary.

(2) The electoral officer shall be responsible for the conduct of elections of members of the Community Council.

Presiding officer, polling officers, counting officers and witnesses

16. The electoral officer shall appoint in writing a presiding officer and as many polling officers and witnesses as may be necessary for effectually taking poll at every polling station and he shall appoint as many counting officers as may be necessary for the counting of votes after the close of the poll.

Polling stations

17. There shall be polling stations at such place or places as the electoral officer deems necessary.

Members to be elected

18. The number of members determined by the Minister under section 3 (1) of the Act shall be elected.

Fixing of nomination and polling dates

19. (1) The electoral officer shall, not later than three months after the date of publication of these Regulations, and thereafter not later than the first day of August of each year in which a general election is to be held, call, in a notice which shall be in both official languages and shall be published in at least one newspaper which generally circulates in the area for which the Community Council has been established and shall be displayed on the notice board at each township manager's office situated in such area, for the nomination of candidates for the election of members of the Community Council.

(2) The notice referred to in subregulation (1) shall specify—

(a) the place at which and the date and time before which nominations shall be received by the electoral officer, which date shall be not less than 14 days and not more than 21 days from the date of first publication of such notice; and

(b) the places at which and the date, other than a Sunday, on which polling shall take place.

HOOFSTUK 5

VERKIESINGS

Algemene verkiesings

13. 'n Algemene verkiesing van lede van die Gemeenskapsraad word gehou uiterlik ses maande nadat hierdie Regulasies bekendgemaak is en daarna driejaarliks gedurende September.

Ampstermyn van lede

14. (1) 'n Lid verkies in 'n algemene verkiesing of 'n verkiesing gehou om 'n toevallige vakature te vul, aanvaar sy amp op die datum van sodanige verkiesing.

(2) 'n Lid deur die Minister kragtens artikel 3 (2) van die Wet aangewys, aanvaar sy amp op die datum deur die Minister bepaal.

(3) 'n Lid bly, behoudens die bepalings van regulasies 61 en 62, in sy amp aan tot en met die dag wat die eersvolgende algemene verkiesing onmiddellik voorafgaan of totdat die termyn waarvoor hy ingevolge artikel 3 (2) van die Wet deur die Minister aangewys is, verstryk.

Verkiesingsbeampte

15. (1) Die Kommissaris na oorlegpleging met die Raad, stel 'n verkiesingsbeampte en soveel assistent verkiesingsbeamptes as wat hy nodig ag, aan.

(2) Die verkiesingsbeampte is verantwoordelik vir die hou van verkiesings van lede van die Gemeenskapsraad.

Voorsittende beampte, stemopnemers, telbeamptes en getuies

16. Die verkiesingsbeampte stel skriftelik 'n voorsittende beampte en soveel stemopnemers en getuies aan as wat nodig is om die stemming doeltreffend te laat plaasvind by iedere stemburo en stel soveel telbeamptes aan as wat nodig is vir die tel van die stemme na die sluiting van die stemming.

Stemburo's

17. Daar moet stemburo's wees by sodanige plek of plekke as wat die verkiesingsbeampte nodig ag.

Lede wat verkies moet word

18. Die aantal lede deur die Minister kragtens artikel 3 (1) van die Wet bepaal, word verkies.

Bepaling van nominasie- en stemdatums

19. (1) Die verkiesingsbeampte moet binne drie maande na die bekendmaking van hierdie Regulasies en daarna uiters op die eerste dag van Augustus van elke jaar waarin 'n algemene verkiesing gehou staan te word, in 'n kennisgewing, in albei amptelike tale, wat afgekondig word in ten minste een nuusblad wat gewoonlik in die gebied waarvoor die Gemeenskapsraad ingestel is, versprei word en wat op die aanplakbord by elke dorpsbestuurder se kantoor in sodanige gebied geleë vertoon word, om nominasies vra van kandidate vir verkiesing tot lede van die Gemeenskapsraad.

(2) Die kennisgewing in subregulasie (1) bedoel, vermeld—

(a) die plek waar en die datum en tyd tot en met wanneer nominasies deur die verkiesingsbeampte ontvang sal word, welke datum minstens 14 dae en hoogstens 21 dae na die datum van eerste afkondiging van sodanige kennisgewing moet wees; en

(b) die plekke waar en die datum, uitgesonderd 'n Sondag, waarop stemming sal plaasvind.

University of Fort Hare

Hours of poll

20. The poll shall commence at 07h00 and close at 21h00 on the polling day, but the presiding officer shall permit every voter who is at 21h00 inside the room in which the ballot box is, to record his vote before the closing of the poll.

Nomination of candidates

21. (1) Nominations of candidates for election as members of the Community Council shall be submitted in writing to the electoral officer in the form contained in Annexure A hereto, which form shall be supplied by the township manager, and shall be supported by the signatures of not less than 10 persons who are registered as voters in the ward for which the nomination is made.

(2) The electoral officer shall as soon as practicable, and not later than 14 days after the date referred to in subregulation (1), affix on the notice board at the office of the township manager a notice containing a list of the candidates duly nominated in terms of these Regulations and shall also declare those candidates who have been returned unopposed to be elected members for their respective wards.

Deposit by or on behalf of persons nominated

22. (1) There shall be deposited by or on behalf of each person nominated as a candidate for election as a member of the Community Council the sum of R15 with the electoral officer on or before the date and time referred to in regulation 19 (2) (a).

(2) If poll takes place and the total number of votes received thereat by any unsuccessful candidate is less than one-fifth of the number of votes received by the successful candidate the sum deposited by or on behalf of such unsuccessful candidate shall be forfeited and shall be paid into the funds of the Community Council.

(3) Save as is in this regulation expressly provided, the sum deposited shall be returned to the depositor.

Candidates and agents

23. (1) Any duly nominated candidate at an election of members of the Community Council may, in the form contained in Annexure B hereto, appoint one or more agents to assist him and shall advise the electoral officer in writing of the name(s) and address(es) of such agent or agents.

(2) The candidates and only one agent per candidate shall be allowed at any particular time to be present inside any polling station or any place where votes are counted.

(3) Any person appointed an agent in terms of subregulation (1) shall produce his letter of appointment to the electoral officer, presiding officer or polling officer, as the case may be, if required to do so.

Provision of equipment

24. (1) For all elections the electoral officer shall arrange for voting compartments, ballot boxes, ballot papers, instruments for marking ballot papers with the official mark and other requirements to be provided and shall do such other acts and make such arrangements to facilitate the taking of the poll as he may deem necessary for effectually conducting the election.

Ure van stemming

20. Stemming begin om 07h00 en sluit om 21h00 op die dag van stemming, maar die voorsittende beampte laat elke kieser wat om 21h00 binne die kamer waarin die stembus is, sy stem uitbring voor die sluiting van die stemming.

Nominasie van kandidate

21. (1) Die nominasie van kandidate vir verkiesing tot lede van die Gemeenskapsraad moet skriftelik by die verkiesingsbeampte ingedien word in die vorm in Aanhangsel A hiervan vervat en wat deur die dorpsbestuurder verskaf word en dit moet gestaaf word deur die handtekeninge van 10 persone wat as kiesers geregistreer is in die wyk ten opsigte waarvan sodanige nominasie geskied.

(2) Die verkiesingsbeampte moet so gou doenlik, en uiters 14 dae na die datum in subregulasie (1) bedoel, 'n kennisgewing met die lys van kandidate wat behoorlik ingevolge hierdie Regulasies genomineer is, op die aanplakbord by die kantoor van die dorpsbestuurder opplak en moet ook dié kandidate wat onbestrede verkies is, tot verkose lede vir hul onderskeie wyke verklaar.

Deposito deur of namens genomineerde persone

22. (1) Daar word op of voor die datum en tyd in regulasie 19 (2) (a) bedoel, deur of ten behoewe van elke persoon wat genomineer is as kandidaat vir verkiesing tot lid van die Gemeenskapsraad die bedrag van R15 by die verkiesingsbeampte gestort.

(2) Indien 'n stemming plaasvind en die totale getal stemme wat daarby op enige verslane kandidaat uitgebring is, minder is as 'n vyfde van die getal stemme van die suksesvolle kandidaat, word die bedrag wat deur of ten behoewe van sodanige verslane kandidaat gestort is, verbeur en in die fondse van die Gemeenskapsraad gestort.

(3) Behoudens die uitdruklike bepalings van hierdie regulasie, word die gestorte bedrag aan die deposant terugbetaal.

Kandidate en agente

23. (1) Enige behoorlik genomineerde kandidaat by 'n verkiesing van lede van die Gemeenskapsraad kan, in die vorm vervat in Aanhangsel B hiervan, een of meer agente aanstel om hom behulpsaam te wees, en hy moet die verkiesingsbeampte skriftelik in kennis stel van die naam (name) en adres(se) van sodanige agent(e).

(2) Die kandidate en slegs een agent per kandidaat word toegelaat om op enige bepaalde tydstip binne enige stemburo of by enige plek waar stemme getel word, teenwoordig te wees.

(3) 'n Persoon wat kragtens subregulasie (1) as agent aangestel is, moet sy aanstellingsbrief toon aan die verkiesingsbeampte, voorsittende beampte of stemopnemer na gelang van die geval, indien dit van hom verlang word.

Verskaffing van uitrusting

24. (1) Die verkiesingsbeampte reël by alle verkiesings dat stemhokkies, stembusse, stembriewe, toestelle om die stembriewe met die amptelike merk te merk en ander benodigdhede verskaf word en doen sodanige ander stappe en tref sodanige reëlings ter vergemakliking van die stemming as wat hy nodig ag ten einde die verkiesing op doeltreffende wyse te kan laat geskied.

(2) The equipment and requirements in connection with any election shall be supplied by and all expenditure in this connection shall be for the account of the Community Council: Provided that the equipment and requirements in connection with the first election shall be supplied by and all expenditure in connection with such election shall be for the account of the Board.

Polling station at which voter shall vote

25. A voter voting in the area of jurisdiction of the Community Council may only vote at a polling station determined by the returning officer by virtue of regulation 17.

Declaration of secrecy

26. (1) The electoral officer and every presiding officer, polling officer, candidate, agent, witness or any other person or official (except a policeman) entitled to attend at a polling station or at the counting of votes shall, before the opening of the poll, and every counting officer shall, before the commencement of the counting of votes, make, in duplicate, in the form contained in Annexure C hereto, a declaration of secrecy under oath before a justice of the peace or a commissioner of oaths, or before the electoral officer or a presiding officer who are hereby authorised to administer such oath.

(2) The original declaration of secrecy shall be handed to the electoral officer by the person who made it, before the opening of the poll or before the commencement of the counting of votes, as the case may be, and such person shall at all times during the polling or the counting of votes have the duplicate of such declaration of secrecy in his possession and shall on demand produce it to the electoral officer or the presiding officer for inspection.

Procedure at ballot

27. The presiding officer, in the presence of such candidates and agents as may be present, shall—

(a) before the commencement of the poll, seal each ballot box, leaving open an opening through which ballot papers may be inserted into the ballot box;

(b) at the closing of the poll, seal the opening referred to in paragraph (a).

Powers of the presiding officer at a polling station

28. (1) The presiding officer shall keep order at a polling station, shall regulate the number of voters to be admitted at any time and shall exclude all other persons except the electoral officer, the candidates or their agents, and policemen and other officials on duty.

(2) Save as is excepted in subregulation (1), the presiding officer may require any person (other than a person recording his vote) to leave the polling station and any person who fails to leave the polling station when so required may be arrested without a warrant on the order of the presiding officer and shall be guilty of an offence.

(3) The powers conferred by this regulation shall not be exercised so as to prevent any voter who is otherwise entitled to vote from having an opportunity of voting at the polling station.

(2) Die Gemeenskapsraad verskaf die uitrusting en benodigdhede in verband met 'n verkiesing en alle uitgawes in verband met sodanige verkiesing is vir sy rekening: Met dien verstande dat die Raad die uitrusting en benodigdhede in verband met die eerste verkiesing verskaf en dat alle uitgawe in dié verband vir sy rekening is.

Stemburo waar kieser moet stem

25. 'n Kieser wat binne die regsgebied van die Gemeenskapsraad stem, kan alleenlik stem by 'n stemburo deur die kiesbeampte ingevolge regulasie 17 bepaal.

Verklaring van geheimhouding

26. (1) Die verkiesingsbeampte en elke voorsittende beampte, stemopnemer, kandidaat, agent, getuie of enige ander persoon of beampte (uitgesonderd 'n polisiebeampte) wat geregtig is om in 'n stemburo of by die tel van stemme teenwoordig te wees, moet voor die aanvang van die stemming, en elke telbeampte moet voor die aanvang van die tel van stemme, in die vorm vervat in Aanhangsel C hiervan, in duplikaat, 'n beëdigde verklaring van geheimhouding aflê voor 'n vrederegter of 'n kommissaris van ede, of voor die verkiesingsbeampte of 'n voorsittende beampte wat hierby gemagtig word om sodanige eed af te neem.

(2) Die oorspronklike verklaring van geheimhouding word aan die verkiesingsbeampte, voor die aanvang van die stemming of die begin van die tel van stemme, na gelang van die geval, deur die persoon wat dit afgelê het, oorhandig en sodanige persoon moet die duplikaat van sodanige verklaring van geheimhouding te alle tye gedurende die stemming of tel van stemme in sy besit hê en moet dit op aandrang aan die verkiesingsbeampte of die voorsittende beampte vir inspeksie toon.

Prosedure by stemming

27. Die voorsittende beampte, in teenwoordigheid van sodanige kandidate en agente as wat teenwoordig is, verseël—

(a) voor die aanvang van die stemming, elke stembus maar laat 'n opening oop waardeur stembriewe in die stembus ingesit kan word;

(b) by die sluiting van die stemming, die opening in paragraaf (a) bedoel.

Bevoegdhede van voorsittende beampte by 'n stemburo

28. (1) Die voorsittende beampte hou orde by 'n stemburo, reël hoeveel kiesers tegelyk binnegelaat word en hou alle ander persone, uitgesonderd die verkiesingsbeampte, die kandidate of hulle agente en polisiebeamptes en ander beamptes op diens, buite.

(2) Behoudens die uitsonderings wat by subregulasie (1) gemaak word, kan die voorsittende beampte enige persoon (uitgesonderd 'n persoon wat sy stem uitbring) aansê om die stemburo te verlaat en enige persoon wat versuim om dit te doen wanneer dit van hom vereis word, begaan 'n misdryf en kan op bevel van die voorsittende beampte sonder lasbrief in hegtenis geneem word.

(3) Die bevoegdhede by hierdie regulasie verleen, word nie so uitgeoefen dat dit 'n kieser wat andersins geregtig is om te stem, verhinder om sy stem by die stemburo uit te bring nie.

Ballot papers

29. Every ballot paper to be used for voters who wish to vote shall be in both official languages and in the form set out in Annexure D hereto, and there shall be printed or written on every ballot paper in alphabetical order the names of all the duly nominate candidates at the election and their addresses and occupations.

No voter to vote more than once

30. A voter shall, whether or not his name appears on more than one voters' list or more than once on the same voters' list, be entitled to cast at an election one vote only and no voter shall be entitled to vote unless he has produced to the presiding officer or a polling officer his identity document.

Identification of voters

31. (1) Save as provided in regulation 36, no enquiry shall be made at an election as to the identity of any person or his right to vote, except that the presiding officer may himself, and if required by any candidate or an agent of any candidate shall, after any person has established his identity in the manner contemplated in regulation 30, and before he is allowed to vote, put to him either or both of the following questions, but no other, namely:

(a) Are you the person whose name appears as A.B. on the list of voters in this ward?

(b) Have you already voted at this election in this or any other ward?

(2) Any person who fails to establish his identity in the manner contemplated in regulation 30 or who does not answer the first question distinctly and absolutely in the affirmative and the second question distinctly and absolutely in the negative, shall not be permitted to vote.

(3) A person who makes a false answer to either of those questions shall be guilty of an offence.

(4) The presiding officer may make enquiry of any other presiding officer at any polling station for the purpose of verifying an answer to either of the two questions referred to in subregulation (1), and may further order the arrest without warrant of any person who is suspected by him on reasonable grounds of making a false answer to either of such questions or of committing the offence of personation as defined in regulation 57.

(5) Every person empowered by law to make arrests shall carry out such an order of the presiding officer.

Manner of voting

32. (1) The voting at all elections held in terms of the provisions of these Regulations shall be by secret ballot.

(2) Every person who wishes to vote shall apply to the presiding officer or a polling officer for a ballot paper and such officer shall, if he is satisfied that such person is entitled to vote in the ward concerned and after determining that no ballot paper has already been issued at that polling station to that person at such election, he shall—

(a) call out the serial number and name of the voter as it appears on the voter's list;

(b) enter the serial number in the appropriate space on the counterfoil of the ballot paper that is to be issued to the voter;

Stembriewe

29. Elke stembrief wat gebruik word deur kiesers wat wil stem, moet in albei amptelike tale wees en in die vorm vervat in Aanhangsel D hiervan en op elke stembrief moet die name staan van al die behoorlik genomineerde kandidate by die verkiesing in alfabetiese orde afgedruk of ingeskryf en hul adresse en beroepe.

Geen kieser mag meer as een maal stem nie

30. 'n Kieser is, ongeag of sy naam op meer as een kieserslys of meer as een maal op dieselfde kieserslys voorkom, geregtig om by 'n verkiesing slegs een stem uit te bring, en geen kieser is geregtig om te stem nie tensy hy sy identiteitsdokument aan die voorsittende beampte of 'n stemopnemer oorlê.

Identifikasie van kiesers

31. (1) Behoudens soos by regulasie 36 bepaal, word by 'n verkiesing geen navraag gedoen omtrent enige persoon se identiteit of sy reg om te stem nie, behalwe dat die voorsittende beampte nadat iemand sy identiteit op die wyse in regulasie 30 beoog, bewys het, en voordat hy toegelaat word om te stem, hom een van of albei die volgende vrae, en geen ander nie, uit die beweging kan, en op versoek van 'n kandidaat of 'n agent van 'n kandidaat moet, stel, naamlik:

(a) Is u die persoon wie se naam as A.B. op die kieserslys van hierdie wyk voorkom?

(b) Het u reeds in hierdie verkiesing of in 'n ander wyk gestem?

(2) Iemand wat versuim om sy identiteit op die wyse in regulasie 30 beoog, te bewys, of wat nie die eerste vraag duidelik en sonder voorbehoud bevestigend en die tweede duidelik en sonder voorbehoud ontkennend beantwoord nie, word nie toegelaat om te stem nie.

(3) Iemand wat op enigeen van daardie vrae 'n valse antwoord gee, is aan 'n misdryf skuldig.

(4) Die voorsittende beampte kan by 'n ander voorsittende beampte by enige stemburo navraag doen ten einde die waarheid van 'n antwoord op enigeen van die vrae in subregulasie (1) bedoel te toets en kan verder beveel dat enigiemand wat hy op redelike gronde verdink daarvan dat hy op enigeen van bedoelde vrae 'n valse antwoord gegee het, of hom skuldig maak aan die misdryf om hom vir 'n ander uit te gee, soos in regulasie 57 omskryf, sonder lasbrief in hegtenis geneem word.

(5) Iedereen wat regtens bevoeg is tot inhegtenisneming, voer so 'n bevel van die voorsittende beampte uit.

Wyse waarop gestem word

32. (1) Die stemming by alle verkiesings wat kragtens die bepalings van hierdie Regulasies gehou word, geskied by geheime stemming.

(2) Elke persoon wat wil stem, doen aansoek om 'n stembrief by die voorsittende beampte of 'n stemopnemer en sodanige beampte of stemopnemer, indien hy oortuig is dat sodanige persoon geregtig is om in die betrokke wyk te stem en nadat hy vasgestel het dat geen stembrief reeds aan daardie persoon by daardie stemburo by sodanige verkiesing uitgereik is nie, moet hy—

(a) die volgnommer en naam van die kieser soos dit op die kieserslys voorkom, uitroep;

(b) die volgnommer in die toepaslike ruimte op die teenblad van die stembrief wat aan die kieser uitgereik gaan word, inskryf;

(c) tear out the ballot paper and stamp the official mark on the back thereof in the space provided;

(d) fold the ballot paper so that the front thereof is on the inside and the official mark is on the outside and hand it to the applicant; and

(e) on the voters' list, draw a line through the serial number, identity document number and name of the voter as proof that a ballot paper has been issued.

(3) When the voter has received such ballot paper he shall take it to the compartment provided for that purpose and signify for whom he desires to vote by secretly placing a cross opposite the name of the candidate for whom he wishes to vote. He shall then fold the ballot paper so that the official mark can be seen and having held up the ballot paper so that the presiding officer or polling officer can recognise the official mark, shall drop the ballot paper in the ballot box placed in front of the presiding officer or polling officer.

(4) If the ballot paper that is about to be dropped into the ballot box has inadvertently not been marked with the official mark, the presiding officer or polling officer may cause such ballot paper to be so marked.

(5) If the presiding officer or polling officer has any reason to doubt that a ballot paper in the possession of a voter is the ballot paper issued to him, he may, for the purpose of comparing the numbers printed on the ballot paper and the counterfoil, request the voter to show him the number and official mark appearing on the back of the ballot paper and the voter shall do so.

(6) The voter shall vote without undue delay and shall leave the polling station as soon as he has put his ballot paper into the ballot box.

Voters who are unable to vote in the manner prescribed

33. (1) Any voter who is unable to vote in the prescribed manner may request the presiding officer or polling officer to complete his ballot paper on his behalf.

(2) Such presiding officer or polling officer, as the case may be, shall thereupon, with due regard to the maintenance of secrecy and in the presence of one witness and a person of the voter's own choice who shall accompany him, read to such voter the names of the candidates for the particular ward and affix a cross in the space provided on the ballot paper opposite the name of the candidate selected by word of mouth by such voter and shall thereafter fold the ballot paper and put it into the ballot box.

(3) In the performance of his functions under this regulation such polling officer shall disregard any document or thing exhibited or produced by or in the possession of the voter which indicates or suggests or purports to indicate or suggest the name of any candidate for whom such voter is or is not to vote.

Spoilt ballot papers

34. If a voter inadvertently spoils a ballot paper he may return it to the presiding officer or polling officer who, if he is satisfied of such inadvertence, shall give him another ballot paper and retain the spoilt ballot paper which he shall immediately cancel and endorse with the words "returned under regulation 34" and the fact of such cancellation shall be noted upon the counterfoil.

(c) die stembrief uitskeur en dit op die keersy in die ruimte voorsien met die amptelike merk, merk;

(d) die stembrief vou sodat die voorkant daarvan aan die binnekant en die amptelike merk aan die buitekant is en dit aan die kieser oorhandig; en

(e) op die kieserslys 'n streep trek deur die volgnommer, identiteitsdokumentnommer en naam van die kieser, as bewys dat 'n stembrief uitgereik is.

(3) Wanneer die kieser sodanige stembrief ontvang, neem hy dit na die stemhokkie wat vir dié doel verskaf is en dui aan vir wie hy stem deur in die geheim 'n kruisie teenoor die naam van die kandidaat vir wie hy wil stem, aan te bring. Hy vou dan die stembrief sodat die amptelike merk sigbaar is en nadat hy die stembrief so opgehou het dat die voorsittende beampte of stemopnemer die amptelike merk kan herken, laat hy die stembrief val in die stembus wat voor die voorsittende beampte of stemopnemer staan.

(4) Indien die stembrief wat in die stembus ingesit staan te word, onopsetlik nie met die amptelike merk gemerk is nie, kan die voorsittende beampte of stemopnemer sodanige stembrief aldus laat merk.

(5) Indien die voorsittende beampte of stemopnemer om enige rede twyfel of 'n stembrief in besit van 'n kieser die stembrief is wat aan hom uitgereik is, kan hy, met die doel om die nommers gedruk op die stembrief en die teenblad te vergelyk, die kieser versoek om die nommer en amptelike merk op die keersy van die stembrief aan hom te toon, en die kieser moet dit doen.

(6) Die kieser moet sonder onnodige versuim sy stem uitbring en die stemburo verlaat sodra hy sy stembrief in die stembus geplaas het.

Kiesers wat nie in staat is om op die voorgeskrewe wyse te stem nie

33. (1) Enige kieser wat nie in staat is om sy stem op die voorgeskrewe wyse uit te bring nie, kan die verkiesingsbeampte of stemopnemer versoek om sy stembrief namens hom in te vul.

(2) Sodanige verkiesingsbeampte of stemopnemer, na gelang van die geval, moet daarop met behoorlike inagneming van die handhawing van geheimhouding en in teenwoordigheid van een getuie en 'n persoon van die kieser se eie keuse wat hom moet vergesel, aan sodanige kieser die name van die kandidate vir die bepaalde wyk voorlees en 'n kruis in die ruimte op die stembrief aanbring teenoor die naam van die kandidaat wat mondeling deur sodanige kieser gekies is, en moet daarna die stembrief vou en dit in die stembus plaas.

(3) By die verrigting van sy werksaamhede ingevolge hierdie regulasie moet sodanige stemopnemer enige dokument of ding verontagsaam wat deur die kieser vertoon of getoon word of in die kieser se besit is en wat die naam van enige kandidaat vir wie sodanige kieser moet stem of nie moet stem nie, aandui of suggereer of veronderstel is om dit aan te dui of te suggereer.

Bedorwe stembriewe

34. Indien 'n kieser onopsetlik 'n stembrief bederf, kan hy dit aan die voorsittende beampte of stemopnemer teruggee, en as laasgenoemde daarvan oortuig is dat dit onopsetlik gebeur het, gee hy hom 'n ander stembrief en behou hy die bedorwe stembrief wat hy onmiddellik kanselleer en teken hy die woorde "teruggegee kragtens regulasie 34" daarop aan, en die feit dat dit aldus gekanselleer is, word op die teenblad aangeteken.

Stellenbosch University Together in Excellence

Tendered ballot papers

35. If a person representing himself to be a particular voter applies for a ballot paper after another person has voted in his name, the applicant shall, upon duly answering the questions permitted by regulation 31 to be asked of voters at the time of polling, be entitled to mark a ballot paper in the same manner as any other voter, but the ballot paper shall not be put into the ballot box but shall be given to the presiding officer, endorsed by him with the name of the voter and his serial number on the voters' list and set aside in a separate packet.

Circumstances under which ballot paper may be refused by presiding officer

36. (1) If any candidate or an agent of any candidate or any voter makes before the presiding officer a declaration on oath stating that a person enrolled on the voters' list is dead or is so incapacitated by sickness, absence or otherwise, that it is impossible for such person to be present at the polling station to record his vote at the election then being held, the presiding officer shall refuse to hand a ballot paper to any person who applies for the same in the name of the person who is the subject of the declaration unless the person so applying proves his identity to the satisfaction of the presiding officer or makes a declaration on oath before the presiding officer that he is the person whose name appears on the voters' list for the ward and that the statements made in the first-mentioned declaration (which shall be read over to him) are false.

(2) The presiding officer is hereby authorised and required to administer any such oath as is required by subregulation (1).

(3) Any person who makes any false statement in any declaration referred to in subregulation (1), knowing the statement to be false, shall be guilty of an offence.

(4) More than one person may be referred to in any declaration on oath made under subregulation (1), provided the reason why each of the persons referred to is unable to attend at a polling station can be clearly connected with the person to whom the declaration relates.

Sealing of ballot boxes, etc.

37. (1) Every presiding officer shall, immediately after the close of the poll, in the presence of such candidates or their agents (if any) as may be in attendance, make up into separate packets, sealed with his own seal and with the seals of those candidates or agents (if any) who desire to affix their seals—

(a) each ballot box entrusted to him, unopened;

(b) the unused and spoiled ballot papers;

(c) the counterfoils of all used ballot papers; and

(d) tendered ballot papers;

and shall forthwith deliver or cause to be delivered the packets to the electoral officer.

(2) The packets shall be accompanied by a return made by the presiding officer, in the form contained in Annexure E hereto, showing the number of ballot papers entrusted to him and accounting for them under the heads of "Ballot papers in the ballot box", "Unused ballot papers", "Spoiled ballot papers" and "Tendered ballot papers".

Aangebode stembriewe

35. Indien iemand wat voorgee dat hy 'n bepaalde kieser is, om 'n stembrief aansoek doen nadat 'n ander persoon in sy naam gestem het, is die aansoeker, nadat hy behoorlik geantwoord het op die vrae wat volgens regulasie 31 tydens die stemming aan kiesers gestel kan word, geregtig om 'n stembrief te merk op dieselfde wyse as enige ander kieser, maar die stembrief word nie in die stembus geplaas nie, maar word aan die voorsittende beampte gegee en deur hom met die naam van die kieser en sy volgnommer geëndosseer en eenkant gesit in 'n afsonderlike pakket.

Omstandighede waaronder voorsittende beampte 'n stembrief kan weier

36. (1) Indien 'n kandidaat of 'n agent van 'n kandidaat of 'n kieser voor die voorsittende beampte 'n beëdigde verklaring aflê dat 'n persoon wat in die kieserslys ingeskryf is, oorlede is of dat bedoelde persoon weens siekte, afwesigheid of om 'n ander rede onmoontlik by die stemburo teenwoordig kan wees om by die verkiesing wat dan gehou word, sy stem uit te bring, weier die voorsittende beampte om 'n stembrief uit te reik aan enigiemand wat daarom aansoek doen in naam van die persoon op wie die verklaring betrekking het, tensy die persoon wat aldus aansoek doen sy identiteit tot tevredenheid van die voorsittende beampte bewys of voor die voorsittende beampte 'n beëdigde verklaring aflê dat hy die persoon is wie se naam op die kieserslys vir die wyk voorkom en dat die bewerings in eersbedoelde verklaring (wat aan hom voorgelees moet word) vals is.

(2) Aan die voorsittende beampte word hierby die bevoegdheid verleen en die verpligting opgelê om 'n in subregulasie (1) bedoelde eed af te neem.

(3) Iemand wat in 'n in subregulasie (1) bedoelde verklaring 'n valse verklaring doen, wetende dat dit vals is, is aan 'n misdryf skuldig.

(4) In 'n beëdigde verklaring ingevolge subregulasie (1) afgelê, kan na meer as een persoon verwys word, mits die rede waarom elkeen van die persone na wie verwys word, nie by die stemburo kan wees nie, duidelik met die persoon op wie die verklaring betrekking het, verbind kan word.

Verseëling van stembusse, ens.

37. (1) Elke stemopnemer maak onmiddellik na die sluiting van die stemming, in teenwoordigheid van sodanige kandidate of hulle agente (as daar is) as wat aanwesig is, afsonderlike pakkette, verseël met sy eie seël en met die seëls van dié kandidate of hulle agente (as daar is) wat hulle seëls ook daarop wil afdruk, van—

(a) elke stembus wat aan hom toevertrou is, onoopgemaak;

(b) die ongebruikte en die bedorwe stembriewe;

(c) die teenblaaie van alle gebruikte stembriewe; en

(d) aangebode stembriewe;

en lewer die pakkette onverwyld aan die verkiesingsbeampte af of laat hulle aan hom aflewer.

(2) Die pakkette gaan vergesel van 'n opgawe in die vorm vervat in Aanhangsel E hiervan deur die voorsittende beampte verstrek waarin hy die getal stembriewe aan hom toevertrou noem en waarin hy van hulle rekenskap gee onder die hoofde "Stembriewe in die stembus", "Ongebruikte stembriewe", "Bedorwe stembriewe" en "Aangebode stembriewe".

(3) A label in the form contained in Annexure F hereto shall be affixed to each of the packets mentioned in subregulation (1) and to the return mentioned in subregulation (2).

Action to be taken by the electoral officer upon receipt of ballot papers

38. The electoral officer shall upon receipt of voters' ballot papers retain such ballot papers unopened in safe custody until the counting of votes.

Verification of ballot paper return

39. (1) The electoral officer shall, upon receipt of all the packets and ballot boxes from every presiding officer, and not before, examine whether the seals are in order and afford such candidates or their agents as may be in attendance an opportunity to do the same and after that open the sealed packets containing the ballot paper return and shall open each ballot box and verify the number of ballot papers in the ballot box according to the ballot paper return given by each presiding officer by comparing it with the number of ballot papers in each such ballot box.

(2) When the electoral officer has completed the verification of the ballot papers in the ballot boxes for each polling station, and whether or not the number of ballot papers in the ballot boxes is found to correspond with the number appearing on the return, he shall in the presence of such candidates or their agents as may be present mix together the ballot papers contained in all the ballot boxes for a particular ward so that it is impossible to determine from which ballot box any particular ballot paper was taken.

(3) The electoral officer shall, after scrutinising the official mark on the ballot papers, proceed to count or cause to be counted the votes and while counting the votes shall cause the ballot papers to be kept with their faces upwards.

Manner of counting votes

40. The ballot papers shall, for the purposes of counting, be fastened together in packets of 50 (to each of which a distinctive number shall be assigned) and thereafter the number of votes for each candidate shall be recorded and checked.

Ballot papers to be rejected

41. (1) The electoral officer shall reject and not count any ballot paper—

(a) which does not bear the official mark;

(b) on which votes are cast for more than one candidate;

(c) which is unmarked or invalid owing to uncertainty;

(d) which bears any writing or mark by which a voter can be identified otherwise than in these Regulations prescribed.

(2) Subject to the provisions of subregulation (1), the electoral officer shall not reject any ballot paper on which a voter has clearly indicated, in a manner other than by means of a cross, for which candidate he has voted.

(3) The electoral officer shall endorse the word "rejected" on a ballot paper which he may reject as invalid.

(3) Elkeen van die pakkette in subregulasie (1) genoem en die opgawe in subregulasie (2) genoem, word voorsien van 'n etiket in die vorm vervat in Aanhangsel F hiervan.

Optrede deur verkiesingsbeampte by ontvangs van stembriewe

38. Elke verkiesingsbeampte moet by ontvangs van kiesers se stembriewe sodanige stembriewe onoopgemaak in veilige bewaring hou totdat die stemme getel word.

Verifiëring van stembriefopgawe

39. (1) By ontvangs deur die verkiesingsbeampte van al die pakkette en stembusse van iedere voorsittende beampte, en nie eerder nie, ondersoek hy of die seëls in orde is en gee hy sodanige kandidate of hulle agente as wat aanwesig is 'n geleentheid om dieselfde te doen, en daarna maak hy die verseëlde pakkette oop wat die opgawe van stembriewe bevat, en maak hy elke stembus oop en verifieer hy die getal stembriewe in die stembus ooreenkomstig die stembriefopgawe wat deur elke voorsittende beampte ingelewer is deur dit met die getal stembriewe in elke sodanige stembus te vergelyk.

(2) Wanneer die verkiesingsbeampte die verifiëring van die stembriewe in die stembusse vir elke stemburo uitgevoer het, maak hy, afgesien daarvan of die getal stembriewe in die stembusse klop met die getal wat op die opgawe voorkom al dan nie, in teenwoordigheid van sodanige kandidate of hulle agente as wat aanwesig is, die stembriewe uit al die stembusse vir 'n besondere wyk op so 'n wyse deurmekaar dat dit onmoontlik is om te bepaal uit watter stembus 'n bepaalde stembrief geneem is.

(3) Nadat hy die amptelike merk op die stembriewe nagegaan het, gaan die verkiesingsbeampte oor tot die tel van die stemme en terwyl hy die stemme tel of laat tel, laat hy die stembriewe met hulle voorkant na bo hou.

Wyse waarop stemme getel moet word

40. Vir die doel van die tel van stemme word die stembriewe in pakkette van 50 vasgebind (aan elkeen waarvan 'n onderskeidende nommer toegeken word) en daarna word die getal stemme ten opsigte van elke kandidaat opgeskryf en nagegaan.

Stembriewe wat verwerp moet word

41. (1) Die verkiesingsbeampte verwerp en tel nie 'n stembrief nie—

(a) wat nie die amptelike merk daarop het nie;

(b) waarop stemme op meer as een kandidaat uitgebring is;

(c) wat ongemerk of weens onsekerheid ongeldig is;

(d) wat enige skrif of merk daarop het waardeur 'n kieser op 'n ander wyse as dié in hierdie Regulasies voorgeskryf, geïdentifiseer kan word.

(2) Behoudens die bepalings van subregulasie (1), verwerp die verkiesingsbeampte nie 'n stembrief waarop 'n kieser op 'n ander wyse as by wyse van 'n kruis duidelik aangedui het vir watter kandidaat hy stem nie.

(3) Die verkiesingsbeampte endosseer die woord "verwerp" op 'n stembrief wat hy as ongeldig verwerp.

Objection against acceptance or rejection of a ballot paper

42. (1) If a candidate or an agent objects to the acceptance of any ballot paper, the electoral officer shall endorse the words "objection raised against acceptance" on such ballot paper.

(2) If a candidate or an agent objects to the rejection of any ballot paper, the electoral officer shall endorse the words "objection raised against rejection" on such ballot paper.

Determination of successful candidate in event of equal number of votes

43. In the event of the number of votes being found to be equal for the candidates who obtained the greater or the greatest number of votes, the electoral officer shall by lot determine the successful candidate.

Result of election

44. The electoral officer shall, as soon as possible after determining which candidate has obtained the greater or the greatest number of votes in each ward, in public declare such candidates duly elected and shall make known the number of votes polled by each candidate.

Publication of names of elected members

45. (1) As soon as possible after the names of the candidates duly elected as members of the Community Council are known the electoral officer shall cause to be displayed on the notice board of each township manager's office situated in the area for which the Community Council has been established a list reflecting the full name of every member so elected together with the date on which he was duly elected, the name of the ward which such member represents and the total number of votes cast in favour of such member.

(2) A notice displayed in terms of subregulation (1) shall also reflect the names of the unsuccessful candidates in respect of each ward and the total number of votes cast in favour of each such candidate, as well as the number of rejected ballot papers in respect of each ward.

Disposal of electoral matter by electoral officer after the counting of votes has been completed

46. (1) The electoral officer shall after the completion of the counting of votes make up into separate packets the following:

(a) All unused, tendered and spoiled ballot papers used at each polling station;

(b) all counted ballot papers in respect of each ward;

(c) all rejected ballot papers in respect of each ward; and

(d) all ballot paper returns duly endorsed with his findings on the verification of such returns.

(2) The electoral officer shall—

(a) affix a label in the form contained in Annexure F hereto to each of the packets mentioned in subregulation (1);

(b) seal each such packet with his own seal and with the seals of such candidates and agents (if any) as may desire to affix their seals; and

(c) retain such packets for a period of six months and thereafter destroy them.

Beswaar teen aanname of verwerping van stembrief

42. (1) Indien 'n kandidaat of 'n agent beswaar maak teen die aanname van 'n stembrief, endosseer die verkiesingsbeampte die woorde "beswaar geopper teen aanname" op sodanige stembrief.

(2) Indien 'n kandidaat of 'n agent beswaar maak teen die verwerping van 'n stembrief, endosseer die verkiesingsbeampte die woorde "beswaar geopper teen verwerping" op sodanige stembrief.

Bepaling van suksesvolle kandidaat in geval van staking van stemme

43. Ingeval daar bevind word dat ewe veel stemme uitgebring is op die kandidate wat die grootste getal stemme verkry het, bepaal die verkiesingsbeampte die suksesvolle kandidaat deur loting.

Uitslag van verkiesing

44. Die verkiesingsbeampte verklaar in die openbaar, so gou moontlik nadat hy bepaal het watter kandidaat die grootste getal stemme in elke wyk verkry het, sodanige kandidate behoorlik verkose en maak die getal stemme bekend wat op elke kandidaat uitgebring is.

Bekendmaking van name van verkose lede

45. (1) Sodra die name van die kandidate wat behoorlik as lede van die Gemeenskapsraad verkies is, bekend is, laat die verkiesingsbeampte 'n lys bevattende die volle naam van elke kandidaat aldus verkies tesame met die datum waarop hy behoorlik verkies is, die naam van die wyk wat sodanige lid verteenwoordig en die totale getal stemme wat ten gunste van sodanige lid uitgebring is, op die aanplakbord van elke dorpsbestuurder se kantoor wat in sodanige gebied geleë is, vertoon.

(2) 'n Kennisgewing ingevolge subregulasie (1) vertoon, dui ook die name van die onsuksesvolle kandidate ten opsigte van elke wyk en die totale getal stemme aan wat ten opsigte van elke sodanige kandidaat uitgebring is, asook die getal bedorwe stembriewe ten opsigte van elke wyk.

Beskikking oor verkiesingstukke deur verkiesingsbeampte na afloop van tel van stemme

46. (1) Na afloop van die tel van die stemme maak die verkiesingsbeampte die volgende in afsonderlike pakkette op:

(a) Alle ongebruikte, aangebode en bedorwe stembriewe wat by elke stemburo gebruik is;

(b) alle getelde stembriewe met betrekking tot elke wyk;

(c) alle verworpe stembriewe met betrekking tot elke wyk; en

(d) alle stembriefopgawes behoorlik geëndosseer met sy bevindings betreffende die verifiëring van sodanige opgawes.

(2) Die verkiesingsbeampte—

(a) voorsien elke pakket genoem in subregulasie (1) van 'n etiket in die vorm vervat in Aanhangsel F hiervan;

(b) verseël elke sodanige pakket met sy eie seël en met die seëls van sodanige kandidate en agente (as daar is) as wat hulle seëls ook daarop wil afdruk; en

(c) bewaar sodanige pakkette vir 'n tydperk van ses maande en vernietig hulle daarna.

Immaterial mistakes not to affect validity of election

47. No election shall be invalid by reason of any mistake or non-compliance with the provisions of these Regulations if the election was conducted in accordance with the principles laid down herein and such mistake or non-compliance did not affect the result.

Evidence of election being held

48. Upon any charge of a corrupt or illegal practice or any other offence under these Regulations alleged to have been committed at or in connection with an election, the certificate of the electoral officer that the election mentioned therein was being or had been held shall be sufficient evidence of the fact that such election was being or had been held.

Sundays and public holidays

49. Whenever under these Regulations anything is required to be commenced, concluded or done on a particular date, and that date happens to fall upon a Sunday or a day declared by or under any law to be a public holiday, such thing shall be commenced, concluded or done on the date next succeeding such Sunday or public holiday or if the last-mentioned date is also a Sunday or public holiday, then on the date next succeeding such Sunday or public holiday.

Interrupting or disturbing proceedings at elections

50. Any person who wilfully interrupts, obstructs or disturbs any proceedings in connection with the conduct of elections in terms of the provisions of these Regulations or who on polling day uses any form of loudspeaker or forms or organises any procession of or demonstration by persons other than for official purposes, shall be guilty of an offence.

Fraud in connection with ballot papers, etc.

51. (1) Any person who—

(a) forges or counterfeits or fraudulently destroys any ballot paper or the official mark on any ballot paper;

(b) without due authority supplies a ballot paper to any person;

(c) fraudulently puts into any ballot box any paper other than the ballot paper which he is authorised by law to put in;

(d) fraudulently takes out of the polling station any ballot paper; or

(e) without due authority destroys, takes, opens or otherwise interferes with any ballot box or packet of ballot papers then in use for the purpose of the election;

shall be guilty of an offence.

(2) In any indictment, summons or charge for an offence in relation to ballot boxes, ballot papers and official marking instruments at an election, the property in such boxes, papers and instruments as well as the property in the counterfoils, may be stated to be in the electoral officer.

(3) If the electoral officer is so indicted or charged such property may be stated to be in the Community Council.

Infringement of secrecy

52. (1) Every officer, candidate or his agent in attendance at a polling station or at the counting of votes, shall maintain, and aid in maintaining, the

Onbelangrike foute raak nie geldigheid van verkiesing nie

47. Geen verkiesing is weens 'n fout of nie-nakoming van die bepalings van hierdie Regulasies ongeldig nie indien die verkiesing gehou is ooreenkomstig die beginsels hierin voorgeskryf en sodanige fout of nie-nakoming nie die uitslag geraak het nie.

Bewys dat verkiesing gehou is

48. By 'n aanklag van 'n korrupte of onwettige bedrywigheid of van 'n ander misdryf ingevolge hierdie Regulasies, wat volgens bewering by of in verband met 'n verkiesing begaan is, is die sertifikaat van die verkiesingsbeampte dat die verkiesing daarin gemeld aan die gang was of gehou is, voldoende bewys van die feit dat sodanige verkiesing aan die gang was of gehou is.

Sondae en openbare feesdae

49. Wanneer enigiets op 'n bepaalde datum ingevolge hierdie Regulasies begin, voltooi of gedoen moet word, en daardie datum op 'n Sondag val of op 'n dag wat by of kragtens 'n wet ot 'n openbare feesdag verklaar is, moet dit begin, voltooi of gedoen word op die eersvolgende datum na sodanige Sondag of openbare feesdag, of us laasgenoemde datum ook op 'n Sondag of openbare feesdag val, dan op die eersvolgende datum na sodanige Sondag of openbare feesdag.

Onderbreking of steuring van verrigtings by verkiesings

50. 'n Persoon wat opsetlik verrigtings in verband met die hou van verkiesings ooreenkomstig die bepalings van hierdie Regulasies onderbreek, belemmer of versteur, of op stemdag enige vorm van luidspreker gebruik of enige optog van, of betoging deur, persone vorm of reël, uitgesonderd vir amptelike doeleindes, begaan 'n misdryf.

Bedrog met stembriewe, ens.

51. (1) 'n Persoon wat—

(a) 'n stembrief of die amptelike merk op 'n stembrief vervals, namaak of met opset om te bedrieg vernietig;

(b) sonder behoorlike magtiging 'n ander persoon van 'n stembrief voorsien;

(c) met opset om te bedrieg, enige ander stuk papier in 'n stembus plaas as die stembrief wat hy regtens daarin mag plaas;

(d) met opset om te bedrieg, 'n stembrief uit die stemburo wegneem; of

(e) sonder behoorlike m gtiging 'n stembus of pakket stembriewe wat dan vir die doel van die verkiesing in gebruik is, vernietig, neem, oopmaak of hom op 'n ander wyse daarmee bemoei;

begaan 'n misdryf.

(2) In 'n akte van beskuldiging, dagvaarding of aanklag weens 'n misdryf met betrekking tot stembusse, stembriewe en amptelike merkinstrumente by 'n verkiesing kan verklaar word dat die eiendomsreg op die busse, stembriewe en instrumente, asook op die teenblaaie, by die verkiesingsbeampte by die verkiesing berus.

(3) Word die verkiesingsbeampte aldus beskuldig of aangekla, kan verklaar word dat die eiendomsreg by die Gemeenskapsraad berus.

Skending van geheimhouding

52. (1) Iedere beampte, kandidaat of sy agent wat by 'n stemburo of by die tel van stemme aanwesig is, moet die geheimhouding van die stemming in daardie

secrecy of the voting in that station and shall not communicate, except for some purpose authorised by law, to any person any information likely to defeat the secrecy of the voting.

(2) No person, except as in these Regulations provided, shall interfere with or attempt to interfere with a voter when such voter is marking his ballot paper, or otherwise attempt to obtain information as to the candidate for whom any voter is about to vote or has voted, or communicate at any time to any person any information obtained as to the candidate for whom any voter is about to vote or has voted at a taking of poll under these Regulations.

(3) No person shall directly or indirectly induce any voter to display his ballot paper, after he has marked the same, in such a manner as to make known to any person the name of the candidate for whom the voter has so marked his ballot paper.

(4) No person shall place upon any ballot paper any mark or writing whereby a person who casts his vote on that ballot paper may be identified.

(5) Every person in attendance at the counting of votes shall maintain, and aid in maintaining, the secrecy of the voting, and shall not attempt to ascertain or communicate any information obtained at such counting as to the candidate for whom any vote is cast in any particular ballot paper.

(6) A person who has, in carrying out his duties under these Regulations, obtained knowledge as to the candidate for whom any other person has voted shall not, except in answer to a question lawfully put to him in the course of proceedings in a competent court, disclose such knowledge.

(7) Any person who contravenes or fails to comply with any provision of this regulation shall be guilty of an offence.

Failure by electoral officer or other officer to perform his duties

53. If the electoral officer or any other officer or person wilfully fails to perform any of the duties which he is required to perform under the provisions of these Regulations, he shall be guilty of an offence.

Treating

54. Any person who corruptly by himself or by any other person either before, during or after an election, directly or indirectly gives or provides, or pays wholly or in part the expense of giving or providing, any food, drink, entertainment, lodging or provisions to or for any person for the purpose of corruptly influencing that person or any other person to cast or refrain from casting his vote at an election, or on account of such person or any other person having voted or refrained from voting, or being about to vote or refrain from voting at such election, shall be guilty of the offence of treating.

Undue influence

55. (1) Any person who directly or indirectly by himself or by any other person makes use or threatens to make use of any force, violence or restraint or inflicts or threatens to inflict any temporal or spiritual injury, damage, harm or loss upon or against, or does or threatens to do anything to the disadvantage of any person in order to induce or compel that person to

buro handhaaf en help om dit te handhaaf en mag aan geen persoon, uitgesonderd vir die een of ander regtens geoorloofde doel, enige inligting meedeel wat waarskynlik die geheimhouding van die stemming sal verydel nie.

(2) Behoudens die bepalings van hierdie Regulasies, mag geen persoon hom met 'n kieser bemoei, of probeer om hom met 'n kieser te bemoei wanneer sodanige kieser sy stembrief merk nie, of andersins by 'n stemming kragtens hierdie Regulasies probeer om te wete te kom vir watter kandidaat 'n kieser op die punt staan om te stem of gestem het nie of te eniger tyd aan enige persoon meedeel vir watter kandidaat, volgens inligting wat verkry is, 'n kieser op die punt staan om te stem of gestem het nie.

(3) Geen persoon mag direk of indirek enige kieser beweeg om sy stembrief, nadat hy dit gemerk het, op so 'n wyse te vertoon dat enige persoon die naam van die kandidaat vir wie hy sy stembrief aldus gemerk het, te wete kom nie.

(4) Geen persoon mag op 'n stembrief enige merk of skrif aanbring waardeur 'n persoon wat met daardie stembrief stem, geïdentifiseer kan word nie.

(5) Iedere persoon wat by die tel van die stemme aanwesig is, moet die geheimhouding van die stemming handhaaf en help om dit te handhaaf, en mag nie probeer vasstel of aan 'n ander persoon meedeel vir watter kandidaat, volgens inligting wat by sodanige telling verkry is, op 'n bepaalde stembrief 'n stem uitgebring is nie.

(6) 'n Persoon wat by die vervulling van sy pligte kragtens hierdie Regulasies te wete gekom het op watter kandidaat enige ander persoon sy stem uitgebring het, mag sodanige kennis nie bekendmaak nie, uitgesonderd in antwoord op 'n vraag wat wettiglik aan hom gestel is in die loop van verrigtings in 'n bevoegde hof.

(7) 'n Persoon wat enige van die bepalings van hierdie regulasie oortree of versuim om daaraan te voldoen, begaan 'n misdryf.

Versuim deur verkiesingsbeampte of ander beampte om sy pligte te vervul

53. Indien die verkiesingsbeampte of enige ander beampte of persoon opsetlik versuim om enige van die pligte te vervul wat kragtens die bepalings van hierdie Regulasies hom opgelê is, begaan hy 'n misdryf.

Trakteerdery

54. 'n Persoon wat korruptelik, hetsy voor, gedurende of na 'n verkiesing, self of deur 'n ander persoon direk of indirek aan of vir enige persoon voedsel, drank, vermaak, inwoning of lewensmiddele gee of verskaf of die koste om dit te gee of te verskaf, of 'n deel daarvan, betaal, met die doel om daardie persoon of 'n ander persoon korruptelik te beïnvloed om sy stem by die verkiesing uit te bring al dan nie, of omdat daardie persoon of 'n ander persoon sy stem by die verkiesing uitgebring het of gaan uitbring al dan nie, begaan die misdryf van trakteerdery.

Onbehoorlike beïnvloeding

55. (1) 'n Persoon wat, self of deur 'n ander persoon, direk of indirek teen enige persoon geweld of dwang gebruik of dreig om te gebruik, of aan enige persoon enige wêreldlike of geestelike leed, skade, kwaad of verlies berokken of dreig om dit te berokken of iets ten nadele van enige persoon doen of dreig om dit te doen, ten einde daardie persoon te beweeg of te dwing

University of Fort Hare

vote or refrain from voting, or on account of that person having voted or refrained from voting at any election, shall be guilty of the offence of undue influence.

(2) Any person who, by abduction, duress or fraudulent device or contrivance, impedes or prevents the free exercise of the franchise by any voter, or thereby compels, induces or prevails upon any voter either to cast or to refrain from casting his vote at any election, shall be guilty of the offence of undue influence.

Bribery

56. (1) Any person shall be guilty of the offence of bribery if he, directly or indirectly, by himself or by any other person—

(a) gives, lends or procures, or agrees to give, lend or procure, or offers, promises, or promises to procure or to endeavour to procure any money or any other thing, to or for any voter, or to or for any person on behalf of any voter, or to or for any other person, in order to induce any voter to vote or refrain from voting, or corruptly does any such act as aforesaid on account of such voter having voted or refrained from voting at any election;

(b) gives, lends or agrees to give or lend, or offers, or promises to procure or to endeavour to procure any money or any other thing to or for any voter, or to or for any person on behalf of any voter, or to or for any other person, for acting or joining in any procession or demonstration before, during or after any election;

(c) makes any such gift, loan, offer, promise, procurement or agreement to or for any person in order to induce such person to procure or endeavour to procure, the return of any candidate at any election or the vote of any voter at an election;

(d) upon or in consequence of any such gift, loan, offer, promise, procurement or agreement, procures, or engages, promises or endeavours to procure, the return of any candidate at any election or the vote of any voter at any election;

(e) advances or pays, or causes to be advanced or paid, any money, to, or for the use of, any other person with the intent that such money, or any part thereof, shall be expended in bribery at any election, or knowingly pays, or causes to be paid, any money to any person in discharge or repayment of any money wholly or in part expended in bribery at any election;

(f) before or during any election, receives or contracts for any money or loan, for himself or for any other person, for voting or agreeing to vote, or for refraining or agreeing to refrain from voting, at any election;

(g) after any election receives any money on account of any person having voted or refrained from voting or having induced any other person to vote or refrain from voting at any election; or

(h) conveys or transfers or is concerned with the conveyance or transfer of any property, or pays or is concerned with the payment of any money, to any person for the purpose of enabling him to vote, thereby to influence his vote at any future election, or pays or is concerned with the payment of any money on behalf of any voter for the purpose of inducing him to vote or refrain from voting.

om sy stem by 'n verkiesing uit te bring al dan nie, of omdat hy sy stem by 'n verkiesing uitgebring het al dan nie, begaan die misdryf van onbehoorlike beïnvloeding.

(2) 'n Persoon wat deur ontvoering, dwang of enige bedrieglike middel die vrye uitoefening van die stemreg deur 'n kieser belemmer of belet of 'n kieser daardeur dwing, beweeg of oorhaal om sy stem by 'n verkiesing uit te bring al dan nie, begaan die misdryf van onbehoorlike beïnvloeding.

Omkopery

56. (1) 'n Persoon begaan die misdryf van omkopery indien hy, self of deur 'n ander, direk of indirek—

(a) aan of vir 'n kieser, of aan of vir 'n persoon ten behoewe van 'n kieser, of aan of vir enige ander persoon, enige geld of enigiets anders gee, leen of verkry of ooreenkom om dit te gee, te leen of te verkry of dit aanbied, beloof of beloof om dit te verkry of om te probeer om te verkry, ten einde 'n kieser te beweeg om sy stem by 'n verkiesing uit te bring al dan nie, of korruptelik een van voormelde handelinge verrig omdat die kieser sy stem by 'n verkiesing uitgebring het al dan nie;

(b) aan of vir 'n kieser, of aan of vir 'n persoon ten behoewe van 'n kieser, of aan of vir enige ander persoon, enige geld of enigiets anders gee of leen, of ooreenkom om dit te gee of te leen, of dit aanbied, of beloof om dit te verkry of om te probeer om dit te verkry, vir optrede in of deelname aan enige optog of betoging voor, gedurende of na 'n verkiesing;

(c) aan of vir 'n persoon sodanige skenking, lening, aanbod, belofte, verkryging of ooreenkoms gee, verstrek, deen of aangaan ten einde sodanige persoon te beweeg om die verkiesing van 'n kandidaat by 'n verkiesing of die stem van 'n kieser by 'n verkiesing te verkry of om te probeer om dit te verkry;

(d) teen of ten gevolge van sodanige skenking, lening, aanbod, belofte, verkryging of ooreenkoms, die verkiesing van 'n kandidaat by 'n verkiesing of die stem van 'n kieser by 'n verkiesing verkry of onderneem, beloof of probeer om dit te verkry;

(e) aan of vir die gebruik van 'n ander persoon enige geld voorskiet of betaal of laat voorskiet of betaal, met die bedoeling dat daardie geld of enige deel daarvan by 'n verkiesing aan omkopery bestee moet word, of willens en wetens aan 'n persoon enige geld betaal of laat betaal ter vereffening of terugbetaling van geld wat geheel of ten dele by 'n verkiesing aan omkopery bestee is;

(f) voor of gedurende enige verkiesing, vir homself of 'n ander persoon, enige geld of lening ontvang of beding, omdat hy by 'n verkiesing gestem het of ooreengekom het om te stem, of omdat hy hom by 'n verkiesing van stemming onthou het of ooreengekom het om hom van stemming te onthou;

(g) na 'n verkiesing geld ontvang omdat 'n persoon sy stem uitgebring het al dan nie of 'n ander persoon beweeg het om sy stem by enige verkiesing uit te bring al dan nie; of

(h) eiendom oordra of transporteer of betrokke is by die oordrag of transport van eiendom, of enige geld betaal of betrokke is by die betaal van enige geld aan 'n persoon ten einde hom in staat te stel om te stem en daardeur sy stem by 'n toekomstige verkiesing te beïnvloed, of enige geld betaal of betrokke is by die betaling van enige geld ten behoewe van 'n kieser ten einde hom te beweeg om sy stem uit te bring al dan nie.

(2) Nothing in this regulation contained shall be construed as applying to any money paid or agreed to be paid for or on account of any electoral expenditure bona fide and lawfully incurred.

Personation

57. Any person who—

(a) at any election applies for a ballot paper in the name of some other person, whether living, dead or fictitious; or

(b) having voted once at any election, applies again at any polling station at the same election for a ballot paper;

shall be guilty of the offence of personation.

Corrupt procurement of candidature or withdrawal thereof

58. Any person who—

(a) corruptly induces or procures any other person to become a candidate or to withdraw as a candidate at any election in consideration of any payment or promise of any nature;

(b) becomes a candidate or withdraws as a candidate at any election in pursuance of such inducement or procurement; or

(c) before or during an election publishes a false statement of the withdrawal of a candidate at an election for the purpose of promoting or procuring the election of another candidate, knowing that statement to be false;

shall be guilty of an offence.

Bills, placards, etc., to bear publisher's name

59. (1) Every bill, placard, poster, pamphlet, circular or other printed matter having reference to an election shall clearly bear the name and address of the printer and publisher thereof.

(2) No person shall print, publish or post up or cause to be printed, published or posted up, any such printed matter which fails to bear clearly the name and address of the printer and publisher.

(3) The proprietor and publisher of every newspaper shall cause the word "advertisement" to be printed as a headline to each article or paragraph in his newspaper containing electoral matter, the insertion of which is or is to be paid for or for which any reward or compensation or promise of reward or compensation is or is to be made.

(4) The words "electoral matter" used in subregulation (3) include all matters which on the face of it are intended or calculated to affect the result of an election, and any report of the speech of a candidate if the insertion of the report is or is to be paid for.

(5) Every report, letter, article, bill, placard, poster, pamphlet, circular, cartoon or other printed matter (hereinafter in this subregulation called a newspaper article) which, on the face of it, is intended or calculated to effect the result of an election, and is inserted in any newspaper or otherwise produced and is published on or after the date of commencement of such election of members to the Community Council, shall bear at the foot thereof the full name and address of the person by whom such newspaper article was written or produced: Provided that—

(a) any newspaper article which is inserted in any newspaper as aforesaid and which has been altered materially by the editor of such newspaper, may also be signed by such editor;

(2) Geen bepaling van hierdie regulasie mag uitgelê word nie as sou dit van toepassing wees op geld wat vir of weens bona fide- en wettig aangegane verkiesingskoste betaal is of volgens ooreenkoms betaal moet word.

Uitgee vir 'n ander

57. 'n Persoon wat—

(a) by enige verkiesing in die naam van 'n ander persoon, hetsy lewend of afgestorwe, of van 'n denkbeeldige persoon, om 'n stembrief aansoek doen; of

(b) nadat hy een maal by 'n verkiesing gestem het, weer by 'n stemburo by dieselfde verkiesing om 'n stembriefaansoek doen;

begaan die misdryf van hom vir 'n ander uit te gee.

Korrupte verkryging van kandidatuur of terugtrekking daarvan

58. 'n Persoon wat—

(a) 'n ander persoon korruptelik beweeg of oorhaal om, as teenprestasie vir 'n betaling of belofte van watter aard ook al, 'n kandidaat by enige verkiesing te word of as sodanig terug te trek;

(b) as gevolg daarvan dat by aldus beweeg of oorgehaal is, 'n kandidaat by enige verkiesing word of as sodanig terugtrek; of

(c) voor of gedurende 'n verkiesing, met die doel om die verkiesing van 'n ander kandidaat te bevorder of te bewerkstellig, 'n valse verklaring dat 'n kandidaat by 'n verkiesing teruggetrek het, publiseer wetende dat die verklaring vals is;

begaan 'n misdryf.

Biljette, plakkate, ens., moet naam van uitgewer dra

59. (1) Alle biljette, plakkate, aanplakbiljette, pamflette, omsendbriewe of ander drukwerk wat op 'n verkiesing betrekking het, moet die naam en adres van die drukker en uitgewer daarvan duidelik dra.

(2) Geen persoon mag sodanige drukwerk wat nie die naam en adres van die drukker en uitgewer dra nie, druk, uitgee of aanplak of laat druk, uitgee of aanplak nie.

(3) Die eienaar en uitgewer van iedere nuusblad moet die woord "advertensie" as 'n opskrif laat druk by elke artikel of paragraaf in sy nuusblad wat verkiesingstof bevat, vir die opneming waarvan betaal is of gaan word of waarvoor 'n beloning of vergoeding of 'n belofte van beloning of vergoeding gegee is of gaan word.

(4) Die woord "verkiesingstof" in subregulasie (3) gebesig, omvat alles wat, na die skyn geoordeel, bedoel of daarop bereken is om die uitslag van 'n verkiesing te beïnvloed, asook enige verslag van 'n toespraak van 'n kandidaat, indien vir die opneming van die verslag betaal word of gaan word.

(5) Alle verslae, briewe, artikels, biljette, plakkate, aanplakbiljette, pamflette, omsendbriewe, spotprente of ander drukwerk (hieronder in hierdie subregulasie nuusbladartikels genoem) wat, na die skyn geoordeel, bedoel of daarop bereken is om die uitslag van 'n verkiesing te beïnvloed, en in 'n nuusblad opgeneem of op 'n ander wyse geproduseer word en op of na die datum van die begin van die verkiesing van lede van die Gemeenskapsraad gepubliseer word, moet onderaan die volle naam en adres dra van die persoon deur wie die nuusbladartikel geskryf of geproduseer is: Met dien verstande dat—

(a) enige sodanige nuusbladartikel wat soos voormeld in 'n nuusblad opgeneem word en wat wesenlik deur die redakteur van die nuusblad verander is, ook deur sodanige redakteur onderteken kan word;

University of Fort Hare
Together in Excellence

(b) in the case of a report of a public meeting which is written jointly by two or more persons, it shall be sufficient for the purposes of this subregulation if the report as a whole bears upon the face of it the full names and addresses of the persons by whom it was written; and

(c) in the case of headlines to any newspaper article which is inserted in any newspaper as aforesaid, and bills, placards or posters having reference thereto, which are issued in the ordinary practice of a newspaper, it shall be sufficient for the purposes of this subregulation if the full names and addresses of the persons by whom such headlines, bills, placards or posters were written, and a statement that such headlines, bills, placards or posters were written by such persons, are published in the issue of the newspaper in which such newspaper article is inserted.

(6) Subject to the provisions of proviso (c) to subregulation (5), no person shall print or publish any newspaper or other printed matter in which is inserted or produced any such newspaper article, which fails to bear upon the face thereof the full name and address of the person by whom it was written or produced.

(7) For the purposes of this regulation an election shall be deemed to commence on the date of first publication of the notice referred to in regulation 19.

(8) Any person who contravenes or fails to comply with any provision of this regulation shall be guilty of an offence.

Meetings on premises where sale of liquor usually takes place

60. (1) No person shall hire or use—

(a) any premises on which the sale, by wholesale or retail, of any intoxicating liquor is authorised (whether the authorisation be for consumption of liquor on or off the premises); or

(b) any premises where any intoxicating liquor is sold or is supplied to members of a club, society or association;

or any part of any such premises, as a committee room or for any meeting of voters for the purpose of promoting or procuring the election of a candidate at an election or in connection with arrangements made by any person or party in reference to an election.

(2) No person shall let or make available for use any such premises or part thereof, knowing that it is intended to be so used.

(3) Any agreement entered into in contravention of subregulation (1) or (2) shall be null and void.

(4) Any person who contravenes or fails to comply with any provision of this regulation shall be guilty of an offence.

Consequences to the candidates

61. If upon trial it is proved that any corrupt practice or illegal practice has been committed in reference to the election of a member to the Community Council by or with the knowledge and consent or approval of any candidate at that election, the election of that candidate shall be void and a casual vacancy shall exist.

(b) in die geval van 'n verslag van 'n openbare vergadering wat deur twee of meer persone gesamentlik geskryf is, dit voldoende vir doeleindes van hierdie subregulasie is as die verslag in sy geheel op die voorkant daarvan die volle name en adresse dra van die persone deur wie dit geskryf is; en

(c) in die geval van opskrifte by 'n nuusbladartikel wat soos voormeld in enige nuusblad opgeneem is, en van biljette, plakkate of aanplakbiljette wat daarop betrekking het en wat volgens die gewone gebruik van 'n nuusblad uitgegee word, dit voldoende vir doeleindes van hierdie subregulasie is as die volle name en adresse van die persone deur wie sodanige opskrifte, biljette, plakkate of aanplakbiljette geskryf is, met 'n verklaring dat sodanige opskrifte, biljette, plakkate of aanplakbiljette deur daardie persone geskryf is, gepubliseer word in die uitgawe van die nuusblad waarin sodanige nuusbladartikel opgeneem word.

(6) Behoudens die bepalings van voorbehoudsbepaling (c) van subregulasie (5), mag geen persoon enige nuusblad of ander drukwerk waarin enige sodanige nuusbladartikel opgeneem of geproduseer is, wat nie op die voorkant daarvan die volle naam en adres dra van die persoon deur wie dit geskryf of geproduseer is nie, druk of publiseer nie.

(7) Vir doeleindes van hierdie regulasie word 'n verkiesing geag te begin op die datum van eerste afkondiging van die kennisgewing in regulasie 19 bedoel.

(8) 'n Persoon wat enige van die bepalings van hierdie regulasie oortree of versuim om daaraan te voldoen, begaan 'n misdryf.

Vergaderings op persele waar gewoonlik drank verkoop word

60. (1) Geen persoon mag—

(a) 'n perseel waarop die verkoop van bedwelmende drank, by wyse van groothandel of kleinhandel, deur 'n magtiging gemagtig is (ongeag of dit 'n magtiging is vir verbruik van drank op die perseel of daarbuite); of

(b) 'n perseel waar bedwelmende drank verkoop of verskaf word aan lede van 'n klub, genootskap of vereniging;

of 'n gedeelte van enige sodanige perseel, as 'n komiteekamer of vir 'n vergadering van kiesers ter bevordering of bewerkstelliging van die verkiesing van 'n kandidaat by 'n verkiesing of in verband met reëlings wat deur 'n persoon of party met betrekking tot 'n verkiesing getref is, huur of gebruik nie.

(2) Geen persoon mag sodanige perseel of 'n gedeelte daarvan verhuur of vir gebruik beskikbaar stel nie, wetende dat dit die bedoeling is om dit aldus te gebruik.

(3) Enige ooreenkoms wat strydig met subregulasie (1) of (2) gesluit is, is van nul en gener waarde.

(4) 'n Persoon wat enige van die bepalings van hierdie regulasie oortree of versuim om daaraan te voldoen, begaan 'n misdryf.

Gevolge vir kandidaat

61. As daar by 'n verhoor bewys word dat 'n korrupte bedrywigheid of 'n onwettige bedrywigheid in verband met die verkiesing van 'n lid van die Gemeenskapsraad deur of met die kennis en instemming of goedkeuring van enige kandidaat by daardie verkiesing begaan is, is die verkiesing van daardie kandidaat nietig en bestaan daar 'n toevallige vakature.

University of Fort Hare
Together in Excellence

Vacating of seats by members of the Community Council

62. The seat of a member of the Community Council shall become vacant—

(a) upon the death of such member;

(b) upon receipt by the Secretary of the Community Council of a notice of resignation under the hand of such member;

(c) should such member fail to attend three consecutive general meetings of the Community Council without its special leave;

(d) should such member withdraw from any meeting of the Community Council without the permission of the Chairman;

(e) in the event of such member becoming subject to any of the disqualifications mentioned in regulation 12.

Filling of casual vacancies

63. Should the seat of a member become vacant in terms of regulation 61 or 62 or should the Minister under section 3 (2) of the Act determine that a vacancy exist, the vacancy shall, unless the term of the Community Council expires before such vacancy can be filled, be filled within six months of its occurring, by an election which shall be held in accordance with the provisions of these Regulations.

CHAPTER 6

THE CONVENING OF, THE PROCEDURE AT AND THE CONDUCT OF MEETINGS OF THE COMMUNITY COUNCIL AND COMMITTEES

First general meeting of Community Council

64. The first general meeting of the Community Council shall be convened by the Chief Director on a date, which date shall be within 60 days after the first general election, and at a time and in the manner decided upon by him.

Election of Chairman

65. Immediately after all the members present at the first general meeting of the Community Council and thereafter at the general meeting held in October of each year, have taken their seats the Council shall proceed to the election of the Chairman from the ranks of members of the Council in the manner prescribed in regulation 66.

Manner of election of Chairman

66. (1) A member having first ascertained that the person whom he wishes to propose as Chairman and who is then present, is willing to serve if elected, may propose such person as Chairman and such proposal shall lapse if not seconded.

(2) There shall be no limit to the number of candidates who may be proposed and seconded under subregulation (1), but no member who has already proposed or seconded a candidate shall propose or second any other candidate and no member shall propose or second his own candidature.

(3) The names of the persons duly nominated shall be announced by the person presiding at the relevant meeting of the Community Council (hereinafter in this regulation referred to as the presiding officer) and no debate shall be allowed at the election.

Ontruiming van setels deur lede van die Gemeenskapsraad

62. Die setel van 'n lid van die Gemeenskapsraad raak vakant—

(a) [illegible] die afsterwe van sodanige lid;

(b) by ontvangs deur die Sekretaris van die Gemeenskapsraad van 'n kennisgewing van bedanking onder die handtekening van sodanige lid;

(c) indien sodanige lid versuim om drie opeenvolgende algemene vergaderings van die Gemeenskapsraad by te woon sonder die spesiale toestemming daarvan;

(d) indien sodanige lid hom onttrek aan enige vergadering van die Gemeenskapsraad sonder die toestemming van die Voorsitter;

(e) indien sodanige lid onderhewig raak aan enige van die diskwalifikasies in regulasie 12 genoem.

Vulling van toevallige vakatures

63. Indien die setel van 'n lid ingevolge regulasie 61 of 62 vakant raak of indien die Minister kragtens artikel 3 (2) van die Wet bepaal dat 'n vakature bestaan, moet die vakature, tensy die termyn van die Gemeenskapsraad verstryk voordat sodanige vakature gevul kan word, binne ses maande nadat dit ontstaan het, gevul word deur 'n verkiesing wat ooreenkomstig die bepalings van hierdie Regulasies gehou word.

HOOFSTUK 6

DIE BYEENROEPING VAN, DIE PROSEDURE OP EN DIE HOU VAN VERGADERINGS VAN DIE GEMEENSKAPSRAAD EN KOMITEES

Eerste algemene vergadering van Gemeenskapsraad

64. Die Hoofdirekteur roep die eerste algemene vergadering van die Gemeenskapsraad byeen op 'n datum, wat binne 60 dae na die eerste algemene verkiesing moet wees, en op 'n tyd en wyse soos deur hom bepaal.

Verkiesing van Voorsitter

65. Onmiddellik nadat al die lede wat op die eerste algemene vergadering van die Gemeenskapsraad en daarna op die algemene vergadering gehou in Oktober van elke jaar, hul sitplekke ingeneem het, gaan die Gemeenskapsraad oor tot die verkiesing van die Voorsitter uit die geledere van die lede van die Gemeenskapsraad op die wyse in regulasie 66 voorgeskryf.

Wyse waarop Voorsitter verkies word

66. (1) 'n Lid wat vooraf vasgestel het dat die persoon wat hy as Voorsitter wil voorstel en wat dan teenwoordig is, gewillig is om te dien as hy verkies word, kan sodanige persoon as Voorsitter voorstel en indien sodanige voorstel nie gesekondeer word nie, verval dit.

(2) Daar is geen beperking op die getal kandidate wat kragtens subregulasie (1) voorgestel en gesekondeer kan word nie, maar geen lid wat reeds 'n kandidaat voorgestel of gesekondeer het, mag 'n ander kandidaat voorstel of sekondeer nie en geen lid mag sy eie kandidatuur voorstel of sekondeer nie.

(3) Die name van die behoorlik genomineerde persone moet deur die persoon wat by die betrokke vergadering van die Gemeenskapsraad voorsit (hierna in hierdie regulasie die voorsittende beampte genoem) aangekondig word op die sitting waartydens die verkiesing moet plaasvind, en geen debat word by die verkiesing toegelaat nie.

University of Fort Hare
Together in Excellence

(4) If more than one member be proposed as Chairman, a secret ballot shall be held at which—

(a) the presiding officer shall hand each member present a ballot paper with the names of all the candidates thereon and with an official mark on the reverse side thereof;

(b) every member shall signify the candidate for whom he desires to vote by placing a cross opposite the name of such candidate;

(c) the presiding officer shall call the names of all the members and each member shall, when his name is called, drop his ballot paper into a ballot box;

(d) when all members who wish to vote have done so the presiding officer shall, in the presence of the Community Council, examine the ballot papers with the assistance of such members as the Community Council may decide upon and declare the result of the ballot.

(5) The successful candidate shall be the candidate who obtains the greater or the greatest number of votes cast.

(6) In the event of the number of votes being found to be equal for the candidates who obtained the greater or the greatest number of votes, the presiding officer shall by lot determine the successful candidate.

(7) A member who arrives after the names of the members have been called shall not be entitled to vote.

(8) If only one member is proposed and seconded as Chairman he shall be declared elected.

Manner of election of Deputy Chairman

67. Immediately after the Chairman has been elected, the Community Council shall proceed to the election of a Deputy Chairman and the provisions of regulation 66 shall apply *mutatis mutandis* to the election of a Deputy Chairman: Provided that any reference in regulation 66 to the presiding officer shall be construed as being a reference to the Chairman.

Period of office of Chairman and Deputy Chairman

68. Subject to the provisions of regulation 69, the Chairman and the Deputy Chairman shall hold office until their successors be elected at the general meeting referred to in regulation 65.

Vacation of office by Chairman or Deputy Chairman

69. (1) The Chairman or the Deputy Chairman shall vacate his office—

(a) if his seat as a member of the Community Council becomes vacant or is deemed to have been vacated in terms of the provisions of these Regulations;

(b) if he resigns his office as Chairman or Deputy Chairman by notice, in writing, to the Secretary of the Community Council or makes an announcement to that effect at a meeting of the Community Council.

(2) If the Chairman or the Deputy Chairman vacates his seat otherwise than in pursuance of his resignation announced at a meeting of the Community Council, the Secretary of the Community Council shall at the first ensuing meeting of the Community Council inform it accordingly.

Filling of casual vacancies

70. A casual vacancy in the office of Chairman or of Deputy Chairman shall, if the Community Council is holding a meeting when the vacancy occurs, be filled by the election at that meeting of an incumbent to the office concerned in the manner provided in these

(4) Indien meer as een lid as Voorsitter voorgestel word, word 'n geheime stemming gehou waarby—

(a) die voorsittende beampte aan elke lid teenwoordig 'n stembriefie met die name van al die kandidate daarop en met 'n amptelike merk op die keersy daarvan uitreik;

(b) elke lid die kandidaat vir wie hy wil stem, aandui deur 'n kruis teenoor die naam van sodanige kandidaat te plaas;

(c) die voorsittende beampte die name van al die lede uitroep en elke lid, wanneer sy naam uitgeroep word, sy stembriefie in 'n stembus laat val;

(d) sodra alle lede wat wil stem dit gedoen het, die voorsittende beampte met die hulp van sodanige lede as wat die Gemeenskapsraad bepaal, die stembriefies in teenwoordigheid van die Gemeenskapsraad ondersoek en die uitslag van die stemming bekend maak.

(5) Die suksesvolle kandidaat is die kandidaat wat die grootste getal stemme uitgebring, verkry.

(6) Ingeval daar bevind word dat daar ewe veel stemme uitgebring is op die kandidate wat die grootste getal stemme verkry het, bepaal die voorsittende beampte die suksesvolle kandidaat by loting.

(7) 'n Lid wat opdaag nadat die lede se name uitgeroep is, is nie geregtig om te stem nie.

(8) Indien slegs een lid as Voorsitter voorgestel en gesekondeer word, word hy verkose verklaar.

Wyse waarop Ondervoorsitter verkies word

67. Onmiddellik nadat die Voorsitter verkies is, gaan die Gemeenskapsraad oor tot die verkiesing van 'n Ondervoorsitter en is die bepalings van regulasie 66 *mutatis mutandis* van toepassing by die verkiesing van 'n Ondervoorsitter: Met dien verstande dat 'n verwysing in regulasie 66 na die voorsittende beampte uitgelê word as 'n verwysing na die Voorsitter.

Ampstermyn van Voorsitter en Ondervoorsitter

68. Behoudens die bepalings van regulasie 69, beklee die Voorsitter en die Ondervoorsitter hulle amp totdat hul opvolgers gedurende die algemene vergadering in regulasie 65 bedoel, verkies word.

Ontruiming van amp deur Voorsitter of Ondervoorsitter

69. (1) Die Voorsitter of die Ondervoorsitter ontruim sy amp—

(a) indien sy setel as lid van die Gemeenskapsraad vakant raak of geag word ontruim te gewees het ingevolge die bepalings van hierdie Regulasies;

(b) indien hy uit sy amp as Voorsitter of Ondervoorsitter bedank by skriftelike kennisgewing aan die Sekretaris van die Gemeenskapsraad of 'n aankondiging tot dien effekte op 'n sitting van die Gemeenskapsraad doen.

(2) Indien die Voorsitter of die Ondervoorsitter sy setel ontruim anders as deur die aankondiging van sy bedanking op 'n sitting van die Gemeenskapsraad, verwittig die Sekretaris van die Gemeenskapsraad gedurende die eerste daaropvolgende vergadering van die Gemeenskapsraad die Gemeenskapsraad dienooreenkomstig.

Vulling van toevallige vakatures

70. 'n Toevallige vakature in die amp van Voorsitter of van Ondervoorsitter moet, indien die Gemeenskapsraad in sitting is wanneer die vakature ontstaan, gevul word deur die verkiesing tydens sodanige sitting van 'n bekleër vir die betrokke amp op die wyse in

Regulations and if the Community Council is then not holding a meeting such election shall take place at its next meeting.

Meetings of the Community Council

71. (1) Every meeting of the Community Council shall be held at the seat of the Council which shall be situated within the area for which the Community Council has been established: Provided that the Minister may direct that any such meeting be held at a place situated outside such area.

(2) The Community Council shall hold one general meeting each month.

(3) Notwithstanding the provisions of regulation 78, the Community Council shall at each general meeting thereof, whether or not there is a quorum at such meeting, decide the date and time of the next general meeting.

(4) Subject to the provisions of regulation 64, the Secretary of the Community Council shall, in writing, not less than seven days prior to a general meeting of the Council inform the members, the Chief Director and the Commissioner of the date and time fixed for, and the business to be transacted at, such general meeting.

Special meeting of the Community Council

72. (1) The Chairman may at any time convene a special meeting of the Community Council and only such business as the Chairman may lay before it or approve shall be transacted.

(2) The Secretary of the Community Council shall, in writing, not less than 72 hours prior to a special meeting of the Community Council inform the members, the Chief Director and the Commissioner of the date and time fixed for, and the business to be transacted at, such special meeting.

Meetings of Community Council open to public and press

73. (1) Subject to the provisions of subregulation (2), all meetings of the Community Council shall be open to the public and the press.

(2) If the Community Council is of the opinion that any matter can more conveniently or advantageously be dealt with in the absence of members of the public and the press, it may, subject to the provisions of section 3 (6) of the Act, exclude the public and the press from such meeting while such matter is dealt with.

Chairman to preside at meetings of Community Council

74. The Chairman or, in his absence, the Deputy Chairman shall preside at all meetings of the Community Council or if both the Chairman and the Deputy Chairman are unable through absence or other cause to preside at a meeting, the members present shall, with the Secretary of the Community Council, who shall not be entitled to vote, as presiding officer, nominate one of the members present to preside at such meeting: Provided that the Chairman of the Board or a member of the Board designated by him shall preside at the first general meeting of the Community Council until a Chairman is elected.

hierdie Regulasies bepaal, en indien die Gemeenskapsraad nie dan in sitting is nie, moet sodanige verkiesing op die daaropvolgende vergadering plaasvind.

Vergaderings van die Gemeenskapsraad

71. (1) Elke vergadering van die Gemeenskapsraad word gehou by die setel van die Gemeenskapsraad wat binne die gebied waarvoor die Gemeenskapsraad ingestel is, geleë moet wees: Met dien verstande dat die Minister kan gelas dat enige sodanige vergadering gehou moet word op 'n plek geleë buite sodanige gebied.

(2) Die Gemeenskapsraad hou een algemene vergadering elke maand.

(3) Ondanks die bepalings van regulasie 78, bepaal die Gemeenskapsraad by elke algemene vergadering daarvan, of daar 'n kworum by sodanige vergadering is aldan nie, die datum en tyd van die daaropvolgende algemene vergadering.

(4) Behoudens die bepalings van regulasie 64, stel die Sekretaris van die Gemeenskapsraad die lede, die Hoofdirekteur en die Kommissaris minstens sewe dae voor 'n algemene vergadering van die Gemeenskapsraad skriftelik in kennis van die datum en tyd bepaal vir en die sake wat behandel gaan word gedurende sodanige algemene vergadering.

Spesiale vergadering van die Gemeenskapsraad

72. (1) Die Voorsitter kan te eniger tyd 'n spesiale vergadering van die Gemeenskapsraad byeenroep en slegs die sake wat die Voorsitter voorlê of goedkeur, word behandel.

(2) Die Sekretaris van die Gemeenskapsraad stel die lede, die Hoofdirekteur en die Kommissaris minstens 72 uur voor 'n spesiale vergadering van die Gemeenskapsraad skriftelik in kennis van die datum en tyd bepaal vir en die sake wat behandel gaan word gedurende sodanige spesiale vergadering.

Vergaderings van Gemeenskapsraad vir publiek en pers toeganklik

73. (1) Behoudens die bepalings van subregulasie (2), is alle vergaderings van die Gemeenskapsraad vir die publiek en pers toeganklik.

(2) Indien die Gemeenskapsraad van mening is dat 'n aangeleentheid geriefliker of voordeliger in die afwesigheid van lede van die publiek en die pers behandel kan word, kan hy, behoudens die bepalings van artikel 3 (6) van die Wet, die publiek en die pers van sodanige vergaderings uitsluit terwyl sodanige aangeleentheid behandel word.

Voorsitter sit voor by vergaderings van Gemeenskapsraad

74. Die Voorsitter of, in sy afwesigheid, die Ondervoorsitter, sit voor op alle vergaderings van die Gemeenskapsraad of, as sowel die Voorsitter as die Ondervoorsitter weens afwesigheid of om 'n ander rede nie op 'n vergadering kan voorsit nie, benoem die aanwesige lede onder die voorsitterskap van die Sekretaris van die Gemeenskapsraad, wat nie geregtig is om te stem nie, een van die aanwesige lede om op sodanige vergadering voor te sit: Met dien verstande dat die Voorsitter van die Raad of 'n lid van die Raad deur hom aangewys op die eerste algemene vergadering van die Gemeenskapsraad voorsit totdat 'n Voorsitter verkies is.

Attendance register

75. Every member attending a meeting of the Community Council shall sign the attendance register kept for this purpose.

Order of business

76. The business of each meeting of the Community Council shall, in accordance with the need thereof, be transacted in the following order:

(a) Notice convening the meeting;
(b) obituaries and ceremonial speeches;
(c) applications for leave of absence;
(d) official announcements;
(e) unopposed motions of the Chairman;
(f) minutes of previous meeting;
(g) reports of committees;
(h) questions of which notice has been given;
(i) motions held over from previous meetings;
(j) petitions;
(k) new motions;
(l) other matters.

Business to be transacted at meeting of Community Council

77. No business other than that included in the agenda embodied in the notice convening a meeting shall be transacted at such meeting of the Community Council: Provided that at such meeting, and with the approval of the Chairman, matters of urgency may be raised and submitted to the Council.

Quorum

78. Any number of members exceeding half the number of members of the Community Council shall form a quorum.

Procedure when quorum not present

79. (1) If after the expiration of 20 minutes after the time at which any meeting of the Council is appointed to be held, a quorum is not assembled, no meeting shall take place. If the members present unanimously consent thereto, a further period, not exceeding 10 minutes, may be permitted to enable a quorum to assemble, but the members present may by a majority decision at any stage after 10 minutes past the time appointed for such meeting, request the Chairman to convene a further meeting within 10 days, at which meeting, notwithstanding the provisions of regulation 78, the members present shall form a quorum and if the Chairman complies with such request the provisions of regulation 71 shall *mutatis mutandis* apply.

(2) If during the sitting of any meeting of the Council a quorum is found not to be present no further business shall be conducted until a quorum is reassembled. Should a quorum not be present and 10 minutes elapse after the attention of the Chairman is drawn to the absence of a quorum, the meeting shall stand adjourned until a time to be decided by the Chairman.

(3) If from the number of members voting it appears that a quorum is not present the voting shall be invalid.

Adjournment of meeting

80. If for any reason whatsoever, the business to be transacted at any meeting of the Community Council cannot be completed at such meeting, the Chairman may adjourn such meeting to a date and time to be determined by the Chairman in consultation with the members.

Bywoningsregister

75. Elke lid wat 'n vergadering van die Gemeenskapsraad bywoon, teken sy naam in die bywoningsregister wat vir dié doel gehou word.

Volgorde van werksaamhede

76. Die werksaamhede van elke vergadering van die Gemeenskapsraad word na gelang daarvan of dit nodig is, in die volgende volgorde verrig:

(a) Beskrywingsbrief;
(b) sterflys en seremoniële toesprake;
(c) aansoeke om afwesigheidsverlof;
(d) amptelike aankondigings;
(e) onbestrede mosies van die Voorsitter;
(f) notule van vorige vergadering;
(g) verslae van komitees;
(h) vrae waarvan kennis gegee is;
(i) mosies wat sedert vorige vergaderings oorstaan;
(j) versoekskrifte;
(k) nuwe mosies;
(l) ander aangeleenthede.

Werksaamhede wat by vergadering van Gemeenskapsraad behandel word

77. Geen saak wat nie in die sakelys in die beskrywingsbrief vermeld is nie, word op daardie vergadering van die Gemeenskapsraad behandel nie: Met dien verstande dat, met die toestemming van die Voorsitter, dringende sake op sodanige vergadering geopper en aan die Gemeenskapsraad voorgelê kan word.

Kworum

78. Enige getal lede wat meer as die helfte van die getal lede van die Gemeenskapsraad is, vorm 'n kworum.

Prosedure wanneer kworum nie teenwoordig nie

79. (1) Indien daar na afloop van 20 minute na die tyd waarop 'n vergadering van die Gemeenskapsraad moet begin geen kworum is nie, vind geen vergadering plaas nie. Indien die aanwesige lede dit eens is, kan 'n verdere tydperk van hoogstens 10 minute toegelaat word om 'n kworum te laat byeenkom, maar die aanwesige lede kan, deur 'n meerderheidsbeslissing, te eniger tyd na die verloop van 10 minute na die tyd waarop sodanige vergadering moet begin, die Voorsitter versoek om 'n verdere vergadering binne 10 dae te belê, en by sodanige vergadering, ondanks die bepalings van regulasie 78, maak die lede teenwoordig 'n kworum uit en indien die Voorsitter aan so 'n versoek voldoen, is die bepalings van regulasie 71 *mutatis mutandis* van toepassing.

(2) Indien daar gedurende die sitting van 'n vergadering van die Gemeenskapsraad bevind word dat 'n kworum nie teenwoordig is nie, word geen verdere sake behandel nie totdat 'n kworum opnuut byeengekom het. Indien 'n kworum nie teenwoordig is nie en 10 minute verstryk nadat die Voorsitter se aandag op die gebrek aan 'n kworum gevestig is, word die vergadering verdaag tot 'n tyd deur die Voorsitter bepaal.

(3) As dit uit die getal lede wat deelneem aan 'n stemming, blyk dat 'n kworum nie teenwoordig is nie, is die stemming ongeldig.

Verdaging van vergadering

80. Indien, om watter rede ook al, die sake wat by 'n vergadering van die Gemeenskapsraad behandel staan te word, nie by sodanige vergadering afgehandel kan word nie, kan die Voorsitter sodanige vergadering verdaag tot 'n datum en tyd wat die Voorsitter in oorleg met die lede bepaal.

University of Pretoria
Tegether in Excellence

Questions

81. A member may ask a question at any meeting of the Community Council—

(a) in connection with any matter arising out of or having a bearing on an item in the report of a committee during the discussion of such report;

(b) regarding the exercise of any of the Council's powers or performance of any of its duties or conditions within the area for which the Community Council has been established.

Notice of question, motion or petition to be given

82. (1) Notice of any question, referred to in regulation 81 (b), motion (excluding any unopposed motion of the Chairman) or petition which a member wishes to pose, move or present, as the case may be, at or to any general meeting of the Community Council shall be in writing and signed by such member and shall be forwarded to the Secretary of the Community Council who shall, subject to the provisions of subregulation (2) and regulation 84, place it on the agenda for the next ensuing general meeting.

(2) If any such question, motion or petition is received by the Secretary of the Community Council at least 10 days before the next ensuing general meeting of the Community Council he shall place it on the agenda for such meeting or otherwise he shall place it on the agenda for the next ensuing general meeting.

(3) If a member is not present to pose his question or present his petition when he is called upon to do so by the Chairman, and he has not authorised any other member to do so on his behalf, the question or petition shall lapse.

Chairman may reject certain motions, questions or petitions

83. (1) The Chairman may reject any motion, question or petition which in his opinion will lead to the discussion of a matter already included in the agenda or which does not concern the area for which the Community Council has been established or over which the Council has no jurisdiction or which is not clear and he shall reject any motion or petition which, if it were to be moved or accepted, as the case may be, would be against the law.

(2) If the Chairman so rejects any motion, question or petition he shall inform the Community Council of his decision and shall not call upon the member concerned to move such motion, pose such question or present such petition, as the case may be.

Motion to rescind a resolution passed during the previous three months

84. No motion to rescind a resolution passed by the Community Council during the previous three months or having the same effect as one that has been rejected by the Community Council during the previous three months shall be placed on the agenda unless the notice of such motion is signed by at least three members in addition to the member who wishes to move such motion and after the Community Council has dealt with such motion no member may move a similar motion within six months thereafter.

Procedure on moving a motion

85. (1) When motions come up for discussion, the Chairman shall, subject to the provisions of regulation 83, read out the numbers and names of the movers

Vrae

81. 'n Lid kan op 'n vergadering van die Gemeenskapsraad 'n vraag stel—

(a) oor 'n saak wat voortspruit uit of in verband staan met 'n item van die verslag van 'n komitee tydens die bespreking van sodanige verslag;

(b) betreffende die uitoefening van enige van die Gemeenskapsraad se bevoegdhede, die uitvoering van enige van sy pligte, of toestande binne die gebied waarvoor die Gemeenskapsraad ingestel is.

Wyse waarop kennisgewing van vraag, mosie of versoekskrif geskied

82. (1) Kennis van 'n vraag in regulasie 81 (b) bedoel, 'n mosie (uitgesonderd 'n onbestrede mosie van die Voorsitter) of versoekskrif wat 'n lid wil stel of indien, na gelang van die geval, op 'n vergadering van die Gemeenskapsraad moet skriftelik wees en deur sodanige lid onderteken wees en word aan die Sekretaris van die Gemeenskapsraad gestuur, en behoudens die bepalings van subregulasie (2) en regulasie 84 plaas hy dit op die sakelys van die daaropvolgende algemene vergadering.

(2) Indien sodanige vraag, mosie of versoekskrif deur die Sekretaris van die Gemeenskapsraad minstens 10 dae voor die daaropvolgende algemene vergadering van die Gemeenskapsraad ontvang is, plaas hy dit op die sakelys vir sodanige vergadering, of anders plaas hy dit op die sakelys van die daaropvolgende algemene vergadering.

(3) As 'n lid nie teenwoordig is om sy vraag te stel of sy versoekskrif in te dien nie wanneer hy deur die Voorsitter versoek word om dit te doen en hy nie 'n ander lid gemagtig het om dit namens hom te stel of in te dien nie, verval die vraag of versoekskrif.

Voorsitter kan sekere mosies, vrae of versoekskrifte verwerp

83. (1) Die Voorsitter kan 'n mosie, vraag of versoekskrif verwerp wat na sy mening tot die bespreking sou lei van 'n saak wat reeds in die sakelys vervat is of wat nie op die gebied waarvoor die Gemeenskapsraad ingestel is betrekking het nie of waaroor die Gemeenskapsraad nie regsbevoegdheid het nie of wat nie duidelik is nie, en hy verwerp 'n mosie of versoekskrif wat, as dit voorgestel of aangeneem word, na gelang van die geval, strydig sal wees met die wet.

(2) Indien die Voorsitter 'n mosie, vraag of versoekskrif aldus verwerp, stel hy die Gemeenskapsraad in kennis van sy beslissing en hy versoek nie die betrokke lid om sodanige mosie in te dien, sodanige vraag te stel of sodanige versoekskrif in te dien nie, na gelang van die geval.

Mosie ter herroeping van 'n besluit geneem binne voorafgaande drie maande

84. Geen mosie ter herroeping van 'n besluit wat gedurende die voorafgaande drie maande geneem is of 'n mosie van dieselfde strekking as een wat binne die voorafgaande drie maande deur die Gemeenskapsraad verwerp is, word op die sakelys geplaas nie, tensy die kennisgewing van die mosie deur minstens drie lede, benewens die voorsteller van die mosie, onderteken is, en nadat die Gemeenskapsraad sodanige mosie afgehandel het, mag geen lid weer 'n soortgelyke mosie binne ses maande daarna indien nie.

Prosedure by die indiening van 'n mosie

85. (1) Wanneer mosies aan die orde kom, lees die Voorsitter, behoudens die bepalings van regulasie 83, die nommers en die name uit van die voorstellers van

of all the motions appearing on the agenda and he shall ascertain which motions are unopposed and such unopposed motions shall immediately be carried.

(2) Immediately after such unopposed motions have been carried the Chairman shall, in the order in which the remaining motions appear on the agenda, call upon the members concerned to move such motions.

(3) A member called upon by the Chairman to move a motion shall rise in his place and after making such remarks as he may wish he shall move the motion.

(4) If a member is not present to move a motion when called upon to do so by the Chairman, and he has not authorised any other member to do so on his behalf, the motion shall lapse.

(5) Every motion moved shall require seconding and if a motion is not seconded it shall lapse.

(6) When a motion has been moved and seconded, the Chairman shall read it or cause it to be read after which debate may take place on such motion and may continue, subject to the provisions of these Regulations, for as long as any member who is entitled to speak wishes to speak.

(7) When no more members wish or are entitled to speak the Chairman shall put the motion to the Community Council for its decision.

(8) When an amendment or amendments have been proposed to a motion the Chairman shall first put the amendments and after all amendments have been disposed of, again read and put the original motion or if it has been amended the motion as amended, so as to enable the members of the Community Council to be fully acquainted with the terms thereof.

(9) The order in which amendments shall be put shall be in the discretion of the Chairman.

(10) No member may speak on a motion or amendment after it has been fully put by the Chairman.

Amendments to motions

86. (1) A member who has risen to speak on a motion may propose an amendment to such motion.

(2) Such amendment shall require seconding.

(3) An amendment may take one of the following forms:

(a) To leave out one or more words of the motion;

(b) to insert one or more words in the motion;

(c) to add one or more words at the end of the motion;

(d) to substitute certain other words for certain words contained in the motion.

(4) Members may propose more than one amendment to a motion but a proposal to further amend a proposed amendment shall be out of order.

(5) Debate may take place on any amendment to a motion.

Postponement of motions

87. (1) Any member may move that a motion be postponed or referred to a committee of the Community Council for consideration.

(2) Such motion shall be seconded.

(3) Notwithstanding the provisions of regulation 97 (2), the mover of such motion shall speak for not more than five minutes and the seconder shall not be permitted to speak beyond formally seconding it.

al die mosies wat op die sakelys verskyn, en hy stel vas watter mosies onbestrede is, en sodanige onbestrede mosies word dadelik aangeneem.

(2) Onmiddellik nadat sodanige onbestrede mosies aangeneem is, versoek die Voorsitter die betrokke lede, beurtelings in die volgorde waarin die oorblywende mosies op die sakelys verskyn, om sodanige mosies in te dien.

(3) 'n Lid wat deur die Voorsitter versoek word om 'n mosie in te dien, staan in sy plek op en na enige opmerkings wat hy wens te maak, dien hy die mosie in.

(4) As 'n lid nie teenwoordig is nie om sy mosie in te dien wanneer hy deur die Voorsitter versoek word om dit te doen en hy nie 'n ander lid gemagtig het om dit namens hom in te dien nie, verval die mosie.

(5) Elke mosie ingedien moet gesekondeer word, en as 'n mosie nie gesekondeer word nie, verval dit.

(6) Wanneer 'n mosie ingedien is en gesekondeer is, lees die Voorsitter dit uit, of laat dit uitlees, waarna sodanige mosie gedebatteer kan word en die debat kan, behoudens die bepalings van hierdie Regulasies, so lank aanhou as wat enigiemand wat die reg het om te praat, nog wil praat.

(7) Wanneer daar nie meer lede is wat wens, of geregtig is, om te praat nie, stel die Voorsitter die mosie aan die Gemeenskapsraad vir beslissing.

(8) Wanneer 'n amendement of amendemente op 'n mosie voorgestel is, stel die Voorsitter eers die amendemente en na al die amendemente afgehandel is, lees en stel hy weer die oorspronklike mosie of, indien dit gewysig is, die mosie, soos gewysig, ten einde die lede van die Gemeenskapsraad ten volle vertroud te maak met die bepalings daarvan.

(9) Die volgorde waarin amendemente gestel word, is volgens die diskresie van die Voorsitter.

(10) Geen lid mag oor 'n mosie of 'n amendement praat nadat dit ten volle deur die Voorsitter gestel is nie.

Amendemente op mosies

86. (1) 'n Lid wat opgestaan het om 'n mosie te bespreek, kan 'n amendement op die mosie voorstel.

(2) Sodanige amendement moet gesekondeer word.

(3) 'n Amendement kan een van die volgende vorme aanneem:

(a) Om een of meer van die woorde van die mosie weg te laat;

(b) om een of meer woorde in die mosie in te voeg;

(c) om een of meer woorde aan die einde van die mosie by te voeg;

(d) om sekere woorde van die mosie deur sekere ander woorde te vervang.

(4) Lede kan meer as een amendement op 'n mosie voorstel, maar 'n voorstel vir die verdere wysiging van 'n voorgestelde amendement is buite die orde.

(5) 'n Amendement op 'n mosie kan gedebatteer word.

Uitstel van mosies

87. (1) 'n Lid kan voorstel dat 'n mosie uitgestel of na 'n komitee van die Gemeenskapsraad verwys word vir oorweging.

(2) Sodanige voorstel moet gesekondeer word.

(3) Ondanks die bepalings van regulasie 97 (2), kan die indiener van sodanige voorstel hoogstens vyf minute lank praat en die sekondant word nie toegelaat om te praat nie buiten om dit formeel te sekondeer.

(4) Immediately after such motion has been seconded the Chairman shall put the motion to the Community Council for its decision.

Withdrawal of motions and amendments

88. A motion or an amendment proposed to such motion may be withdrawn at the request of the mover thereof by leave of the Community Council at any time before the question has been fully put.

Moving reports at meetings of Community Council

89. (1) All recommendations of any committee shall be reported to the Council and the chairman of the committee concerned or in his absence a member of the committee called upon by the Chairman of the Council, shall introduce the report by moving that the report of the committee concerned be received.

(2) The Council having agreed to receive the report, the Chairman of the Community Council shall thereupon put the recommendations contained in the various items *seriatim*, unless for good cause he sees fit to vary their order. If the majority of the members of the Council present agree with any recommendation it shall forthwith become a resolution of the Council.

Item to be referred back for further consideration

90. (1) When the report of any committee has been received by the Council and a recommendation in that report is before the Council, any member may move that the item be referred back to such committee for further consideration.

(2) If such motion is carried, the debate on the recommendation shall end forthwith.

Chairman to maintain order

91. Order shall be maintained in the Community Council by the Chairman whose decision on a point of order shall not be open to appeal and shall not be reviewed by the Community Council.

Members to sit down when Chairman rises

92. When the Chairman rises during a meeting of the Community Council every member shall sit down and members shall be silent so that the Chairman may be heard without interruption.

Members to speak standing

93. A member shall speak standing and shall address his observations to the Chair.

Chairman to select speaker

94. If two or more members rise at the same time to speak the Chairman shall select one member and call on him to speak.

Members not speaking to be seated

95. When a member has finished speaking he shall resume his seat and any other member wishing to speak shall rise.

Matters on which members may speak

96. A member may address the Community Council on the question before the Council or upon any amendment proposed thereto, or upon a question or amendment to be proposed by himself, or upon a

(4) Onmiddellik nadat sodanige voorstel gesekondeer is, stel die Voorsitter die voorstel aan die Gemeenskapsraad vir beslissing.

Terugtrekking van mosies en amendemente

88. 'n Mosie of 'n voorgestelde amendement van sodanige mosie kan te eniger tyd voordat die mosie ten volle gestel is, teruggetrek word op versoek van die voorsteller daarvan met die verlof van die Gemeenskapsraad.

Indiening van verslae op vergaderings van Gemeenskapsraad

89. (1) Verslag oor alle aanbevelings van 'n komitee word aan die Gemeenskapsraad gedoen en die voorsitter van die betrokke komitee, of in sy afwesigheid 'n lid van die komitee deur die Voorsitter van die Gemeenskapsraad aangesê, dien die verslag in deur voor te stel dat die verslag van die betrokke komitee in ontvangs geneem word.

(2) Nadat die Gemeenskapsraad besluit het om die verslag in ontvangs te neem, stel die Voorsitter van die Gemeenskapsraad die aanbevelings vervat in die verskillende items *seriatim*, tensy hy goeddunk om hul volgorde te verander. Indien die meerderheid van die aanwesige lede van die Gemeenskapsraad 'n aanbeveling aanvaar, word dit onverwyld 'n besluit van die Gemeenskapsraad.

Item kan terugverwys word vir verdere oorweging

90. (1) Wanneer die verslag van 'n komitee deur die Gemeenskapsraad in ontvangs geneem is en 'n aanbeveling van sodanige verslag voor die Gemeenskapsraad dien, kan 'n lid voorstel dat die item na sodanige komitee terugverwys word vir verdere oorweging.

(2) As sodanige voorstel aangeneem word, eindig die debat oor die aanbeveling onverwyld.

Voorsitter handhaaf orde

91. Orde word in die Gemeenskapsraad deur die Voorsitter gehandhaaf en sy beslissing oor 'n punt van orde is nie onderworpe aan appèl nie en word nie deur die Gemeenskapsraad hersien nie.

Lede moet sit wanneer Voorsitter opstaan

92. Wanneer die Voorsitter gedurende 'n vergadering van die Gemeenskapsraad opstaan, sit elke lid en lede bly stil sodat die Voorsitter ongestoord gehoor kan word.

Lede praat staande

93. Elke lid staan as hy praat en rig sy opmerkings tot die Stoel.

Voorsitter kies spreker

94. Indien twee of meer lede gelyk opstaan om te praat, kies die Voorsitter een lid en versoek hom om te praat.

'n Lid wat nie praat nie, moet sit

95. 'n Lid wat klaar gepraat het, moet sit en enige ander lid wat wil praat, moet opstaan.

Sake waaroor lede kan praat

96. 'n Lid kan oor die mosie voor die Gemeenskapsraad praat of oor amendemente daarop voorgestel, of oor 'n mosie of amendement wat hy self wil voorstel, of oor 'n punt van orde voortspruitende uit die debat,

point of order arising out of debate, but not otherwise and no discussion or debate shall be permitted which will anticipate any matter on the agenda.

Speaking on questions at meetings of Community Council

97. (1) No member shall address the Community Council more than once on the question before the Community Council except in explanation, such explanation being allowed only in case a material part of his speech has been misquoted or misunderstood, and he shall not introduce any new matter and no debate shall be allowed on such explanation.

(2) No member may, without the approval of the Community Council, exceed 10 minutes in speaking on any question.

(3) Notwithstanding the provisions of subregulation (1), the member who introduced the question may reply and such member having so replied, the debate shall be closed and the question put to the vote.

Form of address

98. During proceedings at a meeting of the Community Council members shall refer to one another as "the honourable member" (stating the member's name).

Conduct of members during meetings

99. During a meeting of the Community Council a member shall—

(a) enter or leave the Chamber with decorum;

(b) in the case of a male, be bare-headed while in the Chamber and bow to the Chair when entering or leaving the Chamber or passing to or from his place;

(c) not pass between the Chair and any member speaking;

(d) not address the Chairman by name or any other title save as "Mr Chairman";

(e) not cross the floor of the Chamber unnecessarily;

(f) when crossing from one side of the Chamber to the other, pause in the centre and bow to the Chair;

(g) not read newspapers, books, letters or other documents except such matter therein as may be directly connected with the business then under consideration;

(h) while a member is speaking be silent and not make unseemly interruptions;

(i) when called to order by the Chairman immediately resume his seat; and

(j) when the Community Council adjourns keep his place until the Chairman has left the Chair.

Speeches to be relevant

100. A member shall restrict his observations to the subject under discussion and shall not introduce matters irrelevant to that subject.

Irrelevance or repetition

101. The Chairman after having called the attention of the Community Council to the conduct of a member who persists in irrelevance or tedious repetition of his own or some other member's arguments in debate, may order him to discontinue his speech and resume his seat.

maar anders nie en geen bespreking of debat wat 'n saak wat op die sakelys voorkom, sal vooruitloop, word toegelaat nie.

Die praat oor onderwerpe op vergaderings van Gemeenskapsraad

97. (1) Geen lid spreek die Gemeenskapsraad meer as een maal oor 'n mosie voor die Gemeenskapsraad toe nie, behalwe by wyse van verduideliking, welke verduideliking toegelaat word slegs ingeval 'n wesentlike deel van 'n lid se toespraak verkeerd aangehaal of misverstaan is en hy mag geen nuwe aangeleentheid behandel nie en oor sodanige verduideliking word geen debat toegelaat nie.

(2) Geen lid praat sonder die toestemming van die Gemeenskapsraad langer as 10 minute oor enige mosie nie.

(3) Ondanks die bepalings van subregulasie (1), kan die lid wat 'n mosie ingedien het, repliek lewer en nadat sodanige lid sodanige repliek gelewer het, is die debat gesluit en word die mosie in stemming gebring.

Aanspreekvorm

98. Gedurende verrigtings by 'n vergadering van die Gemeenskapsraad verwys lede na mekaar as "die agbare lid" (die naam van lid moet gemeld word).

Gedrag van lede tydens vergaderings

99. Gedurende vergaderings van die Gemeenskapsraad moet 'n lid—

(a) die Raadsaal met dekorum binnekom of verlaat;

(b) in die geval van 'n man, blootshoof wees terwyl hy in die Raadsaal is en 'n buiging voor die Stoel maak wanneer hy die Raadsaal binnekom of verlaat, of wanneer hy na of van sy sitplek gaan;

(c) nie tussen die Stoel en 'n lid wat aan die woord is, verbygaan nie;

(d) nie die Voorsitter by sy naam of enige ander titel as "Meneer die Voorsitter" aanspreek nie;

(e) nie onnodig oor die vloer van die Raadsaal stap nie;

(f) wanneer hy van een deel van die Raadsaal na 'n ander gaan, in die middel stilstaan en 'n buiging voor die Stoel maak;

(g) nie nuusblaaie, boeke, briewe of ander dokumente lees nie, uitgesonderd sodanige stof daarin as wat regstreeks in verband staan met die aangeleentheid dan onder oorweging;

(h) stilbly terwyl 'n lid aan die woord is, en hom nie onnodig in die rede val nie;

(i) wanneer hy deur die Voorsitter tot orde geroep is, dadelik gaan sit; en

(j) wanneer die Gemeenskapsraad verdaag, in sy sitplek bly totdat die Voorsitter die Stoel verlaat het.

Toesprake moet ter sake wees

100. 'n Lid moet sy opmerkings oor die onderwerp in bespreking beperk, en mag geen sake wat nie op daardie onderwerp betrekking het nie, byhaal nie.

Ontoepaslikheid of herhaling

101. Nadat die Voorsitter die aandag van die Gemeenskapsraad gevestig het op die gedrag van 'n lid wat volhou om aangeleenthede wat nie ter sake is nie te bespreek of om sy eie argumente of dié van 'n ander lid in die debat tot vervelens toe te herhaal, kan hy die lid gelas om sy toespraak te staak en sy sitplek in te neem.

University of Pretoria
Tuks Excellence

When interruption may be made

102. A member shall not interrupt the speech of any other member except—

(a) by rising to a point of order, when the member speaking shall resume his seat and the member interrupting shall merely direct attention to the point which he wishes to bring to notice and submit it to the Chairman for decision; or

(b) to put a relevant question to the speaker with the consent of the Chairman.

Insulting language out of order

103. It shall be out of order to use offensive and insulting language about members of the Community Council.

Imputation of improper motives out of order

104. A member shall not impute improper motives to any other member.

Personal charges out of order

105. A member shall not make a personal charge in reference to any other member.

Offensive expressions about Community Council out of order

106. A member shall not use offensive expressions about the conduct of proceedings at meetings of the Community Council.

Alleged improper conduct

107. The personal conduct or any alleged improper motives of a member shall not be referred to except on a motion moved for that purpose.

Disorderly conduct of members

108. The Chairman shall order a member whose conduct is grossly disorderly or who fails to comply with an order made under regulation 101, to withdraw forthwith from the Chamber for the remainder of the meeting and should he fail to do so the Chairman may cause him to be ejected from the Chamber and take such reasonable steps as are necessary to ensure that such member does not return to the meeting.

Chairman's powers to adjourn or suspend meeting of Community Council

109. In the case of great disorder arising during a meeting of the Community Council the Chairman may adjourn or suspend the meeting for such reasonable period as he may determine.

Appointment of committees of Community Council

110. (1) Any committee of the Community Council shall be appointed by the Council at a meeting of the Council.

(2) The Community Council shall determine the terms of reference and the powers and duties of such committee at such meeting: Provided that it may from time to time at any meeting thereof amend such terms of reference and add to or withdraw any such powers and duties.

(3) Members of a committee to which the Community Council has assigned any of its powers and duties shall remain in office until the day before the day fixed for the holding of the next ensuing general meeting referred to in regulation 65.

Constitution of committees of Community Council

111. A committee shall consist of not less than three and not more than seven members of the Community Council.

Wanneer lede in die rede geval mag word

102. Geen lid mag 'n ander lid wat aan die woord is, in die rede val nie, behalwe—

(a) wanneer hy op 'n punt van orde opstaan, en dan moet die lid wat aan die woord was, gaan sit, en die lid wat opgestaan het, moet slegs die punt noem waarop hy die aandag wil vestig en dit aan die Voorsitter voorlê vir sy beslissing; of

(b) om 'n tersaaklike vraag aan die spreker te stel met die toestemming van die Voorsitter.

Beledigende taal buite die orde

103. Dit is buite die orde om aanstootlike en beledigende taal omtrent lede van die Gemeenskapsraad te gebruik.

Toeskrywing van onbehoorlike motiewe buite die orde

104. 'n Lid mag nie onbehoorlike motiewe aan 'n ander lid toeskryf nie.

Persoonlike aanvalle buite die orde

105. 'n Lid mag nie 'n persoonlike aanval ten opsigte van enige ander lid maak nie.

Aanstootlike uitdrukkings omtrent Gemeenskapsraad buite die orde

106. 'n Lid mag nie aanstootlike uitdrukkings oor die bestuur van verrigtings by vergaderings van die Gemeenskapsraad gebruik nie.

Beweerde onbehoorlike gedrag

107. Daar mag nie verwys word na die persoonlike gedrag of enige beweerde onbehoorlike motiewe van 'n lid nie, behalwe na 'n mosie vir daardie doel ingedien.

Wanordelike gedrag van lid

108. Die Voorsitter gelas 'n lid wie se gedrag uiters wanordelik is of wat versuim om te voldoen aan 'n opdrag gegee kragtens regulasie 101, om die Raadsaal onverwyld vir die res van die vergadering te verlaat en as hy versuim om dit te doen, kan die Voorsitter hom uit die Raadsaal laat verwyder en sodanige redelike stappe doen as wat nodig is om te verseker dat sodanige lid nie na die vergadering terugkeer nie.

Voorsitter se bevoegdhede om vergadering van Gemeenskapsraad te verdaag of op te skort

109. Ingeval groot wanordelikheid gedurende 'n vergadering van die Gemeenskapsraad ontstaan, kan die Voorsitter die vergadering verdaag of opskort vir 'n redelike tydperk deur hom bepaal.

Aanstelling van komitees van Gemeenskapsraad

110. (1) 'n Komitee van die Gemeenskapsraad word aangestel op 'n vergadering van die Gemeenskapsraad.

(2) Die Gemeenskapsraad bepaal die opdragte aan en die bevoegdhede en pligte van sodanige komitee op sodanige vergadering: Met dien verstande dat dit van tyd tot tyd op 'n vergadering daarvan sodanige opdragte kan wysig en tot sodanige bevoegdhede en pligte byvoeg of enige sodanige bevoegdhede en pligte intrek.

(3) Lede van 'n komitee waaraan die Gemeenskapsraad enige van sy bevoegdhede en pligte opgedra het, beklee hul ampte tot die dag wat die dag wat bepaal is vir die hou van die daaropvolgende algemene vergadering in regulasie 65 bedoel, voorafgaan.

Samestelling van komitees van Gemeenskapsraad

111. 'n Komitee bestaan uit minstens drie en hoogstens sewe lede van die Gemeenskapsraad.

Chairman of committee

112. The Community Council shall appoint the chairman of every committee: Provided that if such chairman is unable to be present at any meeting of such committee the committee shall, from their own ranks, elect another chairman whose tenure of office shall be for the day of his election.

Meetings of committees of Community Council

113. (1) A committee shall meet on the date and at the time determined by the chairman thereof in consultation with the members thereof.

(2) The meetings of any committee shall be held in private unless the committee otherwise orders: Provided that this provision shall not be so interpreted as to exclude officials or witnesses necessarily associated with the business of such committee.

(3) Notwithstanding the provisions of subregulation (2), members of the Community Council who are not members of a particular committee thereof may be present at any meeting of such committee and take part in the discussion, but shall not have the power to vote.

Quorum

114. Any number of members exceeding half the number of the members of any committee shall form a quorum.

Procedure when quorum not present

115. (1) If after the expiration of 20 minutes after the time at which any meeting of any committee is appointed to be held, a quorum is not assembled, no meeting shall take place. If the members of the committee present unanimously consent thereto, a further period, not exceeding 10 minutes, may be permitted to enable a quorum to assemble, but the members present may by a majority decision at any stage after 10 minutes past the time appointed for such meeting, request the chairman to convene a further meeting within seven days, at which meeting, notwithstanding the provisions of regulation 114, the members present shall form a quorum.

(2) If during the sitting of any meeting of a committee a quorum is found not to be present no further business shall be conducted until a quorum is reassembled. Should a quorum not be present and 10 minutes elapse after the attention of the chairman is drawn to the absence of a quorum, the meeting shall stand adjourned until a time to be determined by the chairman in consultation with the members thereof present.

(3) If from the number of members voting it appears that a quorum is not present the voting shall be invalid.

How question before Community Council or committee is to be decided

116. All questions before the Community Council or any committee of the Community Council shall be determined by a majority of votes of the members present and in the case of an equality of votes the chairman of the meeting shall have a second or casting vote.

Mode of putting question for decision

117. When the Chairman or chairman of a committee, as the case may be, puts a question for decision, he shall do so by saying: "All agreed?" and if any member says "No" he shall order that a ballot be taken by show of hands and shall then total the number of votes cast for and against the question and declare the number to the Council or committee, as the case may be.

Voorsitter van komitee

112. Die Gemeenskapsraad stel die voorsitter van elke komitee aan: Met dien verstande dat indien sodanige voorsitter nie in staat is om teenwoordig te wees op 'n vergadering van sodanige komitee nie, verkies die komitee uit sie geledere 'n ander voorsitter wie se ampstermyn die dag van sy verkiesing is.

Vergaderings van komitees van Gemeenskapsraad

113. (1) 'n Komitee sit op die datum en tyd deur die voorsitter daarvan bepaal in oorleg met die lede daarvan.

(2) Die vergaderings van 'n komitee is privaat, tensy die komitee anders gelas: Met dien verstande dat hierdie bepaling nie uitgelê word as sou dit beamptes of getuies wat noodsaaklikerwys geassosieer is met die werksaamhede van sodanige komitee uitsluit nie.

(3) Ondanks die bepalings van subregulasie (2), kan lede van die Gemeenskapsraad wat nie lede is van 'n besondere komitee daarvan nie, teenwoordig wees by 'n vergadering van sodanige komitee en aan die bespreking deelneem, maar hulle het nie die reg om te stem nie.

Kworum

114. Enige getal lede wat meer as die helfte van die getal lede van 'n komitee is, vorm 'n kworum.

Prosedure wanneer kworum nie teenwoordig nie

115. (1) Indien daar na verloop van 20 minute na die tyd waarop 'n vergadering van 'n komitee moet begin geen kworum is nie, vind geen vergadering plaas nie. Indien die aanwesige lede van die komitee dit eens is, kan 'n verdere tydperk van hoogstens 10 minute toegelaat word om 'n kworum te laat byeenkom, maar die aanwesige lede kan, deur 'n meerderheidsbeslissing te eniger tyd na verloop van 10 minute na die tyd waarop sodanige vergadering moet begin, die voorsitter versoek om 'n verdere vergadering binne sewe dae te belê, en by sodanige vergadering, ondanks die bepalings van regulasie 114, maak die lede teenwoordig 'n kworum uit.

(2) Indien daar gedurende die sitting van 'n vergadering van 'n komitee bevind word dat 'n kworum nie teenwoordig is nie, word geen verdere sake behandel nie totdat 'n kworum opnuut byeengekom het. Indien 'n kworum nie teenwoordig is nie en 10 minute verstryk nadat die voorsitter se aandag op die gebrek aan 'n kworum gevestig is, word die vergadering verdaag tot 'n tyd deur die voorsitter in oorleg met die aanwesige lede daarvan bepaal.

(3) As dit uit die getal lede wat deelneem aan 'n stemming, blyk dat 'n kworum nie teenwoordig is nie, is die stemming ongeldig.

Hoe mosie voor Gemeenskapsraad of komitee beslis word

116. Alle mosies voor die Gemeenskapsraad of 'n komitee van die Gemeenskapsraad word beslis deur 'n meerderheid van stemme van die aanwesige lede en by 'n staking van stemme het die voorsitter van die vergadering 'n tweede of beslissende stem.

Wyse waarop mosie vir beslissing voorgelê word

117. Wanneer die Voorsitter of die voorsitter van 'n komitee, na gelang van die geval, 'n mosie vir beslissing voorlê, doen hy dit deur te sê "Stem almal saam?" en indien enige lid "Nee" sê, gelas hy 'n stemming deur die opsteek van hande en hy tel die getal stemme uitgebring vir en teen die mosie en daarna maak hy die getalle bekend aan die Gemeenskapsraad of komitee, na gelang van die geval.

Minutes of meetings

118. (1) The Secretary of the Community Council shall cause the minutes of the proceedings at any meeting of the Community Council and meetings of any committee of the Community Council to be recorded and there shall be noted in such minutes the names of every member and official present.

(2) Such minutes shall be confirmed at the next ensuing general meeting of the Community Council or the next ensuing meeting of such committee and the Chairman or the chairman of the committee, as the case may be, shall thereafter sign them.

(3) If a copy of such minutes has been sent to each member at least two days prior to the meetings referred to in subregulation (2), such minutes shall be taken as read with a view to confirmation.

(4) No motion, proposal or discussion shall be allowed on the minutes, except as to their accuracy.

CHAPTER 7

GENERAL

Member to look after interest of ward he represents

119. In addition to any other duties imposed on a member of the Community Council, such member shall, on behalf of the ward he represents and within the area for which the Community Council has been established look after the interests of such ward and keep the residents of the ward concerned informed of, and advise such residents regarding, matters affecting the general interest of the persons residing in such ward or area.

Provisions as to members being interested in contracts with the Community Council

120. No member of the Community Council shall, either on his own behalf or on behalf of a partnership in which he is interested, be concerned in or interested in any transaction, contract or arrangement whatsoever made by or with the Community Council with the exception of the purchase and sale or hiring of sites, premises or buildings.

Member not to have financial interest in matter before meeting

121. A member of the Community Council shall, at any meeting of the Community Council or any committee thereof, not be present during the discussion of or the voting on any matter in which either he, his spouse, his partner, the partner of his spouse, his employer (except the State) or the employer (except the State) of his spouse has a direct or indirect financial interest.

Payment of members

122. There shall be payable to members of the Community Council such allowances as the Minister after consultation with the Community Council and the Board shall determine.

General penalty

123. Any person who is convicted of an offence in terms of these Regulations shall be liable to a fine not exceeding R200 or, in default of payment, imprisonment for a period not exceeding six months.

Certain provisions applicable to persons referred to in section 3 (6) of the Act

124. The provisions of regulations 92 to 96 inclusive, and 98 to 106 inclusive, shall *mutatis mutandis* apply to any persons referred to in section 3 (6) of the Act.

Notule van vergaderings

118. (1) Die Sekretaris van die Gemeenskapsraad laat die notule van die verrigtings van 'n vergadering van die Gemeenskapsraad en vergaderings van 'n komitee van die Gemeenskapsraad hou en die naam van elke lid en beampte aanwesig word in sodanige notule aangeteken.

(2) Sodanige notule word bekragtig by die daaropvolgende algemene vergadering van die Gemeenskapsraad of die daaropvolgende vergadering van sodanige komitee en daarna onderteken die Voorsitter of die voorsitter van die komitee, na gelang van die geval, die notule.

(3) Indien 'n afskrif van sodanige notule minstens twee dae voor die vergaderings in subregulasie (2) bedoel aan elke lid gestuur is, word aanvaar dat sodanige notules met die oog op bekragtiging gelees is.

(4) Geen mosie, voorstel of bespreking ten opsigte van die notule, behalwe wat die juistheid daarvan betref, word toegelaat nie.

HOOFSTUK 7

ALGEMEEN

Lid behartig belange van wyk wat hy verteenwoordig

119. Benewens enige ander pligte aan 'n lid van die Gemeenskapsraad opgedra, moet 'n lid namens die wyk wat hy verteenwoordig die belange van daardie wyk binne die gebied waarvoor die Gemeenskapsraad ingestel is behartig en die inwoners van die betrokke wyk ingelig hou van en adviseer oor aangeleenthede rakende die algemene belang van die persone wat in sodanige wyk of gebied woon.

Bepalings aangaande lede wat belang het by kontrakte met Gemeenskapsraad

120. Geen lid van die Gemeenskapsraad mag òf vir homself òf namens 'n vennootskap waarin hy 'n belang het, betrokke wees by of 'n belang hê in enige transaksie, kontrak of reëling hoegenaamd aangegaan deur of met die Gemeenskapsraad, met uitsondering van die koop en verkoop of verhuur van persele of geboue.

Lid mag nie 'n geldelike belang in aangeleentheid voor vergadering hê nie

121. 'n Lid van die Gemeenskapsraad mag nie by 'n vergadering van die Gemeenskapsraad of 'n komitee daarvan teenwoordig wees nie tydens die bespreking van of stemming oor enige aangeleentheid waarin hy, sy eggenote, sy vennoot, die vennoot van sy eggenote, sy werkgewer (behalwe die Staat) of die werkgewer (behalwe die Staat) van sy eggenote, regstreeks of onregstreeks 'n geldelike belang het.

Betaling van lede

122. Die toelae wat die Minister na oorleg met die Gemeenskapsraad en die Raad bepaal, word aan die lede van die Gemeenskapsraad betaal.

Algemene strafbepaling

123. Iemand wat skuldig bevind word aan 'n misdryf ingevolge hierdie Regulasies is strafbaar met 'n boete van hoogstens R200 of, by wanbetaling, gevangenisstraf vir 'n tydperk van hoogstens ses maande.

Sekere bepalings van toepassing op persone in artikel 3 (6) van die Wet bedoel

124. Die bepalings van regulasies 92 tot en met 96 en 98 tot en met 106 is *mutatis mutandis* van toepassing op 'n persoon in artikel 3 (6) van die Wet bedoel.

IN LUMINE TUO VIDEBIMUS LUMEN
Together in Excellence

ANNEXURE A
COMMUNITY COUNCIL

Nomination of candidate for election of a member of the Community Council for ward .....

We, the undersigned .....,
registered as voters in ward ....., hereby nominate (name of candidate) .....
for election as a member of the
Community Council for ward .....

Name (to be printed)	Identity document number	Address	Signature
1.			
2.			
3.			
4.			
5.			
6.			
7.			
8.			
9.			
10.			

ACCEPTANCE OF NOMINATION BY CANDIDATE

I, ...,
Identity document No. ....., residing at .....,
hereby accept nomination for the election described above.

Date .....

Candidate's signature

ANNEXURE B
COMMUNITY COUNCIL
APPOINTMENT OF AGENT

This is to certify that I have appointed .....
(Identity document No. .....), of .....
(address) .....,
to be my agent to attend on my behalf at polling station
..... in ward ..... /the
counting of votes on/during the period .....

Candidate .....
(Identity document No. .....)

Address of candidate .....

Date .....

ANNEXURE C
COMMUNITY COUNCIL
DECLARATION OF SECRECY

I, ...,
do hereby solemnly promise and declare that I will not at the election of members of the ..... Community Council to be held on ..... do anything forbidden by regulation 52 of the ..... which I have read and which I fully understand.

.....
*Electoral Officer
*Presiding Officer
*Polling Officer
*Counting Officer
*Candidate
*Agent
*Witness

Address .....

Date .....

The above declaration was made and subscribed before me at ....., this ..... day of ..... 19.....

.....
*Justice of the Peace
*Commissioner of Oaths
*Electoral Officer
*Presiding Officer

* Delete whichever is not applicable.

AANHANGSEL A
GEMEENSKAPSRAAD

Nominasie van 'n kandidaat vir verkiesing van 'n lid van die Gemeenskapsraad vir wyk .....

Ons, die ondergetekendes .....,
wat in wyk ..... as kiesers geregistreer is, nomineer hierby (naam van kandidaat) .....
vir verkiesing as lid van die .....
Gemeenskapsraad in wyk .....

Naam (in drukskrif)	Identiteits-dokument-nommer	Adres	Hand-tekening
1.			
2.			
3.			
4.			
5.			
6.			
7.			
8.			
9.			
10.			

AANVAARDING VAN NOMINASIE DEUR KANDIDAAT

Ek, ...,
Identiteitsdokumentnommer .....,
wat by ..... woon, aanvaar hierby die nominasie vir die verkiesing hierbo beskryf.

Datum .....

Kandidaat se handtekening

AANHANGSEL B
GEMEENSKAPSRAAD
AANSTELLING VAN AGENT

Hierby word gesertifiseer dat ek .....
(Identiteitsdokumentnommer .....), van
(adres) .....,
aangestel het as agent om namens my teenwoordig te wees by stemburo ..... in wyk ..... /die
tel van stemme op/gedurende die tydperk .....

Kandidaat .....
(Identiteitsdokumentnommer .....)

Adres van kandidaat .....

Datum .....

AANHANGSEL C
GEMEENSKAPSRAAD
VERKLARING VAN GEHEIMHOUDING

Ek, ...,
beloof hierby pligtig en verklaar dat ek by die verkiesing van lede van die ..... Gemeenskapsraad wat op ..... gehou word, niks sal doen nie wat by regulasie 52 van die ..... verbode is, wat ek gelees het en volkome begryp.

.....
*Verkiesingsbeampte
*Voorsittende beampte
*Stemopnemer
*Telbeampte
*Kandidaat
*Agent
*Getuie

Adres .....

Datum .....

Bostaande verklaring is voor my afgelê en onderteken te ..... op hede die ..... dag van ..... 19.....

.....
*Vrederegter
*Kommissaris van Ede
*Verkiesingsbeampte
*Voorsittende beampte

* Skrap wat nie van toepassing is nie.

ANNEXURE D
FORM OF FRONT OF BALLOT PAPER

TEENBLAD
COUNTERFOIL

No.....

Gemeenskaps-raadsverkiesing

Community Council Election

Wyk
Ward.....

Datum
Date.....

Volgnommer van kieser

Serial No. of voter

.....

Stem slegs vir een kandidaat.

Stem deur 'n X te maak in die vierkant teenoor die naam van die kandidaat vir wie u wil stem.

Vote for one candidate only.

Record your vote by placing an X in the square opposite the name of the candidate for whom you wish to vote.

FORM OF BACK OF BALLOT PAPER

Amptelike merk

Official mark

Verkiesing van 'n lid van die Gemeenskapsraad
Election of a member of the.....Community Council
vir die wyk
for the ward of.....
Datum
Date.....

ANNEXURE E
BALLOT PAPER RETURN

Election of a member of the.....Community
Council for ward.....held on.....
Polling station.....

Ballot papers received	Number	Ballot papers accounted for	Number
Ballot papers: Nos..... to..... inclusive		Ballot papers in ballot box.....	
		Unused ballot papers: Nos..... to..... inclusive	
		Spoiled ballot papers	
		Tendered ballot papers	
Total number received		Total number accounted for.....	

I hereby certify that the above is a correct return of all the ballot papers supplied to me.

Dated this.....day of.....19.....

Place.....

Presiding Officer

ANNEXURE F
LABEL

Election of a member of the.....Community
Council for ward.....
Contents.....
Date of poll.....

*Presiding Officer
*Electoral Officer

* Delete whichever is not applicable.

AANHANGSEL D
VORM VAN VOORKANT VAN STEMBRIEFIE

TEENBLAD
COUNTERFOIL

No.....

Gemeenskaps-raadverkiesing

Community Council Election

Wyk
Ward.....

Datum
Date.....

Volgnommer van kieser

Serial No. of voter

.....

Stem slegs vir een kandidaat.

Stem deur 'n X te maak in die vierkant teenoor die naam van die kandidaat vir wie u wil stem.

Vote for one candidate only.

Record your vote by placing an X in the square opposite the name of the candidate for whom you wish to vote.

VORM VAN AGTERKANT VAN STEMBRIEFIE

Amptelike merk

Official mark

Verkiesing van 'n lid van die Gemeenskapsraad
Election of a member of the.....Community Council
vir die wyk
for the ward of.....
Datum
Date.....

AANHANGSEL E
STEMBRIEFOPGAWE

Verkiesing van 'n lid van die.....
Gemeenskapsraad vir wyk.....gehou op.....
Stemburo.....

Stembriewe ontvang	Getal	Verantwoorde stembriewe	Getal
Stembriewe: No.'s..... tot en met.....		Stembriewe in stembus.....	
		Ongebruikte stembriewe: No.'s..... tot en met.....	
		Bedorwe stembriewe..	
		Aangebode stembriewe.....	
Totale getal ontvang..		Totale getal verantwoord.....	

Ek verklaar hierby dat bostaande 'n juiste opgawe is van alle stembriewe aan my verskaf.

Gedateer op hede die.....dag van.....19.....

Plek.....

Voorsittende beampte

AANHANGSEL F
ETIKET

Verkiesing van 'n lid van die.....Gemeenskapsraad
vir wyk.....
Inhoud.....
Datum van stemming.....

*Voorsittende beampte
*Verkiesingsbeampte

* Skrap wat nie van toepassing is nie.

IN LUMINE TUO VIDEBIMUS LUMEN
University of Fort Hare
Together in Excellence

AGROCHEMOPHYSICA

This publication is a continuation of the South African Journal of Agricultural Science Vol. 1 to 11, 1958-1968 and deals with Biochemistry, Biometry, Soil Science, Agricultural Engineering, Agriculutural Meteorology and Analysis Techniques. Four parts of the journal are published annually.

Contributions of scientific merit on agricultural research are invited for publication in this journal. Directions for the preparation of such contributions are obtainable from the Director, Agricultural Information, Private Bag X144, Pretoria, to whom all communications in connection with the journal should be addressed.

The journal is obtainable from the above-mentioned address at R1,50 per copy or R6 per annum, post free (Other countries R1,75 per copy or R7 per annum).

Sales tax must accompany inland orders.

AGROCHEMOPHYSICA

Hierdie publikasie is 'n voortsetting van die Suid-Afrikaanse Tydskrif vir Landbouwetenskap Jaargang 1 tot 11, 1958 1968 en bevat artikels oor Biochemie, Biometrika, Grondkunde, Landbou-ingenieurswese, Landbouweerkunde en Ontledingstegnieke. Vier dele van die tydskif word per jaar gepubliseer.

Verdienstelike landboukundige bydraes van oorspronklike wetenskaplike navorsing word vir plasing in hierdie tydskrif verwelkom. Voorskrifte vir die opstel van sulke bydraes is verkrygbaar van die Direkteur, Landbou-inlingting, Privaatsak X144, Pretoria, aan wie ook alle navrae in verband met die tydskrif gerig moet word.

Die tydskrif is verkrygbaar van bogenoemde adres teen R1,50 per eksemplaar of R6 per jaar, posvrý (Buitelands R1,75 per eksemplaar of R7 per jaar).

Verkoopbelasting moet by binnelandse bestellings ingesluit word.

University of Fort Hare
Together in Excellence

BOTHALIA

Bothalia is a medium for the publication of botanical papers dealing with the flora and vegetation of Southern Africa. One or two parts of the journal are published annually.

The following parts are available:

Vol. 3 Part 1 out of print
2 1937 75c
3 1938 75c
4 1939 75c

Vol. 4 Part 1 1941 75c
2 1942 75c
3 1948 75c
4 1948 75c

Vol. 5 1950 R3

Vol. 6 Part 1 1951 R1,50
2 1954 R2,50
3 1956 R2
4 1957 R2

Vol. 7 Part 1 1958 R2
2 1960 R3
3 1961 R3
4 1962 R3

Vol. 8 Part 1 1962 R3
2 1964 R3
3 1965 R3
4 1965 R3

Supplement

Vol. 9 Part 1 1966 R3
2 1967 R3
3 and 4
1969 R6

Vol. 10 Part 1 1969 R3
2 1971 R3
3 1971 R3
4 1972 R3

Vol. 11 Part 1 and 2
1973 R6
3 1974 R3
4 1975 R3

Vol. 12 Part 1 1976 R5
2 1977 R5
3 1978 R7,50

Obtainable from the Director, Division of Agricultural Information, Private Bag X144, Pretoria.

Sales tax must accompany all inland orders.

BOTHALIA

Bothalia is 'n medium vir die publikasie van plantkundige artikels oor die flora en plantegroei van Suidelike Afrika. Een of twee dele van die tydskrif word jaarliks gepubliseer.

Die volgende dele is beskikbaar:

Vol. 3 Deel 1 uit druk
2 1937 75c
3 1938 75c
4 1939 75c

Vol. 4 Deel 1 1941 75c
2 1942 75c
3 1948 75c
4 1948 75c

Vol. 5 1950 R3

Vol. 6 Deel 1 1951 R1,50
2 1954 R2,50
3 1956 R2
4 1957 R2

Vol. 7 Deel 1 1958 R2
2 1960 R3
3 1961 R3
4 1962 R3

Vol. 8 Deel 1 1962 R3
2 1964 R3
3 1965 R3
4 1965 R3

Supplement

Vol. 9 Deel 1 1966 R3
2 1967 R3
3 en 4
1969 R6

Vol. 10 Deel 1 1969 R3
2 1971 R3
3 1971 R3
4 1972 R3

Vol. 11 Deel 1 en 2
1973 R6
3 1974 R3
4 1975 R3

Vol. 12 Deel 1 1976 R5
2 1977 R5
3 1978 R7,50

Verkrygbaar van die Direkteur, Afdeling Landbou-inligting, Privaatsak X144, Pretoria.

Verkoopbelasting moet by alle binnelandse bestellings ingesluit word.

CONTENTS

No.		Page No.	Gazette No.
Co-operation and Development, Department of			
Government Notices			
R. 1769	Community Councils Act (125/1977): Establishment: Tweeling	1	7204
R. 1770	do.: Regulations: Tweeling	1	7204
R. 1771	do.: Establishment: Edenville	31	7204
R. 1772	do.: Regulations: Edenville	32	7204

INHOUD

No.		Bladsy No.	Staatskoerant No.
Samewerking en Ontwikkeling, Departement van			
Goewermentskennisgewings			
R. 1769	Wet op Gemeenskapsrade (125/1977): Instelling: Tweeling	1	7204
R. 1770	do.: Regulasies: Tweeling	1	7204
R. 1771	do.: Instelling: Edenville	31	7204
R. 1772	do.: Regulasies: Edenville	32	7204

IN LUMINE TUO VIDEBIMUS LUMEN
University of Fort Hare
Together in Excellence

7205

University of Fort Hare
Together in Excellence

STAATSKOERANT
VAN DIE REPUBLIEK VAN SUID-AFRIKA

REPUBLIC OF SOUTH AFRICA
GOVERNMENT GAZETTE

REGULASIEKOERANT No. 3064 PRYS + 1c AVB 20c PRICE + 1c GST REGULATION GAZETTE No. 3064
As 'n Nuusblad by die Poskantoor Geregistreer BUITELANDS 30c ABROAD *Registered at the Post Office as a Newspaper*
POSVRY · POST FREE

VOL. 183] KAAPSTAD, 5 SEPTEMBER 1980 [No. 7205
CAPE TOWN, 5 SEPTEMBER 1980

IN LUMINE TUO VIDEBIMUS LUMEN
University of Fort Hare
Together in Excellence

GOEWERMENTSKENNISGEWINGS

DEPARTEMENT VAN MANNEKRAGBENUTTING

R.1826] [5 September 1980

WET OP NYWERHEIDSVERSOENING, 1956

BOUNYWERHEID, QUEENSTOWN

Ek, STEPHANUS PETRUS BOTHA, Minister van Mannekragbenutting, verklaar hierby—

(a) kragtens artikel 48 (1) *(a)* van die Wet op Nywerheidsversoening, 1956, dat die bepalings van die Ooreenkoms wat in die Bylae hiervan verskyn en op die Bounywerheid betrekking het, met ingang van die tweede Maandag na die datum van publikasie van hierdie kennisgewing en vir die tydperk wat op 30 September 1981 eindig, bindend is vir die werkgewersorganisasie en die vakvereniging wat genoemde Ooreenkoms aangegaan het en vir die werkgewers en werknemers wat lede van genoemde organisasie of vereniging is;

(b) kragtens artikel 48 (1) *(b)* van genoemde Wet, dat die bepalings van genoemde Ooreenkoms, uitgesonderd dié vervat in klousules 1 (1), 2, 27, 29, 30 en 33, met ingang van die tweede Maandag na die datum van publikasie van hierdie kennisgewing en vir die tydperk wat op 30 September 1981 eindig, bindend is vir alle ander werkgewers en werknemers as dié genoem in paragraaf *(a)* van hierdie kennisgewing, wat betrokke is by of in diens is in genoemde Nywerheid in die landdrosdistrik Queenstown; en

(c) kragtens artikel 48 (3)*(a)* van genoemde Wet, dat die bepalings van genoemde Ooreenkoms, uitgeson-

GOVERNMENT NOTICES

DEPARTMENT OF MANPOWER UTILISATION

R.1826] [5 September 1980

INDUSTRIAL CONCILIATION ACT, 1956

BUILDING INDUSTRY, QUEENSTOWN

I, STEPHANUS PETRUS BOTHA, Minister of Manpower Utilisation, hereby—

(a) in terms of section 48 (1) *(a)* of the Industrial Conciliation Act, 1956, declare that the provisions of the Agreement which appears in the Schedule hereto and which relates to the Building Industry, shall be binding, with effect from the second Monday after the date of publication of this notice and for the period ending 30 September 1981, upon the employers' organisation and the trade union which entered into the said Agreement and upon the employers and employees who are members of the said organisation or union;

(b) in terms of section 48 (1) *(b)* of the said Act, declare that the provisions of the said Agreement, excluding those contained in clauses 1 (1), 2, 27, 29, 30 and 33, shall be binding, with effect from the second Monday after the date of publication of this notice and for the period ending 30 September 1981, upon all employers and employees other than those referred to in paragraph *(a)* of this notice, who are engaged or employed in the said Industry in the Magisterial District of Queenstown; and

(c) in terms of section 48 (3) *(a)* of the said Act, declare that in the Magisterial District of Queenstown and

derd dié vervat in klousules 1 (1), 2, 5 (3) *(b)*, 27, 29, 30 en 33, met ingang van die tweede Maandag na die datum van publikasie van hierdie kennisgewing en vir die tydperk wat op 30 September 1981 eindig, in die landdrosdistrik Queenstown *mutatis mutandis* bindend is vir alle persone wat nie werknemers is nie en wat in diens is in genoemde Nywerheid by dié werkgewers vir wie enigeen van genoemde bepalings ten opsigte van werknemers bindend is en vir daardie werkgewers ten opsigte van sodanige persone in hul diens.

S. P. BOTHA
Minister van Mannekragbenutting

with effect from the second Monday after the date of publication of this notice and for the period ending 30 September 1981, the provisions of the said Agreement, excluding those contained in clauses 1 (1), 2, 5 (3) *(b)*, 27, 29, 30 and 33, shall *mutatis mutandis* be binding upon all persons who are not employees and who are employed in the said Industry by the employers upon whom any of the said provisions are binding in respect of employees and upon those employers in respect of such persons in their employ.

S. P. BOTHA
Minister of Manpower Utilisation

BYLAE

NYWERHEIDSRAAD VIR DIE BOUNYWERHEID, QUEENSTOWN

OOREENKOMS

ingevolge die Wet op Nywerheidsversoening, 1956, gesluit deur en aangegaan tussen die

Building Industries Federation (South Africa)

(hierna die „werkgewers" of die „werkgewersorganisasie" genoem), aan die een kant, en die

Amalgamated Union of Building Trade Workers of South Africa

(hierna die „werknemers" of die „vakvereniging" genoem), aan die ander kant,

wat die partye is by die Nywerheidsraad vir die Bounywerheid, Queenstown.

1. Toepassingsbestek van Ooreenkoms

(1) Hierdie Ooreenkoms moet in die landdrosdistrik Queenstown nagekom word deur die werkgewers en werknemers in die Bounywerheid wat onderskeidelik lede van die werkgewersorganisasie of die vakvereniging is.

(2) Ongeag subklousule (1), is—

(a) hierdie Ooreenkoms op vakleerlinge van toepassing slegs in soverre dit nie onbestaanbaar is met die Wet op Vakleerlinge, 1944, of met 'n kontrak of voorwaardes daarkragtens aangegaan of gestel nie.

(b) hierdie Ooreenkoms op leerlinge van toepassing slegs in soverre dit nie onbestaanbaar is met die Wet op Opleiding van Ambagsmanne, 1951, of enige voorwaardes daarkragtens gestel nie;

2. Geldigheidsuur

Hierdie Ooreenkoms tree in werking op dié datum wat die Minister van Mannekragbenutting ingevolge artikel 48 van die Wet vaststel en bly van krag vir 'n tydperk van een jaar of vir dié tydperk wat hy bepaal.

3. Woordomskrywing

Alle uitdrukkings wat in hierdie Ooreenkoms gebesig en in die Wet op Nywerheidsversoening, 1956, omskryf word, het dieselfde betekenis as in daardie Wet, waar daar van 'n wet melding gemaak word, omvat dit alle wysigings van sodanige wet, en indien dit onbestaanbaar met die samehang is, beteken—

„Wet" die Wet op Nywerheidsversoening, 1956;

„vakleerling" 'n werknemer in diens kragtens 'n skriftelike vakleerlingskontrak wat ingevolge die Wet op Vakleerlinge, 1944, geregistreer is, en omvat dit 'n minderjarige wat ingevolge daardie wet vir 'n proeftydperk in diens is;

„Bounywerheid" of „Nywerheid", sonder om die gewone betekenis van die woord enigsins te beperk, die Nywerheid waarin werkgewers en werknemers met mekaar geassosieer is vir die oprigting, voltooiing, opknapping, herstel, onderhoud of verbouing van geboue en bouwerke en/of die vervaardiging van artikels wat gebruik word by die oprigting, voltooiing of verbouing van geboue en bouwerke, ongeag of die verrigting van die werk, die bereiding van die materiaal of die maak van die nodige artikels op die terrein van dié geboue of bouwerke of elders geskied, en omvat dit alle werk wat uitgevoer of verrig word deur persone daarin wat in die volgende bedrywe of onderafdelings daarvan werksaam is:

SCHEDULE

INDUSTRIAL COUNCIL FOR THE BUILDING INDUSTRY, QUEENSTOWN

AGREEMENT

in accordance with the provisions of the Industrial Conciliation Act, 1956, made and entered into by and between the

Building Industries Federation (South Africa)

(hereinafter referred to as the "employers" or the "employers' organisation"), of the one part, and the

Amalgamated Union of Building Trade Workers of South Africa

(hereinafter referred to as the "employees" or the "trade union"), of the other part,

being parties to the Industrial Council for the Building Industry, Queenstown.

1. Scope of Application of Agreement

(1) The terms of this Agreement shall be observed in the Magisterial District of Queenstown by the employers and employees in the Building Industry who are members of the employers' organisation or the trade union respectively.

(2) Notwithstanding the provisions of subclause (1)—

(a) the terms of this Agreement shall apply to apprentices only in so far as they are not inconsistent with the provisions of the Apprenticeship Act, 1944, or any contract entered into or any conditions fixed thereunder;

(b) the terms of this Agreement shall apply to trainees only in so far as they are not inconsistent with the provisions of the Training of Artisans Act, 1951, or any conditions fixed thereunder.

2. Period of Operation

This Agreement shall come into operation on such date as may be specified by the Minister of Manpower Utilisation in terms of section 48 of the Act, and shall remain in force for a period of one year or for such period as may be determined by him.

3. Definitions

Any expressions used in this Agreement which are defined in the Industrial Conciliation Act, 1956, shall have the same meaning as in that Act, and any reference to an Act shall include any amendments of such Act, and unless inconsistent with the context—

"Act" means the Industrial Conciliation Act, 1956;

"apprentice" means an employee serving under a written contract of apprenticeship registered under the provisions of the Apprenticeship Act, 1944, and includes a minor employed on probation under that Act;

"Building Industry" or "Industry" means, without in any way limiting the ordinary meaning of the expression, the Industry in which employers and employees are associated for the purpose of erecting, completing, renovating, repairing, maintaining or altering buildings and structures and/or the making of articles for use in the erection, completion or alteration of buildings and structures, whether the work is performed, the material prepared, or the necessary articles are made on the sites of the buildings or structures or elsewhere, and shall include all work executed or carried out by persons therein who are engaged in the following trades or subdivisions thereof:

VIDE BIMUS LUMINE TUO
University of Fort Hare
Together in Excellence

Asfaltwerk, wat die volgende insluit: Asfaltwerk aan vloere en dakke, die lê van malthoid- of rubbervloere en die waterdigting van kelderverdiepings of fondamente;

messelwerk, wat die volgende insluit: Betonwerk en die vassit van betonblokke, die beteeling van mure en vloere, voegstryking, plavei- en mosaiekwerk, voorwerk met leiklip, marmer en komposisie, rioolaanleg, leidekwerk en pandekking;

lakverniswerk, wat die volgende insluit: Polering met 'n kwas of kussinkie en bespuiting met enige komposisiestof;

skrynwerk, wat die volgende insluit: Die vervaardiging van alle skrynwerkartikels, ongeag of die artikel wat gebruik word deur die persoon wat dit gemaak of berei het in die gebou of bouwerk aangebring word of nie;

ruit-in-lood-werk, wat die volgende insluit: Die vervaardiging en/of die aanbring van ruite, reklametekens en die glaswerk wat daarmee in verband staan;

metaalwerk, wat die volgende insluit: Die aanbring van staalplafonne, metaalvensters, metaaldeure, siermetaalwerk, metaalrame, metaaltrappe en boumetaalwerk, die vervaardiging en/of aanbring van getrokke metaalwerk en plaat- en uitgedrukte metaal, ongeag of die artikel wat gebruik word deur die persoon wat dit gemaak of berei het in die gebou of bouwerk aangebring word of nie;

klipmesselwerk, wat die volgende insluit: Klipkap- en klipbouwerk (ook die kap van klippe vir en die bou van sierklipwerk), betonwerk en die aanbring of bou van voorafgegiete of kunsklip of kunsmarmer, plaveiwerk, mosaïekwerk, voegstryking, muur- en vloerbeteëling, die bediening van klippoleermasjinerie en die skerpmaak van klipmesselaarsgereedskap, ongeag of die artikel wat gebruik word deur die persoon wat dit gemaak of berei het in die gebou of bouwerk aangebring word of nie;

verfwerk, wat die volgende insluit: Versierwerk, muurplakwerk, glasuurwerk, distemperwerk, kleurkalkwerk, beitswerk, verniswerk, vlamskilderwerk, marmering en spuitverfwerk;

pleisterwerk, wat die volgende insluit: Boetseerwerk, granolitiese en komposisievloerwerk, komposisiemuurbedekking en die poleerwerk daaraan, voorafgegiete of kunsklipwerk, muur- en vloerbeteëling, plavei- en mosaïekwerk, ongeag of die artikel wat gebruik word deur die persoon wat dit gemaak of berei het in die gebou of bouwerk aangebring word of nie;

loodgieterswerk, wat die volgende insluit: Loodlaswerk, gasaanleg, sanitêre en huisingenieurswerk, rioolaanleg, kalfaatwerk, ventileerwerk, verwarming, die aanlê van warm en koue water, brandbestrydingsinstallasie en die vervaardiging en aanbring van alle plaatmetaalwerk, ongeag of die artikel wat gebruik word deur die persoon wat dit gemaak of berei het in die gebou of bouwerk aangebring word of nie;

uitrus van winkels, kantore en banke, wat die volgende insluit: Die vervaardiging en/of aanbring van winkelfronte, vensterskerms, vertoonkaste, toonbanke, skerms en los en vaste binnetoebehore;

staalwapening;

staalkonstruksie, wat die volgende insluit: Die aanbring van alle soorte staal- of ander metaalsuile, lêers, staalbalke of metaal in enige ander vorm wat deel uitmaak van 'n gebou of bouwerk;

houtwerk, wat die volgende insluit: Timmerwerk, houtwerk, houtmasjineerwerk, draaiwerk, houtsnywerk, die aanbring van golfyster, klank- en akoestiekmateriaal, kurk- en asbesisolasie, houtbelatting, komposisieplafonne en muurbedekking, die aanbring van proppe in mure, die bedekking van houtwerk met metaal, blok- en ander vloerwerk, met inbegryp van hout en kurk, ongeag of die artikel wat gebruik word deur die persoon wat dit gemaak of berei het, in die gebou of bouwerk aangebring word of nie;

„Raad" die Nywerheidsraad vir die Bounywerheid, Queenstown, wat geag word geregistreer te wees ingevolge artikel 19 van die Wet;

„plattelandse werk" alle werk binne die landdrosdistrik Queenstown, maar buite 'n straal van 12,9 km vanaf die Hoofposkantoor, Queenstown;

„noodsaaklike dienste" alle werk wat noodsaaklikerwyse verrig moet word om die gesondheid en veiligheid van die publiek te verseker of vir die voortsetting van 'n ander nywerheid, besigheid of onderneming;

„noodwerk" werk wat nie redelikerwyse gedurende die ure in klousule 10 (1) en (2) voorgeskryf, verrig kan word nie;

„ambagsman" 'n werknemer, uitgesonderd 'n vakleerling, leerling of kwekeling, wat enigeen van of al die werksaamhede verrig wat in die ambagte „asfaltwerk" tot „houtwerk" in die omskrywing van „Bounywerheid" gespesifiseer word, maar uitgesonderd daardie werksaamhede gespesifiseer in die omskrywing van „halfgeskoolde werknemer" en „ongeskoolde arbeider";

„leerling" 'n werknemer van 21 jaar of ouer wat kragtens 'n skriftelike leerlingskontrak dien wat ingevolge klousule 34 deur die Raad goedgekeur en geregistreer is;

Asphalting, which includes asphalting floors and roofing, laying malthoid or rubber flooring and waterproofing basements or foundations;

Bricklaying, which includes concreting and the fixing of concrete blocks, tiling of walls and floors, pointing, paving, mosaic work, facing work in slate, in marble and in composition, drainlaying, slating, and roof tiling;

french polishing, which includes polishing with a brush or pad and spraying with any composition;

joinery, which includes the manufacture of all articles of joinery, whether or not the fixing in the building or structure is done by the person making or preparing the articles used;

lead-light making, which includes the manufacture and/or fixing of lights, display signs and glazing relating thereto;

metal work, which includes the fixing of steel ceilings, metal windows, metal doors, builder's smithwork, metal frames and metal stairs and architectural metal work, the manufacture and/or fixing of drawn metal work and sheet and extruded metal, whether or not the fixing in the building or structure is done by the person making or preparing the article used;

masonry, which includes stone cutting and building (also the cutting and building of ornamental stonework), concreting and the fixing or building of precast or artificial stone or marble, paving, mosaic work, pointing, wall and floor tiling, operation of stone working machinery, and sharpening of mason's tools, whether or not the fixing in the building or structure is done by the person making or preparing the article used;

painting, which includes decorating, paper-hanging, glazing, distempering, colour washing, staining, varnishing, graining and marbling and spraying;

plastering, which includes modelling, granolithic and composition flooring, composition wall covering and polishing, precast or artificial stonework, wall and floor tiling, paving and mosaic work, whether or not the fixing in the building or structure is done by the person making or preparing the article used;

plumbing, which includes lead burning, gas fitting, sanitary and domestic engineering, drainlaying, caulking, ventilating, heating, hot and cold water fitting, fire installation and the manufacture and fitting of all sheet metal work whether or not the fixing in the building or structure is done by the person making or preparing the article used;

shop, office and bank fitting, which includes the manufacture and/or fixing of shop fronts, window enclosures, show cases, counters, screens and interior fittings and fixtures;

steel reinforcing;

steel construction, which includes the fixing of all classes of steel or other metal columns, girders, steel joists, or metal in any other form which form part of a building or structure;

woodworking, which includes carpentry, woodworking, machining, turning, carving, fixing of corrugated iron, sound and acoustic material, cork and asbestos insulation, woodlathing, composition ceiling and wall covering, plugging of walls, covering of woodwork with metal, block and other flooring, including wood and cork, whether or not the fixing in the building or structure is done by the person making or preparing the article used;

"Council" means the Industrial Council for the Building Industry, Queenstown, deemed to have been registered in terms of section 19 of the Act;

"country jobs" means all jobs within the Magisterial District of Queenstown, but outside a radius of 12,9 km from the General Post Office, Queenstown;

"essential services" means any work which must necessarily be performed in order to ensure the health and safety of the public or the carrying on of any other industry, business or undertaking;

"emergency work" means such work as cannot reasonably be performed during the hours prescribed in clause 10 (1) and (2);

"journeyman" means an employee, other than an apprentice, learner or trainee, who performs any or all of the operations specified in the trades "asphalting" to "woodworking" in the definition of "Building Industry", but excluding those operations specified in the definitions of "semi-skilled employee" and "unskilled labourer";

"learner" means an employee of the age of 21 years or over serving under a written contract of learnership approved and registered by the Council in terms of clause 34;

„halfgeskoolde werknemer" 'n werknemer wat een of meer van onderstaande klasse werk verrig, naamlik:

Dakke (bo en onder) verf, onder toesig van 'n ambagsman;

boustaalwerk verf;

afwitwerk en sementsmeerwerk verrig, uitgesonderd in dié mate waarvoor daar in die omskrywing van „ongeskoolde arbeider" voorsiening gemaak word;

lymwerk;

alle oppervlakke olie;

lakvernis en smeersel aan vloere aanwend;

die binnekant van geute verf;

trekkers bestuur;

toesig hou slegs oor ongeskoolde arbeiders;

metaalvensters aanmekaarsit;

vloerskuurmasjiene bedien;

geute maak en soldeer slegs in die werkwinkel;

glasuursproeispuite gebruik slegs in die werkwinkel;

kragsae, bandnasaagmasjiene, raamsae en dwarssae op onbewerkte hout bedien, met inbegrip van die nodige beweging van die keerblok, onder toesig van 'n ambagsman, maar uitgesonderd die verwydering, vervanging, skerpmaak, klop en/of stel van saaglemme;

die werk van 'n ketelbediener verrig;

klipwerk in tuine verrig;

voorafgegiete oppervlakkanale lê;

voorafgegiete betonblokke lê;

ongelaagde klipmuurwerk, uitgesonderd 'n gedeelte van 'n gebou of struktuur;

'n Mall en Biax- of soortgelyke tipe draagbare draaiskuurskyfmasjien, buigsame snymasjien, afwerkmasjien of ander masjienerie bedien;

Tyrolean- of soortgelyke masjien gebruik;

dakkappe met behulp van 'n setmaat of patroonplaat saag, aanmekaarsit en vasslaan; vooraf gesaagde daksparre, kaplatte, drabalke, latte, beplanking, latwerk, draers of klampe in vooraf gemerkte posisies vassit en vasspyker;

kurk of ander isoleermateriaal vassit;

vooraf vervaardigde bekisting van staal of hout in vooraf gemerkte posisies oprig;

saag en boor volgens 'n patroonplaat;

'n elektriese of ander tipe draagbare saag gebruik;

die massafabrikasie van betonbekistingspanele in setmate, uitgesonderd kolombekisting;

„seël" of „Vakansiefondsseël" die ampteliike seël in klousule 39 vermeld, wat deur die Raad uitgereik word;

„bouwerk" ook mure, keermure en monumente, maar nie grafstene en begraafplaasmonumente nie;

„geskikte slaapplek" 'n waterdigte skuiling wat veilig gesluit kan word, met houtvloer en die nodige was- en latrinegeriewe;

„ongeskoolde arbeider" 'n werknemer wat een of meer van die volgende werksaamhede verrig:

(a) Klippe of grond uitgrawe of uithaal vir fondamente, slote, riole en kanale;

(b) uitgegraafde klippe en grond verwyder;

(c) materiaal met skopgrawe invoer in of met skopgrawe uithaal uit dagha- of betonmengmasjiene, en dagha of beton met die hand met skopgrawe meng;

(d) goedere op- of aflaai;

(e) dagha, stene, klippe, beton of ander materiaal dra;

(f) gebruikte stene skoonkap;

(g) geboue en latrines wat deur Swartes gebruik word, afwit en teer of dergelike produkte daaraan smeer asook aan ruhoutwerk soos balke en onder aan vloere: Met dien verstande, egter, dat die afwit van gebouе en/of latrines gedurende die oprigting daarvan of binne 60 dae ná die voltooiing van 'n gebou, van hierdie woordomskrywing uitgesluit word;

(h) staalversterkingsmateriaal met draad bind of vasmaak, en sodanige materiaal onder toesig sny, buig en inmekaarsit, oprig en vassit;

(i) steiers onder toesig van 'n bevoegde persoon oprig;

(j) beton onder toesig gelykmaak;

(k) skroefdraad onder toesig van 'n ambagsman aan pype sny;

(l) betonmengers of dagha- of ander soortgelyke masjiene bedien;

(m) meganiese stortwaens bedien en dryf;

(n) ambagsmanne bystaan indien nodig, maar nie om geskoolde werk te verrig nie;

„loon" daardie gedeelte van die besoldiging wat ingevolge klousule 4 in die vorm van geld aan 'n werknemer betaalbaar is vir die gewone ure in klousule 10 voorgeskryf: Met dien verstande dat as 'n werkgewer 'n werknemer gereeld vir sodanige gewone werkure 'n groter bedrag betaal as dié in klousule 4 voorgeskryf, dit sodanige groter bedrag beteken;

„week" die tydperk van Maandag tot en met Vrydag;

"semi-skilled employee" means an employee engaged in all or any of the following classes of work, namely:

Applying paint to roofs (topside and underside) under the supervision of a journeyman;

painting of structural steel work;

limewashing and cement dressing, other than to the extent provided for in the definition of "unskilled labourer";

sizing;

oiling all surfaces;

applying floor lacquers and dressings;

painting inside of gutters;

driving tractors;

supervising solely unskilled labourers;

assembling metal windows;

operating floor sanding machines;

making of gutters and soldering in workshop only;

using glazing sprigg guns in workshop only;

operating power driven saws, band resaws, frame saws and cross cut saws on rough timber, including the moving of the fence as required, under the supervision of a journeyman, but excluding the removal, changing, sharpening, hammering and/or setting of saw blades;

performing the work of a boiler attendant;

performing stone work in gardens;

laying of precast surface channels;

laying of precast concrete slabs;

random stone walling other than part of a building or structure;

operating a Mall and Biax or similar type of portable spinner, flexible cutting, finishing or other machinery;

use of Tyrolean or similar machine;

cutting, assembling and nailing roof trusses using jig or template, the fixing and nailing of pre-cut rafters, purlins, bearers, battens, boarding, brandering, runners or cleats in pre-marked positions;

fixing cork or other insulating materials;

erecting steel or wood premade form work in premarked positions;

cutting and drilling to template;

using electric or other type portable saw;

mass fabrication of concrete form work panels in jigs, excluding column boxes;

"stamp" or "Holiday Fund Stamp" means the official stamp referred to in clause 39 and which is issued by the Council;

"structure" includes walls, retaining walls and monuments other than tombstones and burial monuments;

"suitable sleeping accommodation" means a waterproof shelter capable of being securely locked, with a wooden floor and the necessary washing and lavatory accommodation;

"unskilled labourer" means an employee engaged on any or all of the following:

(a) Digging or taking out stone or soil for foundations, trenches, drains and channels;

(b) removing excavated stone and soil;

(c) shovelling materials into or removing them from mortar or concrete mixing machines, and mixing mortar or concrete by hand with shovels;

(d) loading or unloading materials;

(e) carrying mortar, brick, stone, concrete or other materials;

(f) cleaning used bricks;

(g) lime washing and the use of tar or similar products on buildings and latrines occupied and used by Blacks and rough timber such as joist and underside of floors: Provided, however, that lime washing in connection with buildings and/or latrines during their erection or within 60 days of the completion of any building be excluded from this definition;

(h) binding or tying with wire steel reinforcing materials and cutting, bending and assembling, erecting, and fixing such materials under supervision;

(i) scaffold erecting and supervision of a competent person;

(j) levelling concrete under supervision;

(k) threading of piping under the supervision of a journeyman;

(l) operating concrete mixers or mortar or other similar machines;

(m) operating and driving mechanical dumpers;

(n) assisting journeymen wherever necessary, but not to perform skilled work;

"wage" means that portion of the remuneration payable in money to an employee in terms of clause 4, in respect of the ordinary hours laid down in clause 10: Provided that if an employer regularly pays an employee in respect of such ordinary hours of work an amount higher than that prescribed in clause 4, it means such higher amount;

"week" means from Monday to Friday inclusive;

IN LUMINE TUO VIDEBIMUS LUMEN
University of Fort Hare
Together in Excellence

„skuilplek teen reënweer" 'n skuilplek wat op so 'n manier van waterdigte materiaal gebou is dat die persone wat daarin skuil onder alle omstandighede droog gehou word en gemaklik is;

„werkende werkgewer of vennoot" 'n werkgewer of vennoot in 'n vennootskap wat in die Bounywerheid werk en wat self werk verrig soortgelyk aan dié wat enigeen van sy werknemers verrig.

4. Lone

(1) *(a)* Geen laer lone as die volgende, gelees met die orige bepalings van hierdie klousule, mag deur 'n werkgewer betaal of deur 'n werknemer aangeneem word nie:

Klas werknemer	Vanaf die datum waarop hierdie Ooreenkoms in werking tree tot 4.1.81	Vanaf 5.1.81 tot 30.6.81	Vanaf 1.7.81
	Per uur R	Per uur R	Per uur R
(i) Ongeskoolde arbeider...	0,40	0,43	0,46
(ii) Halfgeskoolde werknemer.....	0,80	0,83	0,86
(iii) Kraanbediener	0,90	0,94	0,98
(iv) Drywer van 'n motorvoertuig	0,90	0,94	0,98
(v) Hyserbediener.....	0,90	0,94	0,98
(vi) Ambagsman in die verfbedryf.....	1,51	1,56	1,62
(vii) Ambagsmanne in ander bedrywe.....	1,62	1,67½	1,74

(viii) Leerlinge—

gedurende die eerste jaar diens: 30 persent van ambagsmanskaal;

gedurende die tweede jaar diens: 45 persent van ambagsmanskaal;

gedurende die derde jaar diens: 65 persent van ambagsmanskaal.

Na voltooiing van 'n drie jaar lange leerlingskap kwalifiseer werknemers vir die loon van 'n ambagsman soos voorgeskryf in subparagrawe (vi) en (vii).

(b) By die indeling van 'n werknemer vir die doel van hierdie Ooreenkoms word hy geag in daardie klas te wees waarin hy uitsluitlik of hoofsaaklik werksaam is.

(2) Benewens die loon in subklousule (1) voorgeskryf, moet 'n werkgewer aan sy werknemer minstens 10 persent van sodanige loon betaal ten opsigte van elke uur of gedeelte van 'n uur waarin sodanige werknemer gevaarlike werk verrig.

Vir die toepassing van hierdie subklousule beteken „gevaarlike werk" alle werk wat—

(a) as gevaarlik geklassifiseer is in 'n statutêre, provinsiale of munisipale wet of regulasie wat betrekking het op die Bounywerheid en in werking is in enige dorp of plek waarin of waarby sodanige werk verrig word;

(b) aan die buitekant van 'n gebou, uitgesonderd by die oprigting van 'n nuwe gebou, op of van 'n hangsteier, hangstoel of 'n dak- of skuifleer, meer as 9 m bo die grond verrig word in verband met die opknapping, verbouing of herstel van sodanige gebou of die aanbring van ligte of die ophang van vlaggies;

(c) op 'n alleenstaande skoorsteen of 'n staalbundelskoorsteen meer as 9 m bo die grond verrig word;

(d) in ou vuilriole gedoen word.

(3) *Vermindering van loon.*—Niks in hierdie Ooreenkoms mag die uitwerking hê dat dit die besoldiging verminder wat aan 'n werknemer betaal word op die datum waarop hierdie Ooreenkoms in werking tree nie, en 'n werknemer wat op genoemde datum hoër besoldiging ontvang as dié wat vir sy klas werk in die Ooreenkoms voorgeskryf word, moet steeds sodanige hoër loon ontvang terwyl hy by dieselfde werkgewer vir dieselfde klas werk in diens is.

5. Betaling van Lone, Oortyd- en Ander Besoldiging

(1) Lone, oortydverdienste en alle ander verskuldigde besoldiging moet weekliks in kontant betaal word gedurende werkure en voor of om 17h00 op Vrydae, of by diensbeëindiging indien dit voor die gewone betaaldag van die werknemer plaasvind.

Betaling kan egter vóór Vrydag plaasvind indien die werkgewer en

"wet weather shelter" means a shelter constructed of weather proof materials in such manner that the occupants will be kept dry and comfortable in any circumstances;

"working employer or partner" means any employer or any partner in a partnership which carries out work in the Building Industry who himself performs work similar to that carried out by any of his employees.

4. Wages

(1) *(a)* No employer shall pay and no employee shall accept wages at rates lower than the following, read with the remaining provisions of this clause:

Category of employee	From the date of coming into operation of this Agreement up to 4.1.81	From 5.1.81 to 30.6.81	From 1.7.81
	Per hour R	Per hour R	Per hour R
(i) Unskilled labourer	0,40	0,43	0,46
(ii) Semi-skilled employee...	0,80	0,83	0,86
(iii) Operator of a crane	0,90	0,94	0,98
(iv) Motor vehicle driver	0,90	0,94	0,98
(v) Operator of hoist	0,90	0,94	0,98
(vi) Journeyman in the painting trade	1,51	1,56	1,62
(vii) Journeyman in other trades	1,62	1,67½	1,74

(viii) Learners—

for the first year of employment: 30 per cent of journeyman's rate;

for the second year of employment: 45 per cent of journeyman's rate;

for the third year of employment: 65 per cent of journeyman's rate.

On the completion of a three-year learnership, employees qualify for a journeyman's wage as prescribed in subparagraphs (vi) and (vii).

(b) In classifying an employee for the purpose of this Agreement he shall be deemed to be in that class in which he is wholly or mainly engaged.

(2) In addition to the wage prescribed in subclause (1) an employer shall pay to his employee not less than 10 per cent of such wage in respect of each hour or part of an hour during which such employee is engaged in performing dangerous work.

For the purposes of this subclause "dangerous work" means any work—

(a) classified as dangerous in any statutory, provincial or municipal law or regulation relating to the Building Industry and operative in any town or place in or at which such work is performed;

(b) performed on the outside of a building, other than in the course of erection of a new building, on or from a swinging scaffold, boatswain's chair, or a roof or extension ladder, at a height of more than 9 m from ground level, in connection with the renovation, alteration or repair of such building or the erection of illuminations or the hanging of bunting;

(c) performed on an independent chimney or steel stack at a height of more than 9 m from the ground level;

(d) performed in old sewers.

(3) *Reduction in wages*—Nothing in this Agreement shall operate to reduce the remuneration which is being paid to an employee on the date on which this Agreement comes into operation and any employee who, on the said date, is in receipt of remuneration in excess of that prescribed for his class of work in the Agreement shall continue to receive such higher rate whilst employed by the same employer on the same class of work.

5. Payment of Wages, Overtime and Other Remuneration

(1) Wages, earnings for overtime and all other remuneration due shall be paid in cash, weekly during working hours and not later than 17h00 on Fridays, or on termination of employment if this takes place before the ordinary pay-day of the employee.

Payments may, however, be made on days prior to Friday if agreed

University of Fort Hare
Together in Excellence

die werknemer daaroor ooreenkom. Indien Vrydag 'n openbare vakansiedag in die Bounywerheid is, moet betaling op die voorafgaande Donderdag plaasvind.

(2) Lone, oortydverdienste, toelaes en alle ander besoldiging wat aan 'n werknemer verskuldig is, moet in 'n verseëlde koevert of houer wees waarop die volgende aangeteken moet wees of wat vergesel moet gaan van 'n staat wat die volgende toon:

(a) Die werkgewer se naam;
(b) die werknemer se naam en beroep;
(c) die getal gewone werkure deur die werknemer gewerk;
(d) die getal oortydure deur die werknemer gewerk;
(e) die werknemer se loon;
(f) die besonderhede van enige ander besoldiging wat uit die werknemer se diens voortspruit;
(g) die besonderhede van enige aftrekkings wat gemaak is;
(h) die werklike bedrag wat aan die werknemer uitbetaal is; en
(i) die tydperk ten opsigte waarvan die betaling gemaak word.

(3) 'n Werkgewer mag sy werknemer geen boetes oplê of enige bedrae van sy werknemer se besoldiging aftrek nie, behalwe die volgende:

(a) Aftrekkings in klousules 21 (1) en (4), 25 en 37 bedoel;
(b) aftrekkings in klousule 29 bedoel;
(c) enige bedrag wat 'n werkgewer regtens of kragtens of ingevolge 'n bevel van 'n bevoegde hof mag of moet aftrek.

6. Stukwerk, Taakwerk en Aansporingswerk

(1) Dit is verbode dat werkgewers werk op 'n stukwerk- of taakwerkgrondslag uitbestee en dat werknemers sulke werk verrig.

(2) Behoudens die voorwaarde dat geen werknemer minder betaal mag word as die bedrag waarop hy ingevolge klousule 4 geregtig sou wees nie, kan 'n werkgewer 'n werknemer se besoldiging baseer op die hoeveelheid werk verrig of produksie gelewer: Met dien verstande dat geen sodanige besoldigingstelsel toelaatbaar is nie behalwe in die vorm van 'n aansporingskema oor die voorwaardes waarvan daar ooreengekom is soos uiteengesit in subklousules (3) en (4): Voorts met dien verstande dat vakleerlinge nie toegelaat mag word om aan sodanige aansporingskemas deel te neem nie.

(3) 'n Werkgewer wat 'n aansporingskema wil invoer, moet 'n gesamentlike komitee van verteenwoordigers van die bestuur en die werknemers instel wat, na raadpleging met enigeen van die vakverenigings wat partye by hierdie Ooreenkoms is en wie se lede daarby betrokke is, oor die bepalings van sodanige skema kan ooreenkom.

(4) Die bepalings van enige sodanige aansporingskema en enige latere wysigings daarvan waaroor die komitee mag besluit het, moet op skrif gestel en deur die lede van die komitee onderteken word en mag nie deur die komitee verander of deur enigeen van die partye beëindig word nie, tensy die party wat die Ooreenkoms wil verander of beëindig die ander party skriftelik dié kennis gegee het waaroor die partye ooreengekom het toe sodanige Ooreenkoms aangegaan is.

7. Staptyd- en Vervoertoelaes

(1) Indien 'n werkplek meer as 4,8 km maar hoogstens 12,9 km vanaf die Hoofposkantoor, Queenstown, geleë is, moet die werkgewer die werknemer wat na daardie werkplek gestuur word 'n toelae van 'n kwartier se loon betaal vir elke 1,6 km of gedeelte daarvan wat meer as die 4,8 km is.

(2) Die toelae is daagliks slegs vir een rigting betaalbaar.

(3) Die werkgewer is geregtig om vervoer in plaas van bogenoemde te verskaf, of om vervoer ten opsigte van genoemde afstand in albei rigtings te betaal.

(4) Die tyd wat 'n werknemer neem om na of van die werkplek te gaan, moet buite die gewone werkure wees wat in klousule 10 voorgeskryf word.

(5) 'n Werknemer wat op 'n staptyd- of vervoertoelae geregtig is, moet weekliks daardie toelae eis en ontvang.

(6) Vir die toepassing van hierdie klousule beteken „werkplek" die werkwinkel of terrein waar die werk verrig word.

8. Slegs-Arbeid-Kontrak

Geen werkgewer mag werk op 'n slegs-arbeid-kontrakgrondslag uitbestee nie. Geen werknemer mag werk op so 'n grondslag aanvaar of verrig nie.

9. Werk op die Platteland

Die volgende vervoertoelaes en/of slaapplektoelaes moet deur 'n werkgewer betaal word aan 'n werknemer wat deur hom na 'n plattelandse werkplek gestuur word:

(a) Indien 'n werknemer daagliks huis toe kan gaan en dit ook doen: Daagliks 'n tweedeklasretoerspoorwegkaartjie. Daar word betaal slegs vir tyd wat by die werkplek gewerk word;
(b) indien 'n werknemer nie daagliks huis toe kan gaan nie—
(i) 'n tweedeklasspoorwegkaartjie of soortgelyke vervoer na en

to by the employer and employee. When Friday is a holiday in the Building Industry, payment shall be made on the Thursday preceding.

(2) Wages, earnings for overtime, allowances and all other remuneration due to an employee shall be contained in a sealed envelope or container, on which shall be recorded, or which shall be accompanied by a statement showing:

(a) The employer's name;
(b) the employee's name and occupation;
(c) the number of ordinary hours worked by the employee;
(d) the number of overtime hours worked by the employee;
(e) the employee's wage;
(f) the details of any other remuneration arising out of the employee's employment;
(g) the details of any deductions made;
(h) the actual amount paid to the employee; and
(i) the period in respect of which payment is made.

(3) An employer shall not levy any fines against his employee nor shall he make any deductions from his employee's remuneration other than the following:

(a) Deductions referred to in clauses 21 (1) and (4), 25 and 37;
(b) deductions referred to in clause 29;
(c) a deduction of any amount which an employer is legally or by order of any competent court required or permitted to make.

6. Piece-Work, Task-Work and Incentive Work

(1) The giving out by employers, or the performance by employees of work on a piece-work or task-work basis is prohibited.

(2) Subject to the condition that no employee may be paid less than the amount he would be entitled to in terms of clause 4, an employer may base an employee's remuneration on the quantity or output of work done: Provided that no such system of remuneration shall be permissible except in the form of an incentive scheme the terms of which have been agreed upon as set out in subclauses (3) and (4): Provided further that apprentices shall not be allowed to participate in such incentive schemes.

(3) Any employer who wishes to introduce an incentive scheme shall set up a joint committee of representatives of the management and the employees which, after consultation with any of the trade union parties to this Agreement whose members are involved, may agree upon the terms of any such scheme.

(4) The terms of any such incentive scheme and any subsequent alteration thereto which may have been agreed upon by the committee shall be reduced to writing and be signed by the members of the committee and shall not be varied by the committee or terminated by either party unless the party wishing to vary or terminate the Agreement has, in writing, given the other party such notice as may be agreed upon by the parties when entering into such an Agreement.

7. Walking Time and Transport

(1) Whenever a job is situated more than 4,8 km and not more than 12,9 km from the General Post Office, Queenstown, the employer shall pay to an employee sent to work on such a job an allowance of one quarter of an hour's wage for every 1,6 km or part thereof of the distance beyond such 4,8 km.

(2) The allowance shall be payable for one way only daily.

(3) An employer shall be entitled to provide suitable transport in lieu of the foregoing, or pay transport, both ways, in respect of the said distance.

(4) Any time occupied by an employee in proceeding to or from work shall be outside the ordinary hours of work prescribed in clause 10.

(5) An employee entitled to walking time or transport allowance shall claim and be paid such allowance weekly.

(6) For the purposes of this clause, "job" means the workshop or site where work is being performed.

8. Labour Only Contract

No employer shall give out work on a labour only contract basis. No employee shall accept or perform work on such a basis.

9. Country Jobs

The following transport allowance and/or allowances for sleeping accommodation shall be paid by an employer to an employee sent by him to work on a country job:

(a) Where an employee is able and does return to his home every day: Return second class railway fare daily. Only time worked on a job shall be paid for;
(b) where an employee is unable to return to his home daily—
(i) second class railway fare or equivalent transport to and from

van die werkplek af aan die begin en aan die einde van die werk; vir tyd wat slegs gedurende gewone werkure gereis word, word betaal teen die uurkoonskaal van die betrokke werknemer in klousule 4 voorgeskryf;

(ii) geskikte slaapplek naby aan die werkplek en 'n toelae van R1,25 per dag of R1,75 per dag waar geen slaapplek verskaf word nie.

10. Werkure

(1) *(a)* Die gewone werkure is hoogstens—

(i) 42 uur per week in die geval van ongeskoolde arbeiders;

(ii) 41 uur per week in die geval van alle ander werknemers.

(b) Behoudens klousule 11 van hierdie Ooreenkoms, mag 'n werkgewer nie van 'n werknemer vereis of hom toelaat om buite die volgende ure te werk nie en mag 'n werknemer nie buite sodanige ure werk nie:

(i) in die geval van ongeskoolde arbeiders:
Maandae tot Vrydae: 07h45 tot 12h45, 13h45 tot 17h09; en

(ii) in die geval van alle ander werknemers:
Maandae tot Vrydae: 07h45 tot 12h45, 13h45 tot 16h57:

Met dien verstande dat as 'n werkgewer vind dat dit nie vir sy werknemers moontlik is om volgens hierdie ure te werk nie, hy ongeskoolde arbeiders kan laat werk vir dieselfde ure as dié wat vir alle ander werknemers voorgeskryf word.

(2) Terwyl hy by 'n werkgewer in diens is, mag geen werknemer enige werk in hierdie Ooreenkoms omskryf, buite die Bounywerheid, hetsy vir besoldiging of nie, buite die ure in hierdie klousule geskryf, en ook nie op Saterdae, Sondae, Goeie Vrydag, Paasmaandag, Hemelvaartsdag, Republiekdag, Geloftedag, Kersdag of Nuwejaarsdag of gedurende die jaarlikse verloftydperk, hetsy vir eie rekening of namens 'n ander persoon of persone, werf, onderneem of verrig nie, behalwe dat 'n werknemer slegs vir homself mag werk.

(3) Geen werk behalwe dié in klousule 11 (1) gespesifiseer, mag op Saterdae, Sondae, Paasmaandag, Goeie Vrydag, Hemelvaartsdag, Republiekdag, Geloftedag, Kersdag en Nuwejaarsdag gedoen word nie, behalwe dat 'n werknemer slegs vir homself mag werk.

11. Oortydwerk, Besoldiging vir Oortydwerk en Werk op Sekere Dae

(1) 'n Werkgewer mag nie van sy werknemer vereis of hom toelaat om oortyd te werk nie, behalwe in die geval van noodsaaklike dienste of in die geval van noodwerk. By die toepassing van hierdie Ooreenkoms word alle tyd wat gewerk word bo en behalwe die getal gewone werkure in klousule 10 voorgeskryf, geag oortydwerk te wees.

(2) *Besoldiging vir oortydwerk.*—Alle werknemers van wie daar vereis word om te werk buite die ure in klousule 10 voorgeskryf, moet soos volg betaal word:

(a) Ten opsigte van elke uur of gedeelte van 'n uur tot twee uur oortyd wat daagliks van Maandag tot en met Vrydag gewerk word:

(i) Vakleerlinge, leerlinge en kwekelinge: Een en 'n tiende maal hul uurloon;

(ii) alle ander werknemers: Die uurloon plus die Vakansiefondsbetaling in klousule 19 (3) *(a)* vir die betrokke klas werknemer voorgeskryf;

(b) ten opsigte van elke uur of gedeelte van 'n uur oortyd—

(i) wat langer as twee uur daagliks van Maandag tot en met Vrydag gewerk word, en

(ii) wat op Saterdag vóór die middaguur gewerk word: Een en 'n kwart maal sy uurloon;

(c) ten opsigte van elke uur of gedeelte van 'n uur oortyd—

(i) ná middag op Saterdae gewerk;

(ii) op Sondag tot 07h30 op Maandag gewerk:

(iii) op die openbare vakansiedae gewerk wat in klousule 10 (3) voorgeskryf word;

(iv) gedurende die jaarlikse verloftydperk gewerk wat in klousule 18 voorgeskryf word, tensy anders vermeld in die vrystellingsertifikaat: Een en 'n derde maal die uurloon van die betrokke werknemer.

(3) 'n Werkgewer mag sy werknemer hoogstens 10 uur oortydwerk in 'n week toelaat en 'n werknemer mag hoogstens 10 uur oortydwerk in 'n bepaalde week verrig.

12. Diensbeëindiging

(1) 'n Werknemer wat sy diens by 'n werkgewer wil beëindig en 'n werkgewer wat die dienste van sy werknemer wil beëindig, moet minstens een uur kennis gee: Met dien verstande dat dit nie inbreuk maak op die reg van 'n werkgewer of werknemer om die dienskontrak weens 'n oorsaak wat regtens as voldoende erken word sonder kennisgewing te beëindig nie.

(2) 'n Werkgewer kan aan 'n werknemer een uur se loon gee in plaas

the place of work at the beginning and termination of such work; time occupied in travelling during the ordinary working hours only shall be paid for at the hourly rate of wage of the employee concerned, as prescribed in clause 4;

(ii) suitable sleeping accommodation in proximity to the place of work and an allowance of R1,25 per day or R1,75 per day where no sleeping accommodation is provided.

10. Hours of Work

(1) *(a)* The ordinary hours of work shall not exceed—

(i) in the case of an unskilled labourer: 42 hours per week;

(ii) in the case of all other employees: 41 hours per week.

(b) Subject to the provisions of clause 11 of this Agreement, an employer shall not require or permit an employee and an employee shall not work outside the hours set out hereunder:

(i) In the case of unskilled labourers:
Mondays to Fridays 07h45 to 12h45, 13h45 to 17h09; and

(ii) in the case of all other employees:
Mondays to Fridays 07h45 to 12h45, 13h45 to 16h57:

Provided that should an employer find it not practicable for his employees to adhere to these hours, he may work unskilled labourers for the same hours as laid down for all other employees.

(2) No employee whilst in the employ of an employer shall solicit, undertake or perform any work described in this Agreement outside of the Building Industry, whether for remuneration or not, outside the hours prescribed in this clause, nor on Saturdays, Sundays, Good Friday, Easter Monday, Ascension Day, Republic Day, Day of the Covenant, Christmas Day or New Year's Day or during the annual leave period, either on his own account or on behalf of any other person or persons, save that an employee may perform work for himself only.

(3) No work other than that specified in clause 11 (1) shall be performed on Saturdays, Sundays, Easter Monday, Good Friday, Ascension Day, Republic Day, Day of the Covenant, Christmas Day and New Year's Day, save that an employee may perform work for himself only.

11. Overtime, Payment for Overtime and Work on Certain Days

(1) An employer shall not require or allow an employee to work overtime except on essential services or in cases of emergency work. For the purposes of this Agreement all time worked in excess of the number of ordinary hours of work prescribed in clause 10 shall be deemed to be overtime.

(2) *Payment for overtime.*—Any employee who is required to work any time outside the hours of work prescribed in clause 10 shall be paid—

(a) in respect of each hour or part of an hour overtime up to two hours worked daily between Monday and Friday inclusive:

(i) Apprentices, learners and trainees: One and one tenth times his hourly wage;

(ii) all other employees: The hourly wage plus the Holiday Fund payment prescribed for the class of employee concerned in clause 19 (3) *(a)*;

(b) in respect of each hour or part of an hour overtime worked—

(i) in excess of two hours daily between Monday and Friday, inclusive, and

(ii) on Saturday prior to noon: One and one quarter times his hourly wage;

(c) in respect of each hour or part of an hour overtime worked—

(i) after noon on Saturdays;

(ii) on Sunday until 07h30 on Monday;

(iii) on the public holidays prescribed in clause 10 (3);

(iv) during the annual leave period prescribed in clause 18, unless otherwise stated in the certificate of exemption: One and one third times the hourly wage of the employee concerned.

(3) No employer shall permit his employee to work and no employee shall work more than 10 hours overtime in any one week.

12. Termination of Employment

(1) An employee desirous of terminating his employment with an employer and an employer desirous of terminating the services of his employee shall give not less than one hour's notice: Provided that this shall not affect the right of an employer or employee to terminate the contract of employment without notice for any cause recognised by law as sufficient.

(2) An employer may give an employee one hour's pay in lieu of the

University of Fort Hare
Excellence

van die kennisgewing waarop sodanige werknemer kragtens subklousule (1) geregtig is, en 'n werknemer kan 'n werkgewer eweneens een uur se loon gee in plaas van die kennisgewing waarop sodanige werkgewer geregtig is.

13. Skuilplek Tydens Reënweer

Op enige terrein waar bouwerksaamhede verrig word, moet werkgewers 'n behoorlike skuilplek verskaf waar werknemers gedurende reënweer kan skuil.

14. Latrines

Alle werkgewers moet by alle werkplekke behoorlike afsonderlike sanitêre geriewe vir Blanke en Nie-Blanke werkers verskaf.

15. Teepouse

Elke werkgewer moet gedurende die oggendskof 'n teepouse van 10 minute aan sy werknemers toestaan.

16. Werkende Werkgewer of Vennoot

Alle werkende werkgewers en/of vennote of hul regstreekse verteenwoordigers moet die werkure nakom wat in klousule 10 voorgeskryf word.

17. Kennisgewingbord

Elke werkgewer en alle werkgewers wat in vennootskap werk, moet, waar werk in die Bouwerheid ook al deur hom of hulle uitgevoer word, op 'n opvallende plek wat vir die publiek toeganklik is, 'n kennisgewingbord van minstens 60 cm by 45 cm vertoon, waarop die naam en besigheidsadres van sodanige werkgewer of vennootskap vermeld word. Hierdie klousule is slegs van toepassing op werk wat sewe dae of langer duur.

18. Jaarlikse Verlof

Tensy die toestemming van die Raad vooraf skriftelik verkry word, mag geen werkgewer in die Nywerheid gedurende die volgende tydperke werk onderneem of van 'n werknemer vereis of hom toelaat om werk te verrig nie en mag geen werknemer in die Nywerheid werk onderneem of verrig nie:

Tussen 17h00 op 12 Desember 1980 en 07h48 op 5 Januarie 1981.

19. Besoldiging ten opsigte van Jaarlikse Verlof en Openbare Vakansiedae

(1) *(a)* Geloftedag, Kersdag en Nuwejaarsdag is verpligte vakansiedae met besoldiging vir alle werknemers vir wie lone in klousule 4 van hierdie Ooreenkoms voorgeskryf word, en betaling moet geskied op die wyse en volgens die lone in die verdere bepalings van hierdie klousule voorgeskryf: Met dien verstande dat vakleerlinge en leerlinge betaal moet word asof hulle werklik die gewone werkure op dié dae gewerk het.

(b) Goeie Vrydag, Paasmaandag, Hemelvaartsdag en Republiekdag is verpligte vakansiedae met besoldiging vir alle werknemers en betaling moet geskied op die eerste betaaldag ná sodanige vakansiedag: Met dien verstande dat—

(i) as 'n verpligte vakansiedag met besoldiging soos in paragraaf *(b)* bedoel op 'n Saterdag val, 'n werknemer nie op betaling vir daardie dag geregtig is nie: Met dien verstande dat, as Republiekdag op dieselfde dag val as een van die ander verpligte vakansiedae met besoldiging soos in paragraaf *(b)* bedoel, 'n werknemer besoldig moet word teen minstens sy gewone loonskaal asof hy op dié dag sy gewone werkure gewerk het;

(ii) indien 'n werknemer van sy werk afwesig is op die werkdag onmiddellik voor en/of ná die verpligte vakansiedae in paragraaf *(b)* bedoel, hy nie geregtig is op die betaling in hierdie paragraaf bedoel nie: Voorts met dien verstande dat hierdie voorbehoudsbepaling nie van toepassing is ten opsigte van 'n werknemer wat in opdrag of op versoek van sy werkgewer van sy werk afwesig is nie;

(iii) geen werkgewer 'n werknemer voor enige verpligte vakansiedag met besoldiging in paragraaf *(b)* bedoel, mag afbetaal ten einde hierdie subklousule te omseil nie.

(c) Ingeval 'n verpligte vakansiedag met besoldiging in hierdie subklousule bedoel op 'n Sondag val, moet die daaropvolgende Maandag as die vakansiedag met besoldiging beskou word.

(3) Benewens die besoldiging wat ingevolge klousule 4 van hierdie Ooreenkoms betaalbaar is, moet elke werkgewer—

(a) aan elkeen van ondergenoemde werknemers in sy diens, vir die gewone tyd wat elke sodanige werknemer in sy diens gewerk het

notice to which such employee may be entitled in terms of subclause (1) and an employee may similarly give an employer one hour's pay in lieu of the notice to which such employer is entitled.

13. Wet Weather Shelter

At any site where building operations are being conducted, employers shall provide suitable accommodation in which employees may take shelter during wet weather.

14. Latrines

Proper sanitary accommodation shall be provided by all employers on all jobs for White and Non-White workers separately.

15. Tea Interval

A tea interval of 10 minutes shall be allowed by every employer to his employees during the morning shift.

16. Working Employer or Partner

Every working employer and/or partner or his direct representative shall observe the working hours prescribed in clause 10.

17. Notice Board

Every employer and all employers working in partnership shall, wherever operations in the Building Industry are being carried out by him or them, display in a conspicuous place accessible to the public, a notice board of a size not less than 60 cm by 45 cm showing the name and business address of such employer or partnership.

This clause shall only apply to jobs of seven days' duration and longer.

18. Annual Leave

Unless the consent of the Council has first been obtained, in writing, no employer shall perform or require or allow an employee to perform work and no employee shall undertake or perform work in the Industry during the periods:

Between 17h00 on 12 December 1980 and 07h48 on 5 January 1981.

19. Payment in respect of Annual Leave and Public Holidays

(1) *(a)* Day of the Covenant, Christmas Day and New Year's Day shall be compulsory paid holidays for all employees for whom wages are prescribed in clause 4 of this Agreement and payment shall be made in the manner provided for and at the rates prescribed in the further provisions of this clause: Provided that apprentices and learners shall be paid as though they had, in fact, worked the ordinary hours of work on those days.

(b) Good Friday, Easter Monday, Ascension Day and Republic Day shall be compulsory paid holidays for all employees and payment shall be made on the first pay-day following such holiday: Provided that—

(i) when a compulsory paid holiday referred to in paragraph *(b)* falls on a Saturday an employee shall not be entitled to any payment for that day: Provided that, when Republic Day falls on the same day as any of the other compulsory paid holidays referred to in paragraph *(b)*, an employee shall be paid at not less than his ordinary rate of wage as if he had on such day worked the ordinary hours of work;

(ii) if an employee is absent from work on the working day immediately prior to and/or following the compulsory paid holidays referred to in paragraph *(b)* he shall not be entitled to the payment referred to in this paragraph: Provided further that this proviso shall not apply in respect of an employee who is absent from work on the instructions or at the request of his employer;

(iii) no employer shall retrench any employees immediately prior to any compulsory paid holidays referred to in paragraph *(b)* for the purpose of evading the provisions of this subclause.

(c) In the event of a compulsory paid holiday referred to in this subclause falling on a Sunday, the Monday following shall be observed as a paid holiday.

(3) In addition to the remuneration payable in terms of clause 4 of this Agreement, every employer shall pay to—

(a) each of the undermentioned employees in his employ in respect of the ordinary time worked by each such employee in his employ the following Holiday Fund allowance, which allowance

Together in Excellence

die volgende Vakansiefondstoelae betaal, en sodanige toelae moet betaling vir Geloftedag, Kersdag en Nuwejaarsdag insluit:

Klas werknemer	Vanaf die datum waarop hierdie Ooreenkoms in werking tree tot 31.10.80	Vanaf 3.11.80
	Per uur c	Per uur c
(i) Ongeskoolde arbeider	3	3
(ii) Halfgeskoolde werknemer	6	6
(iii) Kraanbediener	7	7
(iv) Drywer van 'n motorvoertuig	7	7
(v) Hyserbediener	7	7
(vi) Ambagsman in die verfbedryf	11½	12
(vii) Ambagsman in ander bedrywe	12	12½

(b) *Vakleerlinge en leerlinge.*—Elke werknemer moet aan elke vakleerling en leerling in sy diens op die laaste betaaldag voor die aanvang van die verloftydperk in klousule 18 bedoel die loon betaal wat daardie vakleerling of leerling sou verdien het as hy gedurende genoemde verloftydperk vir sy werkgewer bly werk het: Met dien verstande dat in die geval van 'n vakleerling of leerling wie se dienskontrak beëindig word voor die laaste dag wat die aanvang van die verloftydperk in klousule 18 bedoel, voorafgaan, die werkgewer aan sodanige vakleerling of leerling 'n bedrag gelyk aan een vyfde van sy weekloon moet betaal ten opsigte van elke voltooide maand diens gedurende die tydperk sedert hy laas op verlof geregtig geword het.

20. Voortsetting en Administrasie van Vakansiefonds

(1) Die Fonds ingestel by Goewermentskennisgewing 1984 van 30 September 1955, wat bekend staan as die „Vakansiefonds vir die Bounywerheid, Queenstown" (hierna die „Fonds" genoem), word hierby voortgesit.

(2) Die Fonds bestaan uit geld wat aan hom toeval uit die verkoop van seëls soos in klousule 21 bepaal. Alle geld ontvang, moet binne twee dae na ontvangs daarvan in 'n bank in die kredit van die Fonds inbetaal word, of indien daar 'n bankvakansiedag tussenin kom, so spoedig moontlik daarna.

(3) Alle geld wat aan die Fonds behoort, kan na goeddunke van die Raad van tyd tot tyd in Staatseffekte of op vaste deposito of onmiddellik opeisbaar in 'n bank of bougenootskap belê word en alle rente op sodanige beleggings val aan die algemene fondse van die Raad toe.

(4) Alle geld ontvang uit die verkoop van Vakansiefondsboekies wat deur die Raad verskaf word, val aan die algemene fondse van die Raad toe as vergoeding vir die administrasie van die Fonds.

(5) Alle trekkings op die Vakansiefonds se bankrekening of beleggings moet per tjek of dokument geskied wat geteken moet word deur die sekretaris en/of tesourier en sodanige ander persoon of persone as wat die Raad aanstel.

(6) Die Raad kan die reëls opstel wat hy nodig ag met betrekking tot die behoorlike werking en die administrasie van die Fonds vir sover dit nie onbestaanbaar met hierdie klousule is nie.

(7) Die Raad moet 'n sekretaris en/of tesourier aanstel wat bekend sal staan as die sekretaris en/of tesourier van die Fonds, en enige ander personeel wat hy nodig ag vir die behoorlike administrasie van die Fonds. Die salarisse van sodanige amptenare en alle ander uitgawes moet uit die algemene fondse van die Raad betaal word.

(8) Een of meer ouditeurs wat deur die Raad aangestel moet word, moet die rekenings van die Fonds jaarliks ouditeer en voor of op 30 Junie 'n staat opstel wat die volgende toon:

(a) Alle geld ontvang; en

(b) uitgawes onder alle hoofde aangegaan gedurende die 12 maande wat op die vorige 30 Junie geëindig het, saam met 'n staat wat die Fonds se bates en laste toon.

Ware afskrifte van hierdie state wat deur die Voorsitter van die Raad medeonderteken moet word en die ouditeur se verslag daaroor moet op die Raad se kantoor ter insae lê. Sertifikate van sowel die state as die ouditeur se verslag daaroor moet so spoedig moontlik daarna, maar voor of op 30 September elke jaar by die Nywerheidsregistrateur ingedien word.

21. Vakansiefonds

(1) Elke werkgewer moet, op elke betaaldag, die bedrae hieronder genoem, aftrek van die besoldiging wat elke week verskuldig is aan elke

shall include payment in respect of Day of the Covenant, Christmas Day and New Year's Day:

Category of employee	From the date of coming into operation of this Agreement up to 31.10.80	From 3.11.80
	Per hour c	Per hour c
(i) Unskilled labourer	3	3
(ii) Semi-skilled employee	6	6
(iii) Operator of crane	7	7
(iv) Motor vehicle driver	7	7
(v) Operator of hoist	7	7
(vi) Journeyman in the painting trade	11½	12
(vii) Journeyman in other trades	12	12½

(b) *Apprentices and learners.*—Every employer shall pay to every apprentice and learner in his employ on the last day prior to the commencement of the leave period referred to in clause 18, the wages which such apprentice or learner would have earned if he had continued to work for his employer during the said leave period: Provided that in the case of an apprentice or learner whose contract of employment is terminated prior to the last day preceding the commencement of the leave period referred to in clause 18, the employer shall pay to such apprentice or learner an amount equal to one fifth of his weekly wage in respect of each completed month of service during the period since he last qualified for leave.

20. Continuation and Administration of Holiday Fund

(1) The Fund established under Government Notice 1984 of 30 September 1955, and known as the "Queenstown Holiday Fund for the Building Industry" (hereinafter referred to as the "Fund") is hereby continued.

(2) The Fund shall consist of moneys accruing from the sale of stamps as provided for in clause 21. All moneys received shall be deposited in a bank to the credit of the Fund within two days after receipt thereof, or should a bank holiday intervene, as soon as possible thereafter.

(3) Any moneys belonging to the Fund may be invested from time to time in Government securities, or on fixed deposit or on call with a bank or building society, in the discretion of the Council and any interest accruing from such investments shall accrue to the general funds of the Council.

(4) Any funds accruing from the sale of Holiday Fund books supplied by the Council shall accrue to the general funds of the Council in consideration of the administration of this Fund.

(5) All withdrawals from the Holiday Fund bank account or investments shall be made by cheque or document, signed by the secretary and/or treasurer and such other person or persons as the Council may appoint.

(6) The Council may make such rules as it deems necessary relevant to proper functioning of the Fund and the administration of the Fund in so far as it is not inconsistent with the provisions of this clause.

(7) The Council shall appoint a secretary and/or treasurer who shall be known as the secretary and/or treasurer of the Fund, and such other staff as may be necessary for the proper administration of the Fund. The salaries of such officials and all other expenses shall be paid from the general funds of the Council.

(8) An auditor or auditors to be appointed by the Council shall audit the accounts of the Fund annually and shall not later than 30 June prepare a statement showing—

(a) all moneys received; and

(b) expenditure incurred under all headings for the 12 months ended 30 June, preceding, together with a statement showing the assets and liabilities of the Fund.

True copies of these statements which shall be countersigned by the Chairman of the Council, and the auditor's report thereon shall be available for inspection at the Council's office. Certificates of both statements and the auditor's report thereon shall as soon as possible thereafter but not later than 30 September of each year be presented to the Industrial Registrar.

21. Holiday Fund

(1) Every employer shall, on each pay-day, deduct from the remuneration due every week to each member of the undermentioned classes of

lid van ondergenoemde klasse werknemers wat gedurende daardie week minstens agt uur vir hom gewerk het:

Klas werknemer	Vanaf die datum waarop hierdie Ooreenkoms in werking tree tot 31.10.80	Vanaf 3.11.80
	Waarde van seël per week R	*Waarde van seël per week* R
(a) Ongeskoolde arbeider	1,26	1,26
(b) Halfgeskoolde werknemer	2,46	2,46
(c) Kraanbediener	2,87	2,87
(d) Drywer van 'n motorvoertuig	2,87	2,87
(e) Hyserbediener	2,87	2,87
(f) Ambagsman in die verfbedryf	4,72	4,92
(g) Ambagsman in ander bedrywe	4,92	5,13:

Met dien verstande dat indien 'n werknemer gedurende dieselfde week by twee of meer werkgewers in diens was, die aftrekking vir daardie week gemaak moet word deur die werkgewer wat hom gedurende daardie week eerste vir minstens agt uur in diens geneem het: Voorts met dien verstande dat geen aftrekkings gemaak moet word ten opsigte van 'n werknemer wat minder as agt uur in 'n bepaalde week gewerk het nie.

(2) Die werkgewer moet ten opsigte van die bedrae wat aldus kragtens subklousule (1) deur hom afgetrek is, op elke betaaldag aan elkeen van sy betrokke werknemers 'n seël ter waarde van sulke bedrae uitreik, deur hom met sy naam gerojeer en met die datum daarop aangebring, en elke werknemer moet sodanige seëls in sy bydraeboekie inplak wat hy moet hou.

(3) Die seëls in subklousule (2) bedoel, moet deur die werkgewer van die sekretaris van die Fonds gekoop word en 'n voldoende voorraad daarvan moet te alle tye deur die werkgewer gehou word: Met dien verstande dat 'n werkgewer 'n terugbetaling van die Fonds ter waarde van alle ongebruikte seëls kan vorder. Aansoek om sodanige terugbetaling moet geskied voor of op 'n datum wat deur die Raad vasgestel en waarvan kennis aan alle werkgewers gegee moet word.

(4) Aansoeke om 'n bydraeboekie ten opsigte van elkeen van sy betrokke werknemers moet deur die werkgewer gedoen word op 'n vorm wat jaarliks van die Raad verkry moet word. Die koste van 'n bydraeboekie is 7c vir 'n ongeskoolde arbeider en 15c vir alle ander werknemers. 'n Werkgewer moet die koste van elke bydraeboekie aan die sekretaris van die Raad betaal en hy is daarop geregtig om die bedrag wat aldus deur hom betaal is, ondanks enige ander bepalings van hierdie Ooreenkoms, van die loon van die betrokke werknemer af te trek.

(5) So spoedig moontlik ná die laaste betaaldag in Oktober elke jaar en nie later nie as 10 dae voor die aanvang van die verloftydperk in klousule 18 voorgeskryf, moet elke werknemer sy bydraeboekie by die sekretaris van die Fonds laat in ruil vir 'n bewyskaart, en die sekretaris moet die bedrag vasstel wat aan die werknemer verskuldig is soos blyk uit die waarde van die seëls wat in sy bydraeboekie geplak is en aan die werknemer die betrokke bedrag voor of op die dag vóór die aanvang van die verloftydperk betaal.

(6) Die Fonds is nie aanspreeklik vir uitbetaling ten opsigte van seëls wat ingevolge hierdie klousule aan 'n werknemer uitgereik is nie, tensy sulke seëls ooreenkomstig subklousule (2) in 'n bydraeboekie geplak is en nie later nie as 10 dae voor die aanvang van die verloftydperk by die sekretaris van die Fonds ingedien is: Met dien verstande dat die Raad die sekretaris van die Fonds kan magtig om betaling te doen aan 'n werknemer wat om 'n goeie rede wat deur die Raad bepaal word, nie sy bydraeboekie teen sodanige datum ingedien het nie.

(7) 'n Werknemer is nie daarop geregtig om vóór die dag onmiddellik voor die aanvang van die volgende verloftydperk betaling te eis vir seëls wat voor die laaste betaaldag in Oktober van enige jaar aan hom uitgereik is nie. Die Raad kan egter sodanige betaling magtig indien hy dit raadsaam ag. Ingeval van die dood van die werknemer moet die bedrag wat uit voornoemde Fonds aan hom verskuldig is, by oorhandiging van sy bydraeboekie aan die sekretaris van die Fonds per tjek aan sy boedel uitbetaal word.

(8) Hierby word voorsiening gemaak vir die uitreiking van 'n spesiale spaarseël ter waarde van 50c. Hierdie seël kan deur werkgewers namens hul werknemers of deur werknemers self van die Raad gekoop word. Die koop en aflossing van sodanige seëls is *mutatis mutandis* onderworpe aan die voorafgaande bepalings van hierdie klousule.

(9) Die bydraeboekies en seëls wat aan werknemers uitgereik word, is nie oordraagbaar nie en geen geld wat daarkragtens verskuldig is,

employees who has worked for him for not less than eight hours during that week, the amounts scheduled hereunder:

Category of employee	From the date of coming into operation of this Agreement up to 31.10.80	From 3.11.80
	Value of stamp per week R	*Value of stamp per week* R
(a) Unskilled labourer	1,26	1,26
(b) Semi-skilled employee	2,46	2,46
(c) Operator of a crane	2,87	2,87
(d) Motor vehicle driver	2,87	2,87
(e) Operator of hoist	2,87	2,87
(f) Journeyman in the painting trade	4,72	4,92
(g) Journeyman in other trades	4,92	5,13:

Provided that where an employee is employed by two or more employers during the same week, the deduction for that week shall be made by the employer by whom the employee was first employed during that week for more than eight hours: Provided further that no deductions shall be made in respect of an employee who has worked for less than eight hours in any one week.

(2) The employer shall in respect of the amounts so deducted by him in terms of subclause (1) issue on each pay-day to each of his employees concerned, a stamp, cancelled by him with his name and the date endorsed thereon, to the value of such amounts, and each employee shall affix such stamp in his contribution book which shall be retained by him.

(3) The stamps referred to in subclause (2) shall be purchased by the employer from the secretary of the Fund and an adequate supply hereof shall at all times be maintained by the employer: Provided that an employer may obtain a refund from the Fund of the value of any unused stamps. An application for such refund shall be made not later than a date to be fixed by the Council and notified to all employers.

(4) Applications for a contribution book in respect of each of his employees concerned shall be made by the employer on a form to be obtained from the Council annually. The cost of a contribution book shall be 7c in respect of an unskilled labourer and 15c in respect of any other employee. An employer shall pay the cost of each contribution book to the Secretary of the Council and shall be entitled to deduct the amount so paid by him from the wages of the employee concerned, notwithstanding any other provisions of this Agreement.

(5) As early as possible after the last pay-day in October in each year and not later than 10 days prior to the commencement of the leave period prescribed in clause 18, every employee shall deposit his contribution book with the secretary of the Fund in exchange for a receipt card and the secretary shall ascertain the amount due to the employee as reflected by the value of the stamps affixed to his contribution book, and pay to the employee the amount in question at a date not later than the day prior to the commencement of the leave period.

(6) The Fund shall not be liable to make payment in respect of any stamps issued to employees in terms of this clause unless such stamps are affixed in a contribution book in terms of subclause (2) and such contribution book is deposited with the secretary of the Fund not later than 10 days before the commencement of the leave period: Provided that the Council may authorise the secretary of the Fund to make payment to any employee who for some good reason determined by the Council has not lodged his contribution book by such date.

(7) An employee shall not be entitled to claim payment for any stamps issued to him prior to the last pay-day in October in any year, until the day immediately preceding the commencement of the following leave period. The Council, however, shall have the right to authorise such payment if, in its discretion, it is considered advisable to do so. In case of death of the employee the amount due to him from the aforesaid Fund shall be paid to his estate by cheque drawn in favour of such estate on his contribution book being lodged with the secretary of the Fund.

(8) Provision is hereby made for the issue of a special savings stamp to the value of 50c. This stamp may be purchased from the Council by employers on behalf of employees or by employees themselves. The purchase and redemption of such stamps shall be subject, *mutatis mutandis*, to the foregoing provisions of this clause.

(9) The contribution books and stamps issued to employees are not transferable and no moneys due in terms thereof can be ceded or

mag gesedeer of in pand gegee word nie. Seëls wat deur iemand verkry word behalwe ingevolge hierdie Ooreenkoms kan deur die Raad verbeurd verklaar word ten bate van die algemene fondse van die Raad.

(10) Onopgeëiste geld in die kredit van die Vakansiefonds aan die einde van elke jaar moet ten bate van die algemene fondse van die Raad oorgedra word indien dit nie voor of op 30 Junie die volgende jaar opgeëis word nie. Niks in hierdie subklousule word geag die Raad te verhinder om betaling te eniger tyd na 30 Junie elke volgende jaar te maak nie en die Raad is verplig om die meriete van alle eise om betaling na 30 Junie elke volgende jaar te oorweeg en daaroor te besluit.

(11) Ingeval hierdie Ooreenkoms deur verloop van tyd verstryk of weens 'n ander oorsaak beëindig word, moet die Raad die Fonds bly beheer totdat dit òf gelikwideer òf deur die Raad oorgedra is aan 'n ander fonds wat vir dieselfde doel ingestel is as dié waarvoor die oorspronklike Fonds ingestel is òf in 'n daaropvolgende ooreenkoms voortgesit word.

(12) Ingeval die Raad ontbind word of ingeval hy sy werksaamhede staak gedurende die tydperk waarin hierdie Ooreenkoms kragtens artikel 34 (2) van die Wet bindend is, kan die Nywerheidsregistrateur 'n komitee aanstel bestaande uit 'n gelyke getal werkgewer- en werknemerverteenwoordigers in die Nywerheid, en moet dié komitee die Fonds bly beheer. Vakatures wat in die komitee ontstaan, kan deur die Registrateur gevul word uit werkgewers of werknemers, na gelang van die geval, ten einde die ewewig tussen werkgewer- en werknemerverteenwoordigers in die komitee te verseker. Ingeval die komitee nie in staat is nie of onwillig is om sy werk te verrig, of ingeval 'n dooie punt ontstaan wat, na die mening van die Registrateur, die beheer van die Fonds ondoenlik of onwenslik maak, kan hy een of meer trustees aanstel om die werk van die komitee te verrig, wat vir dié doel al die bevoegdhede van die komitee besit. Indien daar by verstryking van hierdie Ooreenkoms geen Raad is nie, moet die Fonds deur die komitee wat ooreenkomstig hierdie subklousule funksioneer of, na gelang van die geval, deur die trustee of trustees gelikwideer word en indien die sake van die Raad by verstryking van die Ooreenkoms reeds gelikwideer en sy bates verdeel is, moet die balans van die Fonds verdeel word soos bepaal by artikel 34 (4) van die Wet, asof dit deel van die algemene fondse van die Raad uitmaak.

(13) By likwidasie van die Fonds ooreenkomstig subklousule (11), moet die geld wat in die kredit van die Fonds oorbly, ná betaling van alle eise teen die Fonds, met inbegrip van administrasie- en likwidasiekoste, aan die algemene fondse van die Raad betaal word.

22. Eerstehulp

Op alle persele waar werknemers by hom in diens is, moet elke werkgewer behoorlike uitrusting vir eerstehulp verskaf en dit in 'n goeie toestand hou.

23. Administrasie van Ooreenkoms

Die Raad is die liggaam wat verantwoordelik is vir die administrasie van hierdie Ooreenkoms en hy kan vir die leiding van die werkgewers en die werknemers menings uitspreek wat nie onbestaanbaar met die bepalings daarvan is nie.

24. Vrystellings

(1) Die Raad kan om afdoende redes aan 'n persoon of persone skriftelike vrystelling van enigeen van die bepalings van hierdie Ooreenkoms verleen.

(2) Die Raad moet ten opsige van 'n persoon aan wie vrystelling kragtens hierdie klousule verleen word, die voorwaardes stel waarop die vrystelling verleen word, asook die tydperk waarvoor die vrystelling van krag is: Met dien verstande dat die Raad na goeddunke en nadat kennis skriftelik aan die betrokke persoon of persone gegee is, 'n vrystellingsertifikaat kan intrek.

(3) 'n Vrystellingsertifikaat wat deur die Sekretaris van die Raad onderteken is, moet aan elke vrygestelde persoon uitgereik word. 'n Vrystellingsertifikaat is in geen ander gebied as dié waarvoor dit uitgereik is, geldig nie.

(4) 'n Vrystellingsertifikaat kan gedurende die tydperk waarvoor dit uitgereik is, te eniger tyd deur die Raad, sonder opgawe van redes, gewysig of ingetrek word.

(5) 'n Werkgewer moet die gewysigde voorwaardes nakom soos vasgestel deur 'n vrystellingsertifikaat wat ooreenkomstig hierdie klousule uitgereik is.

25. Algemene Fonds

(1) Ten einde die uitgawes van die Raad te bestry, moet elke werkgewer 20c per week aftrek van die verdienste van elk van sy werknemers vir wie 'n loon in klousule 4 (1) *(a)* (vi) en (vii) voorgeskryf word en 5c per week van alle ander werknemers, en by elke 20c aldus afgetrek, moet die werkgewer 15c voeg, en by elke 5c aldus afgetrek moet hy 5c voeg, en genoemde bedrae moet deur die werkgewer ooreenkom-

pledged. Stamps acquired by any person otherwise than in terms of this Agreement may be confiscated by the Council for the benefit of the general funds of the Council.

(10) Any unclaimed moneys standing to the credit of the Holiday Fund at the end of each year, shall be transferred to the benefit of the general funds of the Council if not claimed not later than 30 June of the following year. Nothing in this subclause shall be deemed to prevent the Council from making payment at any time after 30 June each following year and it shall be obligatory on the Council to consider and decide on the merits of all claims for payment after 30 June each following year.

(11) In the event of the expiration of this Agreement by effluxion of time or cessation for any other cause the Fund shall continue to be administered by the Council until it is either liquidated or transferred by the Council to any other fund constituted for the same purpose as that for which the original Fund was created or continued in a subsequent agreement.

(12) In the event of the dissolution of the Council or in the event of its ceasing to function during any period in which this Agreement is binding in terms of section 34 (2) of the Act, the Industrial Registrar may appoint a committee from employers and employees in the Industry on the basis of equal representation on both sides and the Fund shall continue to be administered by such committee. Any vacancy occurring on the committee may be filled by the Registrar from employers or employees, as the case may be, so as to ensure an equality of employers or employee representatives on the committee. In the event of such committee being unable or unwilling to discharge its duties or a deadlock arising thereon which renders the administration of the Fund impracticable or undesirable in the opinion of the Registrar, he may appoint a trustee or trustees to carry out the duties of the committee and such trustee shall possess all powers of the committee for such purpose. If upon the expiration of this Agreement there is no Council in existence, the Fund shall be liquidated by the Committee functioning in terms of this subclause, or the trustee or trustees, as the case may be, and if upon the expiration of the Agreement the affairs of the Council have already been wound up and its assets distributed, the balance of this Fund shall be distributed as provided for in section 34 (4) of the Act, as if it formed part of the general funds of the Council.

(13) Upon liquidation of the Fund in terms of subclause (11), the moneys remaining to the credit of the Fund, after the payment of all claims against the Fund, including administration and liquidation expenses, shall be paid into the general funds of the Council

22. First Aid

Every employer shall provide and maintain in good order suitable first-aid equipment on any premises where employees are employed by him.

23. Administration of Agreement

The Council shall be the body responsible for the administration of this Agreement and it may issue expressions of opinion not inconsistent with the provisions thereof for the guidance of employers and employees.

24. Exemptions

(1) The Council may, in writing, grant an exemption to any person or persons from any of the provisions of this Agreement for any good and sufficient reason.

(2) The Council shall fix, in respect of any person granted exemption under the provisions of this clause, the conditions subject to which such exemption is granted and the period during which such exemption shall operate: Provided that the Council may, if it deems fit, after notice in writing has been given to the person or persons concerned, withdraw any certificate of exemption.

(3) A certificate of exemption under the signature of the Secretary of the Council shall be issued to every person exempted. A certificate shall not be valid in an area other than that for which it was granted.

(4) A certificate of exemption may be amended or withdrawn by the Council at any time during the period for which it was granted without assigning any reason.

(5) An employer shall observe the modified conditions created by any certificate of exemption granted in accordance with the provisions of this clause.

25. General Fund

(1) For the purpose of meeting the expenses of the Council, each employer shall deduct 20c per week from the earnings of each of his employees for whom wages are prescribed in clause 4 (1) *(a)* (vi) and (vii) and 5c per week from all other employees, and for every 20c so deducted the employer shall contribute 15c and for every 5c so deducted the employer shall contribute 5c and the said amounts shall be

stig die prosedure wat in subklousule (2) voorgeskryf word, aan die Raad gestuur word: Met dien verstande dat die bedrag wat ten opsigte van hierdie klousule deur 'n werkgewer betaalbaar is, in geen week minder as R1 moet wees nie.

(2) Alle bedrae wat ten opsigte van die vorige maand se verskuldigde geld ooreenkomstig subklousule (1) betaal moet word, tesame met 'n opgawe van die getal werknemers in diens en hul ambagte en die besonderhede in subklousule (3) genoem, moet voor of op die sewende dag van elke maand aan die Sekretaris van die Raad gestuur word.

(3) Elke werkgewer moet, wanneer hy sy bydrae aan die Raad stuur, op die gedrukte vorms wat deur die Raad verskaf word, 'n lys verstrek van die ambagsmanne wat by hom in diens is.

(4) Indien 'n werkgewer nie werknemers soos in subklousule (1) gespesifiseer, in diens gehad het nie, moet sodanige werkgewer nogtans voor of op die sewende dag van die maand 'n opgawe indien met die woorde „Geen werknemers" oor die vorm geskryf, tesame met die minimum bydrae van R1 per week soos in subklousule (1) voorgeskryf.

(5) 'n Werknemer wat versuim om die werklike bedrag wat elke week ingevolge hierdie klousule betaalbaar is, te betaal, moet 'n bedrag gelyk aan 10 persent van die verskil tussen die bedrag betaalbaar en die bedrag wat in werklikheid betaal is, betaal bykomend by die bedrag wat te min betaal is.

26. Registrasie van Werkgewers

(1) *(a)* Elke werkgewer in die Bounywerheid wat nie alreeds ingevolge 'n vorige ooreenkoms by die Raad geregistreer is nie, moet binne sewe dae na die datum waarop hy 'n werkgewer geword het of waarop hierdie Ooreenkoms in werking getree het, naamlik die jongste datum, die volgende besonderhede aan die Sekretaris van die Raad stuur op 'n vorm wat deur die Raad voorgeskryf is:

(i) Sy volle naam en woonadres;
(ii) sy sakeadres (nie 'n posbusnommer nie);
(iii) die bedryf of bedrywe wat hy in die Bounywerheid beoefen;
(iv) die volle benaming of betiteling waaronder hy sake gaan doen.

(b) As die werkgewer 'n vennootskap of 'n maatskappy is, moet die inligting ingevolge paragraaf *(a)* ten opsigte van elke vennoot, direkteur, ens., verstrek word.

(c) Elke individuele werkgewer, vennootskap of maatskappy moet—

(i) die Raad binne 14 dae skriftelik in kennis stel van enige verandering in die benaming, betiteling, bestuur, vennote of adres van sodanige onderneming;
(ii) die Raad binne 14 dae skriftelik in kennis stel van enige permanente verandering in die aard van die saak se werksaamhede of van enige bykomende werksaamhede wat onder die bestaande geregistreerde naam, benaming of betiteling verrig word;
(iii) die Raad binne 14 dae nadat werksaamhede in die Bounywerheid gestaak is, skriftelik daarvan in kennis stel.

(2) Elke werkgewer in die Nywerheid op die datum van inwerkingtreding van hierdie Ooreenkoms, en elke werkgewer wat na daardie datum tot die nywerheid oortree, moet binne sewe dae na sodanige datum, of die datum waarop sodanige werkgewer met sy werksaamhede begin, na gelang van die geval, 'n waarborg by die Raad indien wat vir die Raad aanvaarbaar is, om twee weke die betaling ten opsigte van sy werknemers te dek van—

(a) lone soos in hierdie Ooreenkoms voorgeskryf;
(b) ander geldelike verpligtinge waarvoor die werkgewer ingevolge hierdie of enige ander Ooreenkoms van die Raad aanspreeklik is:

Met dien verstande dat die waarborg wat 'n werkgewer gee, vir 'n bedrag van minstens R250 moet wees, ongeag die getal werknemers in diens van sodanige werkgewer.

(3) Die sekretaris van die Raad moet die waarborg waarna in subklousule (2) verwys word aan die betrokke werkgewer terugstuur nadat hy ingevolge subklousule (1) *(c)* (iii) van die beëindiging van sake in kennis gestel is.

27. Agente

(1) Die Raad moet een of meer persone aanstel as agent of agente om met die uitvoering van hierdie Ooreenkoms behulpsaam te wees.

'n Agent het die reg om—

(a) te eniger tyd alle persele of plekke waar werksaamhede in die Bounywerheid uitgeoefen word, te betree indien hy redelike grond het om te vermoed dat 'n persoon daarin werksaam is;
(b) enige persoon wat hy in of by die perseel of plek aantref, hetsy alleen of in teenwoordigheid van 'n ander persoon wat hy geskik ag, mondeling te ondervra in verband met sake wat op hierdie Ooreenkoms betrekking het, en van daardie persoon te vereis om die vrae wat gestel word, te beantwoord;
(c) te eis dat dié boeke, tydstate, registers en dokumente wat hy

paid by the employer to the Council, in accordance with the procedure prescribed in subclause (2): Provided that the amount payable by an employer in respect of this clause shall not be less than R1 in any week.

(2) All amounts payable in accordance with the provisions of subclause (1) in respect of the previous month's dues, together with a statement showing the number of employees employed and their trades, as well as the particulars referred to in subclause (3), shall be forwarded by the employer to the Secretary of the Council not later than the seventh day of each month.

(3) Every employer shall, when forwarding his contributions to the Council, on printed forms supplied by the Council, enclose a list of the journeymen employed by him.

(4) Where an employer did not employ any employees as specified in subclause (1), such employer shall nevertheless submit a return on or before the seventh day of the month with the words "No employees" written across the form together with the minimum contribution of R1 per week as prescribed in subclause (1).

(5) An employer who fails to pay the actual amount due each week in terms of this clause, shall pay an amount of 10 per cent of the difference between the amount due and the amount actually paid, in addition to the amount underpaid.

26. Registration of Employers

(1) *(a)* Every employer in the Building Industry who is not already registered with the Council in pursuance of a previous Agreement shall within seven days of the date of becoming an employer or of this Agreement coming into force, whichever is the later, forward to the Secretary of the Council on a form prescribed by the Council the following particulars:

(i) His full name and residential address;
(ii) his business address other than a post office box number;
(iii) the trade or trades which he is carrying on in the Building Industry;
(iv) the full title or style under which his business is to be conducted.

(b) Where the employer is a partnership or a company, information in accordance with paragraph *(a)* shall be furnished in respect of each partner, director, etc.

(c) Every individual employer, partnership or company shall—

(i) notify the Council, in writing, within 14 days, of any change in the title, style, management, partners or address of such business;
(ii) give notice, in writing, to the Council, within 14 days, of any permanent change in the nature of the business operations or any additional operations conducted under the existing registered name, title or style;
(iii) give notice, in writing, to the Council, within 14 days of ceasing operations in the Building Industry.

(2) Every employer in the Industry at the date of coming into operation of this Agreement, and every employer who enters the Industry after that date shall, within seven days of such date, or of the date on which such employer commences operations, as the case may be, lodge with the Council a guarantee acceptable to the Council to cover the payment in respect of his employees of two weeks'—

(a) wages as prescribed in this Agreement;
(b) other financial obligations for which an employer is liable in terms of this or any other Agreement of the Council:

Provided that the guarantee lodged by any employer shall not be for an amount of less than R250 irrespective of the number of employees in the employment of such employer.

(3) The Secretary of the Council shall return the guarantee referred to in subclause (2) to the employer concerned, after being notified of the termination of business in terms of subclause (1) *(c)* (iii).

27. Agents

(1) The Council shall appoint one or more persons as agent or agents to assist in giving effect to the terms of this Agreement.

An agent shall have the right—

(a) at any time to enter any premises or place in which operations in the Building Industry are carried on when he has reasonable cause to believe that any person is employed therein;
(b) to orally examine, either alone or in the presence of any other person he may think fit, every person whom he finds in or about the premises or place and to require such person to answer the questions put to him with respect to matters relating to this Agreement;
(c) to require the production of, and to inspect, examine and make

University of Fort Hare
Together in Excellence

nodig ag om vas te stel of die bepalings van hierdie Ooreenkoms nagekom word, getoon word en om hulle te inspekteer, te ondersoek en afskrifte daarvan te maak.

(2) Wanneer die agent enige perseel of plek betree of enige persoon, boek of dokument inspekteer of ondersoek, kan hy 'n tolk met hom saamneem.

(3) Elke persoon vir wie hierdie Ooreenkoms bindend is, moet die agent alle genoemde fasiliteite verleen.

28. Vertoning van Ooreenkoms

Elke werkgewer moet in elke werkwinkel of werkplek waar besigheid gedoen word, 'n kopie van hierdie Ooreenkoms in albei amptelike tale vertoon op 'n opvallende plek wat vir al die werknemers maklik toeganklik is.

29. Vakvereningingledegeld

(1) Aangesien die Raad ingestem het om bydraes in te vorder van werknemers wat lede is van die vakvereniging, moet hy sodanige bydraes invorder ooreenkomstig die prosedure in hierdie klousule uiteengesit.

(2) Elke werkgewer wat lid is van die Building Industries Federation (South Africa) moet die bedrag van die ledegeld wat vir elke week of gedeelte van 'n week diens aan die vakvereniging betaalbaar is, aftrek van die weekloon van elke werknemer wat lid is van die vakvereniging en vir wie lone in klousule 4 (1) *(a)* (vi) en (vii) van hierdie Ooreenkoms voorgeskryf word.

(3) Elke werkgewer moet die bedrae ingevolge subklousule (2) hiervan afgetrek, elke week aan die Sekretaris van die Raad betaal.

(4) Elke werkgewer wat lid is van die Building Industries Federation (South Africa) en elke werknemer wat lid van die vakvereniging is, moet die Raad vrywaar teen enige eis wat mag ontstaan ten opsigte van hierdie klousule.

(5) Die Sekretaris van die Raad moet, behoudens subklousules (2) en (3) hiervan, die bedrae aan hom betaal ingevolge subklousule (3) hiervan, aan die betrokke vakvereniging stuur voor of op die laaste dag van die maand wat volg op dié waarin die bedrae betaal is, tesame met 'n staat wat die name toon van die betrokke werknemers en die bedrae wat van hul lone afgetrek is.

(6) Die Sekretaris van die Raad moet invorderingskoste van vyf persent aftrek van die geld betaalbaar aan die vakvereniging ingevolge subklousule (5) hiervan, en dié bedrag val aan die algemene fondse van die Raad toe.

30. Ampsdraers van die Vakvereniging

Ampsdraers van die vakvereniging moet in die gewone loop van hul pligte gedurende werktyd toegang hê tot boupersele en werkwinkels maar nie toegelaat word om in te meng met die ononderbroke werkverrigting van 'n werknemer nie, tensy toestemming vooraf van die werkgewer of sy behoorlik gemagtigde verteenwoordiger verkry is.

31. Nasionale Ontwikkelingsfonds vir die Bounywerheid

(1) Aangesien die Raad verwittig is van die instelling van die Nasionale Ontwikkelingsfonds vir die Bounywerheid [ingestel deur die Federasie van Bounywerhede (S.A.)], hierna die „Nasionale Fonds" genoem, magtig hy hierby die invordering van bydraes ooreenkomstig die prosedure hieronder uiteengesit ten einde die doelstellings te verwesenlik wat in die konstitusie van genoemde Nasionale Fonds uiteengesit is.

(2) Elke werkgewer moet, behoudens subklousules (3) en (4), 'n bedrag van 7c per week tot die Nasionale Fonds bydra ten opsigte van elke werknemer in sy diens vir wie lone in klousule 4 (1) *(a)* (i), (ii), (iii), (iv), (v), (vi) en (vii) voorgeskryf word.

(3) 'n Werkgewer mag geen storting doen ten opsigte van 'n werknemer wat minder as agt uur in 'n week vir hom gewerk het nie.

(4) Indien 'n werknemer gedurende dieselfde week by twee of meer werkgewers in diens was, moet die werkgewer by wie hy die eerste gedurende daardie week minstens agt uur in diens was, die storting vir daardie week doen.

(5) Die prosedure in klousule 25 voorgeskryf met betrekking tot die wyse waarop betaling aan die Raad gemaak moet word, is *mutatis mutandis* van toepassing op die storting van bydraes ingevolge hierdie klousule.

(6) Die Raad moet die totale bedrag aan bydraes wat hy kragtens subklousule (2) invorder, min invorderingskoste van twee en 'n half persent wat aan die algemene fondse van die Raad toeval, maandeliks in genoemde Nasionale Fonds stort.

(7) Eksemplare van die konstitusie en van geouditeerde jaarlikse rekenings en balansstate van die Nasionale Fonds moet by die Raad en die Direkteur-generaal van Mannekragbenutting ingedien word. Vir die

copies of such books, time sheets, records and documents as he may deem necessary for ascertaining whether the provisions of this Agreement are being complied with.

(2) The agent when entering any premises or place or inspecting or examining any person, book or document, may take with him an interpreter.

(3) Every person upon whom the provisions of this Agreement are binding shall grant the agent all the facilities referred to.

28. Exhibition of Agreement

Every employer shall cause a copy of this Agreement, in both official languages, to be exhibited in a conspicuous position easily accessible to all his employees, in every workshop or yard where he carries on business.

29. Trade Union Subscriptions

(1) The Council, having agreed to the collection of trade union subscriptions from employees who are members of the trade union, shall collect such subscriptions in accordance with the procedure detailed in this clause.

(2) Every employer who is a member of the Building Industries Federation (South Africa), shall deduct the amount of subscription payable to the trade union, in respect of each week or part of a week of employment, from the weekly wages of each employee who is a member of the trade union and for whom wages are prescribed in clause 4 (1) *(a)* (vi) and (vii) of this Agreement.

(3) Every employer shall pay the amounts deducted in terms of subclause (2) hereof to the Secretary of the Council each week.

(4) Every employer who is a member of the Building Industries Federation (South Africa) and every employee who is a member of the trade union shall indemnify the Council against any claim that may arise in respect of this clause.

(5) The Secretary of the Council shall, subject to the provisions of subclauses (2) and (3) hereof, remit the amounts paid to him in terms of subclause (3) hereof to the trade union concerned, not later than the last day of the month following that in which the amounts were paid, together with a statement reflecting the names of the employees concerned and the amounts deducted from their wages.

(6) The Secretary of the Council shall deduct a collection fee of five per cent from the money payable to the trade union in terms of subclause (5) hereof, which amount shall accrue to the general funds of the Council.

30. Trade Union Officials

Officials of the trade union shall in the ordinary course of their duties have access to building sites and workshops during working hours, but shall not be allowed to interfere with the continued performance of work by any employee without the prior consent of the employer or his duly authorised representative.

31. National Development Fund for the Building Industry

(1) The Council having been advised of the establishment of the National Development Fund for the Building Industry [inaugurated by the Building Industries Federation (S.A.)], hereinafter referred to as the "National Fund", hereby authorises, for the purposes of implementing the objects set forth in the constitution of the said National Fund, the collection of contributions in accordance with the procedure detailed hereunder.

(2) Every employer shall, subject to the provisions of subclauses (3) and (4), contribute to the National Fund an amount of 7c per week in respect of each of his employees for whom wages are prescribed in clause 4 (1) *(a)* (i), (ii), (iii), (iv), (v), (vi) and (vii).

(3) No payment shall be made by an employer in respect of an employee who works less than eight hours for him in any week.

(4) Where an employee is employed by two or more employers during the same week, the payment for that week shall be made by the employer by whom he was first employed during that week for not less than eight hours.

(5) The procedure prescribed in clause 25 relative to the manner in which payment shall be made to the Council, shall *mutatis mutandis* apply to the payment of contributions in terms of this clause.

(6) The Council shall each month pay over to the said National Fund the total amount of contributions collected by it in terms of subclause (2), less a collection fee of 2½ per cent, which amount shall accrue to the general funds of the Council.

(7) Copies of the constitution and of audited annual accounts and balance sheets of the National Fund shall be lodged with the Council and with the Director-General of Manpower Utilisation. For the pur-

toepassing van hierdie subklousule omvat die woord „konstitusie" alle wysigings wat van tyd tot tyd aan die konstitusie aangebring word.

32. Indiensneming van Jeugdiges

'n Werknemer mag niemand onder die ouderdom van 15 jaar in diens neem nie.

33. Werkgewersorganisasiegelde

(1) Elke werkgewer wat lid van die werkgewersorganisasie is, moet 'n bedrag van 5c per week aan die Raad betaal ten opsigte van elkeen van sy werknemers vir wie 'n loon in klousule 4 (1) *(a)* (vi) en (vii) voorgeskryf word.

(2) Geen betaling moet deur 'n werkgewer gedoen word ten opsigte van 'n werknemer wat minder as agt uur in 'n week gewerk het nie.

(3) Wanneer 'n werknemer gedurende enige bepaalde week vir meer as een lid van die werkgewersorganisasie gewerk het, moet die betaling wat in subklousule (1) voorgeskryf word, gedoen word deur die lid wat die werknemer eerste gedurende daardie week minstens agt uur in diens gehad het.

(4) Die prosedure in klousule 25 voorgeskryf met betrekking tot die wyse waarop betaling aan die Raad gemaak moet word, is *mutatis mutandis* van toepassing op die storting van bydraes ingevolge hierdie klousule.

(5) Die Raad moet binne die eerste sewe dae van elke maand aan die werkgewersorganisasie al die bedrae betaal wat ingevolge subklousule (4) gedurende die voorafgaande maand ontvang is, min invorderingskoste van twee en 'n half persent wat aan die algemene fondse van die Raad toeval.

34. Indiensneming van Leerlinge

(1) Geen werkgewer mag iemand as 'n leerling in diens neem nie, tensy die skriftelike toestemming van die Raad eers verkry is: Met dien verstande dat sodanige toestemming nie gegee mag word in die geval van 'n leerling wat minderjarig is nie.

(2) Aansoek om toestemming om 'n leerling in diens te neem, moet deur die werkgewer by die Raad gedoen word, en hy moet die volgende besonderhede verstrek:

(a) Die volle naam en ouderdom van die betrokke persoon;
(b) die aard van die werk wat van hom vereis word om te leer;
(c) die getal leerlinge in sy diens wat alreeds die werk leer; en
(d) die getal werknemers, behalwe leerlinge in sy diens, wat met sodanige werk besig is.

(3) Die Raad het die bevoegdheid om die diensvoorwaardes en die leertydperk in elke geval vas te stel en moet van die betrokke werkgewer en leerling vereis om 'n skriftelike kontrak ten opsigte van sodanige tydperk en voorwaardes aan te gaan, en sodanige tydperk en/of voorwaardes mag nie verander word nie tensy die toestemming van die Raad vooraf verkry is.

(4) Ondanks enige skriftelike kontrak wat ingevolge subklousule (3) aangegaan mag wees, kan die Raad te eniger tyd by skriftelike kennisgewing sy toestemming tot die indiensneming van 'n leerling intrek indien hy meen dat daar afdoende rede bestaan om dit te doen, en die werkgewer moet, by ontvangs van sodanige kennisgewing van die Raad, binne sewe dae afsien van die dienste van die leerling op wie die kennisgewing betrekking het.

(5) Wanneer toestemming ingevolge subklousule (4) ingetrek word, moet die werkgewer die kontrak in subklousule (3) vermeld binne sewe dae aan die Raad terugstuur vir kansellering.

(6) Geen werkgewer mag iemand wat voorheen 'n leerlingskontrak met 'n ander werkgewer aangegaan het as gevolg van toestemming ingevolge hierdie klousule verleen, in enige hoedanigheid in diens neem voordat die kontraktydperk deur die Raad bepaal voltooi is nie, tensy toestemming vooraf van die Raad verkry is, en geen werknemer wat voorheen 'n leerlingskontrak aangegaan het, mag homself voor die voltooiing van die kontrak in enige hoedanigheid by 'n ander werkgewer vir indiensneming aanmeld nie, tensy hy toestemming van die Raad verkry het om dit te doen.

35. Basis van Besoldiging

Ondanks andersluidende bepalings in hierdie Ooreenkoms, moet besoldiging vir alle werk gedoen, geskied teen minstens die skaal voorgeskryf vir die werksaamheid of werksaamhede wat verrig word, en moet dit nie op die tegniese vaardigheid of kwalifikasies van die betrokke werknemer gebaseer word nie.

36. Werwings- en Opleidingsfonds van die Bounywerheid

(1) Aangesien die Raad verwittig is van die instelling van die Werwings- en Opleidingsfonds van die Bounywerheid [ingestel deur die Federasie van Bounywerhede (S.A.)], hierna die „Opleidingsfonds"

poses of this subclause the term "constitution" shall include any amendments to the constitution adopted from time to time.

32. Employment of Juveniles

An employer shall not employ any person under the age of 15 years.

33. Employers' Organisation Fees

(1) Every employer who is a member of the employers' organisation shall pay to the Council in respect of each of his employees for whom wages are prescribed in clause 4 (1) *(a)* (vi) and (vii) an amount of 5c per week.

(2) No payment shall be made by an employer in respect of an employee who has worked for less than eight hours in any one week.

(3) Where an employee is employed by more than one member of the employers' organisation during any one week, the payment prescribed in subclause (1) shall be made by the member who first employed the employee during that week for not less than eight hours.

(4) The procedure prescribed in clause 25 relative to the manner in which payment shall be made to the Council, shall *mutatis mutandis* apply to the payment of contributions in terms of this clause.

(5) The Council shall within the first seven days of each month pay to the employers' organisation all the amounts received under subclause (4) during the preceding month, less a 2½ per cent collection fee, which amount shall accrue to the general funds of the Council.

34. Employment of Learners

(1) No employer shall employ any person as a learner, unless the written consent of the Council has first been obtained: Provided that such consent shall not be given in the case of a learner who is a minor.

(2) Application for permission to employ a learner shall be made to the Council by the employer who shall furnish the following particulars:

(a) The full name and age of the person concerned;
(b) the nature of the work he is required to learn;
(c) the number of learners in his employ who are already learning the work; and
(d) the number of employees, other than learners in his employ, who are engaged on such work.

(3) The Council shall have the power to fix the conditions of employment and period of learnership in each case and shall require the employer and learner concerned to enter into a written contract in respect of such period and conditions, which period and/or conditions shall not be varied without the prior consent of the Council.

(4) Notwithstanding any written contract which may have been entered into in terms of subclause (3), the Council may at any time by notice, in writing, withdraw its consent to the employment of any learner if it considers there is good reason to do so, and, on receipt of such notification from the Council, the employer shall within seven days dispense with the services of the learner to whom the notification refers.

(5) When permission is withdrawn in terms of subclause (4), the employer shall within seven days return to the Council for cancellation the contract referred to in subclause (3).

(6) No employer shall employ in any capacity any person who has previously entered into a learnership contract with another employer resulting from permission granted in terms of this clause without the contract period determined by the Council having been completed, unless prior permission is obtained from the Council, and no employee who has previously entered into a learnership contract shall offer himself for employment in any capacity with another employer prior to the completion of the contract unless he has obtained the permission of the Council to do so.

35. Basis of Payment

Notwithstanding anything to the contrary contained in this Agreement, payment for all work done shall be at not less than the rate prescribed for the operation or operations performed and shall not be based upon the technical skill or qualifications of the employee concerned.

36. Building Industries Recruitment and Training Fund

(1) The Council having been advised of the establishment of the Building Industries Recruitment and Training Fund [inaugurated by the Building Industries Federation (S.A.)], hereinafter referred to as the

IN LUMINE TUO VIDEBIMUS LUMEN
University of Fort Hare
Together in Excellence

genoem, magtig hy hierby die invordering van bydraes ooreenkomstig die prosedure hieronder uiteengesit ten einde die doelstellings te verwesenlik wat in die konstitusie van genoemde Opleidingsfonds uiteengesit is.

(2) Elke werkgewer moet, behoudens subklousules (3) en (4), 'n bedrag van 50c per week tot die Opleidingsfonds bydra ten opsigte van elke werknemer in sy diens vir wie lone in klousule 4 (1) *(a)* (i), (ii), (iii), (iv), (v), (vi) en (vii) voorgeskryf word.

(3) 'n Werkgewer mag geen storting ten opsigte van 'n werknemer doen wat minder as agt uur in 'n week vir hom gewerk het nie.

(4) Indien 'n werknemer gedurende dieselfde week by twee of meer werkgewers in diens was, moet die werkgewer by wie hy die eerste gedurende daardie week minstens agt uur in diens was, die storting vir daardie week doen.

(5) Die prosedure in klousule 25 voorgeskryf, is *mutatis mutandis* van toepassing op die storting van bydraes ingevolge hierdie klousule.

(6) Die Raad moet die totale bedrag van die bydraes wat hy ingevolge subklousule (2) ingevorder het, min invorderingskoste van twee en 'n half persent, wat aan die algemene fondse van die Raad toeval, elke maand in genoemde Opleidingsfonds stort.

(7) Eksemplare van die konstitusie en van geouditeerde jaarlikse rekenings en balansstate van die Opleidingsfonds moet by die Raad en die Direkteur-generaal van Mannekragbenutting ingedien word. Vir die toepassing van hierdie subklousule omvat die woord „konstitusie" alle wysigings wat van tyd tot tyd aan die konstitusie aangebring word.

37. Pensioenfonds

(1) Die Pensioenskema vir die Bouywerheid, Queenstown, (hierna die „Pensioenfonds" genoem), wat by Goewermentskennisgewing R.958 van 7 Junie 1974 ingestel is, word hierby voortgesit.

(a) Die oogmerk met die Pensioenfonds is om pensioen- en lewensversekeringsvoordele aan sy lede te verskaf.

(b) Ten einde uitvoering te gee aan die oogmerke van die Pensioenfonds moet die Raad met die Federated Insurance Co. Ltd onderhandel oor die instelling van 'n bevredigende Pensioen- en Lewensversekeringskema.

(c) Kopieë van alle dokumente wat gedetailleerde inligting bevat oor die Pensioenfonds en alle wysigings daarvan, moet by die Direkteur-generaal van Mannekragbenutting ingedien word.

(2) *Bydraes.*—

(a) Ooreenkomstig die prosedure in paragrawe *(d)* tot *(i)* voorgeskryf, moet elke werknemer vir wie lidmaatskap van die Pensioenfonds ingevolge subklousule (3) verpligtend is, elke week die volgende bedrae tot die Pensioenfonds bydra:

R1,60 per week vanaf die datum van inwerkingtreding van hierdie Ooreenkoms tot 31 Oktober 1980; en

R2,60 per week vanaf 3 November 1980.

(b) Elke werkgewer moet aan elke werknemer vir wie lidmaatskap van die Pensioenfonds ingevolge subklousule (3) verpligtend is, die volgende bedrae elke week betaal:

R2,00 per week vanaf die datum van inwerkingtreding van hierdie Ooreenkoms tot 31 Oktober 1980; en

R3,00 per week vanaf 3 November 1980.

(c) Elke werkgewer is daarop geregtig om weekliks die volgende bedrae van die besoldiging van 'n werknemer af te trek ten opsigte van wie betaling ingevolge paragrawe *(a)* en *(b)* hiervan gemaak is:

R3,60 per week vanaf die datum van inwerkingtreding van hierdie Ooreenkoms tot 31 Oktober 1980; en

5,60 per week vanaf 3 November 1980.

(d) 'n Werkgewer mag geen aftrekking ingevolge paragraaf *(c)* maak ten opsigte van 'n werknemer wat minder as agt uur in 'n week vir hom gewerk het nie.

(e) Indien 'n werknemer gedurende dieselfde week by twee of meer werkgewers in diens was, moet die werkgewer by wie hy die eerste gedurende daardie week minstens agt uur in diens was, die aftrekking ingevolge paragraaf *(c)* vir daardie week maak.

(f) Elke werkgewer moet ten opsigte van elke bedrag wat hy aldus ingevolge paragraaf *(b)* betaal het, op elke betaaldag aan elkeen van sy betrokke werknemers 'n seël of ander bewysstuk uitreik ter waarde van sodanige bedrag of wat sodanige bedrag insluit.

(g) Elke werknemer moet sodanige seëls of bewysstuk onmiddellik in sy bydraeboekie inplak wat hy moet behou.

(h) Die Raad kan na goeddunke die seël of bewysstuk en bydraeboekie in hierdie klousule bedoel, kombineer met enige ander seëls, bewysstukke of bydraeboekies wat hy van tyd tot tyd besluit om in te stel.

(i) Klousule 21 is *mutatis mutandis* van toepassing op die seëls en bydraeboekies wat in hierdie klousule bedoel word.

(j) Die bydraes wat ingevolge hierdie klousule deur die Raad ingevorder word, moet aan die Federated Insurance Co. Ltd betaal word: Met dien verstande dat die Raad een en 'n half persent van die ingevorderde bydraes as administrasiekoste kan

"Training Fund", hereby authorises for the purpose of implementing the objects set forth in the constitution of the said Training Fund, the collection of contributions in accordance with the procedure detailed hereunder.

(2) Each employer shall, subject to the provisions of subclauses (3) and (4), contribute to the Training Fund an amount of 50c per week in respect of each of his employees for whom wages are prescribed in clause 4 (1) *(a)* (i), (ii), (iii), (iv), (v), (vi) and (vii).

(3) No payment shall be made by an employer in respect of an employee who works less than eight hours for him in any week.

(4) Where an employee is employed by two or more employers during the same week, the payment for that week shall be made by the employer by whom he was first employed during that week for not less than eight hours.

(5) The procedure prescribed in clause 25 shall *mutatis mutandis* apply to the payment of contributions in terms of this clause.

(6) The Council shall each month pay to the said Training Fund the total amount of contributions collected by it in terms of subclause (2), less a collection fee of 2½ per cent which amount shall accrue to the general funds of the Council.

(7) Copies of the constitution and of audited accounts and balance sheets of the Training Fund shall be lodged with the Council and with the Director-General of Manpower Utilisation. For the purposes of this subclause the term "constitution" shall include any amendments to the constitution adopted from time to time.

37. Pension Fund

(1) The Queenstown Building Industry Pension Scheme (hereinafter referred to as the "Pension Fund"), established under Government Notice R.958 of 7 June 1974, is hereby continued.

(a) The object of the Pension Fund is to provide pension and life assurance benefits for members.

(b) For the purpose of implementing the objects of the Pension Fund the Council shall negotiate with the Federated Insurance Co. Ltd. for the establishment of a satisfactory Pension and Life Assurance Scheme.

(c) Copies of all documents containing detailed information of the Pension Fund and any amendments thereto, shall be lodged with the Director-General of Manpower Utilisation.

(2) *Contributions.*—

(a) In accordance with the procedure laid down in paragraphs *(d)* to *(i)*, every employee for whom membership of the Pension Fund is compulsory in terms of subclause (3) shall contribute the following amounts to the Pension Fund every week:

R1,60 per week from the date of coming into operation of this Agreement up to 31 October 1980; and

R2,60 per week from 3 November 1980.

(b) Every employer shall pay to every employee for whom membership of the Pension Fund is compulsory in terms of subclause (3), the following amounts every week:

R2,00 per week from the date of coming into operation of this Agreement up to 31 October 1980; and

R3,00 per week from 3 November 1980.

(c) Every employer shall be entitled to deduct the following amounts every week from the remuneration of an employee in respect of whom payment has been made in terms of paragraphs *(a)* and *(b)* hereof:

R3,60 per week from the date of coming into operation of this Agreement up to 31 October 1980; and

R5,60 per week from 3 November 1980.

(d) No deduction shall be made in terms of paragraph *(c)* by an employer in respect of an employee who works less than eight hours for him in any week.

(e) Where an employee is employed by two or more employers during the same week the deduction in terms of paragraph *(c)* for that week shall be made by the employer by whom he was first employed during that week for not less than eight hours.

(f) Every employer shall in respect of each amount so paid by him in terms of paragraph *(b)*, issue on each pay-day to each of his employees concerned a stamp or other voucher to the value of such amount or which includes such amount.

(g) Every employee shall immediately affix such stamps or voucher in his contribution book which shall be retained by him.

(h) The Council may in its discretion combine the stamp or voucher and contribution book referred to in this clause with any other stamps, vouchers or contribution books which it may from time to time decide to introduce.

(i) The provision of clause 21 shall *mutatis mutandis* apply to stamps and contribution books referred to in this clause.

(j) The contributions collected by the Council in terms of this clause shall be paid to the Federated Insurance Co. Ltd: Provided that the Council may retain one and a half per cent of the contribu-

behou, welke bedrag in die algemene fondse van die Raad gestort moet word.

(3) *Lidmaatskap.*—

(a) Behoudens die bepalings van subklousule (2) *(e)*, is lidmaatskap van die Pensioenfonds verpligtend vir alle ambagsmanne.

(b) Ander persone as dié in paragraaf *(a)* bedoel wat aktief by die Nywerheid betrokke of daarin werksaam is, kan na goeddunke van die Raad tot lidmaatskap van die Fonds toegelaat word en hierdie klousule is *mutatis mutandis* van toepassing op iemand wat aldus toegelaat word: Met dien verstande egter dat van sodanige persoon vereis word om minstens die gesamentlike bydrae van lede en werkgewers soos in subklousule (2) voorgeskryf by te dra.

(c) Elke werknemer vir wie lidmaatskap van die Fonds ingevolge paragraaf *(a)* hiervan verpligtend is, moet, indien hy dit nie reeds ingevolge 'n vorige ooreenkoms gedoen het nie, die aansoekvorm wat deur die Raad voorgeskryf word, invul en sodanige ingevulde vorm by die Sekretaris van die Raad indien binne 21 dae na die datum waarop—

(i) hierdie klousule in werking tree, indien hy op sodanige datum in die Bounywerheid in diens is;

(ii) hy tot die bounywerheid toetree of weer toetree of daarin in diens geneem word.

tions collected as administrative expenses, which amount shall be paid into the general funds of the Council.

(3) *Membership.*—

(a) Subject to the provisions of subclause (2) *(e)*, membership of the Pension Fund shall be compulsory for all journeymen.

(b) Persons other than those referred to in paragraph *(a)* who are actively engaged or employed in the Industry may in the discretion of the Council be admitted to membership of the Fund and the provisions of this clause shall *mutatis mutandis* apply to any person so admitted: Provided, however, that such person shall be required to contribute not less than the combined contribution of members and employers as prescribed in subclause (2).

(c) Every employee for whom membership of the Fund is compulsory in terms of paragraph *(a)* hereof, shall, if he has not already done so in terms of a previous agreement, complete the application form prescribed by the Council and lodge such completed form with the Secretary of the Council within 21 days of the date on which—

(i) this clause comes into operation, if employed in the Building Industry at such date;

(ii) he enters or re-enters or becomes employed in the Building Industry.

38. Diensopgawevorms

(1) Elke werkgewer op wie die bepalings van hierdie Ooreenkoms van toepassing is, moet 'n diensopgawevorm aan die Sekretaris van die Raad voorlê wat die volle name, bydraekaartnommer en die nommer van die onderskeie soorte seëls toon wat elke week uitgereik is aan elke werknemer in sy diens vir wie lone in klousule 4 (1) *(a)* (vi) en (vii) van hierdie Ooreenkoms voorgeskryf word. Die werkgewer moet sodanige vorms by die Sekretaris van die Raad kry en moet dit, behoorlik ingevul, aan die Sekretaris van die Raad terugbesorg voor of op die sewende dag van die maand wat volg op dié waarin die werknemers in diens was.

(2) Elke werkgewer op wie hierdie Ooreenkoms van toepassing is, moet die Sekretaris van die Raad binne sewe dae in kennis stel van die indiensneming of diensbeëindiging van 'n werknemer in subklousule (1) hiervan vermeld. Sodanige kennisgewing van indiensneming of diensbeëindiging moet geskied op 'n vorm deur die Raad voorgeskryf, wat van die Sekretaris van die Raad verkrygbaar is.

(3) Waar 'n werkgewer geen werknemers soos in subklousule (1) hiervan vermeld, gedurende 'n maand in diens gehad het nie, moet sodanige werkgewer nogtans 'n vorm voor die sewende dag van die volgende maand indien met die woorde „Geen werknemers" oor die vorm geskryf, en die inligting wat ingevolge klousule 25 (4) van die Ooreenkoms vereis word, moet in die vorm verstrek word.

38. Employment Return Forms

(1) Every employer to whom the provisions of this Agreement apply, shall submit an employment return form to the Secretary of the Council showing the full names, contribution card number and the number of the various stamp denominations issued each week to each employee in his employ and for whom wages are prescribed in clause 4 (1) *(a)* (vi) en (vii) of this Agreement. Such forms shall be obtained by the employer from the Secretary of the Council and must be returned properly completely to the Secretary of the Council not later than the seventh day of the month following that in which the employees were employed.

(2) Every employer to whom this Agreement applies shall notify the Secretary of the Council within seven days of the engagement or termination of service of any employee referred to in subclause (1) hereof. Such notice of engagement or termination shall be made on a form prescribed by the Council and obtainable from the Secretary of the Council.

(3) Where an employer did not employ any employees as specified in subclause (1) hereof during any month, such employer shall nevertheless submit a form before the seventh day of the following month with the words "No employees" written across the form and reflecting the information required in terms of clause 25 (4) of the Agreement.

39. Gekonsolideerde Seël

Die Raad kan na goeddunke die seëls en bydraekaarte in hierdie Ooreenkoms vermeld, kombineer met enige ander seëls en bydraekaarte wat alreeds deur die Raad uitgereik is vir enige ander fondse wat deur die Raad geadministreer word, en dit moet die vorm aanneem wat die Raad van tyd tot tyd bepaal.

39. Consolidated Stamp

The Council may at its discretion combine the stamps and contribution cards referred to in this Agreement, with any other stamps and contribution cards already issued by the Council in respect of any other funds administered by it, and these shall be in such form as may be determined by the Council from time to time.

40. Algemeen

(1) Geen ooreenkoms, uitdruklik of stilswyend, hetsy dit aangegaan word voordat of nadat hierdie Ooreenkoms in werking tree, mag die uitwerking hê dat dit die betaling aan 'n werknemer van minder besoldiging as dié wat in hierdie Ooreenkoms voorgeskryf word of die toepassing op 'n werknemer van enige behandeling of die toekenning aan hom van enige bystand wat vir hom minder gunstig is as die behandeling of bystand in hierdie Ooreenkoms of enige ander ooreenkoms voorgeskryf, toelaat nie, en dit mag ook nie 'n afstanddoening van die toepassing op 'n werknemer van enige bepaling van hierdie Ooreenkoms of enige ander ooreenkoms bewerkstellig nie. Elke sodanige ooreenkoms is ongeldig.

(2) Elke bepaling, subklousule of klousule skep 'n reg of verpligting, na gelang van die geval, onafhanklik van die bestaan van ander bepalings. As 'n bepaling, subklousule of klousule van hierdie Ooreenkoms ongeldig of *ultra vires* is vir sover dit die bevoegdhede van die partye of die Minister betref—hetsy voor of na die publikasie van hierdie Ooreenkoms in die *Staatskoerant* deur die Minister kragtens die Wet—

40. General

(1) No agreement, express or implied, whether entered into before or after the coming into operation of this Agreement, shall operate to permit of the payment to any employee of remuneration less than that prescribed in this Agreement or of the application to any employee of any treatment, or the granting to him of any benefits, less favourable to him than the treatment or benefits prescribed in this or any other Agreement nor shall it effect any waiver by any employee of the application to him of any provision of this or any other Agreement. Any such agreement shall be void.

(2) Every provision, subclause or clause shall create a right or obligation, as the case may be, independently of the existence of other provisions. In the event of any provision, subclause or clause of this Agreement being inoperative or *ultra vires* the powers of the parties or the Minister either before or after publication of this Agreement in the *Government Gazette* by the Minister under the provisions of the Act, this

raak dit hoegenaamd nie die res van die Ooreenkoms nie, wat in so 'n geval die Ooreenkoms uitmaak.

Namens die partye op hede die 2de dag van Junie 1980 te Queenstown onderteken.

K. J. LITTLEJOHNS,
Voorsitter van die Raad.

J. STONE,
Ondervoorsitter van die Raad.

P. P. HUGO,
Sekretaris van die Raad.

R.1827] [5 September 1980

WET OP FABRIEKE, MASJINERIE EN BOUWERK, 1941

BOUNYWERHEID, QUEENSTOWN

Ek, STEPHANUS PETRUS BOTHA, Minister van Mannekragbenutting, verklaar hierby, kragtens artikel 22 (1) van die Wet op Fabrieke, Masjinerie en Bouwerk, 1941, dat die bepalings van die Ooreenkoms en kennisgewing in verband met die Bounywerheid, gepubliseer by Goewermentskennisgewing R.1826 van 5 September 1980, oor die algemeen vir werknemers wie se werkure en besoldiging ten opsigte van oortydwerk, openbare feesdae en werk op Sondae en openbare feesdae daarby gereël word, nie minder gunstig is nie as die desbetreffende bepalings van genoemde Wet.

S. P. BOTHA
Minister van Mannekragbenutting

shall in no way affect the remainder of the Agreement, which shall in that event constitute the Agreement.

Signed on behalf of the parties at Queenstown this 2nd day of June 1980.

K. J. LITTLEJOHNS,
Chairman of the Council.

J. STONE,
Vice-Chairman of the Council.

P. P. HUGO,
Secretary of the Council.

R.1827] [5 September 1980

FACTORIES, MACHINERY AND BUILDING WORK ACT, 1941

BUILDING INDUSTRY, QUEENSTOWN

I, STEPHANUS PETRUS BOTHA, Minister of Manpower Utilisation, hereby, in terms of section 22 (1) of the Factories, Machinery and Building Work Act, 1941, declare the provisions of the Agreement and notice relating to the Building Industry, published under Government Notice R.1826 of 5 September 1980, to be, on the whole, not less favourable to the employees whose hours of work and remuneration in respect of overtime, public holidays and work on Sundays and public holidays are regulated thereby, than the relative provisions of the said Act.

S. P. BOTHA
Minister of Manpower Utilisation

INHOUD

Departement van Mansburgbenutting

GOEWERMENTSKENNISGEWINGS

No.		Bladsy
R.1826	Wet op Nywerheidsversoening, 1956: Bousywerheid, Queenstown	1
R.1827	Wet op Fabrieke, Masjinerie en Bouwerk, 1941: Bousywerheid, Queenstown	17

CONTENTS

Department of Manpower Utilization

GOVERNMENT NOTICES

No.		Page
R.1826	Industrial Conciliation Act, 1956: Building Industry, Queenstown	1
R.1827	Factories, Machinery and Building Work Act, 1941: Building Industry, Queenstown	17

IN LUMINE TUO VIDEBIMUS LUMEN
University of Fort Hare
Together in Excellence

GEDRUK VIR DIE STAATSDRUKKER, PRETORIA, DEUR KAAP & TRANSVAAL DRUKKERS (EDMS) BPK, KAAPSTAD—88271B/12 300
PRINTED FOR THE GOVERNMENT PRINTER, PRETORIA, BY CAPE & TRANSVAAL PRINTERS (PTY) LTD, CAPE TOWN—88271B/12 300

7206
University of Fort Hare
Together in Excellence

STAATSKOERANT
VAN DIE REPUBLIEK VAN SUID-AFRIKA

REPUBLIC OF SOUTH AFRICA
GOVERNMENT GAZETTE

REGULASIEKOERANT No. 3065 PRYS + 1c AVB 20c PRICE + 1c GST REGULATION GAZETTE No. 3065
As 'n Nuusblad by die Poskantoor Geregistreer BUITELANDS 30c ABROAD *Registered at the Post Office as a Newspaper*
POSVRY · POST FREE

KAAPSTAD, 5 SEPTEMBER 1980
CAPE TOWN, 5 SEPTEMBER 1980

VOL. 183] [No. 7206

IN LUMINE TUO VIDEBIMUS LUMEN
University of Fort Hare
Together in Excellence

GOEWERMENTSKENNISGEWINGS

DEPARTEMENT VAN MANNEKRAGBENUTTING

R.1828] [5 September 1980

WET OP NYWERHEIDSVERSOENING, 1956

MEUBELNYWERHEID, OOSTELIKE KAAPPROVINSIE

SIEKTEBYSTANDSVERENIGINGOOREENKOMS

Ek, STEPHANUS PETRUS BOTHA, Minister van Mannekragbenutting, verklaar hierby, kragtens artikel 48 (1) *(a)* van die Wet op Nywerheidsversoening, 1956, dat die bepalings van die Ooreenkoms wat in die Bylae hiervan verskyn en op die Meubelnywerheid betrekking het, met ingang van die tweede Maandag na die datum van publikasie van hierdie kennisgewing en vir die tydperk wat op 31 Augustus 1985 eindig, bindend is vir die werkgewersorganisasie en die vakverenigings wat genoemde Ooreenkoms aangegaan het en vir die werkgewers en werknemers wat lede van genoemde organisasie of verenigings is.

S. P. BOTHA
Minister van Mannekragbenutting

GOVERNMENT NOTICES

DEPARTMENT OF MANPOWER UTILISATION

R.1828] [5 September 1980

INDUSTRIAL CONCILIATION ACT, 1956

FURNITURE MANUFACTURING INDUSTRY, EASTERN CAPE PROVINCE

SICK BENEFIT SOCIETY AGREEMENT

I, STEPHANUS PETRUS BOTHA, Minister of Manpower Utilisation, hereby, in terms of section 48 (1) *(a)* of the Industrial Conciliation Act, 1956, declare that the provisions of the Agreement which appears in the Schedule hereto and which relates to the Furniture Manufacturing Industry, shall be binding, with effect from the second Monday after the date of publication of this notice and for the period ending 31 August 1985, upon the employers' organisation and the trade unions which entered into the said Agreement and upon the employers and employees who are members of the said organisation or unions.

S. P. BOTHA
Minister of Manpower Utilisation

BYLAE

NYWERHEIDSRAAD VIR DIE MEUBELNYWERHEID VAN DIE OOSTELIKE KAAPPROVINSIE

SIEKTEBYSTANDSVERENIGINGOOREENKOMS

ingevolge die Wet op Nywerheidsversoening, 1956, gesluit deur en aangegaan tussen die

Midland Furniture Manufacturers' Association

(hierna die „werkgewers" of die „werkgewersorganisasie" genoem), aan die een kant, en die

National Union of Furniture and Allied Workers of South Africa

en die

National Association of Furniture and Allied Workers of South Africa

(hierna die „werknemers" of die „vakverenigings" genoem), aan die ander kant,

wat die partye is by die Nywerheidsraad vir die Meubelnywerheid van die Oostelike Kaapprovinsie.

1. Toepassingsbestek van Ooreenkoms

(1) Hierdie Ooreenkoms moet in die Meubelnywerheid van die Oostelike Kaapprovinsie nagekom word—

(a) deur alle werkgewers wat lede van die werkgewersorganisasie is en deur alle werknemers wat lede van enige van die vakverenigings is en wat onderskeidelik by die Meubelnywerheid van die Oostelike Kaapprovinsie betrokke of daarin werksaam is;

(b) in die landdrosdistrikte Port Elizabth, Cradock, Graaff-Reinet, Humansdorp, Hankey, Somerset-Oos, Aberdeen, Adelaide, Albany, Alexandria, Bathurst, Bedford, Colesberg, Hanover, Hofmeyr, Jansenville, Joubertina, Kirkwood, Middelburg (K.P.), Murraysburg, Noupoort, Pearston, Richmond (K.P.) Steytlerville, Steynsburg, Uniondale, Uitenhage, Venterstad en Willowmore.

(2) Ondanks subklousule (1), is hierdie Ooreenkoms—

(a) van toepassing slegs op werknemers vir wie daar lone in die Hoofooreenkoms voorgeskryf word en op die werkgewers van sodanige werknemers;

(b) van toepassing op vakleerlinge vir sover hulle nie onbestaanbaar is met die Wet op Vakleerlinge, 1944, of 'n ooreenkoms aangegaan of 'n voorwaarde daarkragtens vasgestel nie.

2. Geldigheidsduur van Ooreenkoms

Hierdie Ooreenkoms tree in werking op 'n datum wat die Minister van Mannekragbenutting kragtens artikel 48 (1) van die Wet vasstel, en bly van krag vir 'n tydperk van vyf jaar of vir dié tydperk wat hy bepaal.

3. Woordomskrywing

Alle uitdrukkings wat in hierdie Ooreenkoms gebesig en in die Wet op Nywerheidsversoening, 1956, omskryf word, het dieselfde betekenis as in dié Wet, en tensy die teenoorgestelde bedoeling blyk, word daar met woorde en uitdrukkings wat die manlike geslag aandui, ook vroue bedoel en word daar met woorde en uitdrukkings wat die enkelvoud aandui, ook die meervoud bedoel, en omgekeerd; voorts, tensy onbestaanbaar met die samehang, beteken—

„Wet" die Wet op Nywerheidsversoening, 1956;

„vakleerling" 'n werknemer wat gebind is deur 'n skriftelike leerlingkontrak wat ingevolge die Wet op Vakleerlinge, 1944, geregistreer is;

„ouditeur" 'n openbare rekenmeester soos in die Wet omskryf;

„los werknemer" 'n werknemer wat hoogstens drie dae in 'n bepaalde week by dieselfde werkgewer in diens is vir die doel om grondstowwe van enige aard te laai en/of af te laai en/of te berg;

„Komitee" die Mediese Komitee wat ooreenkomstig klousule 17 van hierdie Ooreenkoms aangestel is;

„Raad" die Nywerheidsraad vir die Meubelnywerheid, Oostelike Kaapprovinsie;

„afhanklikes" dié persone wat tot die Vereniging toegelaat is as afhanklikes ooreenkomstig klousule 10 van hierdie Ooreenkoms;

„Meubelnywerheid" of „Nywerheid", sonder om die gewone betekenis van die uitdrukking eniger wyse te beperk, die Nywerheid waarin werkgewers en werknemers met mekaar geassosieer is vir die vervaardiging, òf in hul geheel òf gedeeltelik, van alle soorte meubels, afgesien van die materiaal wat gebruik word, en omvat dit onder andere die volgende werksaamhede:

Herstel-, stoffeer-, herstoffeer-, beits-, spuit- of poleerwerk en/of herpoleerwerk, die maak van los oortreksels en/of stoelkussings en/of die maak en/of herstel van raamveermatrasse en/of rame vir stoffeerwerk, houtmasjienwerk, fineerwerk, houtdraaiwerk, houtsnywerk in verband met die vervaardiging

SCHEDULE

INDUSTRIAL COUNCIL FOR THE FURNITURE MANUFACTURING INDUSTRY OF THE EASTERN CAPE PROVINCE

SICK BENEFIT SOCIETY AGREEMENT

in accordance with the provisions of the Industrial Conciliation Act, 1956, made and entered into by and between the

Midland Furniture Manufacturers' Association

(hereinafter referred to as the "employers" or the "employers' organisation"), of the one part, and the

National Union of Furniture and Allied Workers of South Africa

and the

National Association of Furniture and Allied Workers of South Africa

(hereinafter referred to as the "employees" or the "trade unions"), of the other part,

being the parties to the Industrial Council for the Furniture Manufacturing Industry of the Eastern Cape Province.

1. Scope of Application of Agreement

(1) The terms of this Agreement shall be observed in the Furniture Manufacturing Industry of the Eastern Cape Province—

(a) by all employers who are members of the employers' organisation and by all employees who are members of the trade unions and who are engaged or employed respectively in the said Industry;

(b) within the Magisterial Districts of Port Elizabeth, Cradock, Graaff-Reinet, Humansdorp, Hankey, Somerset East, Aberdeen, Adelaide, Albany, Alexandria, Bathurst, Bedford, Colesberg, Hanover, Hofmeyr, Jansenville, Joubertina, Kirkwood, Middelburg (C.P.), Murraysburg, Noupoort, Pearston, Richmond (C.P.), Steytlerville, Steynsburg, Uniondale, Uitenhage, Venterstad and Willowmore.

(2) Notwithstanding the provisions of subclause (1), the terms of this Agreement shall—

(a) only apply to employees for whom wages are prescribed in the Main Agreement and to the employers of such employees;

(b) apply to apprentices in so far as they are not inconsistent with the provisions of the Apprenticeship Act, 1944, or any contract entered into or any condition fixed thereunder.

2. Period of Operation of Agreement

This Agreement shall come into operation on a date to be fixed by the Minister of Manpower Utilisation in terms of section 48 (1) of the Act, and shall remain in operation for a period of five years, or for such period as may be determined by him.

3. Definitions

All expressions used in this Agreement, which are defined in the Industrial Conciliation Act, 1956, shall have the same meaning as in that Act and unless the contrary intention appears, all words and expressions importing the masculine shall include the feminine gender, and those signifying the singular shall include the plural and vice versa; further, unless inconsistent with the context—

"Act" means the Industrial Conciliation Act, 1956;

"apprentice" means an employee who is bound by a written contract of apprenticeship, registered under the provisions of the Apprenticeship Act, 1944;

"auditor" means a public accountant as defined in the Act;

"casual employee" means an employee who is employed by the same employer for not more than three days in any one week for the purpose of loading and/or off-loading and/or storing raw materials of any kind;

"Committee" means the Medical Committee appointed in terms of the provisions of clause 17;

"Council" means the Industrial Council for the Furniture Manufacturing Industry, Eastern Cape Province;

"dependants" means those persons admitted to the Society as dependants in accordance with the provisions of clause 10;

"Furniture Industry" or "Industry" means, without in any way limiting the ordinary meaning of the expression, the Industry in which employers and employees are associated for the manufacture, either in whole or in part, of all types of furniture, irrespective of the materials used, and shall include, *inter alia*, the following operations:

Repairing, upholstering, re-upholstering, staining, spraying or polishing and/or repolishing, making of loose covers and/or cushions and/or the making and/or repairing of box spring mattresses and/or frames for upholstering, wood-machining, veneering, wood-turning, carving in connection with the

en/of herstel van meubels, poleer- en/of herpoleerwerk van klaviere of die vervaardiging van en/of beits-, spuit- en poleerwerk en/of herpoleerwerk aan meubels vir teekamers, kantore, kerke, skole, kroeë of teaters, en kabinette vir musiekinstrumente en radio- of draadlooskabinette en ook die vervaardiging van of die prosesse vir die vervaardiging van beddegoed, wat so omskryf en uitgelê moet word dat dit alle soorte of tipes matrasse, veermatrasse, bomatrasse, kopkussings, peule en stoelkussings insluit, en ook die werksaamhede wat uitgevoer word op alle persele waar houtmasjien-, houtdraai- en/of houtsnywerk uitgevoer word in verband met die vervaardiging van meubels; en ook nog herstel-, herstoffeer- of herpoleerwerk aan meubels in of in verband met bedryfsinrigtings waarin die vervaardiging van meubels of 'n werksaamheid wat in verband staan met die finale bereiding van 'n meubelstuk vir verkoop, òf in sy geheel òf gedeeltelik, uitgevoer word, en die fineerwerk aan gelamelleerde blokbord- of laaghoutdeure wat vir meubels gebruik word, en alle onderdele of materiaal wat by die vervaardiging van meubels gebruik word, maar uitgesonderd die vervaardiging van artikels wat hoofsaaklik van mandjiesgoed, gras en/of rottang gemaak word, en die vervaardiging van metaalmeubels, met inbegrip van die vervaardiging van metaalkatels;

„leerling" 'n werknemer, uitgesonderd 'n vakleerling, arbeider, leerling-verpakker of proefleerling wat ten tyde van sy indiensneming 'n minderjarige is of was en in diens is om enige klas werk te leer wat in sy leerlingsertifikaat aangedui word;

„Hoofooreenkoms" enige geldige ooreenkoms vir die Meubelnywerheid, Oostelike Kaapprovinsie, gepubliseer ingevolge artikel 48 van die Wet, waarin lone voorgeskryf word of, by ontstentenis van so 'n ooreenkoms, die jongste loonooreenkoms wat ingevolge die Wet vir die Nywerheid gepubliseer is;

„lid" 'n persoon wat behoorlik as lid van die Vereniging toegelaat is ooreenkomstig klousule 6;

„regulasies" die regulasies wat van tyd tot tyd deur die Mediese Komitee opgestel word ooreenkomstig klousule 25;

„siekte" ook kwale, en ongeskiktheid weens besering;

„Vereniging" die Siektebystandsvereniging van Oos-Kaaplandse Meubelwerkers wat kragtens klousule 4 gestig word;

„loon" die bedrag geld aan 'n werknemer betaalbaar ingevolge die Hoofooreenkoms ten opsigte van sy gewone werkure: Met dien verstande dat indien 'n werkgewer gereeld aan 'n werknemer ten opsigte van sodanige gewone werkure 'n bedrag betaal wat meer is as dié wat in die Hoofooreenkoms voorgeskryf word, dit sodanige hoër bedrag beteken.

4. Siektebystandsvereniging van Oos-Kaaplandse Meubelwerkers

(1) Hierby word 'n vereniging gestig wat bekend sal staan as die „Siektebystandsvereniging van Oos-Kaaplandse Meubelwerkers" hierna die „Vereniging" genoem.

(2) Die Vereniging bestaan uit—

(a) geld of ander bates wat na die Vereniging oorgedra word vanaf enige ander Siektebystandsvereniging;
(b) bydraes ooreenkomstig klousule 16;
(c) rente verkry uit die belegging van geld van die Vereniging; en
(d) alle ander geld waarop die Vereniging geregtig word.

5. Doelstellings

(1) Die doelstellings van die Vereniging is om fondse deur middel van ledegeld, bydraes en skenkings bymekaar te maak en in stand te hou met die doel om, ooreenkomstig hierdie Ooreenkoms en die regulasies, lede en hul afhanklikes te voorsien van mediese, chirurgiese en oftalmiese dienste en behandeling, medisyne, verbande, geriewe, hospitaal- of verpleeginrigtingbehandeling wanneer vry beddens nie ooreenkomstig die bepalings van die betrokke provinsiale ordonnansie in 'n hospitaal verkrygbaar is nie en wanneer behandeling, in laasgenoemde geval, dringend nodig is; om siektebesoldiging en dié ander bystand en hulp wat die Komitee van tyd tot tyd bepaal, aan lede te verskaf en om maatreëls te tref vir die voorkoming van siekte en die verbetering en bevordering van gesondheid onder lede en hul afhanklikes.

(2) In verband met die verwesenliking van voornoemde doelstellings, kan die Vereniging—

(a) dié dokters, verpleegsters, aptekers en ander persone wat hy wenslik ag, in diens neem, in diens hou of kontrakte met hulle aangaan;
(b) 'n hospitaal, verpleeginrigting, herstellingsoord of 'n dergelike inrigting of 'n spreekkamer of apteek vir die versorging van lede en hul afhanklikes stig en/of bestuur;
(c) met 'n hospitaal, verpleeginrigting, herstellingsoord of 'n dergelike inrigting 'n kontrak aangaan vir die versorging van lede en hul afhanklikes:

manufacture and/or repair of furniture, polishing and/or re-polishing of pianos or the manufacture and/or staining, spraying and polishing and/or repolishing of tea-room, office, church, school, bar or theatre furniture, and cabinets for musical instruments and radio or wireless cabinets and shall include the manufacture of processes in the manufacture of bedding the definition and interpretation of which shall include all manner or types of mattresses, spring-mattresses, overlays, pillows, bolsters and cushions, and including the activities carried on in any premises, where wood-machining, wood-turning and/or carving in connection with the production of furniture is carried on; and includes further the repairing, re-upholstering or re-polishing of furniture in or in connection with establishments in which the production of furniture or any operation associated with the final preparation of any article of furniture of sale, either in whole or in part, is carried on, and the veneering of laminated blockboard or plywood doors used for furniture, and all parts of materials used in the construction of furniture, but excludes the manufacture of articles made principally of wicker, grass and/or cane, and the manufacture of metal furniture, including the manufacture of metal bedsteads;

"learner" means an employee other than an apprentice, labourer, learner packer, or probationer who at the time of his engagement is or was a minor and who is employed in learning any class of work specified on his learnership certificate;

"Main Agreement" means any current agreement for the Furniture Manufacturing Industry, Eastern Cape Province, published in terms of section 48 of the Act, in which wages are prescribed, or in the absence of such an agreement, the last wage agreement published for the Industry in terms of the Act;

"member" means a person who has been duly admitted to membership of the Society in terms of clause 6;

"regulations" means the regulations made by the Medical Committee from time to time in accordance with the provisions of clause 25;

"sickness" includes diseases, and incapacity owing to injury;

"Society" means the Eastern Cape Furniture Workers' Sick Benefit Society established in terms of clause 4;

"wage" means the amount of money payable to an employee in terms of the Main Agreement in respect of his ordinary hours of work: Provided that, if an employer regularly pays an employee in respect of such ordinary hours of work an amount higher than that prescribed in the Main Agreement, it means such higher amount.

4. Establishment of Eastern Cape Furniture Workers' Sick Benefit Society

(1) There is hereby established a society known as the "Eastern Cape Furniture Workers' Sick Benefit Society", hereinafter referred to as the "Society".

(2) The Society shall consist of—

(a) money or other assets transferred to it from any other Sick Benefit Society;
(b) contributions in terms of clause 16;
(c) interest derived from the investment of any moneys of the Society; and
(d) any other moneys to which the Society may become entitled.

5. Objects

(1) The objects of the Society shall be to raise and maintain funds by subscriptions, contributions and donations for the purpose of providing members and their dependants, in accordance with the provisions of this Agreement and the regulations, with medical, surgical and ophthalmic attendance and treatment, medicines, dressings, comforts, hospital or nursing home treatment when free beds in a hospital, in terms of the relevant Provincial Ordinance, are unobtainable and, in the latter case, is one of urgency; to provide sick pay for members and such other benefits and assistance as may from time to time be determined by the Committee and to take measures for the prevention of sickness and for the improvement and promotion of health amongst members and their dependants.

(2) In connection with the attainment of the aforementioned objects the Society may—

(a) contract with, retain or employ such doctors, nurses, dispensers and other persons as it may consider desirable;
(b) establish and/or conduct any hospital, nursing home, convalescent home or the like or any surgery or dispensary for the care of members and their dependants;
(c) contract with any hospital, nursing home, convalescent home, or the like for the care of members and their dependants;

UNIVERSITY OF PRETORIA
Together in Excellence

(d) met 'n oogkundige, apteker of 'n ander persoon 'n kontrak aangaan vir die lewering van dienste, optiese benodigdhede, medisyne, verbande en verdowingsmiddels;

(e) enige ander organisasie of liggaam inlyf wat oor die algemeen of gedeeltelik dieselfde doelstellings as die Vereniging nastreef, en daarmee amalgameer of wederswyds daarmee saamwerk.

(3) Die Vereniging kan voorts al dié ander dinge doen wat voortvloei uit of bevorderlik is vir die verwesenliking van dié doelstelling of wat in verband staan met enigeen van die bevoegdhede of funksies in hierdie Ooreenkoms bedoel.

6. Lidmaatskap

(1) Lidmaatskap van die Vereniging sal bestaan uit werknemers wat lede is van óf die National Union of Furniture and Allied Workers of South Africa óf die National Association of Furniture and Allied Workers of South Africa.

(2) Ondanks enige ledegeld wat betaal mag gewees het, sal lidmaatskap van die Vereniging onmiddellik beëindig word sodra 'n lid sy lidmaatskap van enige van die vakverenigings in subklousule (1) genoem, beëindig.

7. Klagtes van Lede

(1) Alle klagtes teen die Komitee of 'n ampsdraer of werknemer daarvan moet aan die Raad gerig word, wat oor die bevoegdheid beskik om 'n beslissing te vel en wie se beslissing finaal is.

(2) Klagtes teen die mediese personeel moet by die Komitee ingedien word wat op sy beurt sodanige klagtes moet verwys na arbiters wat bestaan uit 'n mediese beampte van die Vereniging en 'n algemene praktisyn deur die Komitee aangestel, en genoemde arbiters moet oor sodanige klagtes aan die Komitee verslag doen.

8. Lede met Verlof

Lede wat met verlof van hul werk afwesig is gedurende die jaarlikse vakansietydperk is vir hul ledegeld ten opsigte van sodanige verloftyd aanspreeklik.

9. Pensioentrekkers en Weduwees

Lede wat na 20 jaar diens uit die Nywerheid aftree of weduwees van afgestorwe lede kan toegelaat word om nog in die bystand van die Vereniging te deel op dié voorwaardes wat die Komitee van tyd tot tyd in verband met bydraes tot die Vereniging of ander sake voorskryf.

10. Toelating van Afhanklikes

Ondergenoemde persone moet, op die voorwaardes hieronder gemeld, as afhanklikes van 'n lid toegelaat word:

(a) 'n Lid se vrou en 'n lid se kinders onder die ouderdom van 18 jaar (met inbegrip van wettig aangenome kinders) nadat dié bewys wat die Komitee vereis, gelewer is van hul algehele afhanklikheid van sodanige lid;

(b) enige ander persoon wat, na goeddunke van die Komitee, geheel en al van 'n lid afhanklik is:

Met dien verstande dat 'n persoon in *(b)* bedoel—

(i) nie as 'n afhanklike van 'n lid toegelaat mag word nie tensy sodanige persoon 'n mediese ondersoek tot tevredenheid van die Komitee deurgemaak het: Met dien verstande dat die Komitee na goeddunke, van hierdie vereiste kan afsien;

(ii) gedurende die eerste twee tydperke van 'n leerlingskap nie op toelating as 'n afhanklike van 'n leerling geregtig is nie;

(iii) wat 'n ouderdomspensioen of 'n ander pensioen ontvang en kinders onder die ouderdom van 18 jaar wat 'n inkomste van hoogstens R20,00 per maand het, na goeddunke van die Komitee as volle afhanklikes geag kan word;

(iv) gewoonlik by die betrokke lid moet inwoon: Met dien verstande dat die Komitee in spesiale gevalle en op dié voorwaardes wat hy van tyd tot tyd bepaal, persone wat nie aldus inwoon nie, as afhanklikes kan toelaat mits hulle in die Republiek woonagtig is.

11. Lidmaatskapkaarte

'n Kaart moet aan elke lid uitgereik word as bewys van lidmaatskap. Hierdie kaart moet op versoek getoon word aan enigeen wat ooreenkomstig hierdie Ooreenkoms diens lewer aan 'n lid of afhanklike waarvoor die Vereniging uitsluitlik of gedeeltelik aanspreeklik is.

Lidmaatskapkaarte moet binne sewe dae aan die sekretaris van die Komitee gestuur word vir die nodige byvoegings en skrappings in gevalle waar—

(a) 'n lid in die huwelik tree;

(b) 'n lid se vrou die lewe aan 'n kind skenk of 'n kind wettiglik deur 'n lid aangeneem word;

(c) 'n afhanklike te sterwe kom, die ouderdom van 18 jaar bereik of in die huwelik tree;

(d) contract with any optician, pharmacist or any other person for the supply of services, optical requirements, medicines, dressings and drugs;

(e) amalgamate or incorporate with or work in reciprocity with any other organisation or body having objects similar in whole or in part to those of the Society.

(3) The Society may further do all such other things as are incidental or conducive to the attainment of any object, or incidental to any of the powers or functions mentioned in this Agreement.

6. Membership

(1) Membership of the Society shall consist of employees who are members of either the National Union of Furniture and Allied Workers of South Africa or the National Association of Furniture and Allied Workers of South Africa.

(2) Membership of the Society shall terminate immediately a member terminates his membership of either the trade unions referred to in subclause (1) notwithstanding any subscriptions which may have been paid.

7. Members' Complaints

(1) Any complaint against the Committee or any official or servant thereof shall be made to the Council, who shall have the power to adjudicate, and whose ruling shall be final.

(2) Complaints against medical personnel shall be lodged with the Committee, which in turn shall refer the said complaints to referees consisting of a medical officer of the Society and a general practitioner appointed by the Committee who shall report thereon to the Committee.

8. Members on Leave

Members on leave from their employment during the annual holiday period shall be liable for subscriptions in respect of such leave period.

9. Pensioners and Widows

Members who retire from the Industry after 20 years of service or widows of deceased members may be permitted to continue to participate in the benefits of the Society, on such terms and conditions as to contributions to the Society and otherwise as the Committee may from time to time prescribe.

10. Admission of Dependants

The following persons shall, on the conditions set out hereunder, be admitted as dependants of a member:

(a) A member's wife, and a member's children under the age of 18 years (including legally adopted children) subject to such proof as the Committee may require of their being wholly dependant on such member;

(b) any other person who, at the discretion of the Committee, is wholly dependent on a member;

Provided that a person referred to in *(b)*—

(i) shall not be admitted as a dependant of any member unless such person has passed a medical examination to the satisfaction of the Committee: Provided that the Committee may, in its discretion, dispense with this requirement;

(ii) shall not be entitled to admission as a dependant of a learner during the first two periods of learnership;

(iii) who is in receipt of old age or any other pension, and children under the age of 18 years who are in receipt of an income of R20,00 per month or less may, at the discretion of the Committee, be considered as wholly dependant;

(iv) shall normally reside with the member concerned: Provided that in special cases the Committee may, on such conditions as it may lay down from time to time, admit as dependants persons not so resident, provided they are resident in the Republic.

11. Membership Cards

A card shall be issued to every member as evidence of membership. This card must be produced, upon request, to any person rendering services to a member or dependant in terms of the provisions of this Agreement for which the Society may be liable in whole or in part.

Membership cards must be forwarded within seven days to the Secretary of the Committee for the necessary additions and deletion in the case of—

(a) the marriage of a member;

(b) the birth of a child to a member's wife or the legal adoption of a child by a member;

(c) the death, the attainment of 18 years of age, or the marriage of a dependant;

IN LUMINE TUO VIDEBIMUS LUMEN
Together in Excellence

CONT

IN LUMINE TUO VIDEBIMUS LUMEN
University of Fort Hare
Together in Excellence

(d) 'n afhanklike 'n loon of pensioen van meer as R20,00 per maand ontvang;
(e) die ledegeld verander word;
(f) die adres verander word;
(g) die paneeldokter verander word;
(h) die lidmaatskapnommer verander word.

In die geval van *(a)* of *(b)* moet die huwelik- of geboortesertifikaat en/of bewys van wettige aanneming voorgelê word.

Lidmaatskapkaarte word aanvanklik gratis uitgereik, maar waar 'n kaart verloor word, moet die betrokke lid 'n bedrag van 10c vir die vervanging daarvan aan die Vereniging betaal.

Nuwe lidmaatskapkaarte kan van tyd tot tyd, na goeddunke van die Komitee, uitgereik word.

Lidmaatskapkaarte bly te alle tye die eiendom van die Vereniging en moet by beëindiging van lidmaatskap aan die Vereniging terugbesorg word.

12. Bystand

(1) 'n Lid en sy afhanklikes is, behoudens die regulasies, op die volgende bystand geregtig:

(a) Mediese behandeling (uitgesonderd dié in verband met bevallings of komplikasies wat daaruit ontstaan);
(b) dienste van spesialiste (uitgesonderd verloskunde), op aanbeveling van die mediese beampte wat deur die Komitee aangestel is;
(c) operasies deur die Vereniging se mediese beamptes of met hul toestemming uitgevoer, uitgesonderd operasies in klousule 14 bedoel;
(d) mediese wonddekkings en dié medisyne en/of verdowingsmiddels soos die Komitee besluit: Met dien verstande dat die lid 25 persent van die totale koste van sodanige medisyne en verdowingsmiddels moet betaal;
(e) optiese dienste: Met dien verstande dat die lid 25 persent van die totale koste van sodanige dienste moet betaal en dat die totale bedrag van die bystand hoogstens R75,00 in 'n bepaalde jaar van lidmaatskap mag beloop;
(f) na volstrekte goeddunke van die Komitee, 'n *ex gratia*-bydrae tot mediese koste—
  (i) terwyl op reis in 'n provinsie van die Republiek; of
  (ii) terwyl tydelik woonagtig in 'n ander gebied as die gebied waar hy gewoonlik woonagtig is;
(g) akkommodasie in 'n hospitaal of verpleeginrigting (wanneer dit 'n dringende geval is en vry beddens in 'n hospitaal nie verkrygbaar is nie);
(h) dié ander dienste wat die Komitee van tyd tot tyd invoer;
(i) siektebesoldiging, slegs in die geval van 'n lid ingevolge klousule 13 van hierdie Ooreenkoms: Met dien verstande dat lede en hul afhanklikes nie op die bystand waarvoor daar in hierdie Ooreenkoms voorsiening gemaak word, geregtig is nie voordat sodanige lede minstens 13 weke se bydraes aan die Vereniging betaal het en/of nie meer as vier weke met hul bydraes agterstallig is nie;
(j) tandheelkundige dienste: Met dien verstande dat die lid 25 persent van die totale koste van sodanige dienste moet betaal en dat die totale bedrag van die bystand hoogstens R100,00 in 'n bepaalde jaar van lidmaatskap mag beloop.

(2) Die totale bedrag wat in die vorm van bystand in 'n bepaalde jaar van lidmaatskap aan 'n lid en sy afhanklikes betaalbaar is, uitgesonderd siektebesoldiging, mag nie die volgende te bowe gaan nie: hoogstens R500,00.

(3) Ondanks andersluidende bepalings in hierdie Ooreenkoms, word lede wat op die datum van inwerkingtreding van die Ooreenkoms minstens 13 weeklikse bydraes ingevolge enige vorige ooreenkoms aan die Vereniging betaal het, onmiddellik geregtig op die bystand in hierdie Ooreenkoms voorgeskryf.

13 Siektebesoldiging

(1) 'n Lid wat weens siekte verplig is om minstens twee agtereenvolgende werkdae van die werk af weg te bly, is, behoudens klousule 12, gedurende enige 12 kalendermaande geregtig op siektebesoldiging teen die volgende skale:

	Gedurende die eerste vyf weke afwesigheid	Gedurende die volgende drie weke afwesigheid
	Per week R	Per week R
(a) In die geval van 'n lid wat R1,40 per week bydra	15,00	9,00
(b) In die geval van 'n lid wat R1,60 per week bydra	30,00	24,00

(d) a dependant becoming the recipient of a wage or pension exceeding R20,00 per month;
(e) a change of rate of subscription;
(f) a change of address;
(g) a change of panel doctor;
(h) a change of membership number.

In the case of *(a)* or *(b)* the marriage or birth certificate and/or evidence of legal adoption must be produced.

Membership cards shall be issued free in the first instance but if a card is lost, a fee of 10c shall be paid to the Society by the member concerned for its replacement.

A new issue of membership cards may be made from time to time at the discretion of the Committee.

Membership cards remain the property of the Society at all times and must be surrendered to the Society on termination of membership.

12. Benefits

(1) A member and his dependants shall, subject to the regulations, be entitled to the following benefits:

(a) Medical attendance (excluding confinements or complications arising therefrom);
(b) specialists' services (excluding obstetrics), on the recommendation of the medical officer appointed by the Committee;
(c) operations performed by the Society's medical officers or with their approval, excluding operations referred to in clause 14;
(d) medical dressings and such medicines and/or drugs as may be decided upon by the Committee: Provided that the member shall pay 25 percent of the total cost of such medicines and drugs;
(e) optical services: Provided that the member shall pay 25 percent of the total cost of such services and that the total amount of the benefits shall not exceed R75,00 in any one year of membership;
(f) at the entire discretion of the Committee, an *ex gratia* contribution towards medical expenses—
  (i) whilst journeying in any province of the Republic; or
  (ii) whilst temporarily resident in an area other than the area where he is usually resident;
(g) hospital and nursing home accommodation (when the case is one of urgency and free beds in a hospital are unobtainable);
(h) such other services as may from time to time be introduced by the Committee;
(i) sick pay, in the case of a member only, in terms of clause 13 of this Agreement: Provided that members and their dependants shall not become entitled to any of the benefits provided for in this Agreement until such members have contributed not less than 13 weeks' contributions to the Society and/or are not more than four weeks in arrear with their subscriptions;
(j) dental services: Provided that the member shall pay 25 percent of the total cost of such services and that the total amount of the benefits shall not exceed R100,00 in any one year of membership.

(2) The total amount of benefits, excluding sick pay, payable to a member and his dependants in any one year of membership, shall not exceed R500,00.

(3) Notwithstanding anything to the contrary contained in this Agreement, members who have made at least 13 weekly contributions to the Society, in terms of any previous agreement, as at the date of coming into operation of the Agreement, shall immediately become entitled to the benefits prescribed in this Agreement.

13. Sick Pay

(1) A member who through sickness is compelled to absent himself from work for a period of not less than two consecutive working days, shall, subject to the provisions of clause 12, be entitled to sick pay at the following rates during any 12 calendar months:

	During the first five weeks of absence	During the next three weeks of absence
	Per week R	Per week R
(a) In the case of a member contributing R1,40 per week	15,00	9,00
(b) In the case of a member contributing R1,60 per week	30,00	24,00

Vir die toepassing van hierdie klousule, moet 12 kalendermaande bereken word vanaf die datum ten opsigte waarvan 'n lid in 'n bepaalde jaar vir die eerste keer siektebesoldiging ontvang tot dieselfde datum in die daaropvolgende jaar.

(2) 'n Lid ten opsigte van wie daar aangeteken word dat hy weens siekte van die werk afwesig is, mag, uitgesonderd in dié omstandighede soos die Komitee bepaal, geen siektebesoldiging ontvang vir enige week waarin hy lonende werk verrig nie, afgesien van die duur van sodanige werk.

(3) Die Komitee het die bevoegdheid om te verklaar dat die Vereniging nie meer aanspreeklik is vir die behandeling van 'n chroniese siekte waaraan 'n lid of sy afhanklike ly nie, en om die betaling van bystand op te skort ten opsigte van werklose lede wat 13 weke lank nie tot die Vereniging bygedra het nie.

14. Beperking van Bystand

Behoudens klousules 12 en 13 van hierdie Ooreenkoms, is die Vereniging nie aanspreeklik vir die dienste wat lede en hul afhanklikes in verband met enigeen van die volgende aangeleenthede nodig het nie:

(a) Siekte wat ontstaan uit wanordelike gedrag, wangedrag of oormatige gebruik van sterk drank, dwelmmiddels, ens.;
(b) voortduring van siekte in gevalle waar 'n lid of sy afhanklike weier om 'n redelike opdrag of aanbeveling van sy geneesheer na te kom;
(c) besering as gevolg van 'n ongeluk of 'n opsetlike besering wat, na die mening van die Komitee, nie teen die Vereniging in rekening gebring behoort te word nie, of 'n besering as gevolg van 'n ongeluk of 'n opsetlike besering waarvoor 'n derde party aanspreeklik is om vergoeding te betaal en dit wel betaal, of wat deur versekering gedek is, naamlik tot die bedrag van sodanige vergoeding of dekking, na gelang van die geval;
(d) beserings of beroepsiektes opgedoen terwyl 'n lid in diens was, naamlik in die mate waarin 'n werkgewer behandeling verskaf;
(e) siekte terwyl militêre diens ondergaan word of waarvoor die militêre owerheid aanspreeklikheid aanvaar het;
(f) operasies volgens eie keuse;
(g) die verskaffing van patente medisyne en dié antibiotika wat die Komitee bepaal;
(h) spesiale behandeling wat aanbeveel word deur ander persone as 'n geregistreerde mediese praktisyn;
(i) kraam- en/of verloskundige gevalle en/of die gevolge daarvan;
(j) geestessiektes;
(k) veneriese siekte;
(l) hartoperasies wat, na die mening van die Komitee, onredelike uitgawes vir die Vereniging sal meebring;
(m) rekenings wat na verloop van meer as vier maande vanaf die datum waarop sodanige aanspreeklikheid aangegaan is, vir betaling voorgelê word.

15. Mediese Behandeling

Die Komitee kan te enigeer tyd vereis dat 'n lid of enigeen van sy afhanklikes op koste van die Vereniging medies ondersoek word deur 'n dokter wat hy mag benoem.

16. Bydraes

(1) Mits geen bedrag afgetrek word van die loon van 'n lid wat gedurende die week waarin die aftrekkings verskuldig geword het minder as 16 uur gewerk het nie, moet elke werkgewer op die eerste betaaldag na die datum waarop hierdie Ooreenkoms in werking tree en daarna op elke betaaldag, bydraes teen die volgende skale aftrek van die loon van elke lid in sy diens:

	R *Per week*
Werknemers wat 'n loon van meer as R40,00 per week ontvang:	1,60
Werknemers wat 'n loon van hoogstens R40,00 per week ontvang:	1,40

(2) Vir die toepassing van hierdie klousule word die voorgeskrewe loon van 'n vakleerling geag die loon te wees waarop hy ingevolge die bepalings van sy leerlingskontrak geregtig is.

(3) By die bedrag afgetrek, moet die werkgewer 'n gelyke bedrag voeg en die totale bedrag voor of op die sewende dag van die maand wat volg op die maand waarin die bedrae afgetrek is, tesame met die staat waarop die Mediese Komitee van tyd tot tyd besluit, aan die Sekretaris, Posbus 2221, Port Elizabeth, 6000, stuur.

(4) Indien 'n werkgewer versuim om die vereiste bedrae van 'n werknemer se loon af te trek op die datum waarop dit verskuldig is, moet die Mediese Komitee besluit of en hoe die agterstallige bedrag of bedrae op die werknemer verhaal moet word, en die werkgewer mag nie die werknemer se agterstallige bydraes op enige ander manier ver-

For the purposes of this clause, 12 calendar months shall be calculated from the date in respect of which a member first draws sick pay in any year to the same date in the next succeeding year.

(2) A member who is recorded as being absent from work through sickness shall, except in such circumstances as may be determined by the Committee, receive no sick pay for any week during which he performs remunerative work, irrespective of the duration of such work.

(3) The Committee shall have the power to declare the treatment of chronic ailment from which a member or dependant is suffering to be no longer a liability of the Society and to suspend benefits in respect of unemployed members who have not contributed to the Society for a period of 13 weeks.

14. Limitation of Benefits

Without prejudice to the provisions of clauses 12 and 13 of this Agreement, service required by members and their dependants in connection with any of the following shall not be a liability of the Society:

(a) Any sickness arising out of disorderly behaviour, misconduct, or indulgence in intoxicating liquor, drugs or the like;
(b) continuation of sickness in cases where a member or dependant refuses to observe any reasonable instruction or recommendation of his medical attendant;
(c) any accidental or wilful injury which, in the opinion of the Committee, should not be a charge upon the Society or any accidental or wilful injury for which a third party is liable to pay, and does pay, compensation, or which is covered by insurance, to the extent of such compensation or cover, as the case may be;
(d) injuries received or occupational diseases contracted by a member whilst on duty, to the extent to which an employer provides for treatment;
(e) sickness whilst on military service or for which the military authorities have accepted responsibility;
(f) operations of choice;
(g) the supply of patent medicines and such antibiotics as may be determined by the Committee;
(h) special treatments recommended by persons other than a registered medical practitioner;
(i) maternity and/or obstetrical cases and/or sequela;
(j) mental ailments;
(k) venereal disease;
(l) heart operations which, in the opinion of the Committee, will involve the Society in unreasonable expense;
(m) accounts submitted for payment more than four months after the date on which such liabilities were incurred.

15. Medical Treatment

The Committee may at any time require a member or any of his dependants to undergo a medical examination at the Society's expense by any doctor which it may nominate.

16. Contributions

(1) Provided that no deduction shall be made from the wages of a member who has worked less than 16 hours in the week in which the deductions fall due, every employer shall, on the first pay-day after the date upon which this Agreement comes into operation and thereafter on every pay-day, deduct from the wage of each and every member in his employ contributions at the following rates:

	R *Per week*
Employees in receipt of a wage in excess of R40,00 per week	1,60
Employees in receipt of a wage not exceeding R40,00 per week	1,40

(2) For the purposes of this clause, the prescribed wage of an apprentice shall be deemed to be the wage to which he is entitled in terms of his contract of apprenticeship.

(3) To the amount deducted the employer shall add an equal amount and forward, by not later than the seventh day of the month following the month during which the deductions are made, the total sum to the Secretary, P.O. Box 2221, Port Elizabeth, 6000, together with such statement as the Medical Committee may from time to time determine.

(4) Should an employer fail to make the required deductions from an employee's wages on the due date, the Medical Committee shall determine how or whether the arears shall be recovered from the employee and the employer shall not be entitled to recover the employee's arrear contributions in any other manner than that determined by the Com-

haal nie as dié wat die Komitee bepaal, maar die werkgewer is nogtans verplig om sy bydraes ooreenkomstig hierdie Ooreenkoms te betaal.

(5) Indien bydraes per abuis aan die Vereniging betaal word, is die Vereniging na verloop van ses maande vanaf die datum van sodanige betaling nie verplig om sodanige bydrae terug te betaal nie.

(6) Wanneer bystand per abuis aan 'n lid betaal is as gevolg van die feit dat sodanige lid bedrae aan die Vereniging betaal het wat nie verskuldig was nie, kan die Mediese Komitee die bedrag van die bystand wat aldus betaal is, in mindering bring teen—

(a) enige bedrag wat as 'n terugbetaling van sodanige bydraes wat nie verskuldig was nie, van die Vereniging geëis word; en

(b) toekomstige bystand wat deur die Vereniging aan genoemde lid verskuldig word.

17. Bestuur

(1) Behoudens die gesag van die Raad, berus die administrasie en beheer van die Vereniging by die Mediese Komitee.

(2) Die Komitee bestaan uit vier verteenwoordigers deur die Raad aangestel (waarvan twee werkgeweverteenwoordigers en twee werknemerverteenwoordigers moet wees) en die Voorsitter en Ondervoorsitter van die Raad, wat *ipso facto* onderskeidelik die Voorsitter en die Ondervoorsitter van die Komitee is.

(3) Die Raad moet plaasvervangers vir die hoofverteenwoordigers aanstel.

(4) Verteenwoordigers en plaasvervangers het 'n ampstermyn van 12 maande, waarna hulle herkiesbaar is.

18. Bevoegdhede en Pligte van die Komitee

Die Komitee besluit oor die beleid van die Vereniging en administreer die algemene sake en werksaamhede van die Vereniging ooreenkomstig hierdie Ooreenkoms, en waar hy dit doen, moet die Komitee al die stappe doen wat hy nodig ag of wat na sy mening bevordertlik is vir of wat sal help met die verwesenliking van sodanige doelstelling. In die besonder kan die Komitee—

(a) van tyd tot tyd dié geld van die Vereniging belê wat nie onmiddellik vir die nakoming van die verpligtings van die Vereniging nodig is nie: Met dien verstande dat dié geld slegs belê mag word in—

(i) spaarrekenings, permanente aandele of vaste deposito's by geregistreerde bouverenigings of banke;

(ii) posspaarbankrekenings;

(iii) effekte van die Regering van die Republiek van Suid-Afrika, van plaaslike besture en/of van die Elektrisiteitsvoorsieningskommissie;

(iv) Nasionale Spaarsertifikate; of

(v) op 'n ander manier wat deur die Registrateur goedgekeur word;

(b) bates van die Vereniging te gelde maak, verkoop of op 'n ander manier van die hand sit of daarmee handel;

(c) behoudens die goedkeuring van die Raad, daarbenewens—

(i) enige lid as lid van die Vereniging skrap indien hy skriftelik om sodanige skrapping aansoek doen of indien dit in die Vereniging se belang is;

(ii) enige lid van dié bepalings van hierdie Ooreenkoms vrystel wat op sodanige lid van toepassing is.

19. Vergaderings van die Komitee

(1) Die Komitee moet byeenkom wanneer dit nodig is, maar minstens twee maal per jaar en wel op dié datums wat hy bepaal. 'n Spesiale vergadering moet belê word wanneer minstens drie verteenwoordigers daarom versoek en kan ook na goeddunke van die Voorsitter belê word.

(2) Die Sekretaris moet minstens twee dae voor die datum van 'n vergadering skriftelik kennis gee van sodanige vergadering van die Komitee en die sake meld wat afgehandel moet word: Met dien verstande dat, in die geval van 'n spesiale vergadering, die Voorsitter magtiging kan verleen om korter kennis te gee.

(3) Die kworum vir vergaderings van die Komitee is twee werkgeweverteenwoordigers en twee werknemerverteenwoordigers.

(4) Waar die Voorsitter en die Ondervoorsitter nie op 'n vergadering teenwoordig is nie, moet die Komitee uit sy geledere 'n voorsitter vir daardie vergadering kies.

20. Besoldiging van Mediese Komitee

Die Komitee mag, onderworpe aan die goedkeuring van die bedrag deur die Raad, die bedrag bepaal wat aan verteenwoordigers betaal moet word om vergaderings by te woon, en verteenwoordigers is daarop geregtig om vergoed te word vir die werklike lone wat hulle verloor het deurdat hulle die sake van die Vereniging behartig het of deurdat hulle op versoek van die Komitee siek lede of hul afhanklikes besoek het, en is daarbenewens geregtig op terugbetaling van redelike kontant uitgawes.

mittee, but shall nevertheless be liable to make his own contributions in accordance with the provisions of this Agreement.

(5) If any contribution is made in error to the Society, the Society shall not be liable to repay that contribution after the lapse of six months from the date of such payment.

(6) Whenever any benefit has been mistakenly paid to a member as a result of such member having made to the Society payments which were not due, the Medical Committee may set off the amount of benefit so paid—

(a) against any sum claimed from the Society as a repayment of such contributions which were not due; and

(b) against any future benefits that may become due by the Society to the said member.

17 Management

(1) The administration and control of the Society shall, subject to the authority of the Council, be vested in the Medical Committee.

(2) The Committee shall consist of four representatives appointed by the Council (two of whom shall be employer representatives and two employee representatives) and the Chairman and Vice-Chairman of the Council who shall *ipso facto* be the Chairman and Vice-Chairman of the Committee respectively.

(3) The Council shall appoint alternates to the principal representatives.

(4) Representatives and alternates shall hold office for a period of 12 months, whereafter they shall be eligible for re-appointment.

18. Powers and Duties of the Committee

The Committee shall direct the policy of the Society and administer the general business and activities of the Society in accordance with the provisions of this Agreement, and, in so doing, the Committee shall take all such steps as it may deem necessary, or which it considers will be conducive towards or will assist in the attainment of such object. In particular, the Committee may—

(a) from time to time invest so much of the moneys of the Society as are not immediately required to meet the obligations of the Society: Provided that such moneys shall not be invested otherwise than in—

(i) savings accounts, permanent shares or fixed deposits with registered building societies or banks;

(ii) post office savings accounts;

(iii) stock of the Government of the Republic of South Africa, Local Government Stock and/or the Electricity Supply Commission;

(iv) National Savings Certificates; or

(v) in any other manner approved by the Registrar;

(b) realise, sell or otherwise dispose of or deal with any of the assets of the Society;

(c) subject to the approval of the Council, in addition—

(i) remove any member from membership of the Society—if he applies in writing for such removal; or if it is in the interests of the Society;

(ii) exempt any member from such provisions of this Agreement as may be applicable to such member.

19. Meetings of Committee

(1) The Committee shall meet as and when necessary, but not less than twice a year, upon such dates as it may determine. A special meeting shall be called upon requisition of not less than three representatives and may also be called at the discretion of the Chairman.

(2) Notice of any meeting of the Committee showing the business to be transacted shall be given by the Secretary in writing, at least two days before the date of such meeting: Provided that, in the case of a special meeting, the Chairman may authorise the giving of shorter notice.

(3) The quorum for meetings of the Committee shall be two employer representatives and two employee representatives.

(4) At any meeting at which the Chairman and Vice-Chairman are absent, the Committee shall elect one of their number to the chair for that meeting.

20. Remuneration of Medical Committee

The Committee may, subject to the Council approving the amount, fix the sum to be paid to representatives for attending meetings, and representatives shall be entitled to reimbursal of actual wages in the event of time lost by transacting the business on behalf of the Society, or by visiting the sick members or their dependants at the instance of the Committee and may, in addition, be entitled to reasonable out-of-pocket expenses.

University of Pretoria
Together in Excellence

21. Ontruiming van Setels deur Komiteelede

'n Verteenwoordiger of plaasvervanger van die Komitee se setel word ontruim indien hy—

(a) te sterwe kom;
(b) as kranksinnig gesertifiseer word;
(c) as lid van die Komitee bedank.

Wanneer die setel van 'n verteenwoordiger of sy plaasvervanger vakant raak om een van die redes hierbo genoem, moet die Komitee onmiddellik 'n ander verteenwoordiger of plaasvervanger, na gelang van die geval, aanstel om die vakature te vul.

22. Sekretaris

Die Sekretaris van die Vereniging moet deur die Komitee aangestel word in òf 'n erehoedanigheid òf 'n besoldigde hoedanigheid.

23. Finansiële Beheer

(1) 'n Bankrekening moet op naam van die Vereniging geopen word. Die Komitee het die bevoegdheid om dié ander bankrekenings te open wat hy van tyd tot tyd nodig ag en om daarop te werk en hy moet die persone aanwys wat gemagtig is om op enigeen van die Vereniging se bankrekenings te werk.

(2) Alle geld wat aan die Vereniging betaal word, moet sonder korting in een van die Vereniging se bankrekenings gestort word.

(3) Alle uitgawes in verband met die administrasie van die Vereniging kom ten laste van die Vereniging.

(4) Die boekjaar van die Vereniging sluit op 31 Desember elke jaar.

(5) Die Vereniging moet so gou moontlik na 31 Desember elke jaar 'n staat van alle inkomste en uitgawes van die Vereniging en 'n balansstaat opstel wat sy bates en laste ten opsigte van die 12 maande geëindig 31 Desember aantoon, en sodanige staat en balansstaat moet deur 'n openbare rekenmeester onderteken en deur die Voorsitter van die Vereniging medeonderteken en saam met 'n verslag daaroor deur die openbare rekenmeester, aan die Raad voorgelê word.

(6) Die geouditeerde staat en balansstaat moet daarna op die kantoor van die Raad ter insae lê en kopieë daarvan moet binne drie maande na verstryking van die tydperk waaroor dit handel, aan die Direkteur-generaal: Mannekragbenutting, Pretoria, voorgelê word.

24. Vrywaring

Die lede van die Komitee en die beamptes en werknemers van die Vereniging is en word hierby deur die Vereniging gevrywaar teen alle verliese gely of uitgawes aangegaan in verband met die *bona fide*-uitvoering van hul pligte.

25. Regulasies

(1) Die Komitee het die bevoegdheid om, vir die doeltreffende uitvoering van die Vereniging se doelstellings, die regulasies wat nie met hierdie Ooreenkoms of met 'n ander wet onbestaanbaar moet wees nie, te maak, te wysig en te herroep, en om die omvang te bepaal van die bystand wat die Vereniging moet verleen en die voorwaardes wat daarop van toepassing is.

(2) 'n Kopie van die regulasies asook van alle wysigings van die regulasies kan aan elke lid van die Vereniging uitgereik word en moet aan die Direkteur-generaal: Mannekragbenutting verstrek word.

26. Vrystellings

(1) Die Raad kan om 'n afdoende rede vrystelling van enigeen van die bepalings van hierdie Ooreenkoms verleen.

(2) Die Raad moet ten opsigte van 'n persoon aan wie vrystelling verleen word, die voorwaardes vaastel waarop sodanige vrystelling verleen word en die tydperk waarvoor sodanige vrystelling geldig is: Met dien verstande dat die Raad na goeddunke en nadat een week vooraf aan die betrokke persoon skriftelik kennis gegee is, 'n vrystellingsertifikaat kan intrek.

(3) Die Sekretaris van die Raad moet aan elke persoon aan wie vrystelling verleen is, 'n sertifikaat uitreik wat deur die Voorsitter en die Sekretaris van die Raad onderteken is en waarin die volgende vermeld word:

(a) Die naam van die betrokke persoon voluit;
(b) die bepalings van die Ooreenkoms waarvan vrystelling verleen word;
(c) die voorwaardes wat ingevolge subklousule (2) van hierdie klousule vasgestel is waarop dié vrystelling verleen word;
(d) die tydperk waarvoor die vrystelling geldig is; en
(e) die rede waarom die vrystelling verleen word.

(4) Die Sekretaris van die Raad moet—

(a) alle sertifikate wat uitgereik word, in volgorde nommer;
(b) 'n afskrif hou van elke sertifikaat wat uitgereik word;
(c) 'n afskrif van die sertifikaat aan die betrokke werkgewer uitreik.

21. Vacation of Seats by Committee Members

A representative or an alternate of the Committee shall vacate his seat if he—

(a) dies;
(b) is certified insane;
(c) resigns from the Committee.

When the seat of a representative or his alternate becomes vacant for one of the reasons mentioned above, the Committee shall forthwith appoint another representative or alternate, as the case may be, to fill the vacancy.

22. Secretary

The Secretary of the Society shall be appointed by the Committee, either in an honorary or paid capacity.

23. Financial Control

(1) A banking account shall be opened in the name of the Society. The Committee shall have the power to open and operate such other banking accounts as it may deem necessary from time to time and shall designate the persons authorised to operate upon any of the Society's banking accounts.

(2) All moneys paid to the Society shall be paid into one of the Society's banking accounts without abatement.

(3) All expenses incurred in connection with the administration of the Society shall be a charge against the Society.

(4) The financial year of the Society shall end on 31 December of each year.

(5) As soon as possible after 31 December of each year the Society shall prepare a statement of all revenue and expenditure of the Society, and a balance sheet showing the assets and liabilities in respect of the period of 12 months ended 31 December, which shall be certified by a public accountant and counter-signed by the Chairman of the Society and submitted together with any report by the public accountant thereon to the Council.

(6) The audited statement and balance sheet shall thereafter lie for inspection at the office of the Council and copies thereof shall, within three months of the close of the period covered thereby, be submitted to the Director-General: Manpower Utilisation, Pretoria.

24. Indemnity

The members of the Committee and officers and employees of the Society shall be and are hereby indemnified by the Society against all losses or expenses incurred by them in or about the bona fide discharge of their duties.

25. Regulations

(1) The Committee shall have the power to make, vary and repeal regulations not inconsistent with the provisions of this Agreement or any other law for the efficient carrying out of the Society's object, and for determining the extent of the benefits to be granted by the Society and the terms and conditions applicable thereto.

(2) A copy of the regulations may be issued to every member of the Society, and shall be furnished to the Director-General: Manpower Utilisation as well as copies of any amendments thereto.

26. Exemptions

(1) The Council may grant exemption from any of the provisions of the Agreement for any good and sufficient reason.

(2) The Council shall fix, in respect of any person granted exemption, the conditions subject to which such exemption is granted and the period during which such exemption shall operate: Provided that the Council may, if it deems fit, after one week's notice, in writing, has been given to the person concerned, withdraw any licence of exemption.

(3) The Secretary of the Council shall issue to every person granted exemption a licence signed by the Chairman and Secretary of the Council setting out—

(a) the full name of the person concerned;
(b) the provisions of the Agreement from which exemption is granted;
(c) the conditions fixed in accordance with the provisions of subclause (2) of this clause subject to which such exemption is granted;
(d) the period for which the exemption shall operate; and
(e) the reason for the exemption being granted.

(4) The Secretary of the Council shall—

(a) number consecutively all licences issued;
(b) retain a copy of each licence issued; and
(c) forward a copy of the licence to the employer concerned.

University of Pretoria
Together in Excellence

27. Agente

(1) Die Raad moet een of meer aangewese persone as agente aanstel om by die toepassing van hierdie Ooreenkoms behulpsaam te wees.

Die agent het die reg om—

(a) enige perseel of plek waar die Meubelnywerheid beoefen word, te betree, te inspekteer en te ondersoek te eniger tyd wanneer hy redelike gronde het om te glo dat iemand daarin werksaam is;

(b) elke werknemer wat hy op of in die omgewing van die perseel of plek vind, na goeddunke, alleen of in teenwoordigheid van ander persone, mondeling te ondervra met betrekking tot sake aangaande hierdie Ooreenkoms en van hom te vereis om die vrae wat gestel word, te beantwoord;

(c) te eis dat alle kennisgewings, boeke, lyste of dokumente wat ingevolge hierdie Ooreenkoms bygehou, vertoon of opgestel moet word, getoon word en om dit te ondersoek en 'n afskrif daarvan te maak.

(2) Wanneer die agent so 'n plek betree, inspekteer of ondersoek, kan hy 'n tolk met hom saamneem.

(3) Elke persoon vir wie hierdie Ooreenkoms bindend is, moet die agent al genoemde fasiliteite verleen.

28. Sterftebystandsfonds

Die Komitee kan ten opsigte van elke lid wat nog nie die ouderdom van 60 jaar bereik het nie, 'n bedrag van hoogstens 16c per week van die totaal van sodanige lid se bydraes en die werkgewer se bydraes tot die Fonds gebruik vir die doel om sterftebystand te verskaf.

29. Ontbinding van die Vereniging

(1) Ingeval hierdie Ooreenkoms weens verloop van tyd verstryk of om 'n ander rede gestaak word en daar nie binne 12 maande vanaf die datum van verstryking van hierdie Ooreenkoms 'n daaropvolgende ooreenkoms aangegaan word met die doel om die Vereniging te laat bly voortbestaan nie, moet die Komitee die Vereniging likwideer, en indien enige bedrag oorbly nadat al die bates van die Vereniging te gelde gemaak is en na betaling van alle krediteure, laste en skulde van die Vereniging, moet die Raad die saldo aan geld, as daar is, in die volgende verhouding toewys:

(a) 50 dele aan die vakverenigings wat in die Raad verteenwoordig is, en dié bedrag moet tussen sodanige vakverenigings verdeel word in verhouding tot die getal volwaardige lede van elke vakvereniging op die datum van likwidasie: Met dien verstande dat die uitdrukking „lede" beperk is tot dié lede wat deur die Ooreenkoms gedek was;

(b) 50 dele aan die werkgewersorganisasies wat in die Raad verteenwoordig is in verhouding tot die getal volwaardige lede ingevolge die Wet in elke sodanige organisasie op die datum van likwidasie: Met dien verstande dat die uitdrukking „lede" beperk is tot dié lede wat deur die Ooreenkoms gedek was.

(2) Ingeval die Raad ontbind word of ingeval dit ophou om te funksioneer gedurende enige tydperk wat hierdie Ooreenkoms ingevolge artikel 34 (2) van die Wet bindend is, moet die Komitee of die ander persone wat die Registrateur ingevolge daardie subartikel aanwys, voortgaan om die Vereniging te administreer. Vakatures wat in die Komitee ontstaan, kan deur die Registrateur gevul word uit die geledere van werkgewers en werknemers, na gelang van die geval, ten einde te verseker dat die getal werkgewer- en werknemerverteenwoordigers in die Komitee ewe groot is.

(3) Ingeval die Komitee nie daartoe in staat is nie of onwillig is om sy pligte uit te voer of ingeval hy voor 'n dooie punt te staan kom wat na die mening van die Registrateur die administrasie van die Vereniging ondoenlik of onwenslik maak, kan die Registrateur iemand aanstel wat onmiddellik twee of meer persone moet koöpteer, van wie een 'n lid van die Vereniging of 'n besoldigde beampte van een van die vakverenigings is en die ander een 'n lid van die werkgewersorganisasie of 'n besoldigde beampte daarvan, en hierdie persone is tesame die trustees wat oor al die bevoegdhede, regte en pligte van die Komitee beskik. Ingeval daar geen Raad bestaan nie, moet die Vereniging by die verstryking van die Ooreenkoms deur die Komitee of trustees, na gelang van die geval, gelikwideer word en moet die saldo aan geld, as daar is, in die volgende verhouding toegewys word:

(a) 50 dele aan die vakverenigings wat in die Raad verteenwoordig is, en dié bedrag moet tussen sodanige vakverenigings verdeel word in verhouding tot die getal volwaardige lede van elke vakvereniging op die datum van likwidasie: Met dien verstande dat die uitdrukking „lede" beperk is tot dié lede wat deur die Ooreenkoms gedek was;

(b) 50 dele aan die werkgewersorganisasies wat in die Raad verteenwoordig is, in verhouding tot die getal volwaardige lede ingevolge die Wet in elke sodanige organisasie op die datum van likwidasie: Met dien verstande dat die uitdrukking „lede" beperk is tot dié lede wat deur die Ooreenkoms gedek was.

(4) Indien die Komitee redelike grond het om die Vereniging te ont-

27. Agents

(1) The Council shall appoint one or more specified persons as agents to assist in giving effect to the terms of this Agreement.

The agent shall have the right to—

(a) enter, inspect and examine any premises or place in which the Furniture Industry is carried on at any time when he has reasonable cause to believe that any person is employed therein;

(b) orally examine, either alone or in the presence of any other person, as he thinks fit, with respect to matters relating to this Agreement, every employee whom he finds in or about the premises or place and require such employees to answer the questions put;

(c) require the production of any notice, book, list or document which is by this Agreement required to be kept, exhibited or made, and to inspect and copy the same.

(2) The agent, when entering, inspecting or examining any such place, may take with him an interpreter.

(3) Every person upon whom the provisions of this Agreement are binding shall grant the agent all facilities referred to.

28. Mortality Fund

The Committee may, in respect of every member who has not attained the age of 60 years, utilise an amount not exceeding 16c per week of the total of such member's contributions and the employer's contributions to the Fund for the purpose of providing mortality benefits.

29. Dissolution of the Society

(1) In the event of the expiry of this Agreement by effluxion of time or cessation for any other cause and no subsequent agreement being negotiated within 12 months of the date of expiry of this Agreement, for the purpose of continuing the operation of the Society, the Committee shall liquidate the Society, and should any amount be left over after realisation of all the assets of the Society and after payment of all creditors, liabilities and debts of the Society, the Council shall apportion surplus moneys, if any, on a ratio of—

(a) 50 parts to the trade unions represented on the Council, to be divided amongst such trade unions in proportion to the members being in good standing in each trade union as at the date of liquidation: Provided that the expression "members" is limited to those members who were covered by the Agreement;

(b) 50 parts to the employers' organisations represented on the Council in proportion to the number of members in good standing in terms of the Act in each such organisation as at the date of liquidation: Provided that the expression "members" is limited to those members who were covered by the Agreement.

(2) In the event of the dissolution of the Council or in the event of its ceasing to function during any period in which the Agreement is binding in terms of section 34 (2) of the Act, the Society shall continue to be administered by the Committee or such other persons as the Registrar may designate in terms of that subsection. Any vacancy occurring on the Committee may be filled by the Registrar from employers and employees, as the case may be, so as to ensure an equality of employer and employee representatives on the Committee.

(3) In the event of the Committee being unable or unwilling to discharge its duties or a deadlock arising thereon which renders the administration of the Society impracticable or undesirable in the opinion of the Registrar, he may appoint a person who shall forthwith co-opt two or more persons, one being a member of the Society or a paid official of one of the trade unions and the other being a member of the employers' organisation or a paid official thereof, and these persons together shall be the trustees in whom all the powers, rights and duties of the Committee shall vest. In the event of there being no Council in existence, the Society shall, upon the expiry of the Agreement, be liquidated by the Committee or trustees, as the case may be, and surplus moneys, if any, shall be apportioned on a ratio of—

(a) 50 parts to the trade unions represented on the Council to be divided amongst such trade unions in proportion to the members being in good standing in each trade union as at the date of liquidation: Provided that the expression "members" is limited to those members who were covered by the Agreement;

(b) 50 parts to the employers' organisations represented on the Council in proportion to the number of members in good standing in terms of the Act in each such organisation as at the date of liquidation: Provided that the expression "members" is limited to those members who were covered by the Agreement.

(4) Should the Committee have any reasonable cause for the dissolu-

bind voordat hierdie Ooreenkoms verstryk en nadat die Raad die beslissing van die Komitee om die Vereniging te ontbind, goedgekeur het en daar 'n bedrag oorbly nadat al die bates van die Vereniging te gelde gemaak en alle krediteure, laste en skulde van die Vereniging betaal is, moet die Raad die saldo aan geld, as daar is, in die volgende verhouding toewys:

(a) 50 dele aan die vakverenigings wat in die Raad verteenwoordig is, en dié bedrag moet tussen sodanige vakverenigings verdeel word in verhouding tot die getal volwaardige lede van elke vakvereniging op die datum van likwidasie: Met dien verstande dat die uitdrukking „lede" beperk is tot dié lede wat deur die Ooreenkoms gedek was;

(b) 50 dele aan die werkgewersorganisasies wat in die Raad verteenwoordig is, in verhouding tot die getal volwaardige lede ingevolge die Wet in elke sodanige organisasie op die datum van likwidasie: Met dien verstande dat die uitdrukking „lede" beperk is tot dié lede wat deur die Ooreenkoms gedek was.

(5) Ingeval die Raad ontbind word of ingeval dit ophou om te funksioneer gedurende enige tydperk waarin hierdie Ooreenkoms ingevolge artikel 34 (2) van die Wet bindend is en as die Komitee of dié ander persone wat die Registrateur kragtens artikel 34 (2) van die Wet aanwys, redelike grond het om die Vereniging te ontbind voordat hierdie Ooreenkoms verstryk, en indien daar 'n bedrag oorbly nadat alle krediteure, laste en skulde van die Vereniging betaal is, moet die Komitee of die ander persone hierin bedoel, na gelang van die geval, die saldo aan geld, as daar is, in die volgende verhouding toewys:

(a) 50 dele aan die vakverenigings wat in die Raad verteenwoordig is, en dié bedrag moet tussen sodanige vakverenigings verdeel word in verhouding tot die getal volwaardige lede van elke vakvereniging op die datum van die likwidasie: Met dien verstande dat die uitdrukking „lede" beperk is tot dié lede wat deur die Ooreenkoms gedek was;

(b) 50 dele aan die werkgewersorganisasies wat in die Raad verteenwoordig is, in verhouding tot die getal volwaardige lede ingevolge die Wet in elke sodanige organisasie op die datum van likwidasie: Met dien verstande dat die uitdrukking „lede" beperk is tot dié lede wat deur die Ooreenkoms gedek was.

(6) Ondanks andersluidende bepalings in hierdie Ooreenkoms, val alle bystand waarop lede kragtens hierdie klousule geregtig geword het en wat nie opgeëis word nie, binne ses maande vanaf die datum waarop dit verskuldig en betaalbaar geword het, aan die algemene fondse van die Raad toe. Ingeval daar geen Raad bestaan nie, word met die onopgeëiste geld gehandel soos in artikel 34 (4) *(c)* van die Wet bepaal.

Hierdie Ooreenkoms is namens die partye op hede die 22ste dag van November 1979 onderteken.

A. SAAYMAN,
Voorsitter van die Raad

J. B. CONNACHER,
Ondervoorsitter van die Raad

R. T. RAAFF, Sekretaris van die Raad

tion of the Society before the expiry of this Agreement and upon approval by the Council of the Committee's decision to dissolve the Society, and should any amount be left over after realisation of all the assets of the Society and after payment of all creditors, liabilities and debts of the Society, the Council shall apportion surplus moneys, if any, on a ratio of—

(a) 50 parts to the trade unions represented on the Council to be divided amongst such trade unions in proportion to the members being in good standing in each trade union as at the date of liquidation: Provided that the expression "members" is limited to those members who were covered by the Agreement;

(b) 50 parts to the employers' organisations represented on the Council in proportion to the number of members in good standing in terms of the Act in each such organisation as at the date of liquidation: Provided that the expression "members" is limited to those members who were covered by the Agreement

(5) In the event of the dissolution of the Council or in the event of its ceasing to function during any period in which this Agreement is binding in terms of section 34 (2) of the Act and should the Committee or such other persons as the Registrar may designate in terms of section 34 (2) of the Act have any reasonable cause for the dissolution of the Society before the expiry of the Agreement, and should any amount be left over after payment of all creditors, liabilities and debts of the Society, the Committee or other persons referred to herein, as the case may be, shall apportion surplus moneys, if any, on a ratio of—

(a) 50 parts to the trade unions represented on the Council, to be divided amongst such trade unions in proportion to the members being in good standing in each trade union as at the date of liquidation: Provided that the expression "members" is limited to those members who were covered by the Agreement;

(b) 50 parts to the employers' organisations represented on the Council in proportion to the number of members in good standing in terms of the Act in each such organisation as at the date of liquidation: Provided that the expression "members" is limited to those members who were covered by the Agreement.

(6) Notwithstanding anything to the contrary contained in this Agreement, should any benefits to which members have become entitled in terms of this clause but not being claimed within six months from the date upon which they became due and payable, such benefits shall be forfeited to the general funds of the Council. In the event of there being no Council in existence, the unclaimed moneys shall be dealt with as provided in section 34 (4) *(c)* of the Act.

This Agreement signed on behalf of the parties this 22nd day of November 1979.

A. SAAYMAN,
Chairman of the Council

J. B. CONNACHER,
Vice-Chairman of the Council

R. T. RAAFF,
Secretary of the Council

R.1829] [5 September 1980

WET OP FABRIEKE, MASJINERIE EN BOUWERK, 1941

MEUBELNYWERHEID, OOSTELIKE KAAPPROVINSIE

VRYSTELLING VAN SIEKTEVERLOFBEPALINGS

Ek, STEPHANUS PETRUS BOTHA, Minister van Mannekragbenutting, stel hierby, kragtens artikel 54 (1) van die Wet op Fabrieke, Masjinerie en Bouwerk, 1941, en met ingang van die tweede Maandag na die datum van publikasie van hierdie kennisgewing en vir sodanige tydperk of tydperke as wat die Ooreenkoms gepubliseer by Goewermentskennisgewing R.1828 van 5 September 1980, kragtens die Wet op Nywerheidsversoening, 1956, bindend mag wees, alle werkgewers wat onderworpe is aan die bepalings van genoemde Ooreenkoms, vry van die vereistes van artikel 21A van eersgenoemde Wet, ten opsigte van werknemers wat ingevolge genoemde Ooreenkoms op siektebystand geregtig is.

S. P. BOTHA
Minister van Mannekragbenutting

R.1829] [5 September 1980

FACTORIES, MACHINERY AND BUILDING WORK ACT, 1941

FURNITURE MANUFACTURING INDUSTRY, EASTERN CAPE PROVINCE

EXEMPTION FROM SICK LEAVE PROVISIONS

I, STEPHANUS PETRUS BOTHA, Minister of Manpower Utilisation, hereby, in terms of section 54 (1) of the Factories, Machinery and Building Work Act, 1941, and with effect from the second Monday after the date of publication of this notice and for such period or periods as the Agreement published under Government Notice R.1828 of 5 September 1980, may be binding in terms of the Industrial Conciliation Act, 1956, exempt all employers who are subject to the provisions of the said Agreement from the requirements of section 21A of the first-mentioned Act, in respect of employees who are entitled to sick pay in terms of the said Agreement.

S. P. BOTHA
Minister of Manpower Utilisation

University of Fort Hare
Together in Excellence

INHOUD

Departement van Mannekragbenutting

GOEWERMENTSKENNISGEWINGS

No.		Bladsy
R.1828	Wet op Nywerheidsversoening, 1956: Meubelnywerheid, Oostelike Kaapprovinsie: Siektebystandsvereniging-ooreenkoms	1
R.1829	Wet op Fabrieke, Masjinerie en Bouwerk, 1941: Meubelnywerheid, Oostelike Kaapprovinsie: Vrystelling van Siekteverlofbepalings	11

CONTENTS

Department of Manpower Utilization

GOVERNMENT NOTICES

No.		Page
R.1828	Industrial Conciliation Act, 1956: Furniture Manufacturing Industry, Eastern Cape Province: Sick Benefit Society Agreement	1
R.1829	Factories, Machinery and Building Work Act, 1941: Furniture Manufacturing Industry, Eastern Cape Province: Exemption from Sick Leave Provisions	11

GEDRUK VIR DIE STAATSDRUKKER, PRETORIA, DEUR KAAP & TRANSVAAL DRUKKERS (EDMS) BPK, KAAPSTAD—BB2710/12 500
PRINTED FOR THE GOVERNMENT PRINTER, PRETORIA, BY CAPE & TRANSVAAL PRINTERS (PTY) LTD, CAPE TOWN—BB2710/12 300

7207
University of Fort Hare
Together in Excellence

STAATSKOERANT
VAN DIE REPUBLIEK VAN SUID-AFRIKA

REPUBLIC OF SOUTH AFRICA
GOVERNMENT GAZETTE

PRYS + 1c AVB 20c PRICE + 1c GST
As 'n Nuusblad by die Poskantoor Geregistreer BUITELANDS 30c ABROAD *Registered at the Post Office as a Newspaper*
POSVRY · POST FREE

Vol. 182] PRETORIA, 29 AUGUSTUS / AUGUST 1980 [No. 7207

PROKLAMASIE

van die Staatspresident van die Republiek van Suid-Afrika

No. 169, 1980

OORDRAG VAN DIE ADMINISTRASIE VAN DIE SUID-AFRIKAANSE POLISIE AAN DIE ADMINISTRATEUR-GENERAAL

Kragtens die bevoegdheid my verleen by artikel 38 van die Wet op die Konstitusie van Suidwes-Afrika, 1968 (Wet 39 van 1968), maak ek hierby die wette in die Bylae vervat.

Gegee onder my Hand en die Seël van die Republiek van Suid-Afrika te Pretoria, op hede die Agt-en-twintigste dag van Augustus Eenduisend Negehonderd-en-tagtig.

M. VILJOEN, Staatspresident.

Op las van die Staatspresident-in-rade:

L. LE GRANGE.

BYLAE

Woordomskrywings

1. (1) In hierdie Proklamasie beteken "Algemene Proklamasie" die Proklamasie op die Oordrag van Uitvoerende Gesag (Algemene Bepalings), 1977 (Proklamasie AG 7 van 1977).

(2) Die uitdrukking "beampte" in die Algemene Proklamasie beteken, by die toepassing van daardie Proklamasie met betrekking tot hierdie Proklamasie, 'n offisier soos omskryf in artikel 1 van die Polisiewet, 1958 (Wet 7 van 1958).

(3) By die toepassing van die Algemene Proklamasie met betrekking tot hierdie Proklamasie, word hierdie Proklamasie geag 'n oordragproklamasie te wees soos in artikel 1 van genoemde Algemene Proklamasie omskryf.

(4) 'n Verwysing in hierdie Proklamasie na 'n bepaalde wet word uitgelê as 'n verwysing ook na 'n regulasie, reël of ander maatreël wat kragtens daardie wet gemaak is of daarop betrekking het.

Oordrag van administrasie van die Suid-Afrikaanse Polisie

2. Ondanks andersluidende bepalings van enige ander wet maar behoudens die bepalings van hierdie Proklamasie en die Algemene Proklamasie, word die administrasie van die sake van die gebied Suidwes-Afrika met

PROCLAMATION

by the State President of the Republic of South Africa

No. 169, 1980

TRANSFER OF THE ADMINISTRATION OF THE SOUTH AFRICAN POLICE TO THE ADMINISTRATOR-GENERAL

Under the powers vested in me by section 38 of the South West Africa Constitution Act, 1968 (Act 39 of 1968), I hereby make the laws set out in the Schedule.

Given under my Hand and the Seal of the Republic of South Africa at Pretoria this Twenty-eighth day of August, One thousand Nine hundred and Eighty.

M. VILJOEN, State President.

By Order of the State President-in-Council:

L. LE GRANGE.

SCHEDULE

Definitions

1. (1) In this Proclamation "General Proclamation" means the Executive Powers Transfer (General Provisions) Proclamation, 1977 (Proclamation AG. 7 of 1977).

(2) The expression "officer" in the General Proclamation means, for the purpose of the application of that Proclamation in relation to this Proclamation, an officer as defined in section 1 of the Police Act, 1958 (Act 7 of 1958).

(3) For the purpose of the application of the General Proclamation in relation to this Proclamation, this Proclamation shall be deemed to be a transfer proclamation as defined in section 1 of the said General Proclamation.

(4) A reference in this Proclamation to any particular law, shall be construed as including a reference to a regulation, rule or other enactment made under or relating to that law.

Transfer of the administration of the South African Police

2. Notwithstanding anything to the contrary contained in any other law but subject to the provisions of this Proclamation and the General Proclamation, the administration of the affairs of the Territory of South

betrekking tot 'n aangeleentheid wat by die inwerkingtreding van hierdie Proklamasie deur die Minister van Polisie van die Republiek geadministreer word, deur die Administrateur-generaal behartig.

Toepassing van wette

3. (1) Die bepalings van subartikel (1) van artikel 3 van die Algemene Proklamasie is, sonder om afbreuk te doen aan die bepalings van subartikel (2) van daardie artikel, nie van toepassing nie op—

(a) 'n verwysing na die Minister van Polisie of die Staatspresident of die *Staatskoerant* in die Polisiewet, 1958 (Wet 7 van 1958), behalwe die verwysing na genoemde Minister in artikels 4 en 32 van daardie Wet vir sover daardie artikels in verband staan met die werksaamhede van die Suid-Afrikaanse Polisie in die gebied ingevolge artikel 5 van daardie Wet of 'n ander wet maar met die uitsondering van die werksaamhede wat met betrekking tot paragraaf (a) van genoemde artikel 5 gewoonlik deur die tak van die Suid-Afrikaanse Polisie bekend as die Veiligheidstak verrig word;

(b) daardie bepalings van die Wet op Wapens en Ammunisie, 1969 (Wet 75 van 1969), wat betrekking het op die invoer in of uitvoer uit die Republiek, soos in daardie Wet omskryf, van wapens en ammunisie, soos aldus omskryf.

(2) Die uitdrukking "Staatspresident" waar dit die eerste keer voorkom in artikel 7 (1) van die Polisiewet, 1958, beteken, vir sover daardie artikel betrekking het op die gebruik van die Suid-Afrikaanse Polisie in die gebied, ook die Administrateur-generaal.

Finansiële reëlings

4. (1) Ten opsigte van die boekjaar wat op 31 Maart 1981 eindig, word daar uit die Staatsinkomstefonds, in die paaiemente wat die Tesourie van die Republiek bepaal, in die Sentrale Inkomstefonds van die gebied gestort die bedrag, soos deur die Kommissaris van die Suid-Afrikaanse Polisie met die instemming van genoemde Tesourie bepaal, waarvoor daar in die begrotingspos van uitgawes van die Suid-Afrikaanse Polisie uit die Staatsinkomstefonds vir daardie boekjaar voorsiening gemaak is met die oog op die besteding daarvan ten opsigte van die administrasie in of ten opsigte van die gebied, van die bepalings van 'n wet wat ingevolge hierdie Proklamasie deur die Administrateur-generaal behartig word of onder sy gesag geskied, en wat nie aldus bestee is of bestee sal word nie.

(2) Die bedrag ingevolge subartikel (1) in genoemde Sentrale Inkomstefonds gestort, word geag ingevolge die wette op die onttrekking van geld uit daardie Fonds, ten opsigte van die boekjaar wat op 31 Maart 1981 eindig, bewillig te wees vir die bestryding van die uitgawes in verband met die administrasie in of ten opsigte van die gebied van die bepalings in subartikel (1) bedoel, waarvoor voorsiening gemaak word in 'n begroting van uitgawes deur die Kommissaris van die Suid-Afrikaanse Polisie aan die Administrateur-generaal voorgelê en deur die Administrateur-generaal, na oorlegpleging met die rekenpligtige beampte bedoel in artikel 15 van die Skatkis- en Ouditwet, 1975 (Wet 66 van 1975), soos in die gebied toegepas, goedgekeur.

(3) Enige uitgawes in verband met die administrasie in of ten opsigte van die gebied, van 'n bepaling van 'n wet wat betrekking het op 'n aangeleentheid in artikel 2 van hierdie Proklamasie bedoel, wat nie ingevolge hierdie Proklamasie deur die Administrateur-generaal

West Africa in relation to any matter which at the commencement of this Proclamation is administered by the Minister of Police of the Republic shall be carried on by the Administrator-General.

Application of laws

3. (1) The provisions of subsection (1) of section 3 of the General Proclamation shall, without detracting from the provisions of subsection (2) of that section, not apply to—

(a) any reference to the Minister of Police or the State President or the *Government Gazette* in the Police Act, 1958 (Act 7 of 1958), except the reference to the said Minister in sections 4 and 32 of that Act in so far as those sections are connected with the functions of the South African Police in the Territory in terms of section 5 of that Act or any other law but excluding such functions as may in relation to paragraph (a) of the said section 5 ordinarily be performed by the branch of the South African Police known as the Security Branch;

(b) those provisions of the Arms and Ammunition Act, 1969 (Act 75 of 1969), that relate to the importation into or exportation out of the Republic, as defined in that Act, of arms and ammunition, as so defined.

(2) The expression "State President", where it occurs for the first time in section 7 (1) of the Police Act, 1958, includes, in so far as that section relates to the employment of the South African Police in the Territory, the Administrator-General.

Financial arrangements

4. (1) In respect of the financial year ending on 31 March 1981 there shall be paid from the State Revenue Fund, in such instalments as may be determined by the Treasury of the Republic, into the Central Revenue Fund of the Territory the amount, as determined by the Commissioner of the South African Police with the concurrence of the said Treasury, which has been provided for in the vote of expenditure of the South African Police from the State Revenue Fund for that financial year with the object of spending it in respect of the administration, in or in respect of the Territory, of the provisions of any law which is carried on by the Administrator-General or takes place under his authority, and has not been or will not be so spent.

(2) The amount paid into the said Central Revenue Fund in terms of subsection (1), shall be deemed to have been appropriated, in terms of the laws governing the withdrawal of money from that Fund, in respect of the financial year ending 31 March 1981 for the defrayal of such expenditure in connection with the administration in or in respect of the Territory, of the provisions referred to in subsection (1), as may be provided for in an estimate of expenditure submitted by the Commissioner of the South African Police to the Administrator-General and approved by the Administrator-General after consultation with the accounting officer referred to in section 15 of the Exchequer and Audit Act, 1975 (Act 66 of 1975), as applied in the Territory.

(3) Any expenditure in connection with the administration in or in respect of the Territory, of a provision of any law relating to any matter referred to in section 2 of this Proclamation, which is not administered by the Administrator-General in terms of this Proclamation,

behartig word nie, word, onderworpe aan bewilliging by wet van sodanige uitgawes, uit genoemde Sentrale Inkomst fonds bestry asof die betrokke administrasie deur die Administrateur-generaal behartig word of onder sy gesag geskied

Kort titel en inwerkingtreding

5. Hierdie Proklamasie heet die Proklamasie op die Oordrag van Uitvoerende Gesag (Polisie), 1980, en tree op 1 September 1980 in werking.

shall, subject to appropriation by law of such expenditure, be defrayed from the said Central Revenue Fund as if the relevant administration is carried on by the Administrator-General or takes place under his authority

Short title and commencement

5. This Proclamation shall be called the Executive Powers (Police) Transfer Proclamation, 1980, and shall come into operation on 1 September 1980.

GOEWERMENTSKENNISGEWINGS

GOVERNMENT NOTICES

DEPARTEMENT VAN BINNELANDSE SAKE

No. 1852 29 Augustus 1980

ONGEWENSTE PUBLIKASIES OF VOORWERPE

'n Komitee bedoel in artikel 4 van die Wet op Publikasies, 1974, het kragtens artikel 11 (2) van genoemde Wet beslis dat die ondergenoemde publikasies of voorwerpe ongewens is binne die bedoeling van artikel 47 (2) van genoemde Wet:

DEPARTMENT OF THE INTERIOR

No. 1852 29 August 1980

UNDESIRABLE PUBLICATIONS OR OBJECTS

A committee referred to in section 4 of the Publications Act, 1974, decided under section 11 (2) of the said Act that the undermentioned publications or objects are undesirable within the meaning of section 47 (2) of the said Act:

LYS/LIST P80/46

Inskrywing No. Entry No.	Pulikasie of voorwerp Publication or object	Skrywer of voortbringer Author or producer	Artikel 47 (2) Section 47 (2)
P80/7/65	*Fight it out, Work it out, Love it out*	Claire Ponsroy	(a)
P80/7/69	*J. V. Stalin Works*—Vol 13, July 1930–January 1934	J. V. Stalin	(e)
P80/7/150	*Tribal Chieftains*	Barrie Hughes	(a)+(d)
P80/7/158	*Jesus Incident, The* (d.i. slegs die 1980 uitgawe met die No ISBN 0 7088 8061 4/i.e. only the 1980 edition with the No ISBN 0 7088 8061 4)	Frank Herbert and Bill Ransom	(a)+(b)
P80/8/43	*Separate Development, A*	Christopher Hope	(d)+(a)
P80/8/55	*Spiegel, Der*—Nr 32, 4 August 1980	Der Spiegel, Hamburg	(a)
P80/8/58	*Up, Up and Away*—SPQ/309 (Plakkaat/Poster)	Artist: Stephen Pearson	(a)
P80/8/59	*Bike S.A.*—Issue No 62, August 1980	Bike Promotions (Pty) Ltd	(a)
P80/8/61	*Towards Revolution*—Vol 1	Edited by John Gerassi	(e)
P80/8/80	*Mercenary Calling, A*	Martin Walker	(a)
P80/8/109	*Broken English*—MC 4376 (Musiekkasset/Music Cassette)	Marianne Faithfull	(a)

No. 1853 29 Augustus 1980

TERSYDESTELLING VAN VERKLARING DAT PUBLIKASIE(S) ONGEWENS IS

'n Komitee bedoel in artikel 4 van die Wet op Publikasies, 1974, het kragtens artikel 15 (2) van genoemde Wet op hersiening beslis dat die ondergenoemde publikasie nie binne die bedoeling van artikel 47 (2) van genoemde Wet ongewens is nie. Die ondergenoemde inskrywing ten opsigte van die publikasie word hierby geskrap:

No. 1853 29 August 1980

SETTING ASIDE OF DECLARATION THAT PUBLICATION(S) IS/ARE UNDESIRABLE

A committee referred to in section 4 of the Publications Act, 1974, decided under section 15 (2) of the said Act on review that the undermentioned publications are not undesirable within the meaning of section 47 (2) of the said Act. The undermentioned entries in respect of the publication are hereby deleted:

Inskrywing No. Entry No.	Publikasie Publication	Skrywer of voortbringer Author or producer	Inskrywing geskrap Entry deleted
P80/7/119	*Shining, The*	Stephen King	GK./G.N. 766, SK./G.G. 5981 van/of 14/4/1978
P80/8/21	Jaws	Peter Benchley	GK./G.N. 720, SK./G.G. 4652 van/of 11/4/75.

No. 1855 29 Augustus 1980

PUBLIKASIES OF VOORWERPE.—VERTOE TEN OPSIGTE VAN APPÈL

Die Direktoraat van Publikasies het op 21 Augustus 1980, kragtens artikel 13 van die Wet op Publikasies, 1974, appèl aangeteken teen die beslissing op 19 Augustus 1980, van 'n komitee bedoel in artikel 4 van genoemde Wet dat die ondergenoemde publikasie binne die bedoeling van artikel 47 (2) (a) van genoemde Wet ongewens is:

No. 1855 29 August 1980

PUBLICATIONS OR OBJECTS.—REPRESENTATIONS IN RESPECT OF APPEAL

On 21 August 1980, the Directorate of Publications appealed under section 13 of the Publications Act, 1974, against the decision on 19 August 1980, of a committee referred to in section 4 of the said Act, that the undermentioned publication is undesirable within the meaning of section 47 (2) (a) of the said Act:

Inskrywing No. Entry No.	Publikasie Publication	Skrywer of voortbringer Author or producer
P80/7/65.....	*Fight it out, Work it out, Love it out*.....	Claire Pomeroy

No. 1856 29 Augustus 1980

PUBLIKASIES OF VOORWERPE.—VERTOE TEN OPSIGTE VAN APPÈL

Die Direktoraat van Publikasies het op 21 Augustus 1980, kragtens artikel 13 van die Wet op Publikasies, 1974, appèl aangeteken teen die beslissing op 25 Junie 1980, van 'n komitee bedoel in artikel 4 van genoemde Wet dat die ondergenoemde publikasie binne die bedoeling van artikel 47 (2) (e) van genoemde Wet ongewens is:

No. 1856 29 August 1980

PUBLICATIONS OR OBJECTS.—REPRESENTATIONS IN RESPECT OF APPEAL

On 21 August 1980, the Directorate of Publications appealed under section 13 of the Publications Act, 1974, against the decision on 25 June 1980, of a committee referred to in section 4 of the said Act, that the undermentioned publication is undesirable within the meaning of section 47 (2) (e) of the said Act:

Inskrywing No. Entry No.	Publikasie Publication	Skrywer of voortbringer Author or producer
P80/6/75.....	*Sixteenth Special Report of the Director-General on the Application of the Declaration concerning the Policy of Apartheid of the Republic of South Africa*—International Labour Conference 66th Session 1980	International Labour Office, Geneva

No. 1857 29 Augustus 1980

ONGEWENSTE PUBLIKASIES OF VOORWERPE.—REGSTELLING

In *Staatskoerant* 7185, in Goewermentskennisgewing 1738 van 15 Augustus 1980, vervang die inskrywing P80/8/7 deur die volgende inskrywing:

No. 1857 29 August 1980

UNDESIRABLE PUBLICATIONS OR OBJECTS.—CORRECTION

In *Government Gazette* 7185, in Government Notice 1738 of 15 August 1980 substitute the following entry for entry P80/8/7:

Inskrywing No. Entry No.	Publikasie of voorwerp Publication or object	Skrywer of voortbringer Author or producer	Artikel 47 (2) Section 47 (2)
P80/8/7.....	*Lenin*—Vol 4: *The Bolsheviks and World Communism* (On cover: *The Bolsheviks and World Revolution*)	Tony Cliff.....	(e)

No. 1854 29 Augustus 1980

VERBOD OP BESIT . AN ONGEWENSTE PUB' IKASIES

'n Komitee bedoel in artikel 4 van die Wet op Publikasies, 1974, wat kragtens artikel 11 (2) van genoemde Wet beslis het dat die ondergenoemde publikasies ongewens is binne die bedoeling van artikel 47 (2) van genoemde Wet, het kragtens artikel 9 (3) van genoemde Wet die besit van genoemde publikasies verbied. Genoemde verbod is kragtens artikel 9 (5) van genoemde Wet deur die Appèlraad oor Publikasies bekragtig.

No. 1854 29 August 1980

PROHIBITION ON POSSESSION OF UNDESIRABLE PUBLICATIONS

A committee referred to in section 4 of the Publications Act, 1974, which decided under section 11 (2) of the said Act that the undermentioned publications are undesirable within the meaning of section 47 (2) of the said Act, has under section 9 (3) of the said Act, prohibited the possession of the said publications. The said prohibition was confirmed by the Publications Appeal Board under section 9 (5) of the said Act.

Inskrywing No. Entry No.	Publikasie of voorwerp Publication or object	Skrywer of voortbringer Author or producer	Artikel 47 (2) Section 47 (2)
P80/6/59.....	*Mandela*—The People's Leader (T-Hemp: Voorwerp)	Nie vermeld nie/Not stated.....	(e)
P80/7/1.....	*African Frontline*—No 3, June 1980.....	Afrosoc, University of Cape Town, Rondebosch	(e)
P80/7/3.....	*Apartheid War Machine, The*—Fact Paper on Southern Africa No 8, April 1980	International Defence and Aid Fund, London..	(e)
P80/7/4.....	*PAC World*—March 1980.....	Pan Africanist Congress of Azania, Dar es Salaam, Tanzania	(e)
P80/7/8.....	*Forge, The*—Vol 5, No 22, June 6, 1980.....	The Forge, Montreal, Quebec.....	(e)
P80/7/26.....	*People's History, A*—Resistance in South Africa	National Union of South African Students, University of Cape Town	(e)
P80/7/55.....	*Intercontinental Press*—Vol 18, No 24, June 23, 1980	Intercontinental Press/Inprecor, New York....	(e)
P80/7/56.....	*Resister*—Bulletin No 8, May/June 1980.....	Committee on South African War Resistance, London	(e)
P80/7/57.....	*Workers' Unity*—Issue No 20, June 1980.....	South African Congress of Trade Unions, London	(e)
P80/7/58.....	*People Demand . . . The Freedom Charter*—25th Anniversary—26th June (Pamflet/Pamphlet)	Nie vermeld nie/Not stated.....	(e)
P80/7/72.....	*My Mother Taught Me (The Traveller's Companion Series*—TC 455)	Tor Kung.....	(a)
P80/7/102.....	*Sex Cruise Orgy* (Whitehouse Photo Reader No 3)	John Frampton.....	(a)
P80/7/108.....	*Late Night Business* (Secretary Series Sec 704)...	Carole Wilson.....	(a)
P80/7/111.....	*Under One Banner* (Pamflet/Pamphlet).....	Nie vermeld nie/Not stated.....	(e)
P80/7/115.....	*Nelson Mandela Says*—(Pamflet/Pamphlet).....	African National Congress.....	(e)
P80/7/116.....	*Mayibuye*—No 3, 1980.....	African National Congress.....	(e)
P80/7/121.....	*Resist Apartheid Militarism* (Kleefseël/Sticker—Illustrasie/Illustration)	Nie vermeld nie/Not stated.....	(e)
P80/7/123.....	*Mark moet Blijven!* (met byvoegsel/with supplement "*Meer Informatie*")	COSAWR-NL, Amsterdam.....	(e)
P80/7/124.....	*Mark must Stay!* (Vertaling/Translation—Pamflet/Pamphlet)	COSAWR-NL, Amsterdam.....	(e)
P80/7/125.....	*Intercontinental Press*—Vol 18, No 26, July 7, 1980	408 Printing and Publishing Corporation, New York	(e)
P80/7/126.....	*International Cover Models*—No 17, December 1979	Cover Models, London.....	(a)
P80/7/127.....	*International Cover Models*—No 18, February 1980	Cover Models, London.....	(a)
P80/7/132.....	*Freedom Charter, The* (insluitende vertaling/including translation "Lokwalo Lwa Tokologo")	Nie vermeld nie/Not stated.....	(e)
P80/7/135.....	*Freedom Charter of South Africa, The* (Vlugskrif/Leaflet)	United Nations Centre Against Apartheid, New York	(e)
P80/7/139.....	*ASSO Journal, The*—4th Quarter, Vol 1, December 1978	The Secretariat, ASSO/NUL, Roma, Lesotho..	(d)+(e)
P80/7/141.....	*Vanguard, The*—No 6, March 1980.....	CASSAS, NUL, Lesotho.....	(e)

Koop Nasionale Spaarsertifikate

Buy National Savings Certificates

BOTHALIA

Bothalia is 'n medium vir die publikasie van plantkundige artikels oor die flora en plantegroei van Suidelike Afrika. Een of twee dele van die tydskrif word jaarliks gepubliseer.

Die volgende dele is beskikbaar:

Vol. 3 Deel 1 uit druk
2 1937 75c
3 1938 75c
4 1939 75c

Vol. 4 Deel 1 1941 75c
2 1942 75c
3 1948 75c
4 1948 75c

Vol. 5 1950 R3

Vol. 6 Deel 1 1951 R1,50
2 1954 R2,50
3 1956 R2
4 1957 R2

Vol. 7 Deel 1 1958 R2
2 1960 R3
3 1961 R3
4 1962 R3

Vol. 8 Deel 1 1962 R3
2 1964 R3
3 1965 R3
4 1965 R3

Supplement

Vol. 9 Deel 1 1966 R3
2 1967 R3
3 en 4
1969 R6

Vol. 10 Deel 1 1969 R3
2 1971 R3
3 1971 R3
4 1972 R3

Vol. 11 Deel 1 en 2
1973 R6
3 1974 R3
4 1975 R3

Vol. 12 Deel 1 1976 R5
2 1977 R5
3 1978 R7,50

Verkrygbaar van die Direkteur, Afdeling Landbou-inligting, Privaatsak X144, Pretoria.

Verkoopbelasting moet by alle binnelandse bestellings ingesluit word.

BOTHALIA

Bothalia is a medium for the publication of botanical papers dealing with the flora and vegetation of Southern Africa. One or two parts of the journal are published annually.

The following parts are available:

Vol. 3 Part 1 out of print
2 1937 75c
3 1938 75c
4 1939 75c

Vol. 4 Part 1 1941 75c
2 1942 75c
3 1948 75c
4 1948 75c

Vol. 5 1950 R3

Vol. 6 Part 1 1951 R1,50
2 1954 R2,50
3 1956 R2
4 1957 R2

Vol. 7 Part 1 1958 R2
2 1960 R3
3 1961 R3
4 1962 R3

Vol. 8 Part 1 1962 R3
2 1964 R3
3 1965 R3
4 1965 R3

Supplement

Vol. 9 Part 1 1966 R3
2 1967 R3
3 and 4
1969 R6

Vol. 10 Part 1 1969 R3
2 1971 R3
3 1971 R3
4 1972 R3

Vol. 11 Part 1 and 2
1973 R6
3 1974 R3
4 1975 R3

Vol. 12 Part 1 1976 R5
2 1977 R5
3 1978 R7,50

Obtainable from the Director, Division of Agricultural Information, Private Bag X144, Pretoria.

Sales tax must accompany all inland orders.

University of Fort Hare
Together in Excellence

PHYTOPHYLACTICA

Hierdie publikasie is 'n voortsetting van die Suid-Afrikaanse Tydskrif vir Landbouwetenskap Jaargang 1 tot 11, 1958–1968 en bevat artikels oor Entomologie, Dierkundige Plantplae, Nematologie, Plantpatologie, Mikrobiologie, Mikologie, Taksonomiese Studies, Biologie en Beheer. Vier dele van die tydskrif word per jaar gepubliseer.

Verdienstelike landboukundige bydraes van oorspronklike wetenskaplike navorsing word vir plasing in hierdie tydskrif verwelkom. Voorskrifte vir die opstel van sulke bydraes is verkrygbaar van die Direkteur, Landbou-inligting, Privaatsak X144, Pretoria, aan wie ook alle navrae in verband met die tydskrif gerig moet word.

Die tydskrif is verkrygbaar van bogenoemde adres teen R1,50 per eksemplaar of R6 per jaar, posvry (Buitelands R1,75 per eksemplaar of R7 per jaar).

Verkoopbelasting moet by binnelandse bestellings ingesluit word.

PHYTOPHYLACTICA

This publication is a continuation of the South African Journal of Agricultural Science Vol. 1 to 11 1958–1968 and deals with Entomology, Zoological Plant Pests, Nematology, Plant Pathology, Microbiology, Mycology, Taxonomic Studies, Biology and Control. Four parts of the journal are published annually.

Contributions of scientific merit on agricultural research are invited for publication in this journal. Directions for the preparation of such contributions are obtainable from the Director, Agricultural Information, Private Bag X144, Pretoria, to whom all communications in connection with the journal should be addressed.

The journal is obtainable from the above-mentioned address at R1,50 per copy or R6 per annum, post free (Other countries R1,75 per copy or R7 per annum).

Sales tax must accompany inland orders.

INHOUD

No.		Bladsy No.	Staatskoerant No.
	PROKLAMASIE		
169	Wet op die Konstitusie van Suidwes-Afrika (39/1968): Oordrag van die administrasie van die SA Polisie aan die Administrateur-generaal	1	7202
	Binnelandse Sake, Departement van		
	Goewermentskennisgewings		
1852	Wet op Publikasies (42/1974): Ongewenste publikasies of voorwerpe: Lys P80/46	3	7207
1853	do.: Terugbestelling	3	7207
1854	do.: Verbod	5	7207
1855	do.: Verbod	4	7207
1856	do.: do	4	7207
1857	do.: Verbetering	4	7207

CONTENTS

No.		Page No.	Gazette No.
	PROCLAMATION		
169	South West Africa Constitution Act (39/1968): Transfer of the administration of SA Police to the Administrator-General	1	7207
	Interior, Department of the		
	Government Notices		
1852	Publications Act (42/1974): Undesirable publications or objects: List P80/46	3	7207
1853	do.: Deleted	3	7207
1854	do.: Prohibition	5	7207
1855	do.: Appeal	4	7207
1856	do.: do	4	7207
1857	do.: Correction	4	7207

University of Fort Hare
Together in Excellence

7208
University of Fort Hare
Together in Excellence

STAATSKOERANT
VAN DIE REPUBLIEK VAN SUID-AFRIKA

REPUBLIC OF SOUTH AFRICA
GOVERNMENT GAZETTE

PRYS + 1c AVB 20c PRICE + 1c GST
As 'n Nuusblad by die Poskantoor Geregistreer BUITELANDS 30c ABROAD *Registered at the Post Office as a Newspaper*
POSVRY · POST FREE

Vol. 183] PRETORIA, 5 SEPTEMBER 1980 [No. 7208

PROKLAMASIES

van die Staatspresident van die Republiek van Suid-Afrika

No. 161, 1980

VERKLARING VAN 'N NASIONALE PAD.—PROVINSIE DIE KAAP DIE GOEIE HOOP

Kragtens artikel 4 (1) (a) van die Wet op Nasionale Paaie, 1971 (Wet 54 van 1971), soos gewysig, verklaar ek hierby dat die roete wat in die bygaande Bylae beskryf word, 'n nasionale pad is.

Gegee onder my Hand en die Seël van die Republiek van Suid-Afrika te Pretoria, op hede die Vyftiende dag van Augustus Eenduisend Negehonderd-en-tagtig.

M. VILJOEN, Staatspresident.

Op las van die Staatspresident-in-rade:

J. C. HEUNIS.

BYLAE

PROVINSIE DIE KAAP DIE GOEIE HOOP

Beskrywing van roete

'n Roete, soos aangedui op bygaande Plan P311/80, wat begin op restant van Erf 675 van Colesberg en daarvandaan loop oor genoemde restant; Erwe 680, 682, 676 en 683, almal van Colesberg; Erf 1072 van Colesberg-uitbreiding 4; restant, Gedeelte 6 (Vee Pos) en Gedeelte 4 (Die Berg), almal van Buffelsvalley 69; Gedeeltes 1, 4 en 3, almal van Vogelfontein 71; Gedeelte 4 van Uitvlugtsfontein 73; T'zamenkomst 72; restant en Gedeelte 2, albei van Uitvlugt 75; restant van Stockenstroms Kop 77; en die Oranjerivier, waar dit eindig ('n totale afstand van ongeveer 37,5 km).

(Nasionale Roete: Colesberg-Oranjerivier, distrik Colesberg.)

PROCLAMATIONS

by the State President of the Republic of South Africa

No. 161, 1980

DECLARATION OF A NATIONAL ROAD.—PROVINCE OF THE CAPE OF GOOD HOPE

In terms of section 4 (1) (a) of the National Roads Act, 1971 (Act 54 of 1971), as amended, I hereby declare that the route described in the Schedule hereto, shall be a national road.

Given under my Hand and the Seal of the Republic of South Africa at Pretoria this Fifteenth day of August, One thousand Nine hundred and Eighty.

M. VILJOEN, State President.

By Order of the State President-in-Council:

J. C. HEUNIS.

SCHEDULE

PROVINCE OF THE CAPE OF GOOD HOPE

Description of route

A route, as indicated on the attached Plan P311/80, commencing on remainder of Erf 675 of Colesberg and thence proceeding over the said remainder; Erven 680, 682, 676 and 683, all of Colesberg; Erf 1072 of Colesberg Extension 4; remainder, Portion 6 (Vee Pos) and Portion 4 (Die Berg), all of Buffelsvalley 69; Portions 1, 4 and 3, all of Vogelfontein 71; Portion 4 of Uitvlugtsfontein 73; T'zamenkomst 72; remainder and Portion 2, both of Uitvlugt 75; remainder of Stockenstroms Kop 77; and the Orange River, where it terminates (a total distance of about 37,5 km).

(National Route: Colesberg-Orange River, District of Colesberg.)

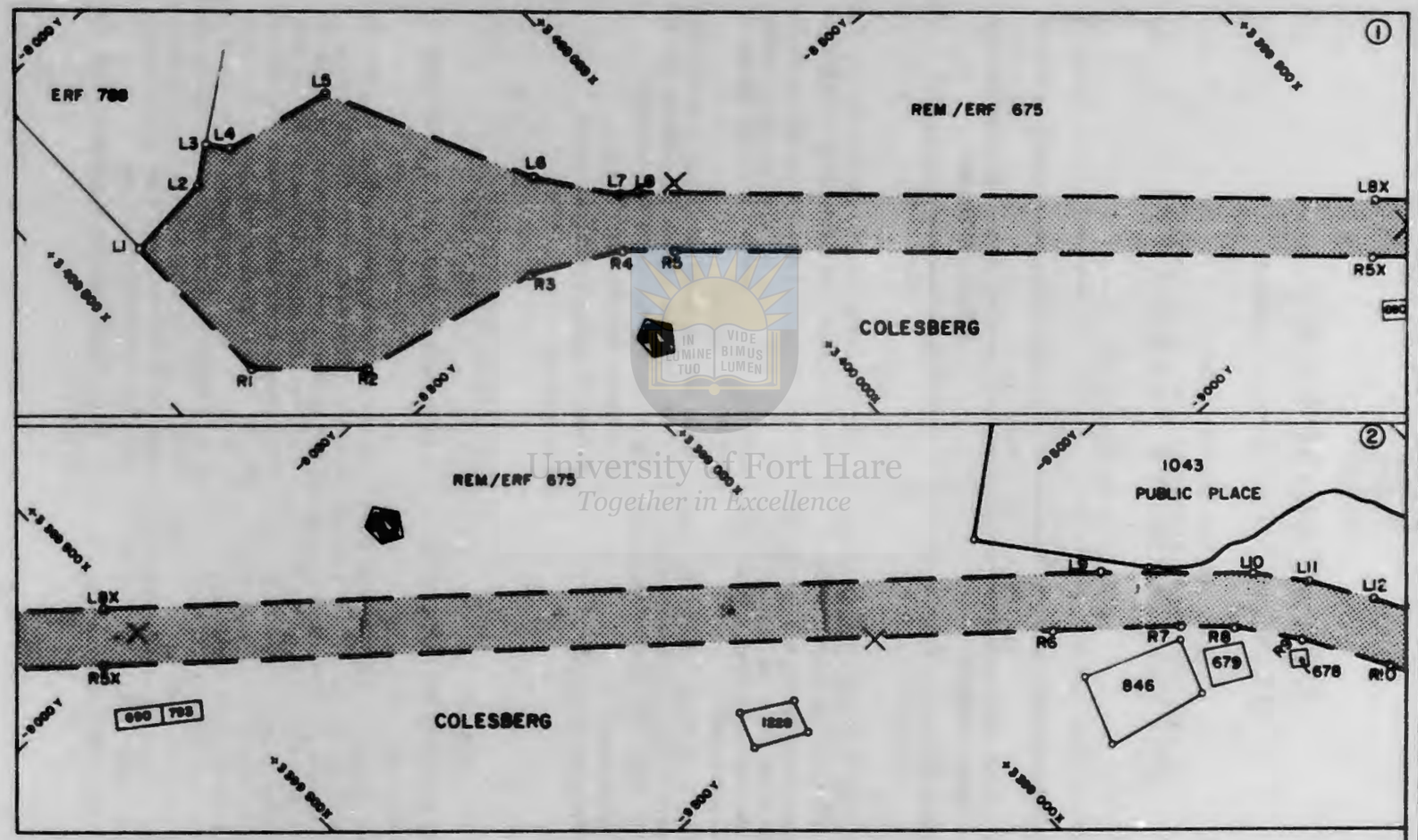

Nasionale Vervoerkommissie National Transport Commission	Die figuur getoon The figure shown	stel die padreserwe voor van 'n gedeelte represents the road reserve of a portion van Nasionale Roete 1 Seksie 12 of National Route 1 Section 12	Vel 1 van 8 Sheet 1 of 8 P 311/80

University of Fort Hare
Together in Excellence

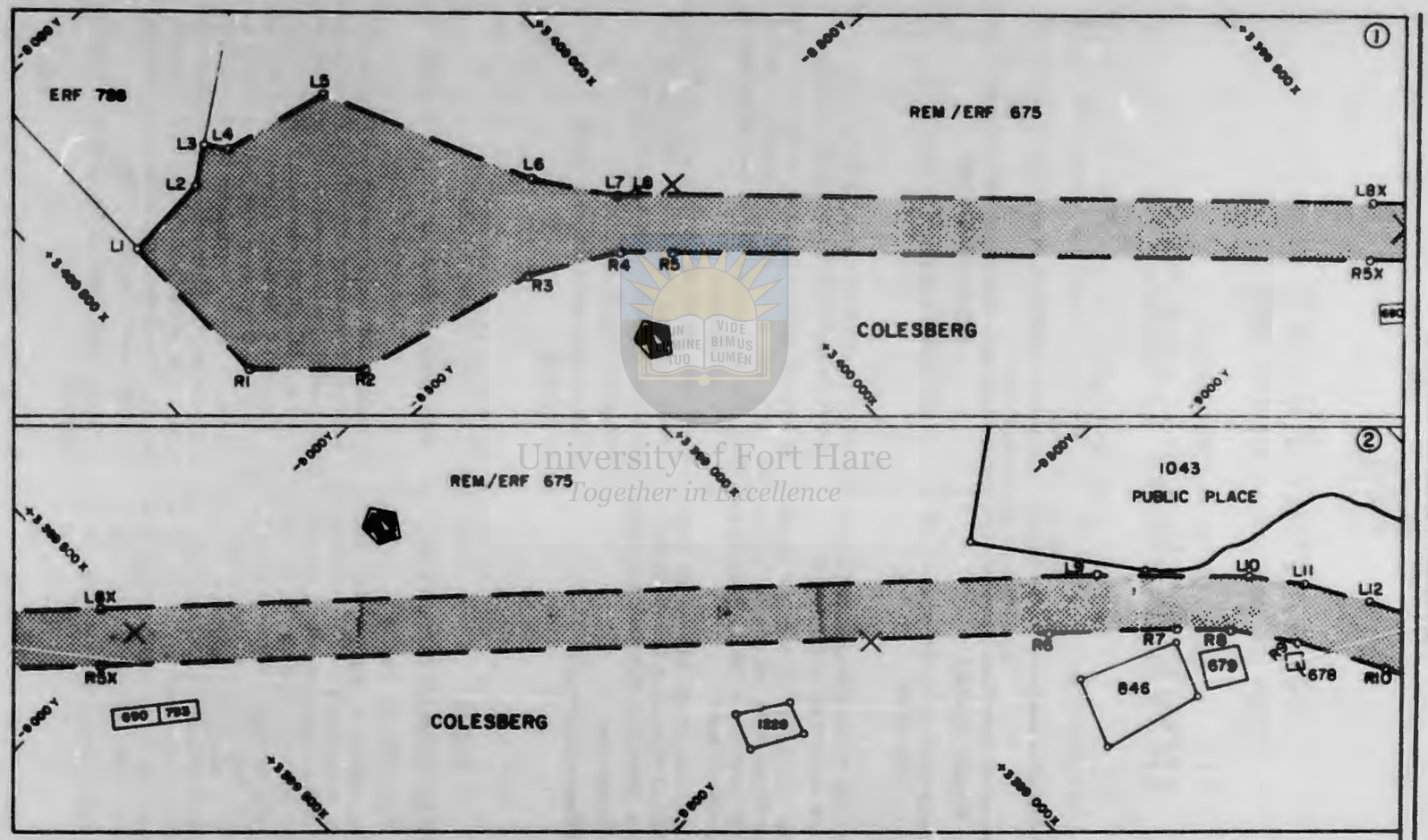

Nasionale Vervoerkommissie National Transport Commission	Die figuur getoon The figure shown	stel die padreserwe voor van 'n gedeelte represents the road reserve of a portion van Nasionale Roete 1 Seksie 12 of National Route 1 Section 12	Vel 1 van 8 Sheet 1 of 8 P 311/80

University of Fort Hare
Together in Excellence

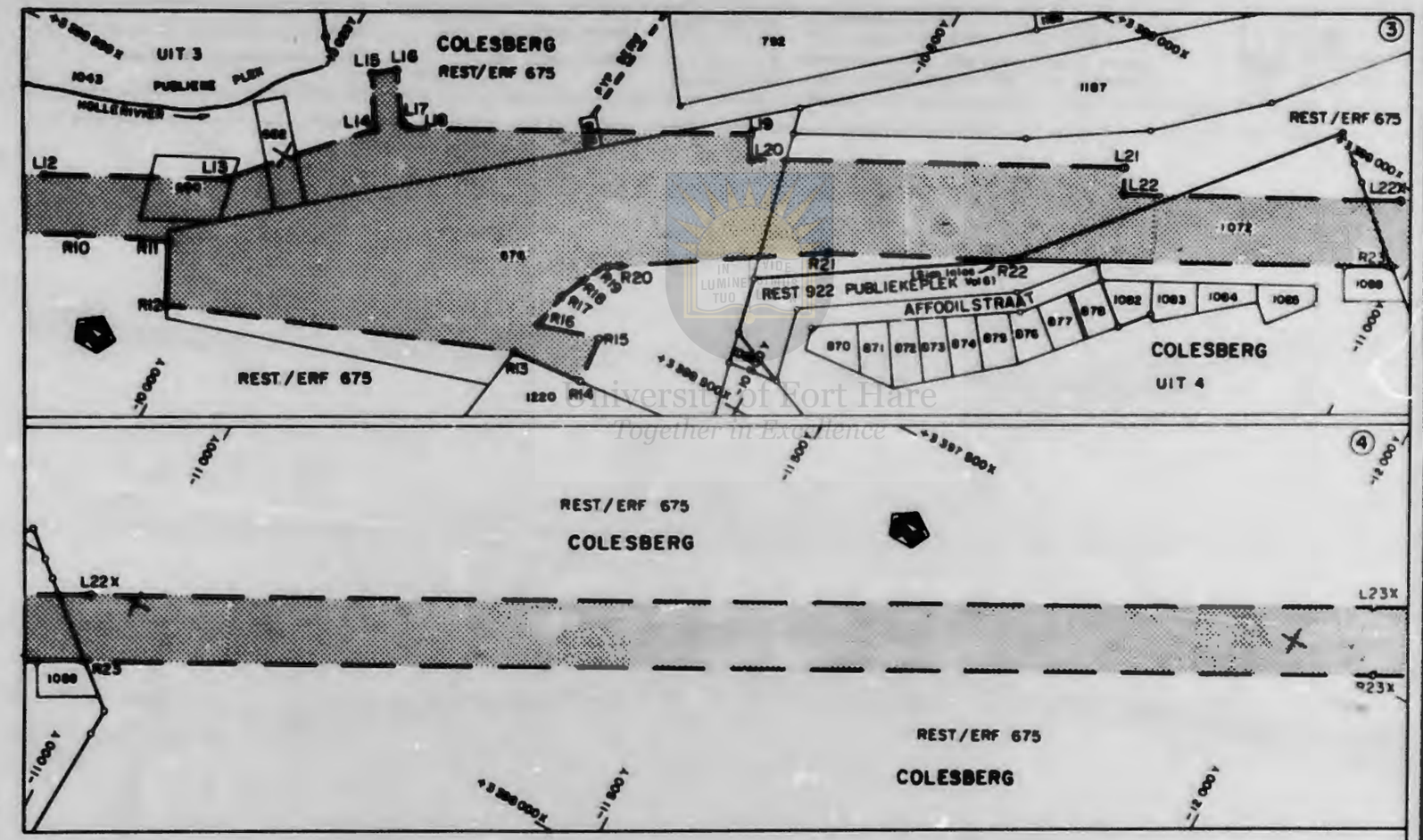

Nasionale Vervoerkommissie National Transport Commission	Die figuur getoon The figure shown	stel die padreserwe voor van 'n gedeelte represents the road reserve of a portion van Nasionale Roete 1 Seksie 12 of National Route 1 Section 12	Vel 2 van 8 Sheet 2 of 8	P 311/80

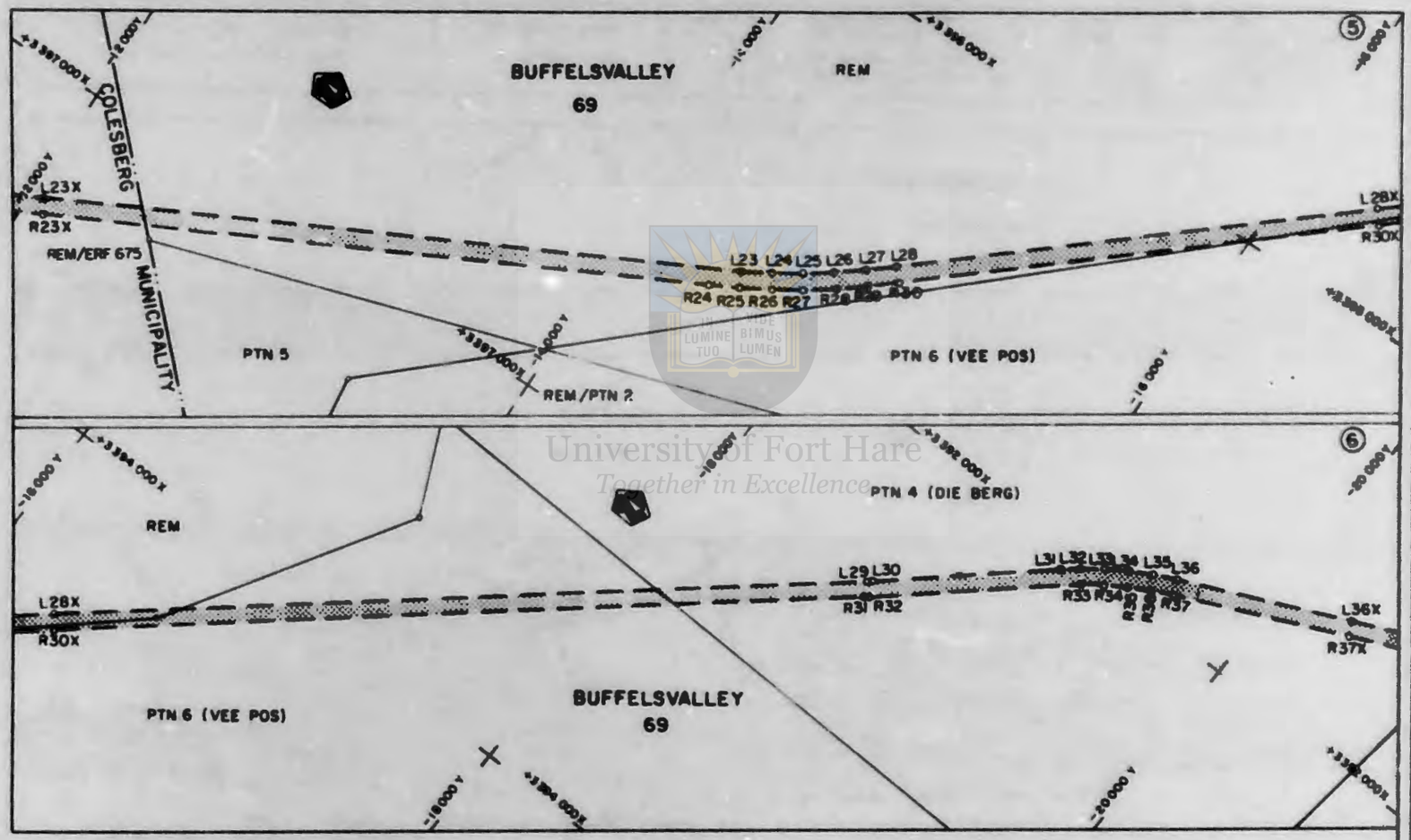

Nasionale Vervoerkommissie National Transport Commission	Die figuur getoon The figure shown	stel die padreserwe voor van 'n gedeelte represents the road reserve of a portion van Nasionale Roete 1 Seksie 12 of National Route 1 Section 12	Vel 3 van 8 Sheet 3 of 8	P 311/80

University of Fort Hare
Together in Excellence

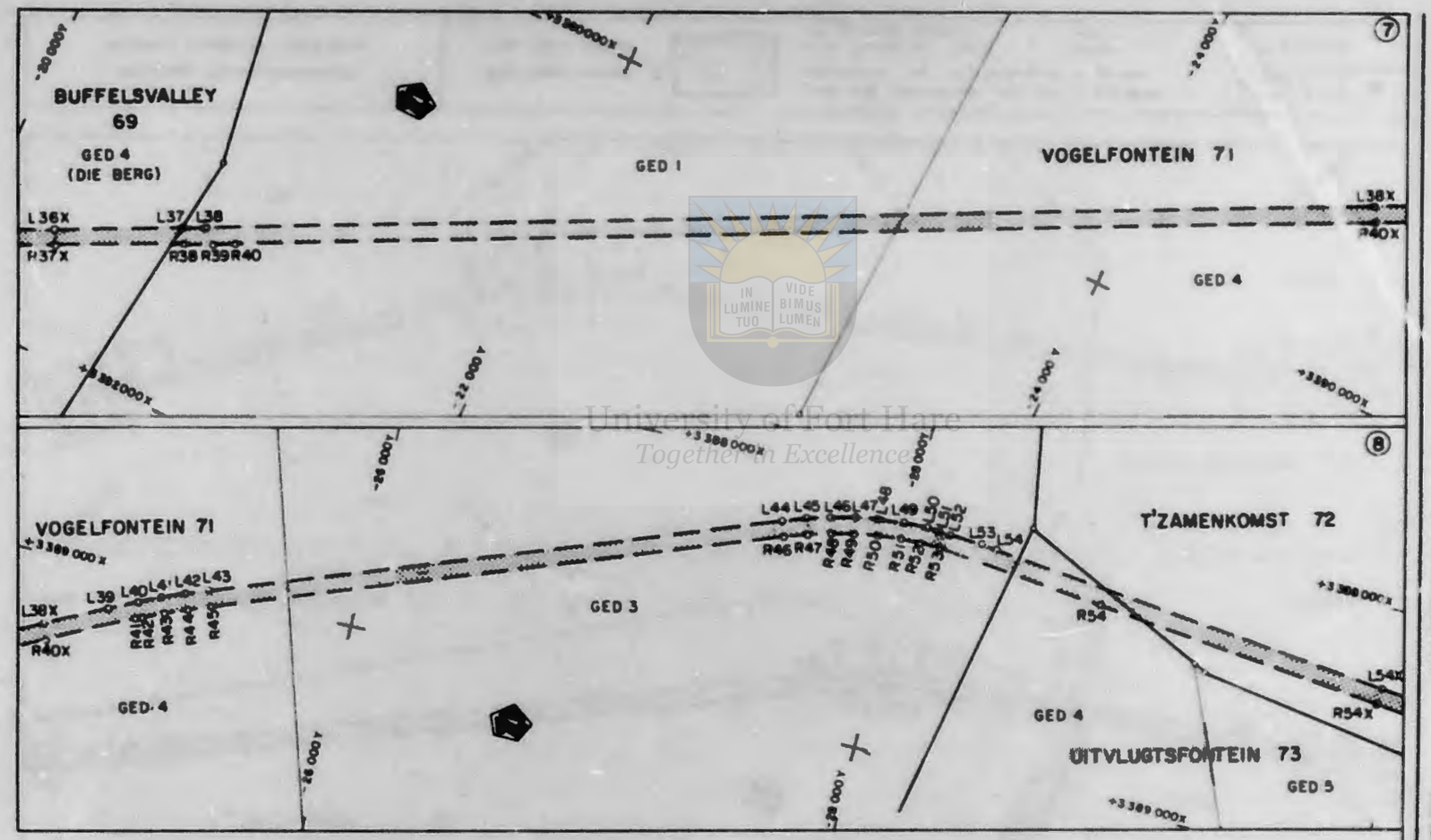

Nasionale Vervoerkommissie National Transport Commission	Die figuur getoon The figure shown	stel die padreserwe voor van 'n gedeelte represents the road reserve of a portion van Nasionale Roete 1 Seksie 12 of National Route 1 Section 12	Vel 4 van 8 Sheet 4 of 8	P 311/80

University of Fort Hare
Together in Excellence

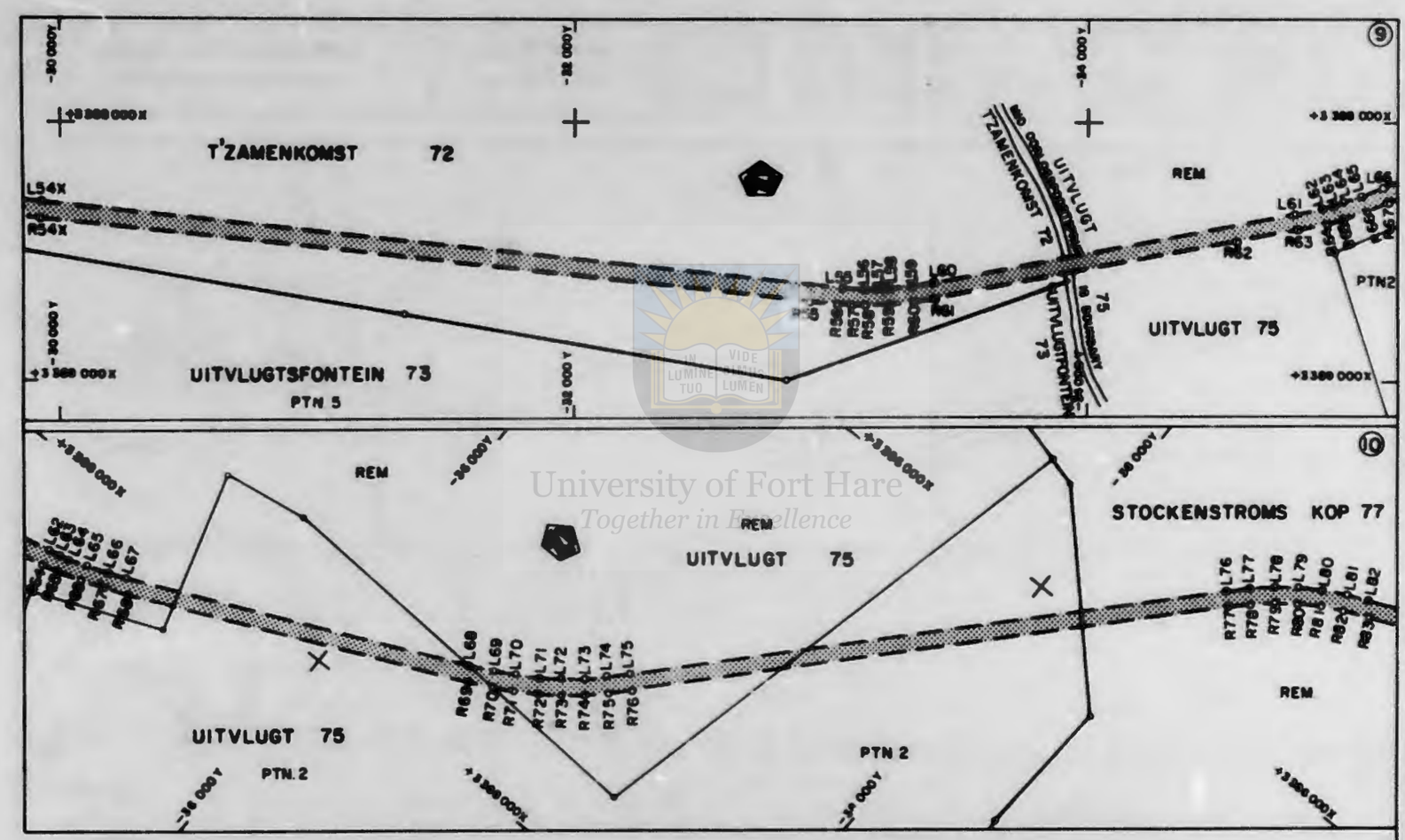

Nasionale Vervoerkommissie National Transport Commission	Die figuur getoon The figure shown	stel die padreserwe voor van 'n gedeelte represents the road reserve of a portion van Nasionale Roete 1 Seksie 12 of National Route 1 Section 12	Vel 5 van 8 Sheet 5 of 8 P 311/80

University of Fort Hare
Together in Excellence

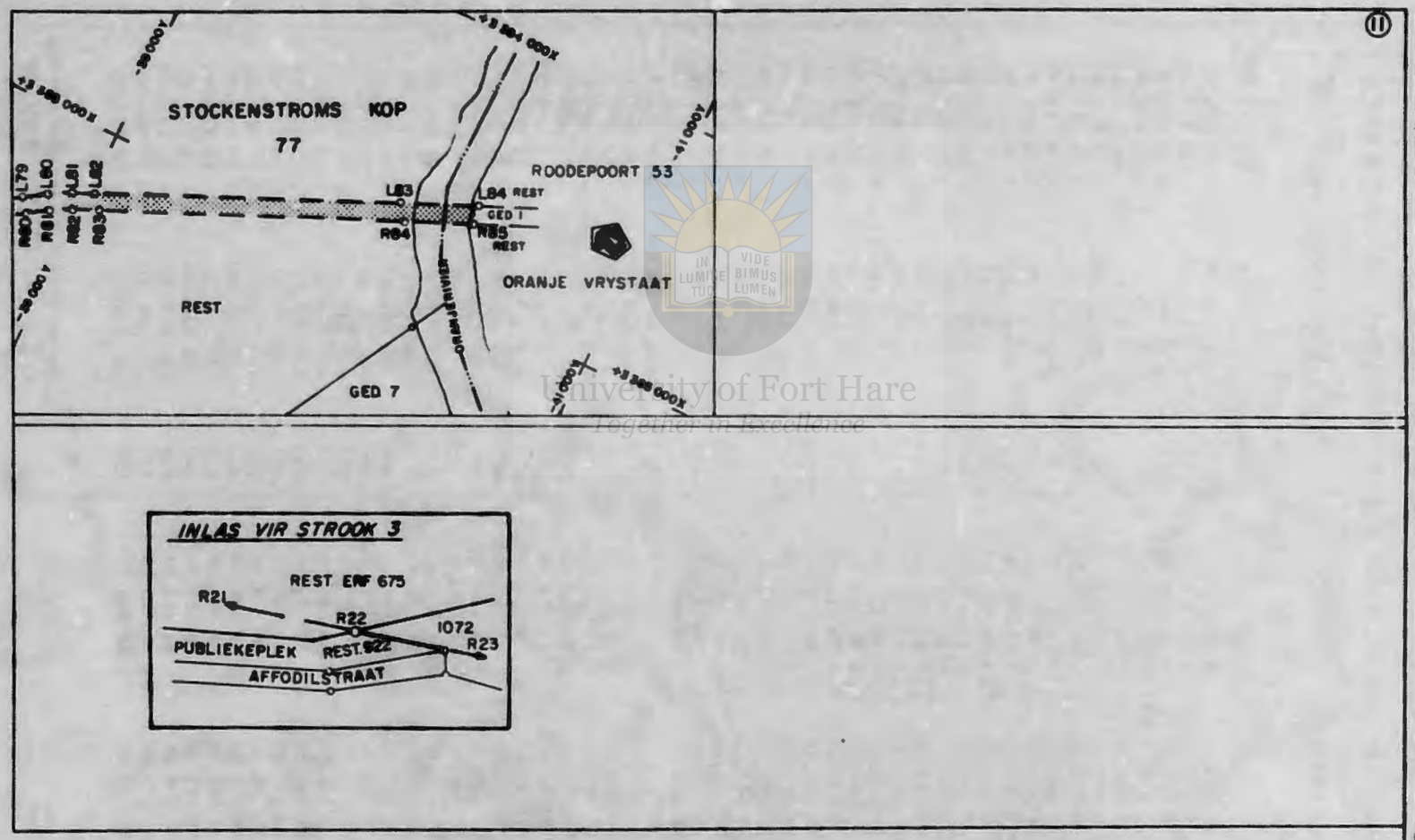

Nasionale Vervoerkommissie National Transport Commission	Die figuur getoon The figure shown	stel die padreserwe voor van 'n gedeelte represents the road reserve of a portion van Nasionale Roete 1 Seksie 12 of National Route 1 Section 12	Vel 6 van 8 Sheet 6 of 8	P 311/80

University of Fort Hare
Together in Excellence

PADRESERWE KOÖRDINATE / ROAD RESERVE CO-ORDINATES

LINKERKANT/ LEFT HAND SIDE			REGTERKANT/ RIGHT HAND SIDE		
	Y	X Lo 25°m		Y	X
Constant	0,00	+3 300 000,00	Konstant	0,00	+3 300 000,00
L1	- 8 205,61	+100 425,38	R1	- 8 362,70	+100 421,70
L2	- 8 197,42	+100 343,60	R2	- 8 437,60	+100 338,40
L3	- 8 172,79	+100 310,85	R3	- 8 474,10	+100 161,90
L4	- 8 192,00	+100 296,40	R4	- 8 516,30	+100 081,40
L5	- 8 212,70	+100 193,80	R5	- 8 549,00	+100 044,00
L6	- 8 406,20	+100 097,80	R6	- 9 613,90	+ 98 872,80
L7	- 8 473,90	+100 046,90	R7	- 9 697,20	+ 98 781,20
L8	- 8 483,10	+100 032,20	R8	- 9 734,10	+ 98 744,90
L9	- 9 604,90	+ 98 798,80	R9	- 9 786,90	+ 98 706,50
L10	- 9 708,50	+ 98 696,00	R10	- 9 864,60	+ 98 663,50
L11	- 9 751,50	+ 98 662,80	R11	- 9 943,18	+ 98 627,16
L12	- 9 807,70	+ 98 629,40	R12	- 9 970,09	+ 98 682,24
L13	- 9 962,00	+ 98 546,90	R13	-10 284,61	+ 98 556,95
L14	-10 063,00	+ 98 435,20	R14	-10 354,16	+ 98 550,04
L15	-10 035,00	+ 98 390,40	R15	-10 349,90	+ 98 506,80
L16	-10 054,09	+ 98 376,50	R16	-10 292,30	+ 98 521,40
L17	-10 083,80	+ 98 417,30	R17	-10 298,80	+ 98 490,20
L18	-10 090,60	+ 98 418,00	R18	-10 308,00	+ 98 465,30
L19	-10 381,56	+ 98 262,86	R19	-10 323,30	+ 98 443,20
L20	-10 393,20	+ 98 284,80	R20	-10 333,80	+ 98 435,30
L21	-10 711,00	+ 98 115,10	R21	-10 501,90	+ 98 326,80
L22	-10 723,10	+ 98 138,10	R22	-10 658,88	+ 98 246,03
L23	-14 440,70	+ 96 177,30	R23	-10 981,35	+ 98 073,41
L24	-14 543,70	+ 96 115,30	R24	-14 364,80	+ 96 291,00
L25	-14 643,00	+ 96 050,40	R25	-14 472,30	+ 96 232,20
L26	-14 741,80	+ 95 979,90	R26	-14 577,50	+ 96 169,30
L27	-14 836,90	+ 95 906,10	R27	-14 678,90	+ 96 103,00
L28	-14 929,10	+ 95 828,60	R28	-14 785,40	+ 96 026,70
L29	-18 703,80	+ 92 565,60	R29	-14 876,90	+ 95 955,70
L30	-18 717,90	+ 92 553,50	R30	-14 970,60	+ 95 876,80
L31	-19 274,90	+ 92 072,10	R31	-18 745,10	+ 92 614,00
L32	-19 335,10	+ 92 021,80	R32	-18 759,60	+ 92 601,50
L33	-19 410,30	+ 91 964,50	R33	-19 374,90	+ 92 070,20
L34	-19 488,00	+ 91 912,60	R34	-19 446,70	+ 92 016,20
L35	-19 569,40	+ 91 864,90	R35	-19 521,90	+ 91 965,90
L36	-19 654,10	+ 91 822,10	R36	-19 599,40	+ 91 920,90
L37	-20 726,60	+ 91 321,99	R37	-19 682,50	+ 91 878,80
L38	-20 807,80	+ 91 282,00	R38	-20 761,60	+ 91 375,70
L39	-25 074,60	+ 89 154,70	R39	-20 865,60	+ 91 329,50
L40	-25 179,80	+ 89 103,60	R40	-20 938,20	+ 91 288,00
L41	-25 264,60	+ 89 065,80	R41	-25 188,30	+ 89 167,10
L42	-25 350,80	+ 89 030,50	R42	-25 207,10	+ 89 161,00
L43	-25 436,60	+ 88 998,10	R43	-25 290,00	+ 89 124,00
L44	-27 521,90	+ 88 219,90	R44	-25 373,80	+ 89 089,80
L45	-27 610,60	+ 88 189,10	R45	-25 458,90	+ 89 057,50
L46	-27 701,00	+ 88 163,80	R46	-27 544,20	+ 88 279,20
L47	-27 793,20	+ 88 143,70	R47	-27 629,60	+ 88 249,80
L48	-27 879,10	+ 88 129,60	R48	-27 716,50	+ 88 225,20
L49	-27 979,80	+ 88 120,10	R49	-27 804,50	+ 88 206,00
L50	-28 073,30	+ 88 116,90	R50	-27 894,20	+ 88 191,90

Vel Sheet 7 van of 8 | P 311/80

University of Fort Hare
Together in Excellence

PADRESERWE KOÖRDINATE / ROAD RESERVE CO-ORDINATES

LINKERKANT/LEFT HAND SIDE			REGTERKANT/RIGHT HAND SIDE		
	Y	X Lo 25°m		Y	X
Constant	0,00	+3 300 000,00	Konstant	0,00	+3 300 000,00
L51	-28 118,00	+ 88 118,10	R51	-27 983,80	+ 88 183,30
L52	-28 161,80	+ 88 119,90	R52	-28 058,70	+ 88 179,90
L53	-28 289,70	+ 88 129,30	R53	-28 137,80	+ 88 183,50
L54	-28 352,10	+ 88 137,20	R54	-28 790,20	+ 88 248,60
L55	-33 046,40	+ 88 643,10	R55	-32 919,10	+ 88 695,20
L56	-33 134,70	+ 88 645,50	R56	-33 024,20	+ 88 705,50
L57	-33 174,30	+ 88 644,90	R57	-33 080,20	+ 88 707,80
L58	-33 225,00	+ 88 642,80	R58	-33 136,00	+ 88 709,20
L59	-33 312,40	+ 88 634,10	R59	-33 227,90	+ 88 706,10
L60	-33 400,60	+ 88 620,60	R60	-33 320,50	+ 88 697,40
L61	-34 807,00	+ 88 352,70	R61	-33 411,60	+ 88 683,20
L62	-34 912,70	+ 88 329,50	R62	-34 583,20	+ 88 460,10
L63	-34 960,20	+ 88 316,40	R63	-34 818,70	+ 88 415,00
L64	-34 998,00	+ 88 305,10	R64	-34 931,90	+ 88 390,60
L65	-35 064,90	+ 88 283,30	R65	-34 992,20	+ 88 373,40
L66	-35 148,60	+ 88 251,60	R66	-35 086,50	+ 88 342,90
L67	-35 216,40	+ 88 222,00	R67	-35 172,90	+ 88 310,30
L68	-36 464,40	+ 87 649,02	R68	-35 267,20	+ 88 268,80
L69	-36 556,80	+ 87 604,10	R69	-36 503,60	+ 87 700,80
L70	-36 634,10	+ 87 560,40	R70	-36 594,50	+ 87 655,50
L71	-36 708,70	+ 87 513,00	R71	-36 667,10	+ 87 614,70
L72	-36 780,10	+ 87 459,30	R72	-36 746,30	+ 87 567,10
L73	-36 848,20	+ 87 402,80	R73	-36 819,40	+ 87 509,50
L74	-36 912,90	+ 87 342,00	R74	-36 890,60	+ 87 450,00
L75	-36 974,90	+ 87 277,10	R75	-36 958,00	+ 87 386,90
L76	-38 572,90	+ 85 557,90	R76	-37 021,50	+ 87 320,00
L77	-38 638,20	+ 85 491,00	R77	-38 619,10	+ 85 601,30
L78	-38 710,00	+ 85 427,40	R78	-38 681,80	+ 85 536,30
L79	-38 784,20	+ 85 371,20	R79	-38 748,60	+ 85 475,70
L80	-38 864,10	+ 85 318,90	R80	-38 820,80	+ 85 422,10
L81	-38 946,90	+ 85 273,60	R81	-38 896,80	+ 85 373,00
L82	-39 023,60	+ 85 238,60	R82	-38 975,90	+ 85 330,10
L83	-40 096,60	+ 84 755,10	R83	-39 068,00	+ 85 287,40
L84	-40 367,52	+ 84 634,48	R84	-40 144,30	+ 84 813,40
			R85	-40 381,18	+ 84 705,02
L8X	- 8 958,80	+ 99 509,17	R5X	- 8 999,73	+ 99 548,28
L22X	-10 959,26	+ 98 013,54	R30X	-16 370,17	+ 94 666,96
L23X	-12 052,53	+ 97 436,91	R37X	-20 316,94	+ 91 583,01
L28X	-16 328,67	+ 94 618,76	R23X	-12 082,85	+ 97 493,14
L36X	-20 288,52	+ 91 526,27	R40X	-24 875,13	+ 89 323,38
L38X	-24 850,87	+ 89 266,25	R54X	-29 913,65	+ 88 370,12
L54X	-29 913,06	+ 88 305,42			

Vel Sheet 8 van of 8 | P 311 / 80

University of Pretoria
Toward an Excellence

No. 167, 1980

VERKLARING VAN GROEPSGEBIEDE INGEVOLGE DIE WET OP GROEPSGEBIEDE, 1966, TE SOMERSET-OOS, DISTRIK SOMERSET-OOS, PROVINSIE DIE KAAP DIE GOEIE HOOP

Kragtens artikel 23 van die Wet op Groepsgebiede, 1966 (Wet 36 van 1966), verklaar ek hierby dat—

(i) die gebied omskryf in paragraaf (a) van die Bylae hiervan, vanaf die datum van publikasie hiervan, 'n gebied is vir okkupasie en grondbesit deur lede van die Blanke groep; en

(ii) die gebied omskryf in paragraaf (b) van die Bylae hiervan, vanaf die datum van publikasie hiervan, 'n gebied is vir okkupasie en grondbesit deur lede van die Gekleurde groep.

Gegee onder my Hand en die Seël van die Republiek van Suid-Afrika te Pretoria, op hede die Negentiende dag van Augustus Eenduisend Negehonderd-en-tagtig.

M. VILJOEN, Staatspresident.

Op las van die Staatspresident-in-rade:

S. J. M. STEYN.

BYLAE

BLANKE GROEP

(a) Erwe 1223, 1224 en 1225, Somerset-Oos, in hulle geheel.

GEKLEURDE GROEP

(b) Vanaf Baken X op Meetstuk E471/80 suidoos reguit tot by Baken Y op genoemde meetstuk; dan algemeen suidoos met die grense van Erf 867, Somerset-Oos, langs, sodat dit uit hierdie gebied uitgesluit word, tot by Baken Q1 op die kaart van genoemde erf; dan noordwes en suidwes met die grense van Erf 1 langs tot by Baken W1 op die kaart van Gedeelte 41 van die plaas Doorn Kraal 117, administratiewe distrik Somerset-Oos; dan noord reguit tot by eersgenoemde baken.

No. 167,1980

DECLARATION OF GROUP AREAS IN TERMS OF THE GROUP AREAS ACT, 1966, AT SOMERSET EAST, DISTRICT OF SOMERSET EAST, PROVINCE OF THE CAPE OF GOOD HOPE

Under section 23 of the Group Areas Act, 1966 (Act 36 of 1966), I hereby declare that—

(i) the area defined in paragraph (a) of the Schedule hereto shall, as from the date of publication hereof, be an area for occupation and ownership by members of the White group; and

(ii) the area defined in paragraph (b) of the Schedule hereto shall, as from the date of publication hereof, be an area for occupation and ownership by members of the Coloured group.

Given under my Hand and the Seal of the Republic of South Africa at Pretoria this Nineteenth day of August, One thousand Nine hundred and Eighty.

M. VILJOEN, State President.

By Order of the State President-in-Council:

S. J. M. STEYN.

SCHEDULE

WHITE GROUP

(a) Erven 1223, 1224 and 1225, Somerset East, in their entirety.

COLOURED GROUP

(b) From Beacon X on Survey Record E471/80 south-eastwards in a straight line to Beacon Y on the said survey record; thence generally south-eastwards along the boundaries of Erf 867, Somerset East, so as to exclude it from this area, to Beacon Q1 on the diagram of the said erf; thence north-westwards and south-westwards along the boundaries of Erf 1 to Beacon W1 on the diagram of Portion 41 of the farm Doorn Kraal 117, Administrative District of Somerset East; thence northwards in a straight line to the beacon first mentioned.

No. 163, 1980

VERKLARING VAN 'N NASIONALE PAD.—WYSIGING VAN DEEL B VAN DIE BYLAE BY PROKLAMASIE 236 VAN 1972—PROVINSIE NATAL

Kragtens artikel 4 (1) (a) van die Wet op Nasionale Paaie, 1971 (Wet 54 van 1971), soos gewysig, verklaar ek hierby dat die roete wat in Deel A van die bygaande Bylae beskryf word, 'n nasionale pad is, en kragtens artikel 4 (1) (c) van genoemde Wet, wysig ek hierby Deel B van die Bylae by Proklamasie 236 van 1972 deur daarin die betrokke gedeelte van die roete wat in Deel B van die bygaande Bylae beskryf word, in te trek.

Gegee onder my Hand en die Seël van die Republiek van Suid-Afrika te Pretoria, op hede die Negentiende dag van Augustus Eenduisend Negehonderd-en-tagtig.

M. VILJOEN, Staatspresident.

Op las van die Staatspresident-in-rade:

J. C. HEUNIS.

No. 163, 1980

DECLARATION OF A NATIONAL ROAD.—AMENDMENT OF PART B OF THE SCHEDULE TO PROCLAMATION 236 OF 1972—PROVINCE OF NATAL

In terms of section 4 (1) (a) of the National Roads Act, 1971 (Act 54 of 1971), as amended, I hereby declare that the route described in Part A of the Schedule hereto shall be a national road and in terms of section 4 (1) (c) of the said Act, I hereby amend Part B of the Schedule to Proclamation 236 of 1972 by repealing therefrom the relevant section of the route as described in Part B of the Schedule hereto.

Given under my Hand and the Seal of the Republic of South Africa at Pretoria on this Nineteenth day of August, One thousand Nine hundred and Eighty.

M. VILJOEN, State President.

By Order of the State President-in-Council:

J. C. HEUNIS.

University of Fort Hare
Together in Excellence

BYLAE

DEEL A

PROVINSIE NATAL

Beskrywing van roete

'n Roete, soos aangedui op bygaande Plan P310/79, wat begin op Murrayweg van die Restant van Townlands of Pietermaritzburg 1687 en daarvandaan loop oor genoemde pad; 1/1186, 1/1414, Restant/2/1186, Restant van Townlands of Pietermaritzburg 1687, 1444, B/601, Restant/601, Durbanweg, 80/175, Blackburrowweg, 5(pad)/560, D/560, 1/C/560, 5(pad)/160, 2/B/160, D/160, 1/C/160, 58/33/554, 1(pad)/E/606, New Englandweg, 1(pad)/639, 1(pad)/642, 1(pad)/678, 1(pad)/838, 1(pad)/1078, 1/681, Restant/71, 88(pad)/71, 86/71, 2/978, Milton 2593, Restant/1512, Restant van Gekonsolideerde Perseel 1262, Fitzsimmonsweg, Greytownweg, A/5/A/201, 3/A/201, 4/A/201, 13/A/201, 6/192, 3/192, 5/192, Restant/192, 991, Restant/330, 12/4/355, 6/4/355, 11/4/355, Restant/4/355, Restant/938, 1/938, B/379, Restant/A/379, Restant/379, 1327, 13/355, 1328, C/349, 1329, 14/355, 1/595, 1330, A/51, 19/NGR/355, Restant/NGR/355, 25/15/355, Restant/15/355, 1331, Restant/2/547, 1/237, Sanctuaryweg(Restant/1687), 1556, Restant/190, 1297, 12/468, 1/341, 7/305, 1298, 1/119, 14/4/1031, Restant/Northern Park, Remainder/580, 1/D/580, 1/D/57, B/57, 1/A/580, Town Bushweg, 1/688, Restant/3/93, D/93, 2/A/93, 38(pad)/A/93, 5/123, 1/123, Restant/1531, Restant/697, A/1/697, 2/718, Restant/718, 12/718, A/6/718, A/7/718, 18/8/718, 1/10/718, 1/5/718, 4/718, 1 van Gekonsolideerde Perseel 705, A/4/700, 2(pad)/700, A/3/700, Onderverdeling (pad) van Perseel 704, 2/704, 5/Montrose, 7(pad)/Montrose, Restant/1/8/Montrose, Restant/8/Montrose, 7/6/Montrose 2/6/Montrose, 1/6/Montrose, B(pad)/2/Montrose, B(pad)/1/Montrose, Restant/14/Montrose, 9/Montrose, Restant/4/Montrose, 2(pad)/4/Montrose, 1(pad)/4/Montrose, Restant/3/Montrose, 1(pad)/3/Montrose, 12/4/102, 1(pad)/B/102, Restant/102, 3(pad)/102, 10/102, 5/102, 1(pad)/791, 1/789, Restant/789, 788, 787, 786, 785, SAR/6, SAR/2 en SAR/3, waar dit eindig ('n totale afstand van ongeveer 17,1 km).

(Nasionale Roete: Pietermaritzburgse Verbypad, distrik Pietermaritzburg.)

BYLAE

DEEL B

PROVINSIE NATAL

Beskrywing van pad

Die dorpsgrond van Pietermaritzburg, Persele 601, 175, 560, 160, 639, 642, 678, 838, 1022, 1078, 681, 430, 91A, 71 en 103, die Umzindusirivier, Perseel 978, Ortmannweg, Perseel 1024, Fitzsimmonsweg, Greytownweg, Persele 355, 547, 237, 246, 190, 196, 197, 305, 341, 390, 463, 468, die Voëlasiel, Chase Valleyweg, Northern Park, Persele 580 en 57, Allertonweg, Persele 202, 93, en 123, genoemde dorpsgrond, County Pietermaritzburg.

(Nasionale Roete Kirkman–Mooirivier.)

SCHEDULE

PART A

PROVINCE OF NATAL

Description of route

A route, as indicated on the attached Plan P310/79, commencing on Murray Road of the Remainder of Townlands of Pietermaritzburg 1687 and thence proceeding over the said road; 1/1186, 1/1414, Remainder/2/1186, Remainder of Townlands of Pietermaritzburg 1687, 1444, B/601, Remainder/601, Durban Road, 80/175, Blackburrow Road, 5(Road)/560, D/560, 1/C/560, 5(Road)/160, 2/B/160, D/160, 1/C/160, 58/33/554, 1(Road)/E/606, New England Road, 1(Road)/639, 1(Road)/642, 1(Road)/678, 1(Road)/838, 1(Road)/1078, 1/681, Remainder/71, 88(Road)/71, 86/71, 2/978, Milton 2593, Remainder/1512, Remainder of Consolidated Lot 1262, Fitzsimmons Road, Greytown Road, A/5/A/201, 3/A/201, 4/A/201, 13/A/201, 6/192, 3/192, 5/192, Remainder/192, 991, Remainder/330, 12/4/355, 6/4/355, 11/4/355, Remainder/4/355, Remainder/938, 1/938, B/379, Remainder/A/379, Remainder/379, 1327, 13/355, 1328, C/349, 1329, 14/355, 1/595, 1330, A/51, 19/NGR/355, Remainder/NGR/355, 25/15/355, Remainder/15/355, 1331, Remainder/2/547, 1/237, Sanctuary Road (Remainder/1687), 1556, Remainder/190, 1297, 12/468, 1/341, 7/305, 1298, 1/119, 14/4/1031, Remainder/Northern Park, Remainder/580, 1/D/580, 1/D/57, B/57, 1/A/580, Town Bush Road, 1/688, Remainder/3/93, D/93, 2/A/93, 38(Road)/A/93, 5/123, 1/123, Remainder/1531, Remainder/697, A/1/697, 2/718, Remainder/718, 12/718, A/6/718, A/7/718, 18/8/718, 1/10/718, 1/5/718, 4/718, 1 of Consolidated Lot 705, A/4/700, 2(Road)/700, A/3/700, Subdivision (Road) of Lot 704, 2/704, 5/Montrose, 7(Road)/Montrose, Remainder/1/8/Montrose, Remainder/8/Montrose, 7/6/Montrose, 2/6/Montrose, 1/6/Montrose, B(Road)/2/Montrose, B(Road)/1/Montrose, Remainder/14/Montrose, 9/Montrose, Remainder/4/Montrose, 2(Road)/4/Montrose, 1(Road)/4/Montrose, Remainder/3/Montrose, 1(Road)/3/Montrose, 12/4/102, 1(Road)/B/102, Remainder/102, 3(Road)/102, 10/102, 5/102, 1(Road)/791, 1/789, Remainder/789, 788, 787, 786, 785, SAR/6, SAR/2 and SAR/3, where it terminates (a total distance of about 17,1 km).

(National Route: Pietermaritzburg Bypass, District of Pietermaritzburg.)

SCHEDULE

PART B

PROVINCE OF NATAL

Description of Road

Pietermaritzburg Townlands, Lots 601, 175, 560, 160, 639, 642, 678, 838, 1022, 1078, 681, 430 91A, 71 and 103, the Umzindusi River, Lot 978, Ortmann Road, Lot 1024, Fitzsimmons Road, Greytown Road, Lots 355, 547, 237, 246, 190, 196, 197, 305, 341, 390, 463, 468, the Bird Sanctuary, Chase Valley Road, Northern Park, Lots 580 and 57, Allerton Road, Lots 202, 93 and 123, the said Townlands, Pietermaritzburg County.

(National Route Kirkman–Mooi River.)

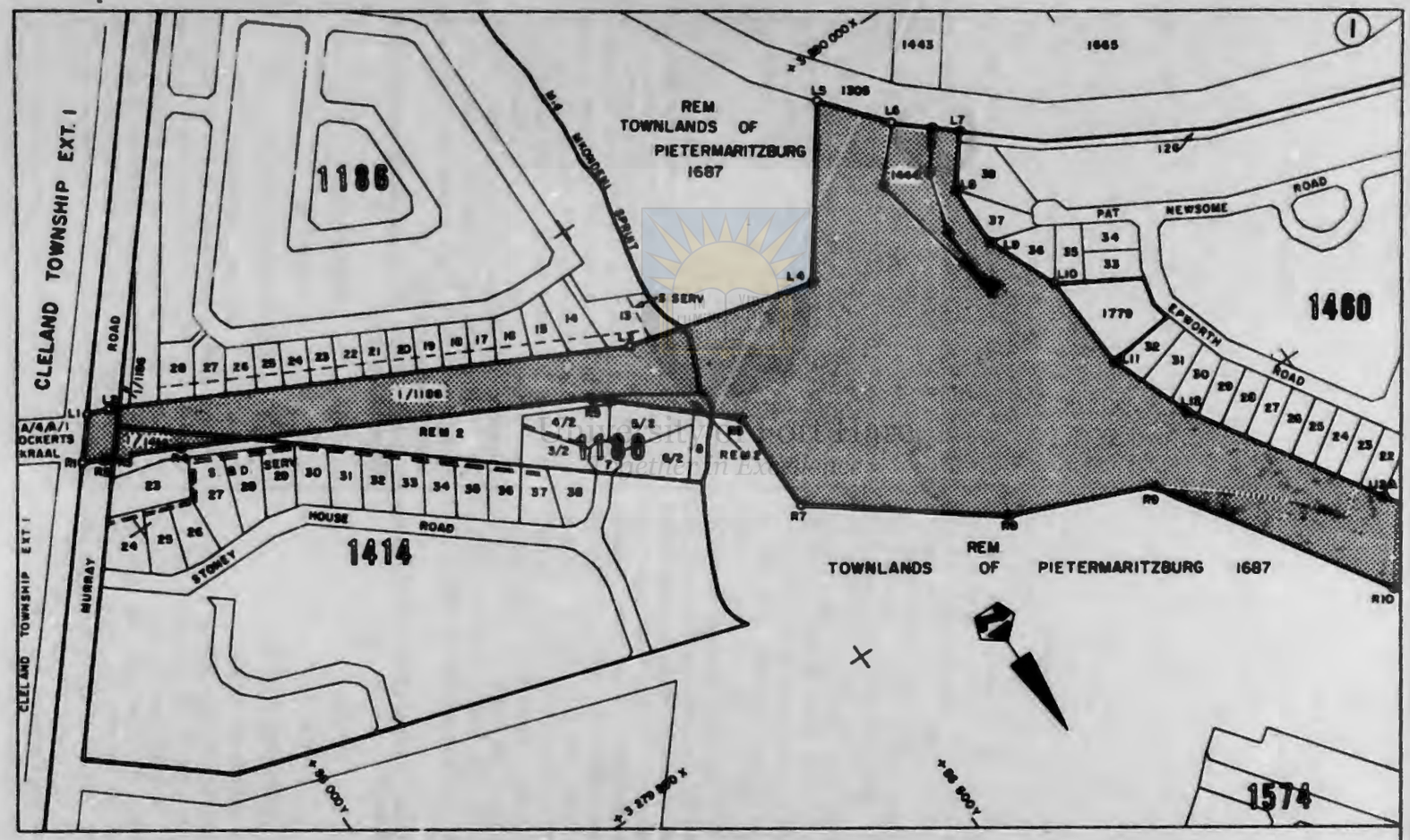

Nasionale Vervoerkommissie National Transport Commission	Die figuur getoon The figure shown	stel die padreserwe voor van 'n gedeelte represents the road reserve of a portion van Nasionale Roete 3 Seksie 3 of National Route 3 Section 3	Vel 1 van 15 Sheet 1 of 15 P 310/79

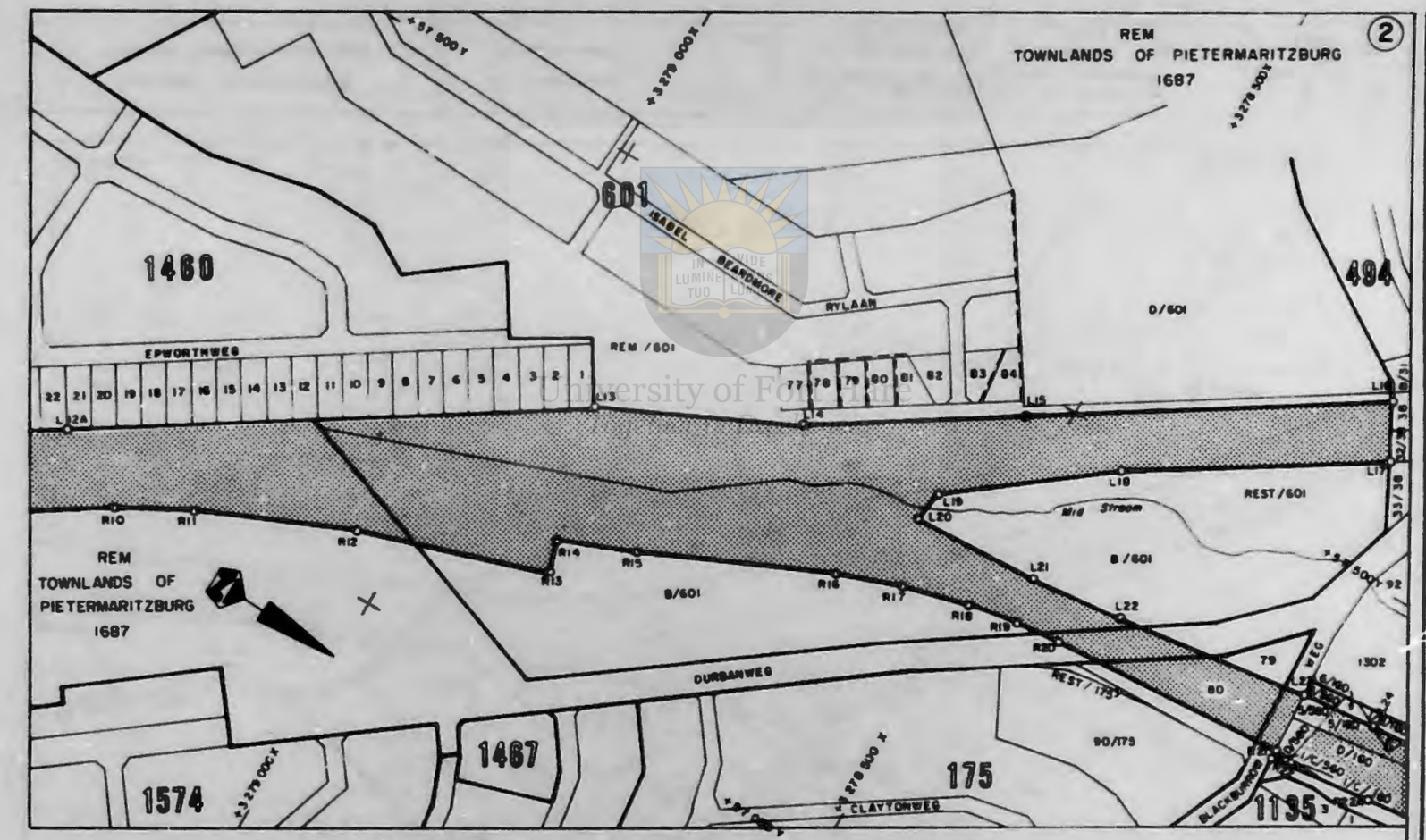

Nasionale Vervoerkommissie National Transport Commission	Die figuur getoon The figure shown	stel die padreserwe voor van 'n gedeelte represents the road reserve of a portion van Nasionale Roete 3 Seksie 3 of National Route 3 Section 3	Vel 2 van 15 Sheet 2 of 15 P 310/79

University of Fort Hare

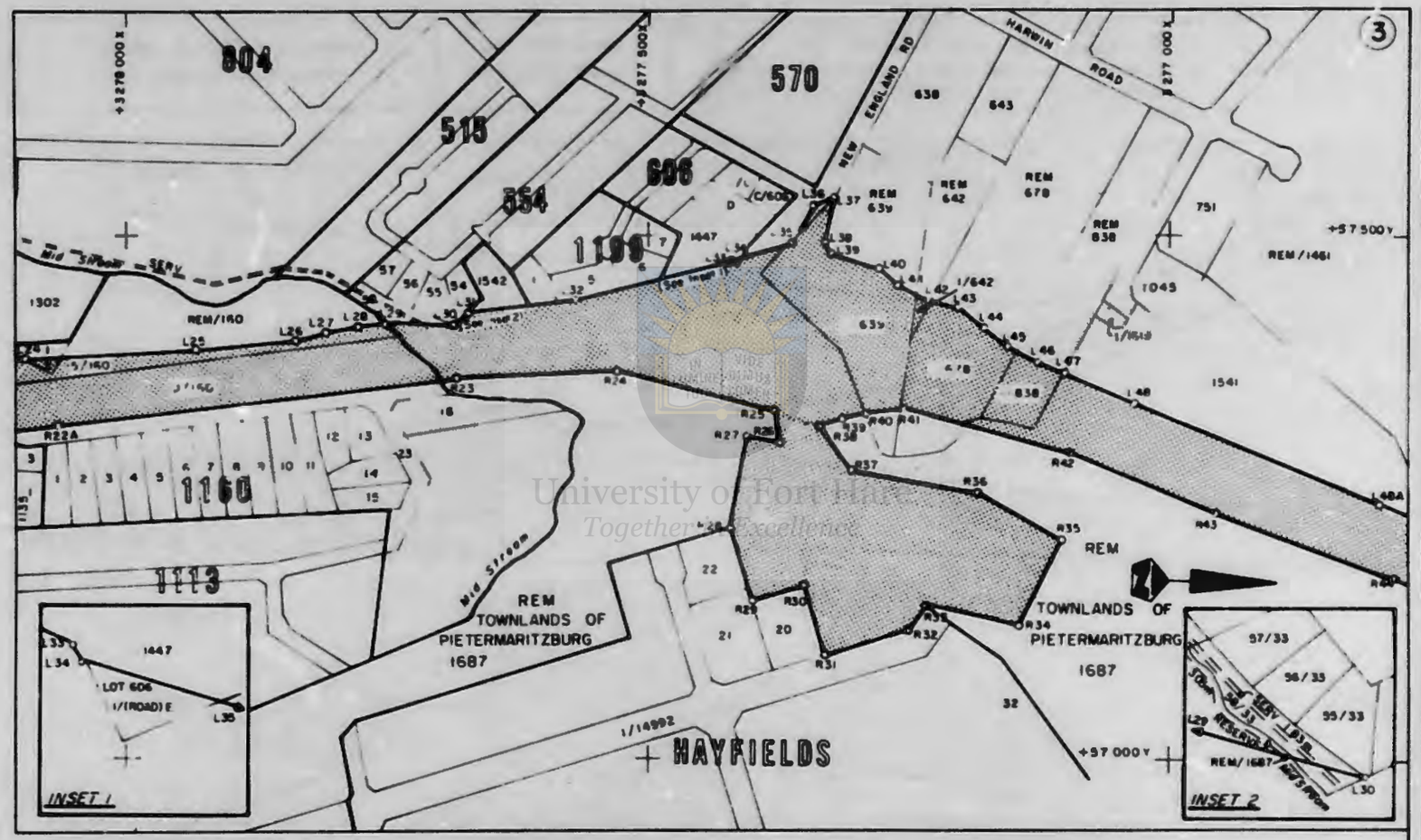

Nasionale Vervoerkommissie National Transport Commission	Die figuur getoon The figure shown	stel die padreserwe voor van 'n gedeelte represents the road reserve of a portion van Nasionale Roete 3 Seksie 3 of National Route Section	Vel 3 van 15 Sheet of P 310/79

University of Fort Hare
Together in Excellence

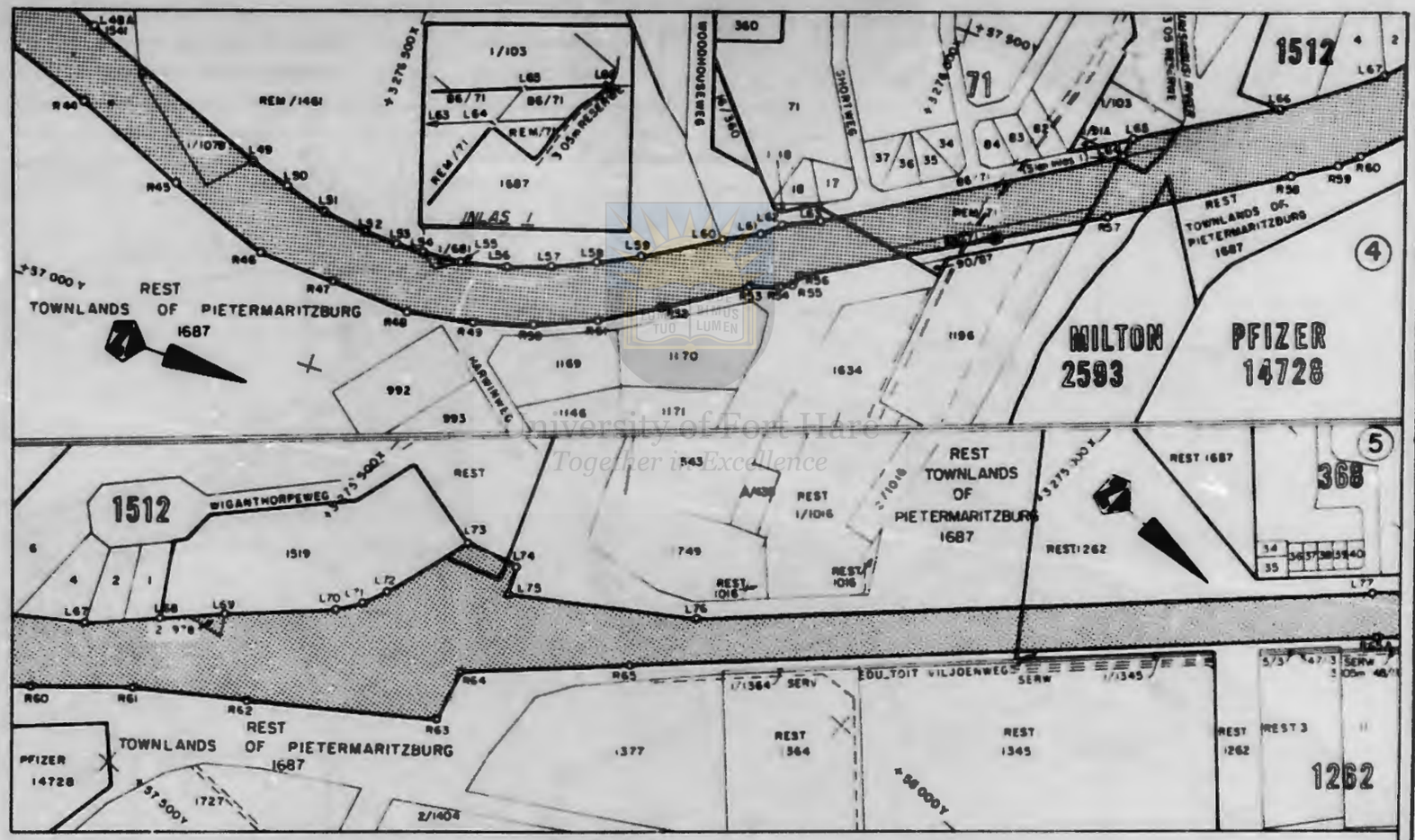

Nasionale Vervoerkommissie National Transport Commission	Die figuur getoon The figure shown	stel die padreserwe voor van 'n gedeelte represents the road reserve of a portion van Nasionale Roete 3 Seksie 3 of National Route 3 Section 3	Vel 4 van 15 Sheet 4 of 15 P 310/79

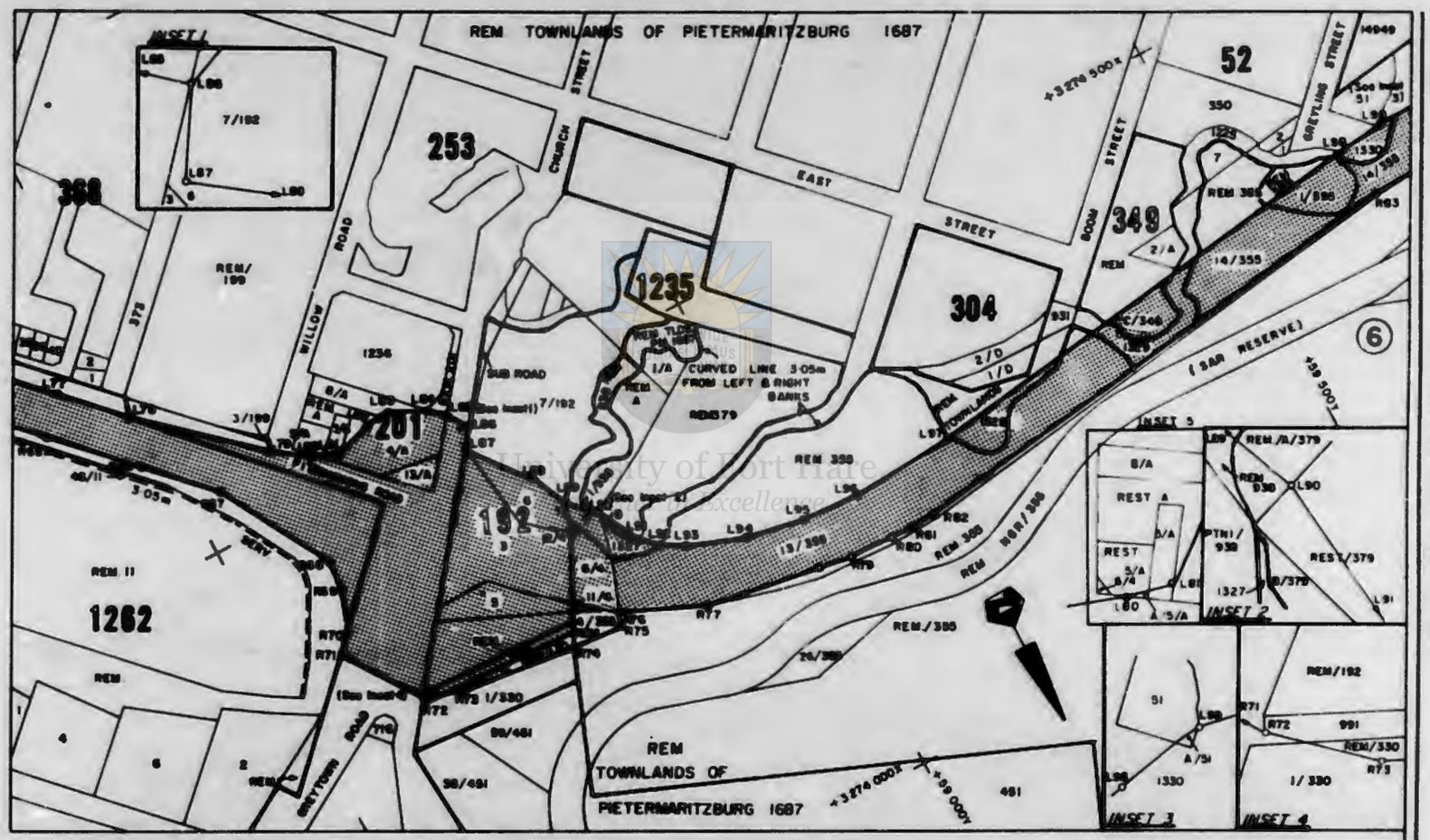

Nasionale Vervoerkommissie National Transport Commission	Die figuur getoon The figure shown	stel die padreserwe voor van 'n gedeelte represents the road reserve of a portion van Nasionale Roete 3 Seksie 3 of National Route 3 Section 3	Vel 5 van 15 Sheet 5 of 15 P 310/79

University of Pretoria
Quality in Excellence

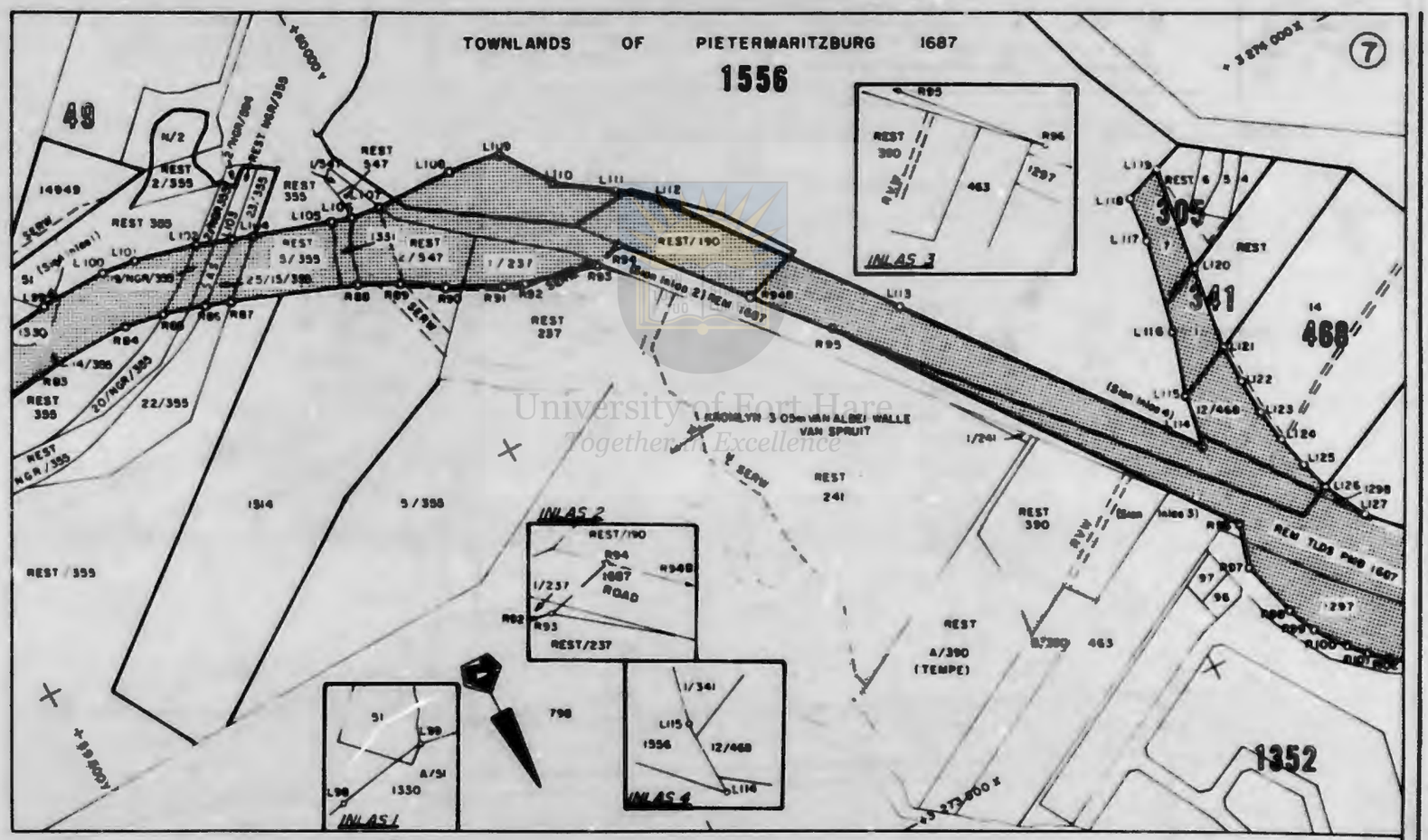

Nasionale Vervoerkommissie National Transport Commission	Die figuur getoon The figure shown	stel die padreserwe voor van 'n gedeelte represents the road reserve of a portion van Nasionale Roete 3 Seksie 3 of National Route 3 Section 3	Vel 6 van 15 Sheet 6 of 15	P 310/79

University of Fort Hare
Together in Excellence

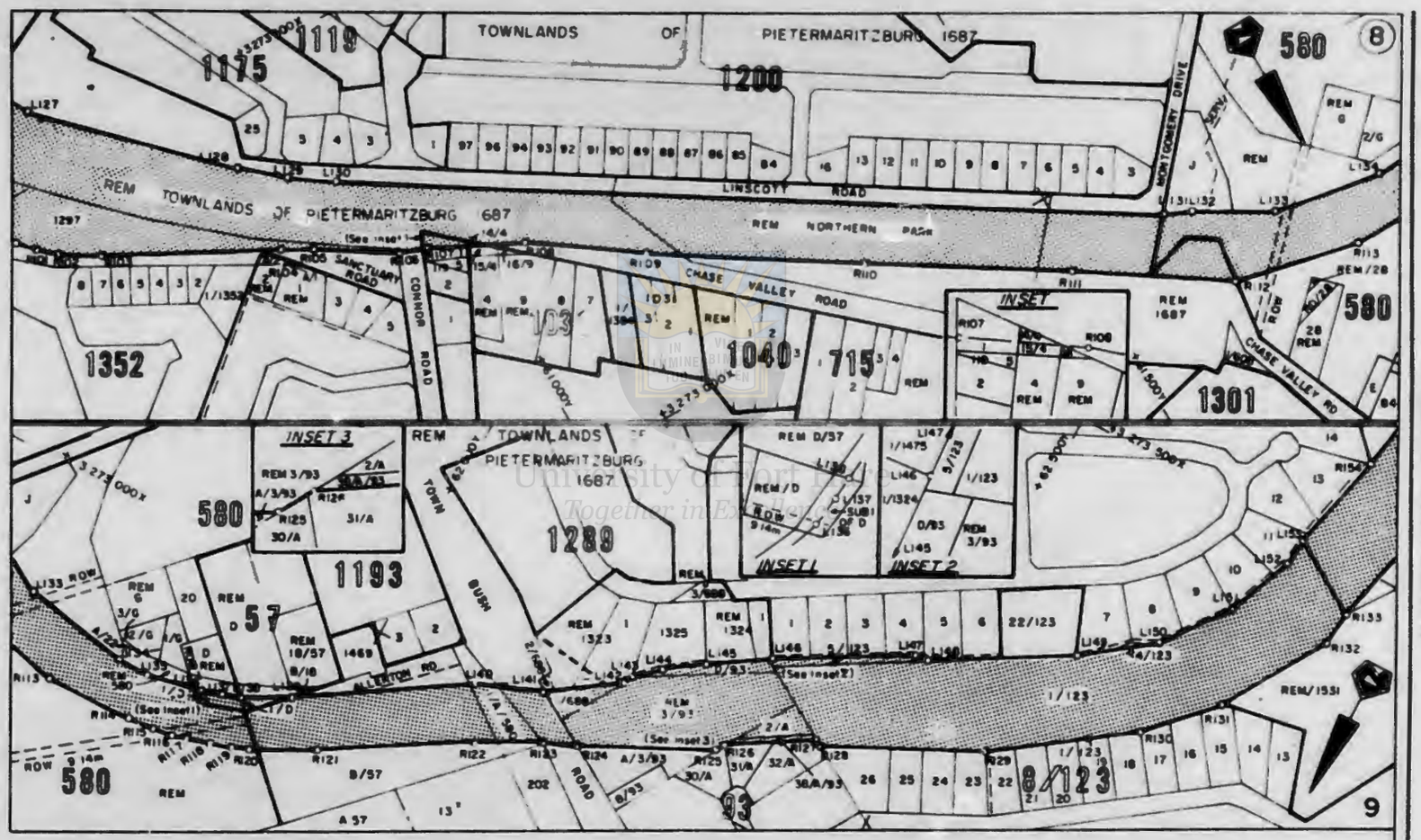

Nasionale Vervoerkommissie National Transport Commission	Die gebiede getoon The areas shown	stel die padreserwe voor van 'n gedeelte represents the road reserve of a portion van Nasionale Roete 3 Seksie 3 of National Route 3 Section 3	Vel 7 van 15 Sheet 7 of 15 P 310/79

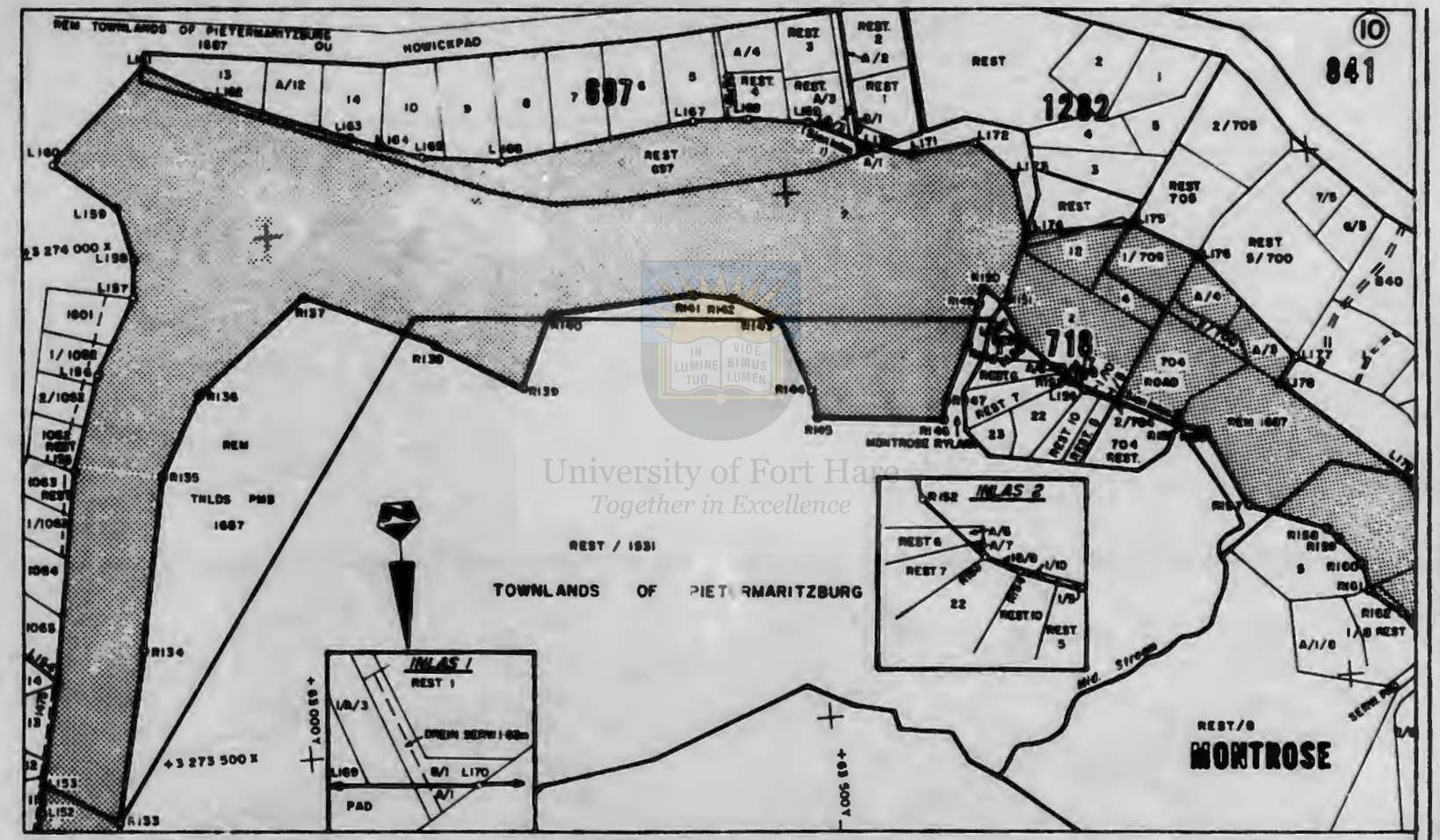

Nasionale Vervoerkommissie National Transport Commission	Die figuur getoon The figure shown	stel die padreserwe voor van 'n gedeelte represents the road reserve of a portion van Nasionale Roete 3 Seksie 3 of National Route 3 Section 3	Vel 8 van 15 Sheet 8 of 15 P 310/79

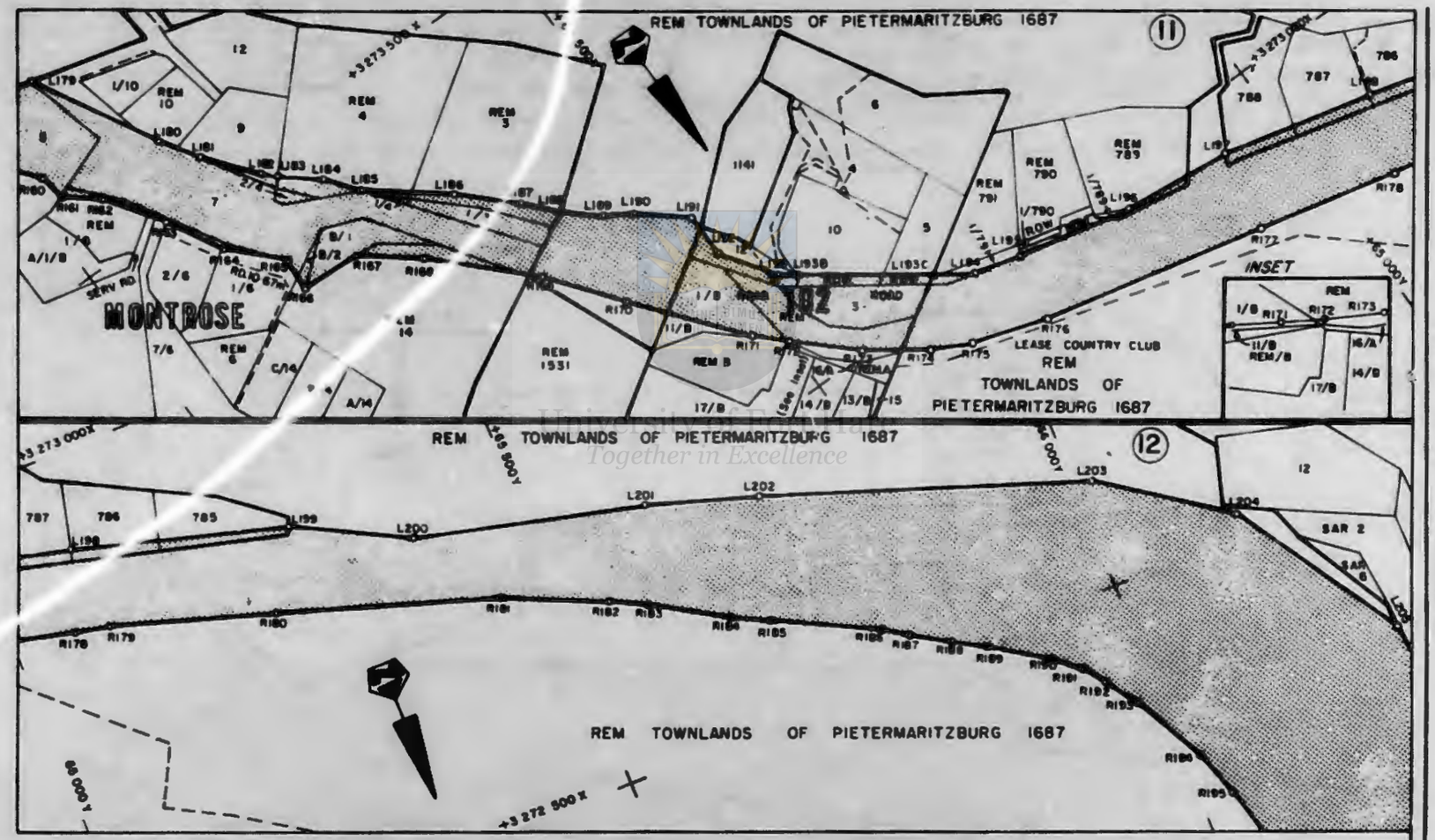

Nasionale Vervoerkommissie National Transport Commission	Die figuur getoon The figure shown	stel die padreserwe voor van 'n gedeelte represents the road reserve of a portion van Nasionale Roete 3 Seksie 3 of National Route 3 Section 3	Vel 9 van 15 Sheet 9 of 15	P 310/79

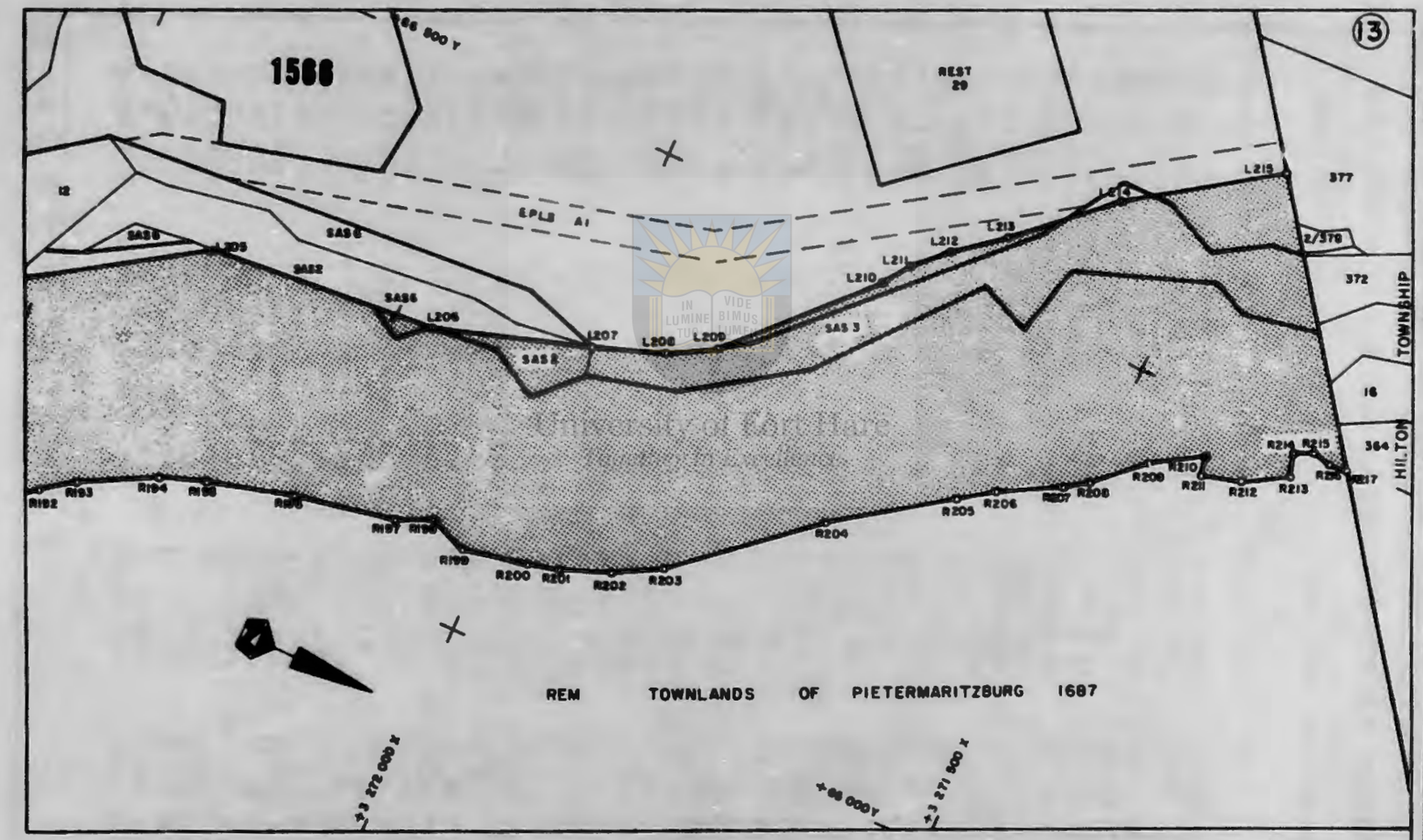

Nasionale Vervoerkommissie National Transport Commission	Die figuur getoon The figure shown	stel die padreserwe voor van 'n gedeelte represents the road reserve of a portion van Nasionale Roete 3 Seksie 3 of National Route 3 Section 3	Vel 10 van 15 Sheet 10 of 15 P 310/79

PADRESERWE KOÖRDINATE / ROAD RESERVE CO-ORDINATES

LINKERKANT/ LEFT HAND SIDE			REGTERKANT/ RIGHT HAND SIDE		
	Y	X Lo 31°m		Y	X
Constant	0,00	+3 000 000,00	Konstant	0,00	+3 000 000,00
L1	+56 021,36	+280 120,49	R1	+55 990,86	+280 084,97
L2	+56 042,04	+280 112,33	R2	+56 009,63	+280 074,94
L3	+56 488,31	+279 872,27	R3	+56 018,27	+280 070,09
L4	+56 667,66	+279 819,94	R4	+56 075,98	+280 042,36
L5	+56 771,44	+279 962,07	R5	+56 425,97	+279 854,00
L6	+56 817,08	+279 904,04	R6	+56 536,56	+279 754,42
L7	+56 866,68	+279 859,86	R7	+56 535,93	+279 652,22
L8	+56 831,58	+279 815,17	R8	+56 694,93	+279 529,41
L9	+56 830,06	+279 754,82	R9	+56 826,00	+279 471,53
L10	+56 857,79	+279 68[illegible],16	R10	+56 957,79	+279 260,56
L11	+56 862,31	+279 592,54	R11	+56 993,69	+279 192,90
L12	+56 892,46	+279 512,20	R12	+57 055,21	+279 045,96
L13	+57 273,07	+278 904,02	R13	+57 114,70	+278 862,20
L14	+57 358,89	+278 721,03	R14	+57 144,52	+278 872,23
L15	+57 473,50	+278 539,93	R15	+57 172,56	+278 800,52
L16	+57 660,81	+278 239,27	R16	+57 250,28	+278 621,92
L17	+57 610,59	+278 212,32	R17	+57 271,27	+278 560,93
L18	+57 473,27	+278 432,15	R18	+57 287,78	+278 495,65
L19	+57 366,11	+278 575,11	R19	+57 296,46	+278 446,12
L20	+57 336,30	+278 579,53	R20	+57 300,60	+278 402,10
L21	+57 341,61	+278 453,94	R21	+57 314,17	+278 168,06
L22	+57 350,46	+278 362,15	R22	+57 306,18	+278 167,71
L23	+57 375,44	+278 170,74	R23	+57 363,63	+277 683,74
L24	+57 382,25	+278 097,94	R24	+57 370,45	+277 530,37
L25	+57 391,05	+277 934,15	R25	+57 332,29	+277 378,19
L26	+57 400,07	+277 839,02	R26	+57 301,60	+277 373,82
L27	+57 406,74	+277 808,97	R27	+57 308,19	+277 405,19
L28	+57 412,27	+277 778,86	R28	+57 221,13	+277 421,23
L29	+57 414,83	+277 751,38	R29	+57 151,21	+277 400,23
L30	+57 414.43	+277 686,90	R30	+57 166,17	+277 350,43
L31	+57 426,19	+277 673,90	R31	+57 099,13	+277 330,29
L32	+57 438,56	+277 569,61	R32	+57 122,86	+277 251,28
L33	+57 475,07	+277 421,57	R33	+57 147,88	+277 233,94
L34	+57 474,39	+277 420,40	R34	+57 127,91	+277 144,28
L35	+57 493,64	+277 362,89	R35	+57 209,50	+277 103,22
L36	+57 528,06	+277 341,94	R36	+57 254,10	+277 184,01
L37	+57 536,33	+277 321,26	R37	+57 275,12	+277 305,19
L38	+57 494,46	+277 330,60	R38	+57 317,80	+277 335,00
L39	+57 482,63	+277 323,92	R39	+57 325,18	+277 314,21
L40	+57 467,70	+277 279,25	R40	+57 331,07	+277 291,18
L41	+57 452,51	+277 259,61	R41	+57 334,45	+277 254,23
L42	+57 438,13	+277 233,39	R42	+57 291,90	+277 094,55
L43	+57 431,26	+277 203,80	R43	+57 234,67	+276 954,67
L44	+57 412,77	+277 177,63	R44	+57 172,59	+276 784,99
L45	+57 394,20	+277 154,60	R45	+57 125,87	+276 677,42
L46	+57 380,50	+277 127,06	R46	+57 088,38	+276 578,65
L47	+57 368,39	+277 101,22	R47	+57 083,89	+276 503,35
L48	+57 340,75	+277 033,53	R48	+57 077,75	+276 427,34
L49	+57 168,63	+276 613,31	R49	+57 088,70	+276 364,30
L50	+57 156,27	+276 574,36	R50	+57 104,52	+276 307,45

Vel Sheet 11 van of 15 P 310/79

University of Fort Hare
Together in Excellence

PADRESERWE KOÖRDINATE / ROAD RESERVE CO-ORDINATES

LINKERKANT/ LEFT HAND SIDE			REGTERKANT/ RIGHT HAND SIDE		
	Y	X Lo 31 °m		Y	X
Constant	0,00	+3 000 000,00	Konstant	0,00	+3 000 000,00
L51	+57 144,25	+276 533,02	R51	+57 127,31	+276 250,36
L52	+57 138,23	+276 488,55	R52	+57 158,36	+276 195,28
L53	+57 136,99	+276 458,27	R53	+57 203,28	+276 121,60
L54	+57 137,48	+276 431,22	R54	+57 212,36	+265 092,70
L55	+57 139,94	+276 392,80	R55	+57 218,03	+276 082,78
L56	+57 149,02	+276 349,18	R56	+57 228,79	+276 079,19
L57	+57 161,65	+276 308,53	R57	+57 374,42	+275 814,91
L58	+57 177,81	+276 268,34	R58	+57 466,04	+275 660,62
L59	+57 197,10	+276 229,91	R59	+57 489,94	+275 621,38
L60	+57 237,74	+276 161,27	R60	+57 504,41	+275 603,73
L61	+57 255,07	+276 127,63	R61	+57 569,78	+275 530,52
L62	+57 268,62	+276 110,02	R62	+57 632,82	+275 440,50
L63	+57 284,09	+276 076,39	R63	+57 742,04	+275 293,90
L64	+57 432,49	+275 819,25	R64	+57 791,54	+275 306,87
L65	+57 452,20	+275 815,57	R65	+57 905,92	+275 190,79
L66	+57 522,87	+275 691,26	R66	+58 474,08	+274 606,87
L67	+57 583,54	+275 606,21	R67	+58 530,04	+274 549,91
L68	+57 635,00	+275 556,40	R68	+58 590,33	+274 441,29
L69	+57 680,57	+275 512,28	R69	+58 587,40	+274 411,90
L70	+57 755,54	+275 436,58	R70	+58 573,24	+274 372,21
L71	+57 777,06	+275 421,30	R71	+58 559,88	+274 355,68
L72	+57 800,91	+275 411,14	R72	+58 609,25	+274 282,66
L73	+57 887,79	+275 384,39	R73	+58 648,18	+274 271,03
L74	+57 902,46	+275 335,82	R74	+58 758,49	+274 257,45
L75	+57 877,56	+275 323,38	R75	+58 807,47	+274 253,99
L76	+57 983,25	+275 172,98	R76	+58 811,78	+274 265,72
L77	+58 437,29	+274 707,09	R77	+58 889,95	+274 231,43
L78	+58 486,83	+274 654,28	R78	+59 000,26	+274 212,19
L79	+58 590,30	+274 562,00	R79	+59 031,39	+274 208,70
L80	+58 623,13	+274 538,34	R80	+59 075,29	+274 206,11
L81	+58 648,01	+274 526,42	R81	+59 096,27	+274 205,38
L82	+58 681,56	+274 537,91	R82	+59 121,26	+274 207,07
L83	+58 705,04	+274 539,53	R83	+59 634,92	+274 275,39
L84	+58 740,73	+274 524,76	R84	+59 729,62	+274 276,82
L85	+58 754,35	+274 510,79	R85	+59 768,06	+274 270,32
L86	+58 768,06	+274 492,32	R86	+59 807,29	+274 259,04
L87	+58 755,42	+274 472,86	R87	+59 830,58	+274 250,30
L88	+58 798,31	+274 419,41	R88	+59 945,57	+274 207,13
L89	+58 816,13	+274 382,95	R89	+59 982,23	+274 189,60
L90	+58 839,62	+274 359,92	R90	+60 018,90	+274 166,13
L91	+58 861,84	+274 318,76	R91	+60 069,87	+274 140,04
L92	+58 877,08	+274 304,13	R92	+60 088,63	+274 133,16
L93	+58 897,85	+274 291,52	R93	+60 157,65	+274 115,50
L94	+58 952,21	+274 271,81	R94	+60 183,43	+274 126,35
L95	+59 007,85	+274 261,29	R95	+60 324,84	+273 958,14
L96	+59 064,59	+274 256,32	R96	+60 584,85	+273 609,71
L97	+59 165,42	+274 262,36	R97	+60 574,71	+273 568,90
L98	+59 622,00	+274 324,86	R98	+60 589,75	+273 515,21
L99	+59 670,16	+274 331,26	R99	+60 602,44	+273 488,91
L100	+59 733,81	+274 331,77	R100	+60 623,84	+273 460,47
			R94B	+60 273,46	+274 019,58

Vel Sheet 12 van of 15 P 310/79

University of Pretoria
Tomorrow's Men Excellence

PADRESERWE KOÖRDINATE / ROAD RESERVE CO-ORDINATES

LINKERKANT/ LEFT HAND SIDE			REGTERKANT/ RIGHT HAND SIDE		
	Y	X	Lo 31°m	Y	X
Constant	0,00	+3 000 000,00	Konstant	0,00	+3 000 000,00
L101	+59 766,70	+274 327,86	R101	+60 637,39	+273 444,92
L102	+59 826,51	+274 314,19	R102	+60 653,64	+273 431,10
L103	+59 858,99	+274 301,45	R103	+60 689,19	+273 408,50
L104	+59 879,20	+274 295,20	R104	+60 841,26	+273 327,21
L105	+59 953,31	+274 272,26	R105	+60 868,96	+273 310,99
L106	+59 971,27	+274 266,24	R106	+60 937,69	+273 265,94
L107	+59 999,61	+274 262,77	R107	+60 964,50	+273 256,35
L108	+60 073,91	+274 261,45	R108	+61 048,40	+273 214,31
L109	+60 123,81	+274 253,72	R109	+61 144,20	+273 146,24
L110	+60 155,41	+274 205,58	R110	+61 320,75	+273 031,82
L111	+60 205,59	+274 171,14	R111	+61 489,39	+272 925,79
L112	+60 240,03	+274 142,27	R112	+61 622,22	+272 838,09
L113	+60 393,99	+273 945,03	R113	+61 740,65	+272 811,19
L114	+60 588,63	+273 691,95	R114	+61 825,93	+272 813,54
L115	+60 595,48	+273 737,49	R115	+61 851,57	+272 816,92
L116	+60 614,22	+273 801,66	R116	+61 870,38	+272 819,96
L117	+60 632,10	+273 891,13	R117	+61 884,31	+272 823,03
L118	+60 636,06	+273 932,93	R118	+61 906,76	+272 829,33
L119	+60 671,85	+273 944,94	R119	+61 926,83	+272 835,93
L120	+60 659,69	+273 846,17	R120	+61 942,21	+272 842,40
L121	+60 650,73	+273 765,17	R121	+62 000,12	+272 872,25
L122	+60 651,13	+273 729,79	R122	+62 131,00	+272 950,13
L123	+60 653,00	+273 694,27	R123	+62 189,17	+272 981,21
L124	+60 658,23	+273 662,62	R124	+62 219,76	+272 993,98
L125	+60 666,03	+273 631,17	R125	+62 339,30	+273 054,17
L126	+60 675,09	+273 602,90	R126	+62 344,10	+273 062,21
L127	+60 697,22	+273 563,19	R127	+62 420,80	+273 107,98
L128	+60 844,22	+273 415,68	R128	+62 425,64	+273 105,08
L129	+60 881,26	+273 382,75	R129	+62 569,17	+273 176,13
L130	+60 919,48	+273 355,71	R130	+62 691,63	+273 263,03
L131	+61 593,09	+272 927,78	R131	+62 748,42	+273 322,70
L132	+61 618,32	+272 819,78	R132	+62 808,47	+273 420,74
L133	+61 687,20	+272 876,97	R133	+62 812,24	+273 455,14
L134	+61 791,44	+272 859,26	R134	+62 849,42	+273 617,21
L135	+61 820,62	+272 859,75	R135	+62 882,65	+273 779,97
L136	+61 875,21	+272 871,03	R136	+62 923,82	+273 856,02
L137	+61 894,47	+272 87[illegible],64	R137	+63 032,35	+273 939,13
L138	+61 911,65	+262 883,30	R138	+63 135,04	+273 883,17
L139	+61 955,22	+272 905,16	R139	+63 232,80	+273 836,14
L140	+62 104,99	+273 001,07	R140	+63 265,21	+273 904,28
L141	+62 167,01	+273 025,58	R141	+63 403,31	+273 911,26
L142	+62 231,04	+273 068,84	R142	+63 440,10	+273 904,66
L143	+62 236,03	+273 077,20	R143	+63 483,80	+273 880,62
L144	+62 257,40	+273 098,19	R144	+63 508,72	+273 810,80
L145	+62 291,79	+273 122,67	R145	+63 511,33	+273 785,83
L146	+62 346,18	+273 157,57	R146	+63 632,76	+273 773,07
L147	+62 465,88	+273 223,82	R147	+63 635,37	+273 790,94
L148	+62 478,58	+273 225,37	R148	+63 661,18	+273 842,92
L149	+62 603,09	+273 298,65	R149	+63 674,89	+273 882,22
L150	+62 666,93	+273 345,94	R150	+63 681,24	+273 893,37

Vel Sheet 13 van of 15 P 310/79

University of Pretoria
Tuksen in Pretoria

PADRESERWE KOÖRDINATE / ROAD RESERVE CO-ORDINATES

LINKERKANT/ LEFT HAND SIDE			REGTERKANT/ RIGHT HAND SIDE		
	Y	X	Lo 31°m	Y	X
Constant	0,00	+3 000 000,00	Konstant	0,00	+3 000 000,00
L151	+62 713,76	+273 407,08	R151	+63 697,79	+273 878,54
L152	+62 738,66	+273 470,85	R152	+63 715,45	+273 839,76
L153	+62 742,74	+273 496,91	R153	+63 755,98	+273 800,61
L154	+62 765,24	+273 593,29	R154	+63 769,25	+273 789,84
L155	+62 797,88	+273 793,34	R155	+63 856,50	+273 749,78
L156	+62 827,88	+273 882,50	R156	+63 880,08	+273 743,32
L157	+62 868,43	+273 953,11	R157	+63 916,23	+273 668,91
L158	+62 871,10	+273 989,55	R158	+63 991,18	+273 640,71
L159	+62 858,79	+274 039,88	R159	+64 001,90	+273 629,54
L160	+62 800,82	+274 086,26	R160	+64 021,49	+273 603,55
L161	+62 894,63	+274 171,28	R161	+64 024,17	+273 579,03
L162	+62 957,49	+274 139,47	R162	+64 054,28	+273 554,18
L163	+63 096,91	+274 084,11	R163	+64 090,23	+273 500,29
L164	+63 116,89	+274 077,10	R164	+64 119,15	+273 447,66
L165	+63 153,49	+274 064,27	R165	+64 161,72	+273 400,51
L166	+63 229,96	+274 054,64	R166	+64 159,99	+273 370,73
L167	+63 417,31	+274 076,70	R167	+64 218,80	+273 364,61
L168	+63 469,93	+274 074,89	R168	+64 267,31	+273 323,54
L169	+63 525,83	+274 067,26	R169	+64 347,94	+273 242,05
L170	+63 591,27	+274 036,90	R170	+64 400,00	+273 174,62
L171	+63 622,65	+274 027,44	R171	+64 476,99	+273 078,16
L172	+63 684,08	+274 033,36	R172	+64 699,28	+273 054,73
L173	+63 720,39	+274 000,50	R173	+64 553,77	+273 002,12
L174	+63 725,81	+273 943,14	R174	+64 606,76	+272 964,94
L175	+63 825,32	+273 944,63	R175	+64 640,33	+272 947,12
L176	+63 887,49	+273 908,87	R176	+64 712,03	+272 922,53
L177	+63 973,29	+273 804,88	R177	+64 927,27	+272 869,31
L178	+63 955,88	+273 782,13	R178	+65 058,76	+272 834,07
L179	+64 066,87	+273 683,82	R179	+65 092,09	+272 826,60
L180	+64 129,69	+273 566,63	R180	+65 245,28	+272 778,96
L181	+64 152,14	+273 529,98	R181	+65 450,74	+272 711,07
L182	+64 189,64	+273 483,55	R182	+65 545,93	+272 667,76
L183	+64 203,41	+273 470,72	R183	+65 580,29	+272 650,95
L184	+64 235,42	+273 442,69	R184	+65 648,42	+272 610,58
L185	+64 259,01	+273 412,22	R185	+65 681,73	+272 592,09
L186	+64 326,83	+273 356,41	R186	+65 777,91	+272 545,32
L187	+64 374,22	+273 310,81	R187	+65 799,64	+272 529,08
L188	+64 400,42	+273 281,45	R188	+65 834,63	+272 507,74
L189	+64 429,54	+273 254,05	R189	+65 864,86	+272 491,13
L190	+64 455,13	+273 238,22	R190	+65 918,72	+272 455,72
L191	+64 495,71	+273 201,92	R191	+65 941,19	+272 437,79
L192	+64 497,77	+273 159,40	R192	+65 957,23	+272 418,20
L193	+64 530,92	+273 108,93	R193	+65 978,78	+272 386,55
L194	+64 684,22	+272 998,02	R194	+66 015,94	+272 318,47
L195	+64 727,39	+272 985,96	R195	+66 031,14	+272 274,45
L196	+64 836,49	+272 958,61	R196	+66 053,10	+272 192,75
L197	+64 942,20	+272 945,98	R197	+66 073,29	+272 094,92
L198	+65 084,23	+272 908,80	R198	+66 089,17	+272 061,12
L199	+65 287,79	+272 851,30	R199	+66 074,45	+272 023,42
L200	+65 394,98	+272 795,45	R200	-66 087,18	+271 960,11
L193B	+64 548,68	+273 096,04			
L193C	+64 651,82	+273 021,15			

Vel Sheet 14 van of 15 | P 310/79

University of Pretoria
Vir in Deelbare Tuo

PADRESERWE KOÖRDINATE / ROAD RESERVE CO-ORDINATES

LINKERKANT/ LEFT HAND SIDE			REGTERKANT/ RIGHT HAND SIDE		
	Y	X	Lo 31°m	Y	X
Constant	0,00	+3 000 000,00	Konstant	0,00	+3 000 000,00
L201	+65 612,42	+272 741,00	R201	+66 095,84	+271 930,70
L202	+65 716,98	+272 707,70	R202	+66 113,41	+271 884,72
L203	+66 017,39	+272 600,05	R203	+66 138,70	+271 839,13
L204	+66 134,29	+272 520,24	R204	+66 242,24	+271 716,39
L205	+66 236,31	+272 360,69	R205	+66 314,84	+271 610,78
L206	+66 255,11	+272 138,64	R206	+66 337,34	+271 579,64
L207	+66 303,19	+271 989,58	R207	+66 368,21	+271 523,77
L208	+66 325,91	+271 923,05	R208	+66 382,52	+271 502,49
L209	+66 351,38	+271 879,31	R209	+66 422,03	+271 457,32
L210	+66 474,83	+271 761,73	R210	+66 450,37	+271 409,54
L211	+66 499,74	+271 743,65	R211	+66 433,64	+271 406,74
L212	+66 527,93	+271 713,02	R212	+66 443,81	+271 370,16
L213	+66 563,14	+271 669,72	R213	+66 467,46	+271 329,70
L214	+66 639,71	+271 585,55	R214	+66 488,77	+271 335,85
L215	+66 729,99	+271 451,10	R215	+66 498,01	+271 318,03
			R216	+66 494,85	+271 298,97
			R217	+66 496,36	+271 281;85

Vel Sheet 15 van of 15 | P 310/79

University of Fort Hare
Together in Excellence

No. 160, 1980

VERKLARING VAN 'N NASIONALE PAD.—PROVINSIE TRANSVAAL

Kragtens artikel 4 (1) (a) van die Wet op Nasionale Paaie, 1971 (Wet 54 van 1971), soos gewysig, verklaar ek hierby dat die roete wat in die bygaande Bylae beskryf word, 'n nasionale pad is.

Gegee onder my Hand en die Seël van die Republiek van Suid-Afrika te Durban, op hede die Agtste dag van Augustus Eenduisend Negehonderd-en-tagtig.

M. VILJOEN, Staatspresident.

Op las van die Staatspresident-in-rade:

J. C. HEUNIS.

BYLAE

PROVINSIE TRANSVAAL

Beskrywing van roete

'n Roete, soos opgemeet en aangetoon op Plan TPS 4/79, wat in die kantoor van die Direkteur van Nasionale Paaie, Departement van Vervoer, Pretoria, geliasseer is, wat begin op restant van Roodekop 139 IR en daarvandaan loop oor genoemde restant; Gedeeltes 46, 48 en 58, almal van Roodekop 139 IR; restante van Gedeeltes 8, 13, 150 en 64, Gedeeltes 88, 101, 107, 120, 155 (Uniondale), 205, 216, 259, 263, 277, 280, 339, 354, 355, 360 en 381, Elandsfonteinweg, South Randweg en Randlughawepad, almal van Elandsfontein 108 IR; Kritzingerweg van Verwoerdpark-uitbreiding 2; Erf 402 van Albemarle; Hoewes 1/3, 1/5, 1/6, 1/7, 2/20, 1/20, 1/22, 1/30, 2/6, 14, restant van 30 en 46, Corneliusweg, Chrisstraat en Radiostraat, almal van Nortonskleinhoewes; Erwe 729, 730, 731, 732, 714, 715, 716, 717, 718 en 751, almal van Albemarle-uitbreiding 2; Erwe 1/66, 1/67, 1/68 en 65, Jacobaweg en Chrisstraat, almal van Union-uitbreiding 12; Erwe 61, 62, 63 en 64, Jacobaweg en Corneliusweg, almal van Union-uitbreiding 10; Erwe 36, 37, 38 en 39, almal van Union-uitbreiding 5; restant van Elandsfontein, Gedeeltes 34 en 38, almal van Elandsfontein 107 IR; Gedeelte van Joyce 93 IR; Gedeelte 344 van Doornfontein 92 IR; restante van Gedeeltes 1 en 2, Gedeeltes 32, 110, 177, 210, 211, 216, 217, 247, 285, 342, 358, 356, 477, 480, 562, 707, 738, 742, 760, 761, 762, 763, 852, 787, 788, 789, 865, 866, 868, 875, 876 en 881, Nasmithlaan, Hoofrifweg en Stanhopeweg, almal van Elandsfontein 90 IR; Erf 33 van Jupiter-uitbreiding 1; Erwe 474, 293, 294, 295, 1/539, 1/296, 2/296, 1/330, 1/331, 1/332 en 1/544, Valonialaan, Ixiaweg en Deutziaweg, almal van Wychwood; Cydoniaweg van Primrose Hill; Erwe 1/424, 1/426, 1/429, 1/430, 1/431 en 1/432, dienspad en Vandortstraat, almal van Malvern East-uitbreiding 6; restant van 33, Erwe 1/35 en 36, almal van Daniapark; Erwe 358, 359, 360, 361, 362 en 1/365, Hillstraat en Vanbuurenweg, almal van Bedfordview-uitbreiding 81; Hoewes 63, 64, 87, 1/89, 2/89, 1/86, 2/86, 3/86, 4/93, 3/93, 2/94, 3/94, 1/95, 3/96, 4/96, 4/97, 5/97, 1/99, 103, 111, 112, 113, 114, 1/264, 7/264, 8/264, 9/264, 10/264 en 1/331, Nicolweg, Edendaleweg, Kingsweg, Florencelaan en Vanbuurenweg, almal van Geldenhuis Estatelandbouhoewes; Erwe 1/1, 1/2, 1/3, 1/4 en 1/5, Plantationweg en dienspaaie, almal van Oriel; Erwe 215, 216, 217, 218 en 1/214, almal van Bedfordview-uitbreiding 51, waar dit eindig ('n totale afstand van ongeveer 17 km).

(Nasionale Roete: Old Barnwisselaar-Gilloolyswisselaar, distrikte Alberton, Johannesburg en Germiston.)

No. 160, 1980

DECLARATION OF A NATIONAL ROAD. —PROVINCE OF THE TRANSVAAL

In terms of section 4 (1) (a) of the National Roads Act, 1971 (Act 54 of 1971), as amended, I hereby declare that the route described in the Schedule hereto, shall be a national road.

Given under my Hand and the Seal of the Republic of South Africa at Durban this Eighth day of August, One thousand Nine hundered and Eighty.

M. VILJOEN, State President.

By Order of the State President-in-Council:

J. C. HEUNIS.

SCHEDULE

PROVINCE OF THE TRANSVAAL

Description of route

A route, as surveyed and depicted on Plan TPS 4/79, which is tabled in the Office of the Director of National Roads, Department of Transport, Pretoria, commencing on remainder of Roodekop 139 IR and thence proceeding over the said remainder; Portions 46, 48 and 58, all of Roodekop 139 IR; remainders of Portions 8, 13, 150 and 64, Portions 88, 101, 107, 120, 155 (Uniondale), 205, 216, 259, 263, 277, 280, 339, 354, 355, 360 and 381, Elandsfontein Road, South Rand Road and Rand Airport Road, all of Elandsfontein 108 IR; Kirtzinger Road of Verwoerd Park Extension 2; Erf 402 of Albemarle; Smallholdings 1/3, 1/5, 1/6, 1/7, 2/20, 1/20, 1/22, 1/30, 2/6, 14, remainder of 30 and 46, Cornelius Road, Chris Street and Radio Street, all of Nortons Small Farms; Erven 729, 730, 731, 732, 714, 715, 716, 717, 718 and 751, all of Albemarle Extension 2; Erven 1/66, 1/67, 1/68 and 65, Jacoba Road and Chris Street, all of Union Extension 12; Erven 61, 62, 63 and 64, Jacoba Road and Cornelius Road, all of Union Extension 10; Erven 36, 37, 38 and 39, all of Union Extension 5; remainder of Elandsfontein, Portions 34 and 38, all of Elandsfontein 107 IR; portion of Joyce 93 IR; Portion 344 of Doornfontein 92 IR; remainders of Portions 1 and 2, Portions 32, 110, 177, 210, 211, 216, 217, 247, 285, 342, 358, 356, 477, 480, 562, 707, 738, 742, 760, 761, 762, 763, 852, 787, 788, 789, 865, 866, 868, 875, 876 and 881, Nasmith Avenue, Hoofrif Road, Stanhope Road, all of Elandsfontein 90 IR; Erf 33 of Jupiter Extension 1; Erven 474, 293, 294, 295, 1/539, 1/296, 2/296, 1/330, 1/331, 1/332 and 1/544, Valonia Avenue, Ixia Road and Deutzia Road, all of Wychwood; Cydonia Road of Primrose Hill; Erven 1/424, 1/426, 1/429, 1/430, 1/431 and 1/432, service road and Van Dort Street, all of Malvern East Extension 6; remainder of 33, Erven 1/35 and 36, all of Dania Park; Erven 358, 359, 360, 361, 362 and 1/365, Hill Street and Van Buuren Road, all of Bedfordview Extension 81; Small Holdings 63, 64, 87, 1/89, 2/89, 1/86, 2/86, 3/86, 4/93, 3/93, 2/94, 3/94, 1/95, 3/96, 4/96, 4/97, 5/97, 1/99, 103, 111, 112, 113, 114, 1/264, 7/264, 8/264, 9/264, 10/264 and 1/331, Nicol Road, Edendale Road, Kings Road, Florence Avenue and Van Buuren Road, all of Geldenhuis Estate Small Holdings; Erven 1/1, 1/2, 1/3, 1/4 and 1/5, Plantation Road and service roads, all of Oriel; Erven 215, 216, 217, 218 and 1/214, all of Bedfordview Extension 51, where it terminates (a total distance of about 17 km).

(National Route: Old Barn Interchange-Gillooly's Interchange, Districts of Alberton, Johannesburg and Germiston.)

No. 164, 1980

VERKLARING VAN 'N GROEPSGEBIED INGEVOLGE DIE WET OP GROEPSGEBIEDE, 1966, TE KEMPTON PARK, DISTRIK KEMPTON PARK, PROVINSIE TRANSVAAL

Kragtens artikel 23 van die Wet op Groepsgebiede, 1966 (Wet 36 van 1966), verklaar ek hierby dat die gebied omskryf in die Bylae hiervan, vanaf die datum van publikasie hiervan, 'n gebied is vir okkupasie en grondbesit deur lede van die Blanke groep.

Gegee onder my Hand en die Seël van die Republiek van Suid-Afrika te Pretoria, op hede die Negentiende dag van Augustus Eenduisend Negehonderd-en-tagtig.

M. VILJOEN, Staatspresident.

Op las van die Staatspresident-in-rade:

S. J. M. STEYN.

BYLAE

BLANKE GROEP

Vanaf die noorwestelike baken van Gedeelte 48 (Kaart LG A1365/37) van die plaas Klipfontein 12 IR, algemeen oos met die noordelike grense van die plase Klipfontein 12 IR en Mooifontein 14 IR langs, sodat hulle in hierdie gebied ingesluit word, tot by die noordwestelike hoek van Gedeelte 9 (Kaart LG A1107/08) van die plaas Mooifontein 14 IR; dan suidoos en noordoos met die grense van die volgende eiendomme langs sodat hulle in hierdie gebied ingesluit word: Genoemde Gedeelte 9, Gedeelte 73 (Kaart LG A4921/72) en Gedeelte 87 (Kaart LG A9559/73) almal van die plaas Mooifontein 14 IR en die dorp Birchleigh-Noord-uitbreiding 3 (Algemene Plan LG A1931/72) tot by die noordoostelike baken van genoemde dorp; dan suidoos met die grense van die volgende dorpe langs sodat hulle in hierdie gebied ingesluit word: Genoemde dorp Birchleigh-Noord-uitbreiding 3 en die dorp Birchleigh-Noord (Algemene Plan LG A8590/73) tot by die oostelikste baken van laasgenoemde dorp; dan algemeen suidwes en noord met die grense van die volgende dorpe langs sodat hulle in hierdie gebied ingesluit word: Genoemde dorp Birchleigh-Noord, die dorpe Birchleigh-Noord-uitbreiding 2 (Algemene Plan LG A7791/72), Norkem Park (Algemene Plan LG A6315/71) en Norkem Park-uitbreiding 1 (Algemene Plan LG A6316/71), tot by die noordoostelike baken van Gedeelte 22 (Kaart LG A614/24) van die plaas Mooifontein 14 IR; dan wes met die noordelike grens van genoemde Gedeelte 22 van die plaas Mooifontein 14 IR langs, tot by die noordwestelike baken daarvan; dan suidwes reguit tot by die suidoostelike baken van die dorp Birch Acres-uitbreiding 4 (Algemene Plan LG A4439/73); dan suidwes en algemeen noordwes met die grense van die volgende dorpe langs sodat hulle in hierdie gebied ingesluit word: Birch Acres (Algemene Plan LG A8278/69), Birch Acres-uitbreiding 5 (Algemene Plan LG A2972/74) en Birch Acres-uitbreiding 7 (Algemene Plan LG A4297/76) tot by die noordwestelike baken van laasgenoemde dorp; dan algemeen noordwes en suidwes met die noordoostelike en noordwestelike grense van Gedeelte 79 (Kaart LG A4972/73) van die plaas Mooifontein 14 IR langs, tot by baken L op genoemde kaart; dan suid reguit tot by Baken H op genoemde Kaart LG A4972/73; dan suidwes met die noordwestelike grens van Gedeelte 57 (Kaart LG A6827/52) van die plaas Mooifontein 14 IR langs,

No. 164, 1980

DECLARATION OF A GROUP AREA IN TERMS OF THE GROUP AREAS ACT, 1966, AT KEMPTON PARK, DISTRICT OF KEMPTON PARK, PROVINCE OF THE TRANSVAAL

Under section 23 of the Group Areas Act, 1966 (Act 36 of 1966), I hereby declare that the area defined in the Schedule hereto shall, as from the date of publication hereof, be an area for occupation and ownership by members of the White group.

Given under my Hand and the Seal of the Republic of South Africa at Pretoria on this Nineteenth day of August, One thousand Nine hundred and Eighty.

M. VILJOEN, State President.

By Order of the State President-in-Council:

S. J. M. STEYN.

SCHEDULE

WHITE GROUP

From the north-western beacon of Portion 48 (Diagram SG A1365/37) of the farm Klipfontein 12 IR, generally eastwards along the northern boundaries of the farms Klipfontein 12 IR and Mooifontein 14 IR, so as to include them in this area, to the north-western corner of Portion 9 (Diagram SG A1107/08) of the farm Mooifontein 14 IR; thence south-eastwards and north-eastwards along the boundaries of the following properties so as to include them in this area: The said Portion 9, Portion 73 (Diagram SG A4921/72) and Portion 87 (Diagram SG A9559/73) all of the farm Mooifontein 14 IR and Birchleigh North Township Extension 3 (General Plan SG A1931/72), to the north-eastern beacon of the said township; thence south-eastwards along the boundaries of the following townships so as to include them in this area: The said Birchleigh North Township Extension 3 and Birchleigh North Township (General Plan SG A8590/73), to the easternmost beacon of the latter township; thence generally south-westwards and northwards along the boundaries of the following townships so as to include them in this area: The said Birchleigh North Township, Birchleigh North Township Extension 2 (General Plan SG A7791/72), Norkem Park Township (General Plan SG A6315/71) and Norkem Park Township Extension 1 (General Plan SG A6316/71), to the north-eastern beacon of Portion 22 (Diagram SG A614/24) of the farm Mooifontein 14 IR; thence westwards along the northern boundary of the said Portion 22 of the farm Mooifontein 14 IR, to the north-western beacon thereof; thence south-westwards in a straight line to the south-eastern beacon of Birch Acres Township Extension 4 (General Plan SG A4439/73); thence south-westwards and generally north-westwards along the boundaries of the following townships so as to include them in this area: Birch Acres Township (General Plan SG A8278/69), Birch Acres Township Extension 5 (General Plan SG A2972/74) and Birch Acres Township Extension 7 (General Plan SG A4297/76), to the north-western beacon of the last-named township; thence generally north-westwards and south-westwards along the north-eastern and north-western boundaries of Portion 79 (Diagram SG A4972/73) of the farm Mooifontein 14 IR, to Beacon L on the said diagram; thence southwards in a straight line to Beacon H on the said Diagram SG A4972/73; thence south-westwards along the north-western boundary of Portion 57 (Diagram SG A6827/52) of the farm Mooifontein 14 IR, to the

tot by die westelikste baken daarvan; dan suid met die westelike grens van die plaas Mooifontein 14 IR langs, tot by die suidwestelike baken daarvan; dan suidwes met die suidoostelike grens van die plaas Klipfontein 12 IR langs, tot by die suidelikste baken van Intokozo Landbouhoewes (Algemene Plan LG A3876/39); dan algemeen noord met die grense van die volgende langs sodat hulle in hierdie gebied ingesluit word: Genoemde Intokozo Landbouhoewes, Gedeelte 71 (Kaart LG A3393/53) van die plaas Klipfontein 12 IR, die dorp Chloorkop-uitbreiding 7 (Algemene Plan LG A5339/77), die dorp Chloorkop (Algemene Plan LG A3395/53), Gedeelte 21 (Kaart LG A1738/31) en Gedeelte 3 (Kaartboek 127, folio 12) albei van die plaas Klipfontein 12 IR, genoemde dorp Chloorkop en die volgende gedeeltes van die plaas Klipfontein 12 IR: Gedeelte 83 (Kaart LG A4646/68), Gedeelte 73 (Kaart LG A4068/54), Gedeelte 36 (Kaart LG A735/34), Gedeelte 39 (Kaart LG A738/34), Gedeelte 59 (Kaart LG A4080/41), Gedeelte 57 (Kaart LG A3138/41), Gedeelte 49 (Kaart LG A2886/37) en Gedeelte 48 (Kaart LG A1365/37) tot by eersgenoemde baken.

No. 165, 1980

VERKLARING VAN GROEPSGEBIEDE INGEVOLGE DIE WET OP GROEPSGEBIEDE, 1966, TE DE AAR, DISTRIK DE AAR, PROVINSIE DIE KAAP DIE GOEIE HOOP

Kragtens artikel 23 van die Wet op Groepsgebiede, 1966 (Wet 36 van 1966), verklaar ek hierby dat die gebied omskryf in die Bylae hiervan, vanaf die datum van publikasie hiervan, 'n gebied is vir okkupasie en grondbesit deur lede van die Gekleurde groep.

Gegee onder my Hand en die Seël van die Republiek van Suid-Afrika te Pretoria, op hede die Negentiende dag van Augustus Eenduisend Negehonderd-en-tagtig.

M. VILJOEN, Staatspresident.

Op las van die Staatspresident-in-rade:

S. J. M. STEYN.

BYLAE

GEKLEURDE GROEP

Vanaf die noordelikste baken van Gedeelte 20 (Annex Bellary) van die plaas De Aar 180, administratiewe distrik Philipstown, suid met die grense van die volgende eiendomme langs sodat hulle uit hierdie gebied uitgesluit word: Gedeelte 3 van genoemde plaas De Aar 180, Erf 1635, De Aar, Gedeeltes 21 en 22 van genoemde plaas De Aar 180, tot by die noordelikste baken van laasgenoemde gedeelte; dan noordwes met die grens van genoemde Gedeelte 20 langs tot by die oostelikste baken van Erf 2478, De Aar; dan noordwes met die grense van die volgende eiendomme langs sodat hulle uit hierdie gebied uitgesluit word: Genoemde Erf 2478 en Erf 2481, De Aar, tot by eersgenoemde baken.

No. 170, 1980

DATUMS WAAROP SEKERE BEPALINGS VAN DIE VYFDE WYSIGINGSWET OP DIE GRONDWET VAN DIE REPUBLIEK VAN SUID-AFRIKA, 1980 (WET 101 VAN 1980) IN WERKING TREE

Kragtens die bevoegdheid my verleen by artikel 37 van die Vyfde Wysigingswet op die Grondwet van die Republiek van Suid-Afrika, 1980 (Wet 101 van 1980), bepaal ek hierby dat die bepalings van artikels

westernmost beacon thereof; thence southwards along the western boundary of the farm Mooifontein 14 IR, to the south-western beacon thereof; thence southwestwards along the south-eastern boundary of the farm Klipfontein 12 IR, to the southernmost beacon of Intokozo Agricultural Holdings (General Plan SG A3876/39); thence generally northwards along the boundaries of the following so as to include them in this area: The said Intokozo Agricultural Holdings, Portion 71 (Diagram SG A3393/53) of the farm Klipfontein 12 IR, Chloorkop Township Extension 7 (General Plan SG A5339/77), Chloorkop Township (General Plan SG A3395/53), Portion 21 (Diagram SG A1738/31) and Portion 3 (Diagram Book 127, Folio 12) both of the farm Klipfontein 12 IR, the said Chloorkop Township and the following portions of the farm Klipfontein 12 IR: Portion 83 (Diagram SG A4646/68), Portion 73 (Diagram SG A4068/54), Portion 36 (Diagram SG A735/34), Portion 39 (Diagram SG A738/34), Portion 59 (Diagram SG A4080/41), Portion 57 (Diagram SG A3138/41), Portion 49 (Diagram SG A2886/37) and Portion 48 (Diagram SG A1365/37), to the beacon first mentioned

No. 165, 1980

DECLARATION OF GROUP AREAS IN TERMS OF THE GROUP AREAS ACT, 1966, AT DE AAR, DISTRICT OF DE AAR, PROVINCE OF THE CAPE OF GOOD HOPE

Under section 23 of the Group Areas Act, 1966 (Act 36 of 1966), I hereby declare that the area defined in the Schedule hereto shall, as from the date of publication hereof, be an area for occupation and ownership by members of the Coloured group.

Given under my Hand and the Seal of the Republic of South Africa at Pretoria on this Nineteenth day of August, One thousand Nine hundred and Eighty.

M. VILJOEN, State President.

By Order of the State President-in-Council:

S. J. M. STEYN.

SCHEDULE

COLOURED GROUP

From the northernmost beacon of Portion 20 (Annex Bellary) of the farm De Aar 180, Administrative District of Philipstown, southwards along the boundaries of the following properties so as to exclude them from this area: Portion 3 of the said farm De Aar 180, Erf 1635, De Aar, Portions 21 and 22 of the [illegible]rm De Aar 180, to the northernmost beacon of [illegible]mentioned portion; thence north-westwards along the boundary of the said Portion 20 to the easternmost beacon of Erf 2478, De Aar; thence north-westwards along the boundaries of the following properties so as to exclude them from this area: The said Erf 2478 and Erf 2481, De Aar, to the beacon first named.

No. 170, 1980

DATES ON WHICH THE PROVISIONS OF THE REPUBLIC OF SOUTH AFRICA CONSTITUTION FIFTH AMENDMENT ACT, 1980 (ACT 101 OF 1980) SHALL COME INTO OPERATION

In terms of the provisions of section 37 of the Republic of South Africa Constitution Fifth Amendment Act, 1980 (Act 101 of 1980), I hereby determine that the provisions of sections 1, 5, 7, 8, 9, 11 (a)

1, 5, 7, 8, 9, 11 (a) en 34 op 5 September 1980 en die bepalings van artikel 6 op 6 Oktober 1980 in werking tree.

Gegee onder my Hand en die Seël van die Republiek van Suid-Afrika te Pretoria, op hede die Agt-en-twintigste dag van Augustus Eenduisend Negehonderd-en-tagtig.

M. VILJOEN, Staatspresident.

Op las van die Staatspresident-in-rade:

P. W. BOTHA.

and 34 shall come into operation on 5 September 1980 and the provisions of section 6 on 6 October 1980.

Given under my Hand and the Seal of the Republic of South Africa at Pretoria this Twenty-eighth day of August, One thousand Nine hundred and Eighty.

M. VILJOEN, State President.

By Order of the State President-in-Council:

P. W. BOTHA.

No. 166, 1980

WYSIGING VAN DIE BYLAE VAN PROKLAMASIE 295 VAN 1979 INSAKE DIE VERKLARING VAN 'N GROEPSGEBIED TE COLENSO, DISTRIK ESTCOURT, PROVINSIE NATAL

Kragtens die bevoegdheid my verleen by artikel 33 van die Wet op Groepsgebiede, 1966 (Wet 36 van 1966), wysig ek hierby Proklamasie 295 van 1979 deur die Bylae daarvan deur die Bylae hiervan te vervang.

Gegee onder my Hand en die Seël van die Republiek van Suid-Afrika te Kaapstad, op hede die Vyfde dag van Maart Eenduisend Negehonderd-en-tagtig.

M. VILJOEN, Staatspresident.

Op las van die Staatspresident-in-rade:

F. W. DE KLERK.

BYLAE

(a) Vanaf die noordwestelike baken van Onderverdeling 2 van Perseel 8, die dorp Colenso, noordoos met die noordwestelike grens van genoemde Onderverdeling 2 en Perseel 8 langs tot by die noordelikste baken van laasgenoemde perseel; dan suidoos met die grense van die volgende persele in die dorp Colenso langs sodat dit by hierdie gebied ingesluit word: Genoemde Perseel 8, Onderverdeling 1 van Perseel 8, Onderverdeling 1 van Perseel 7, Perseel 7, Perseel 6, Onderverdeling 1 van Perseel 6, Perseel 5, Perseel 4, Onderverdeling 1 van Perseel 3 en Perseel 3, tot by die noordoostelike baken van Onderverdeling 1 van Perseel 2; dan noordoos reguit tot by die noordwestelike baken van Perseel 76, die dorp Colenso; dan met die grense van genoemde Perseel 76 langs, sodat dit by hierdie gebied ingesluit word, tot by die suidwestelike baken daarvan; dan suidwes reguit tot by die suidoostelike baken van Perseel 2, die dorp Colenso; dan met die grens van Perseel 2 langs tot by die suidwestelike baken daarvan; dan noordwes met die grense van die volgende persele langs sodat dit by hierdie gebied ingesluit word: Genoemde Perseel 2, Perseel 3, Onderverdeling 1 van Perseel 3, Perseel 4, Perseel 5, Onderverdeling 1 van Perseel 6, Perseel 6, Perseel 7, Onderverdeling 1 van Perseel 7, Onderverdeling 3 van Perseel 8 en Onderverdeling 2 van Perseel 8, almal van die dorp Colenso, tot by eersgenoemde baken.

(b) Perseel 8 en Onderverdeling 1 van Perseel 8, die dorp Colenso.

(c) Vanaf die suidwestelike baken van Onderverdeling 1 van Perseel 7, die dorp Colenso, noordoos met die suidoostelike grens van genoemde Onderverdeling 1 langs tot by die suidoostelike baken daarvan; dan suidoos met die grense van die volgende persele in die dorp Colenso langs, sodat dit by hierdie gebied ingesluit word: Perseel 7, Perseel 6, Onderverdeling 1 van Perseel 6, Perseel 5, Perseel 4, Onderverdeling 1 van

---

No. 166, 1980

AMENDMENT OF THE SCHEDULE TO PROCLAMATION 295 OF 1979 IN REGARD TO THE DECLARATION OF A GROUP AREA AT COLENSO, DISTRICT OF ESTCOURT, PROVINCE OF NATAL

Under the powers vested in me by section 33 of the Group Areas Act, 1966 (Act 36 of 1966), I hereby amend Proclamation 295 of 1979 by the substitution of the Schedule hereto for the Schedule thereto.

Given under my Hand and the Seal of the Republic of South Africa at Cape Town on this Fifth day of March, One thousand Nine hundred and Eighty.

M. VILJOEN, State President.

By Order of the State President-in-Council:

F. W. DE KLERK.

SCHEDULE

(a) From the north-western beacon of Subdivision 2 of Lot 8, Colenso Township, north-eastwards along the north-western boundary of the said Subdivision 2 and Lot 8, to the northernmost beacon of the last-mentioned lot; thence south-eastwards along the boundaries of the following lots in Colenso Township, so as to include them in this area: The said Lot 8, Subdivision 1 of Lot 8, Subdivision 1 of Lot 7, Lot 7, Lot 6, Subdivision 1 of Lot 6, Lot 5, Lot 4, Subdivision 1 of Lot 3 and Lot 3, to the north-eastern beacon of Subdivision 1 of Lot 2; thence north-eastwards in a straight line to the north-western beacon of Lot 76, Colenso Township; thence along the boundaries of the said Lot 76, so as to include it in this area, to the south-western beacon thereof; thence south-westwards in a straight line to the south-eastern beacon of Lot 2, Colenso Township; thence along the boundary of Lot 2 to the south-western beacon thereof; thence north-westwards along the boundaries of the following lots, so as to include them in this area: The said Lot 2, Lot 3, Subdivision 1 of Lot 3, Lot 4, Lot 5, Subdivision 1 of Lot 6, Lot 6, Lot 7, Subdivision 1 of Lot 7, Subdivision 3 of Lot 8 and Subdivision 2 of Lot 8, all of Colenso Township, to the beacon first mentioned.

(b) Lot 8 and Subdivision 1 of Lot 8, Colenso Township.

(c) From the south-western beacon of Subdivision 1 of Lot 7, Colenso Township, north-eastwards along the south-eastern boundary of the said Subdivision 1, to the south-eastern beacon thereof; thence south-eastwards along the boundaries of the following lots in Colenso Township, so as to include them in this area: Lot 7, Lot 6, Subdivision 1 of Lot 6, Lot 5, Lot 4, Sub-

Perseel 3 en Perseel 3, tot by die noordoostelike baken van Onderverdeling 1 van Perseel 2; dan noordoos reguit tot by die noordwestelike baken van Perseel 76, die dorp Colenso; dan met die grense van genoemde Perseel 76 langs, sodat dit by hierdie gebied ingesluit word, tot by die suidwestelike baken daarvan: dan suidwes reguit tot by die suidoostelike baken van Perseel 2, die dorp Colenso: dan met die grens van Perseel 2 langs tot by die suidwestelike baken daarvan; dan noordwes met die grense van die volgende persele langs, sodat dit by hierdie gebied ingesluit word: Genoemde Perseel 2, Perseel 3, Onderverdeling 1 van Perseel 3, Perseel 4, Perseel 5, Onderverdeling 1 van Perseel 6, Perseel 6 en Perseel 7, almal van die dorp Colenso, tot by eersgenoemde baken.

(d) Onderverdeling 1 van Perseel 7, die dorp Colenso.

GOEWERMENTSKENNISGEWINGS

DEPARTEMENT VAN BINNELANDSE SAKE

No. 1842 5 September 1980

WET OP VREEMDELINGE, 1937

VANSVERANDERING.—MARAIS IN KIESER

Dit het die Staatspresident behaag om, kragtens die bepalings van artikel 9 van die Wet op Vreemdelinge, 1937 (Wet 1 van 1937), Charles Martin Marais, sy vrou Janine Colette, gebore Coetzer, en sy kind Jean Martin Coetzer, woonagtig te Ritor 405, Cilliersstraat 52, Sunnyside, te magtig om die van Kieser aan te neem.

DEPARTEMENT VAN BUITELANDSE SAKE EN INLIGTING

No. 1843 5 September 1980

GELOOFSBRIEFOORHANDIGING

Hierby word bekendgemaak dat Sy Eksellensie mnr. Oswald Gustav Albers op 25 Junie 1980 deur die President van Bolivia ontvang is en dat hy by daardie geleentheid sy Geloofsbrief as Buitengewone en Gevolmagtigde Ambassadeur van die Republiek van Suid-Afrika in die Republiek Bolivia oorhandig het.

[4/2/148 (32)]

KANTOOR VAN DIE EERSTE MINISTER

No. 1830 5 September 1980

VREEMDE EERBEWYS

Hierby word bekendgemaak dat die Staatspresident ingevolge die reëls afgekondig by Goewermentskennisgewing 2004 van 27 Desember 1963, goedgekeur het dat ondergenoemde Suid-Afrikaanse burger die vreemde eerbewys teenoor sy naam aangedui, aanvaar en die onderskeidingstekens daarvan by gepaste geleenthede dra:

Luitenant-generaal Nicolaas Johan Nieuwoudt, SM "The Grand Cordon of the Order of Resplendent Banner" (Regering van die Republiek China).

No. 1844 5 September 1980

VREEMDE EERBEWYS

Hierby word bekendgemaak dat die Staatspresident, ingevolge die reëls afgekondig by Goewermentskennisgewing 2004 van 27 Desember 1963 goedgekeur het dat ondergenoemde Suid-Afrikaanse burger die vreemde

division 1 of Lot 3 and Lot 3, to the north-eastern beacon of Subdivision 1 of Lot 2; thence north-eastwards in a straight line to the north-western beacon of Lot 76, Colenso Township; thence along the boundaries of the said Lot 76, so as to include it in this area, to the south-western beacon thereof; thence south-westwards in a straight line to the south-eastern beacon of Lot 2, Colenso Township; thence along the boundary of Lot 2 to the south-western beacon thereof; thence north-westwards along the boundaries of the following lots, so as to include them in this area: The said Lot 2, Lot 3, Subdivision 1 of Lot 3, Lot 4, Lot 5, Subdivision 1 of Lot 6, Lot 6 and Lot 7, all of Colenso Township, to the beacon first mentioned.

(d) Subdivision 1 of Lot 7, Colenso Township.

GOVERNMENT NOTICES

DEPARTMENT OF THE INTERIOR

No. 1842 5 September 1980

ALIENS ACT, 1937

CHANGE OF SURNAME.—MARAIS TO KIESER

The State President has been pleased, under the provisions of section 9 of the Aliens Act, 1937 (Act 1 of 1937), to authorise Charles Martin Marais, his wife Janine Colette, born Coetzer and his child Jean Martin Coetzer, residing at 405 Ritor, 52 Cilliers Street, Sunnyside, to assume the surname of Kieser.

DEPARTMENT OF FOREIGN AFFAIRS AND INFORMATION

No. 1843 5 September 1980

PRESENTATION OF CREDENTIALS

It is hereby notified that on 25 June 1980 His Excellency Mr Oswald Gustav Albers was received by the President of Bolivia, on which occasion he presented his Letter of Credence as Ambassador Extraordinary and Plenipotentiary of the Republic of South Africa to the Republic of Bolivia.

[4/2/148 (32)]

OFFICE OF THE PRIME MINISTER

No. 1830 5 September 1980

FOREIGN AWARD OF HONOUR

It is hereby notified that the State President has, in terms of the rules published under Government Notice 2004 of 27 December 1963, approved of the undermentioned South African citizen accepting the foreign award of honour indicated opposite his name and of his wearing the insignia thereof on suitable occasions:

Lieutenant-General Nicolaas Johan Nieuwoudt, SM "The Grand Cordon of the Order of Resplendent Banner" (Government of the Republic of China.).

No. 1844 5 September 1980

FOREIGN AWARD OF HONOUR

It is hereby notified that the State President has, in terms of the rules published under Government Notice 2004 of 27 December 1963, approved of the undermentioned South African citizen accepting the foreign

eerbewys teenoor sy naam aangedui, aanvaar en die onderskeidingstekens daarvan by gepaste geleenthede dra:

Kommodoor Johan Andries de Kock: "Commandeur D'L Order National du Merite" (Regering van Frankryk).

award of honour indicated opposite his name and of his wearing the insignia thereof on suitable occasions:

Commodore Johan Andries de Kock: "Commandeur D'L Order National du Merite" (Government of France).

DEPARTEMENT VAN FINANSIES

No. 1845 5 September 1980

Staat van Inkomste ingevorder gedurende die tydperk 1 April 1980 tot 31 Julie 1980.

Tesourie, Pretoria.

DEPARTMENT OF FINANCE

No. 1845 5 September 1980

Statement of Revenue collected during the period 1 April 1980 to 31 July 1980.

Treasury, Pretoria.

Inkomstehoofd	Head of Revenue	Begroting Estimates 1980/81	Ingevorder vir die jaar geëindig 31 Maart 1980 Collections for year ended 31 March 1980	Maand Julie Month of July 1980	Maand Julie Month of July 1979	Totaal 1 April tot 31 Julie Total 1 April to 31 July 1980	Totaal 1 April tot 31 Julie Total 1 April to 31 July 1979
		R	R	R	R	R	R
Staatsinkomsterekening	*State Revenue Account*						
Douane en Aksyns—	Customs and Excise—						
Invoerreg	Customs Duty	480 000 000	453 033 408	57 931 496	41 275 720	201 603 814	144 500 050
Aksynsreg	Excise Duty	1 111 026 000	1 013 806 760	101 724 886	80 422 786	365 498 420	312 978 732
Verkoopreg	Sales Duty	500 000	1 170 527	21 823	90 942	146 854	338 494
Bobelasting	Surcharge	1 000 000	250 577 340	*Dr* 486 707	20 789 391	*Dr* 1 253 085	80 753 728
Diverse	Miscellaneous	19 000 000	21 837 962	*Dr* 995 417	3 930 751	13 568 110	10 184 096
	R	1 611 526 000	1 740 425 977	158 196 081	146 509 590	579 564 109	548 755 100
Oordrag na Sentrale Inkomste Fonds	Transfer to Central Revenue Fund (a)	*Dr* 41 100 000	*Dr* 44 495 546	*Dr* 3 000 000	*Dr* 3 500 000	*Dr* 12 500 000	*Dr* 14 000 000
Betalings ingevolge Douane-Unie Ooreenkomste	Payments in terms of Customs Union Agreements (b)	*Dr* 500 200 000	*Dr* 402 465 893	*Dr* 118 426 750	*Dr* 107 739 000	*Dr* 236 853 500	*Dr* 201 229 500
	R	*Dr* 541 300 000	*Dr* 446 961 439	*Dr* 121 426 750	*Dr* 111 239 000	*Dr* 249 353 500	*Dr* 215 229 500
	R	1 070 226 000	1 293 464 538	36 769 331	35 270 590	330 210 609	333 525 600
Binnelandse Inkomste—	Inland Revenue—						
Belasting op Inkomste	Tax on Income	5 990 800 000	5 234 057 755	514 904 242	403 003 020	1 847 979 962	1 445 235 405
Ander Belastings en Ontvangste—	Other Taxes and Receipts—						
Goudmynhuurkontrakte	Gold mining leases	635 000 000	334 270 081	832	250 359	*Dr* 368	242 429
Ander mynhuurkontrakte	Other mining leases	16 000 000	15 434 763	11 046	13 008	127 479	49 374
Staatseiendomsreginkomste op diamantmyne	State Ownership Revenue on diamond mines	44 000 000	40 476 448	676	853	30 566	16 926
Uitvoerregte op diamante	Export duty on diamonds	31 000 000	31 365 265	2 801 190	4 420 607	7 639 724	11 703 398
Belasting op buitelandse aandeelhouers	Non-Resident shareholders tax	280 000 000	161 508 119	18 689 760	7 566 138	78 671 417	48 409 767
Rentebelasting op buitelanders	Non-Resident's tax on interest	16 080 000	15 540 840	1 217 045	1 423 793	4 586 288	5 233 140
Belasting op onuitgekeerde winste	Undistributed profits tax	5 000 000	4 207 096	235 338	420 004	745 834	1 777 734
Belasting op geskenke	Donations tax	1 500 000	1 476 340	342 702	112 863	623 170	336 431
Sedregte en gelde	Stamp duties and fees	150 000 000	125 571 930	12 095 859	9 277 929	43 170 209	35 262 883
Heregte	Transfer duties	95 400 000	89 430 559	11 280 856	6 472 484	45 042 305	22 233 443
Boedelbelasting	Estate duties	48 800 000	57 871 049	4 274 883	4 723 441	20 364 023	15 077 458
Belasting op bemarkbare sekuriteite	Tax on marketable securities	20 000 000	23 667 167	2 790 274	1 454 874	9 726 265	5 463 776
Lisensies	Licences	3 000 000	2 478 509	85 791	72 985	257 180	242 858
Kinematograaffilmsbelasting	Cinematograph films tax	1 000 000	896 263	78 380	88 285	284 016	304 493
Ander	Other	1 400 500	2 082 588	*Dr* 718 783	*Dr* 150 629	*Dr* 96 838	*Dr* 478 207
Departementele en Diverse Ontvangste—	Departmental and Miscellaneous Receipts—						
Staatsdiamantdelwerye	State Diamond Diggings	13 585 000	28 313 100	—	4 379 740	2 367	7 184 693
Boskinkomste	Forest revenue	28 000 000	33 971 807	3 516 410	2 436 636	11 516 871	8 191 956
Waterinkomste	Water revenue (c)	44 000 000	46 937 753	3 210 230	4 667 862	11 955 135	10 549 183
Boetes en verbeurdverklarings	Fines and forfeitures	12 000 000	11 689 757	996 560	1 449 407	4 073 350	3 930 803
Verhalings van voorskotte	Recoveries of advances	2 787 000	4 204 125	1 438 578	237 593	4 168 241	1 119 665
Verkoop van staatsgrond	Sale of state land	2 500 000	487 824	193 452	49 263	313 452	176 986
Verhuring van staatseiendom	Rental from state property	13 469 000	14 417 236	1 151 774	1 081 128	3 130 054	2 705 336
Algemeen	General	191 022 800	183 874 829	11 016 519	27 435 896	50 134 066	42 780 441
Rente en Dividende	Interest and Dividends	670 595 700	662 337 441	73 347 693	76 345 816	210 122 043	233 372 377
Terugbetaling van Lenings	Repayment of Loans	54 357 500	120 778 281	3 520 191	27 631 275	28 323 361	30 817 837
Algemene Verkoopbelasting	General Sales Tax	1 550 000 000	1 248 735 251	140 760 706	101 806 917	508 494 846	375 352 726
	R	9 841 217 500	8 494 082 166	807 201 804	686 057 547	2 891 385 018	2 307 323 315
	R	10 911 443 500	9 787 546 704	843 971 135	721 328 137	3 221 595 627	2 640 848 915
Staatsoliefonds	State Oil Fund (d)	270 000 000	299 158 006	20 575 386	20 684 158	85 500 718	85 603 613
Nasionale Padfonds	National Road Fund (e)	133 000 000	129 854 005	10 000 000	10 379 469	42 790 477	42 897 945
Suid-Afrikaanse Ontwikkelingstrustfonds	South African Development Trust Fund (f)	6 454 000	14 501 552	572 877	512 001	1 969 489	1 672 620
Rekening vir Swart Vervoerdienste	Account for Black Transport Services (g)	12 500 000	11 448 948	888 713	1 037 823	4 329 693	3 142 702
Fonds vir Sorghumbiernavorsing	Sorghum Beer Research Fund (h)	850 000	1 118 520	790 000	587 645	950 000	587 646
Suidwes-Afrika Gebiedsinkomste	South-West Africa Territorial Revenue Fund (i)	13 000	41 462	2 354	3 550	4 237	22 947
	R	422 817 000	416 122 493	32 789 330	33 204 646	135 540 615	133 727 475
Totaal	Total R	11 334 260 500	10 203 669 197	876 760 465	754 532 783	3 357 136 242	2 774 576 390

Inkomstehoof	Head of Revenue	Begroting Estimates 1980/81	Ingevorder vir die jaar geëindig 31 Maart 1980 Collections for year ended 31 March 1980	Maand Julie Month of July		Totaal 1 April tot 31 Julie Total 1 April to 31 July	
				1980	1979	1980	1979
		R	R	R	R	R	R
Rekonsiliasie met opgaaf gepubliseer by Goewermentskennisgewing 1683 in *Staatskoerant* van 15 Augustus 1980.	Reconciliation with statement published by Government Notice 1683 in *Government Gazette* of 15 August 1980:						
In Transito, 31 Maart 1980....	In Transit, 31 March 1980	—	—	—	—	51 088 619	—
Te veel oorgedra 30 Junie 1980	Overremitted 30 June 1980	—	—	8 779 342	—	—	—
Invorderings soos hierbo.....	Collections, as above.....	—	—	876 760 465	—	3 357 136 242	—
	R	—	—	867 980 923	—	3 408 224 861	—
Te veel oorgedra 31 Julie 1980	Overremitted 31 July 1980	—	—	1 690 580	—	1 690 580	—
In Skatkisrekening ontvang.....	Received into Exchequer Account.....R	—	—	869 671 503	—	3 409 915 441	—

(a) Artikel 22 (1) (d) van Wet 25 van 1969.
(b) Artikel 51 (2) van Wet 91 van 1964.
(c) Voorheen ingedeel onder "Algemeen".
(d) Artikel 1 van Wet 38 van 1977.
(e) Artikel 2 (1) (a) van Wet 54 van 1971.
(f) Artikel 8 van Wet 18 van 1936.
(g) Artikel 7 van Wet 53 van 1957.
(h) Artikel 19*bis* (1) (a) van Wet 63 van 1962.
(i) Artikel 22 (4) (a) van Wet 25 van 1969.

(a) Section 22 (1) (d) of Act 25 of 1969.
(b) Section 51 (2) of Act 91 of 1964.
(c) Previously included under "General".
(d) Section 1 of Act 38 of 1977.
(e) Section 2 (1) (a) of Act 54 of 1971.
(f) Section 8 of Act 18 of 1936.
(g) Section 7 of Act 53 of 1957.
(h) Section 19*bis* (1) (a) of Act 63 of 1962.
(i) Section 22 (4) (a) of Act 25 of 1969.

DEPARTEMENT VAN GEMEENSKAPSBOU

No. 1849 5 September 1980

WET OP HUURBEHEER, 1976

ALGEHELE ONTBINDING VAN DIE SPRINGBOK HUURRAAD

Hierby word vir algemene inligting bekendgemaak dat die Adjunk-minister van Gemeenskapsbou, kragtens artikel 2 (2) van die Wet op Huurbeheer, 1976 (Wet 80 van 1976), die Springbok Huurraad met ingang van 1 Oktober 1980 ontbind het.

DEPARTMENT OF COMMUNITY DEVELOPMENT

No. 1849 5 September 1980

RENT CONTROL ACT, 1976

ABSOLUTE DISSOLUTION OF THE SPRINGBOK RENT BOARD

It is hereby notified for general information that the Deputy Minister of Community Development, by virtue of section 2 (2) of the Rent Control Act, 1976 (Act 80 of 1976), dissolved the Springbok Rent Board with effect from 1 October 1980.

DEPARTEMENT VAN LANDBOU EN VISSERYE

No. 1848 5 September 1980

TARIEWE.—JOHANNESBURG NASIONALE VARSPRODUKTEMARK—VERBETERING

Die Bylae van Goewermentskennisgewing 1673 van 15 Augustus 1980 word hierby verbeter deur die tarief en beskrywing waar dit voorkom in item 1 (c) (i) (aa) van klousule 2 deur die volgende tarief en beskrywing te vervang:

"2c per houer van nie meer as 15 000 cm³ nie;".

DEPARTMENT OF AGRICULTURE AND FISHERIES

No. 1848 5 September 1980

TARIFFS.—JOHANNESBURG NATIONAL FRESH PRODUCE MARKET—CORRECTION

The Schedule to Government Notice 1673 of 15 August 1980 is hereby corrected by the substitution in the Afrikaans text for the tariff and description as it appears in item 1 (c) (i) (aa) of clause 2 of the following tariff and description:

"2c per houer van nie meer as 15 000 cm³ nie;".

DEPARTEMENT VAN SAMEWERKING EN ONTWIKKELING

No. 1832 5 September 1980

AFSKAFFING VAN DIE KOMMISSARISHOF MAFEKING EN VERANDERING VAN DIE GEBIEDE WAARIN DIE KOMMISSARISHOWE VRYBURG EN MARICO REGSMAG HET

Kragtens die bevoegdheid my verleen by artikel 10 (1) en (3) van die Swart Administrasie Wet, 1927 (Wet 38 van 1927), gee ek, Pieter Gerhardus Jacobus Koornhof, Minister van Samewerking en Ontwikkeling, hierby kennis dat ek met ingang van 20 September 1980—

(a) die Kommissarishof Mafeking, soos ingestel by Proklamasie 298 van 1928, soos verander by Goewermentskennisgewing 471 van 1977, afskaf; en

DEPARTMENT OF CO-OPERATION AND DEVELOPMENT

No. 1832 5 September 1980

ABOLITION OF THE MAFEKING COMMISSIONER'S COURT AND ALTERATION OF THE AREAS IN WHICH THE VRYBURG AND MARICO COMMISSIONER'S COURTS HAVE JURISDICTION

Under and by virtue of the powers vested in me by section 10 (1) and (3) of the Black Administration Act, 1927 (Act 38 of 1927), I, Pieter Gerhardus Jacobus Koornhof, Minister of Co-operation and Development, hereby give notice that, with effect from 20 September 1980, I—

(a) abolish the Mafeking Commissioner's Court, as constituted by Proclamation 298 of 1928, and as altered by Government Notice 471 of 1977; and

(b) die gebiede waarin die Kommissarishowe Vryburg en Marico regsmag het, verander ooreenkomstig Bylae A en B van hierdie kennisgewing onderskeidelik.

P. G. J. KOORNHOF, Minister van Samewerking en Ontwikkeling.

BYLAE A

GEBIED WAARIN DIE KOMMISSARISHOF VRYBURG REGSMAG HET

Gebied 1 van die landdrosdistrik Vryburg.

BYLAE B

GEBIED WAARIN DIE KOMMISSARISHOF MARICO REGSMAG HET

Die landdrosdistrik Marico en Gebied 2 en Gebied 3 van die landdrosdistrik Vryburg.

(b) alter the areas in which the Vryburg and Marico Commissioner's Courts, respectively, have jurisdiction, in accordance with Schedules A and B to this notice.

P. G. J. KOORNHOF, Minister of Co-operation and Development.

SCHEDULE A

AREA IN WHICH THE VRYBURG COMMISSIONER'S COURT HAS JURISDICTION

Area 1 of the Magisterial District of Vryburg.

SCHEDULE B

AREA IN WHICH THE MARICO COMMISSIONER'S COURT HAS JURISDICTION

The Magisterial District of Marico and Area 2 and Area 3 of the Magisterial District of Vryburg.

No. 1839 5 September 1980

KWANDEBELE-WET OP DIE BETALING VAN SALARISSE EN TOELAES AAN LEDE VAN DIE WETGEWENDE VERGADERING, 1980 (WET 3 VAN 1980)

Hierby word bekendgemaak dat die Staatspresident sy goedkeuring geheg het aan die volgende Wet wat deur die KwaNdebele- Wetgewende Vergadering aangeneem is en wat hierby vir algemene inligting gepubliseer word:

WET

Om voorsiening te maak vir die betaling van salarisse en toelaes aan lede van die Wetgewende Vergadering en die betaling van 'n toelae aan gevolmagtigdes van kapteins en aangeleenthede wat daarmee in verband staan

Daar word bepaal deur die KwaNdebele- Wetgewende Vergadering, soos volg:

Woordomskrywings

1. In hierdie Wet, tensy uit die samehang anders blyk, het 'n woord of uitdrukking waaraan 'n betekenis in die KwaNdebele-grondwetproklamasie, 1979 (Proklamasie R. 205 van 1979) geheg word, die betekenis aldus daaraan geheg en beteken—

"assistent-sweep" 'n sweep (behalwe 'n hoofsweep van enige politieke party in die Wetgewende Vergadering veerteenwoordig wat aan die begin van elke sessie of na gelang van omstandighede deur die leier van die betrokke party in die Wetgewende Vergadering aangewys word en skriftelik deur die Speaker goedgekeur word as redelikerwys nodig vir die vlot werking van die Wetgewende Vergadering: Met dien verstande dat hoogstens een assistent-sweep vir elke sodanige politieke party aldus geodgekeur word;

"Grondwetproklamasie" die KwaNdebele-grondwetproklamasie, 1979 (Proklamasie R. 205 van 1979);

"Hoofsweep van die amptelike Opposisie" 'n hoofsweep wat deur die lede van die Wetgewende Vergadering wat die amptelike Opposisie uitmaak, uit die geledere aangewys word;

"Hoof-Uitvoerende Raadslid" die Hoof- Uitvoerende Raadslid verkies ingevolge artikel 13 van die Grondwetproklamasie;

"Uitvoerende Raadslid" 'n Uitvoerende Raadslid aangestel kragtens artikel 14 van die Grondwetproklamasie.

No. 1839 5 September 1980

KWANDEBELE PAYMENT OF SALARIES AND ALLOWANCES TO MEMBERS OF THE LEGISLATIVE ASSEMBLY ACT, 1980 (ACT 3 OF 1980)

It is hereby notified that the State President has approved the following Act which was passed by the KwaNdebele Legislative Assembly and which is hereby published for general information:

ACT

To provide for the payment of salaries and allowances to members of the Legislative Assembly and for the payment of an allowance to deputies of chiefs and for matters incidental thereto

Be it enacted by the KwaNdebele Legislative Assembly, as follows:

Definitions

1. In this Act, unless the context otherwise indicates, any word or expression to which a meaning has been assigned in the KwaNdebele Constitution Proclamation, 1979 (Proclamation R. 205 of 1979), shall bear the meaning so assigned thereto, and—

"assistant whip" means a whip (other than a Chief Whip) for any political party represented in the Legislative Assembly designated by the leader of the party concerned and approved in writing by the Speaker at the commencement of each session, or as circumstances require, as being reasonably necessary for the smooth working of the Legislative Assembly: Provided that not more than one assistant whip for any such political party shall be so approved;

"Chief Executive Councillor" means the Chief Executive Councillor elected in terms of section 13 of the Constitution Proclamation;

"Chief Government Whip" means a chief whip designated by the Chief Executive Councillor from the ranks of the members of the Legislative Assembly;

"Chief Whip of the official Opposition" means a chief whip designated from amongst the rank of the members of the Legislative Assembly who form the official Opposition, by such members;

"Constitution Proclamation" means the KwaNdebele Constitution Proclamation, 1979 (Proclamation R. 205 of 1979);

"Executive Councillor" means an Executive Councillor appointed under section 14 of the Constitution Proclamation.

Salarisse van lede

2. Daar is betaalbaar—

(a) aan die Hoof- Uitvoerende Raadslid, 'n salaris van R23 400 per jaar;

(b) aan elke Uitvoerende Raadslid (behalwe die Hoof- Uitvoerende Raadslid), 'n salaris van R21 192 per jaar;

(c) aan die Speaker, 'n salaris van R6 840 per jaar;

(d) aan die Adjunk-speaker, 'n salaris van R6 300 per jaar;

(e) aan die Regeringshoofsweep en die Hoofsweep van die amptelike Opposisie in die Wetgewende Vergadering, 'n salaris van R6 300 per jaar;

(f) aan elke assistent-sweep, 'n salaris van R5 760 per jaar;

(g) aan elke lid van die Wetgewende Vergadering [behalwe iemand in enige van die paragrawe (a) tot en met (f) bedoel], 'n salaris van R5 256 per jaar.

Nie-belasbare toelaag

3. Daar is betaalbaar—

(a) aan die Hoof- Uitvoerende Raadslid, 'n nie-belasbare toelaag van R1 980 per jaar;

(b) aan elke Uitvoerende Raadslid (behalwe die Hoof- Uitvoerende Raadslid), 'n nie-belasbare toelaag van R1 440 per jaar.

Toelaes van lede

4. (1) Benewens die salarisse en nie-belasbare toelaes waarvoor in artikel 2 en 3 onderskeidelik voorsiening gemaak word, is daar, behoudens die bepalings van subartikels (2) en (3) en artikel 5, uit gelde wat die Wetgewende Vergadering vir dié doel bewillig, betaalbaar—

(a) aan elke lid van die Wetgewende Vergadering (behalwe 'n lid van die Uitvoerende Raad), onderworpe aan die voorwaardes wat die Speaker van die Wetgewende Vergadering bepaal—

(i) 'n sessietoelae van R10 per dag;

(ii) 'n vervoertoelae van 10c per kilometer ten opsigte van sy reis van sy tuiste na die setel van die Regering aan die begin van 'n sessie en die terugreis aan die einde van sodanige sessie;

(b) aan elke lid van die Wetgewende Vergadering (behalwe 'n lid van die Uitvoerende Raad)—

(i) wat as lid van 'n regeringskommissie of -komitee (behalwe 'n sessiekomitee) aangestel is en wat in die vervulling van sy pligte as lid van sodanige kommissie of komitee van sy gewone verblyfplek afwesig is; of

(ii) aan wie die Wetgewende Vergadering of die Uitvoerende Raad of, waar die omstandighede dringend is, die Hoof- Uitvoerende Raadslid, 'n plig opgedra het en wat in die vervulling van sodanige plig van sy gewone verblyfplek afwesig is;

onderworpe aan die voorwaardes wat die Hoof- Uitvoerende Raadslid bepaal—

(aa) 'n verblyftoelae van R10 per dag van 24 uur vir die tydperk waartydens die lid noodsaaklikerwys van sy gewone woonplek op sodanige diens afwesig is: Met dien verstande dat, vir elke volle uur van afwesigheid langer as 24 uur of 'n veelvoud van 24 uur, aan 'n lid een vier-en-twintigste van die daaglikse tarief betaal kan word: Met dien verstande voorts dat vir 'n afwesigheid van minder as 24 uur, redelike werklike persoonlike uitgawes van hoogstens R10 betaal kan word vir voedsel en rusgeriewe; en

Salaries of members

2. (1) There shall be payable—

(a) to the Chief Executive Councillor, a salary of R23 400 per annum;

(b) to every Executive Councillor (other than the Chief Executive Councillor), a salary of R21 192 per annum;

(c) to the Speaker, a salary of R6 840 per annum;

(d) to the Deputy Speaker, a salary of R6 300 per annum;

(e) to the Chief Government Whip and the Chief Whip of the official Opposition in the Legislative Assembly, a salary of R6 300 per annum;

(f) to each assistant whip, a salary of R5 760 per annum;

(g) to every member of the Legislative Assembly [other than a person referred to in any of the paragraphs (a) to (f) inclusive] a salary of R5 256 per annum.

Non-taxable allowance

3. There shall be payable—

(a) to the Chief Executive Councillor, a non-taxable allowance of R1 980 per annum;

(b) to every Executive Councillor (other than the Chief Executive Councillor), a non-taxable allowance of R1 440 per annum.

Allowances of members

4. (1) In addition to the salaries and non-taxable allowances provided for in sections 2 and 3 respectively, there shall, subject to the provisions of subsections (2) and (3) and section 5, be payable, out of moneys appropriated by the Legislative Assembly for that purpose—

(a) to every member of the Legislative Assembly (other than a member of the Executive Council), subject to such conditions as the Speaker of the Legislative Assembly may determine—

(i) a session allowance of R10 per day;

(ii) a transport allowance of 10c per kilometre in respect of his journey from his home to the seat of the Government at the beginning of any session and the return journey at the end of such session;

(b) to every member of the Legislative Assembly (other than a member of the Executive Council)—

(i) who has been appointed as a member of any government commission or committee (other than a sessional committee) and who is absent from his ordinary place of residence in the performance of his duties as a member of such commission or committee; or

(ii) to whom the Legislative Assembly or the Executive Council or, where circumstances are urgent, the Chief Executive Councillor, has assigned a duty and who is absent from his ordinary place of residence in the performance of such duty;

subject to such conditions as the Chief Executive Councillor may determine—

(aa) a subsistence allowance of R10 per day of 24 hours for the period during which the member is necessarily absent from his usual place of residence on such duty: Provided that, for each complete hour of absence in excess of 24 hours or a multiple of 24 hours, a member may be paid one twenty-fourth of the daily rate: Provided further that for an absence of less than 24 hours, reasonable actual personal expenses not exceeding R10 may be paid in respect of food and facilities for resting; and

(bb) 'n vervoertoelae van 10c vir elke kilometer of gedeelte daarvan noodsaaklikerwys afgelê met die kortste beskikbare roete van die lid se gewone woonplek af tot by die naaste openbare vervoer, as daar is (met uitsondering van huurmotors) en terug en die noodsaaklike uitgawes aan sodanige openbare vervoer aangegaan: Met dien verstande dat waar sodanige openbare vervoer nie beskikbaar is nie, die lid betaal kan word teen die tarief van 10c vir elke kilometer of gedeelte daarvan van die gesamentlike reis met die korste beskikbare roete van die lid se gewone woonplek af na sy bestemming en terug na genoemde woonplek: Met dien verstande voorts dat die betaling van die vervoertoelae geskied alleen ten opsigte van een retoerreis gedurende enige een week waarin die kommissie of komitee in sitting is;

(c) aan elke lid van die Uitvoerende Raad, ten opsigte van sy afwesigheid op amptelike diens van die setel van die Regereing, 'n verblyftoelae van R15 per dag van 24 uur vir die tydperk waartydens die lid noodsaaklikerwys van sy gewone woonplek op sodanige diens afwesig is: Met dien verstande dat, vir elke volle uur van afwesigheid langer as 24 uur of 'n veelvoud van 24 uur, aan 'n lid een vier-en-twintigste van die daaglikse tarief betaal kan word: Met dien verstande voorts dat, vir 'n afwesigheid van minder as 24 uur, redelike werklike persoonlike uitgawes van hoogstens R15 betaal kan word vir voedsel en rusgeriewe.

(2) Die in subartikel (1) (a) (i) bedoelde sessietoelae word ten opsigte van elke dag gedurende 'n sessie, van die eerste sittingsdag tot en met die laaste sittingsdag, betaal: Met dien verstande dat indien die Wetgewende Vergadering te eniger tyd gedurende sodanige sessie vir 'n langer aaneenlopende tydperk as sewe dae verdaag, geen sodanige toelae ten opsigte van die verdagingstydperk betaal word nie, maar 'n bykomstige vervoertoelae ooreenkomstig subartikel (1) (a) (ii) betaal word.

(3) Indien die werklike verblyfkoste van 'n lid die bedrag waarop hy kragtens subartikel (1) (b) (aa) of (1) (c), na gelang van die geval, geregtig is, oorskry, kan die Hoof- Uitvoerende Raadslid die betaling aan sodanige lid van 'n bedrag van hoogstens die bedrag van sodanige werklike verblyfkoste goedkeur.

Aftrekkings weens afwesigheid

5. Ten opsigte van elke dag waarop 'n lid van die Wetgewende Vergadering (behalwe 'n lid van die Uitvoerende Raad, die Speaker of die Adjunkspeaker) versuim om 'n sitting van die Wetgewende Vergadering by te woon, word die bedrag van R10 afgetrek van die bedrag wat ingevolge die bepalings van hierdie Wet aan hom betaalbaar is: Met dien verstande dat so 'n lid van aftrekkings weens sodanige versuim vrygestel word—

(a) ten opsigte van enige dag waarop hy as lid van 'n komitee van die Wetgewende Vergadering 'n vergadering van daardie komitee bywoon;

(b) wanneer sy afwesigheid te wyte is aan sy siekte of aan die dagvaarding of getuie-dagvaarding van 'n bevoegde hof (behalwe 'n dagvaarding om the verskyn op 'n kriminele aanklag waarop hy skuldig bevind word);

(c) wanneer sy afwesigheid veroorsaak word deur die dood of ernstige siekte van sy gade of 'n persoon met wie hy 'n gebruiklike verbinding aangegaan het of sy kind of ouer en sodanige afwesigheid verskoon word deur die Sessiekomitee oor Reglement van Orde en Interne Reëlings.

(bb) a transport allowance of 10c for each kilometre or part thereof necessarily travelled by the shortest available route from the member's usual place of residence to the nearest public transport, if any, (excluding taxis) and back and the necessary expenditure incurred on such public transport: Provided that where such public transport is not available, the member may be paid at the rate of 10c for each kilometre or part thereof for the combined journey by the shortest available route from the member's usual place of residence: Provided further that payment of the transport allowance shall be made in respect of one return journey only in any one week during which the commission or committee is in session;

(c) to every member of the Executive Council, in respect of his absence on official duty from the seat of the Government, a subsistence allowance of R15 per day of 24 hours for the period during which the member is necessarily absent from his usual place of residence on such duty: Provided that for each complete hour of absence in excess of 24 hours or a multiple of 24 hours, a member may be paid one twenty-fourth of the daily rate: Provided further that, for an absence of less than 24 hours, reasonable actual personal expenses not exceeding R15 may be paid in respect of food and facilities for resting.

(2) The session allowance referred to in subsection (1) (a) (i) shall be paid in respect of each day during any session, from the first sitting day to the last sitting day, inclusive: Provided that if the Legislative Assembly at any time during such session adjourns for a continuous period of more than seven days, no such allowance shall be paid in respect of the period of adjournment, but an additional transport allowance shall be paid in accordance with subsection (1) (a) (ii).

(3) If the actual subsistence expenses of a member exceed the sum to which he is entitled under subsection (1) (b) (aa) or (1) (c), as the case may be, the Chief Executive Councillor may approve the payment to such member of an amount not exceeding the amount of such actual subsistence expenses.

Deductions on account of absence

5. In respect of every day during which any member of the Legislative Assembly (other than a member of the Executive Council, the Speaker or Deputy Speaker) fails to attend a sitting of the Legislative Assembly, there shall be deducted the sum of R10 from the amount payable to him under the provisions of this Act: Provided that such member shall be exempted from deductions on account of such failure—

(a) in respect of any day on which he attends as a member of any committee of the Legislative Assembly, a meeting of that committee;

(b) when his absence is due to his illness or to the summons or subpoena of a competent court (except a summons to answer a criminal charge upon which he is convicted);

(c) when his absence is due to the death or serious illness of his spouse or any person with whom he has contracted a customary union or his child or parent and such absence is condoned by the Sessional Committee on Rules of Procedure and Internal Arrangements.

Metode van betaling van salarisse en nie-belasbare toelaes

6. (1) Met inagneming van die verbeurde bedrae, as daar is betaal die Direkteur van die Departement van Owerheidsake en Finansies aan elke lid van die Wetgewende Vergadering (behalwe 'n lid van die Uitvoerende Raad) in maandelikse paaiemente die salaris waarop so 'n lid kragtens hierdie Wet geregtig is en die eerste maand word gereken—

(a) in die geval van 'n lid wat kragtens artikel 2 van Bylae II van die Grondwetproklamasie aangewys is, vanaf die dag waarop hy aldus aangewys is;

(b) in die geval van 'n lid ingevolge die bepalings van artikel 7 van Bylae II van die Grondwetproklamasie aangewys is, vanaf die dag waarop hy aldus aangewys is;

(c) in die geval van die Speaker en die Adjunkspeaker van die Wetgewende Vergadering, vanaf die datum van verkiesing as sodanig.

(2) Die Direkteur van die Departement van Owerheidsake en Finansies betaal aan die Hoof- Uitvoerende Raadslid in maandelikse paaiemente die salaris en nie-belasbare toelae waarop hy kragtens hierdie Wet geregtig is, gereken vanaf die dag waarop hy die eed in artikel 15 van Bylae II van die Grondwetproklamasie bedoel afgelê en onderteken het, en die Direkteur van elke ander departement betaal aan die Uitvoerende Raadslid van die betrokke departement in maandelikse paaiemente die salaris en nie-belasbare toelae waarop hy kragtens hierdie Wet geregtig is, gereken vanaf die dag waarop hy die eed in artikel 15 van Bylae II van die Grondwetproklamasie bedoel, afgelê en onderteken het.

Salarisse en nie-belasbare toelaes van lede maak vorderings uit teen Inkomstefonds

7. Die bedrag van die salarisse en nie-belasbare toelaes wat kragtens hierdie Wet betaalbaar is, maak 'n jaarlikse vordering teen die Inkomstefonds van KwaNdebele uit en die bepalings van hierdie artikel word geag 'n bewilliging van elke sodanige bedrag te wees.

Benoeming van gevolmagtigde deur Kaptein

8. 'n Kaptein wat tot Hoof- Uitvoerende Raadslid verkies word of wat as Uitvoerende Raadslid aangestel word, kan 'n gevolmagtigde benoem om hom behulpsaam te wees met die verrigting van ampspligte verbonde aan sy kapteinskap, en aan sodanige gevolmagtigde word gedurende sy ampstermyn deur die Direkteur van die Departement van Owerheidsake en Finansies 'n toelae van hoogstens R600 per jaar betaal, wat die Uitvoerende Raad bepaal.

Staking van betaling aan lid wat 'n Kaptein of hoofman is van sekere toelaes betaalbaar ingevolge Proklamasie 110 *van* 1957.

9. Indien 'n kaptein of hoofman 'n lid van die Wetgewende Vergadering word, word die betaling van enige toelae (behalwe 'n aftredingstoelae) wat ingevolge regulasie 24 of 25, na gelang van die geval, van Proklamasie 110 van 1957 aan hom betaalbaar is, op die datum waarop hy 'n lid van die Wetgewende Vergadering word, gestaak.

Herroeping van Deel II *van Bylae van Proklamasie R.* 207 *van* 1979

10. Deel II van die Bylae van die Proklamasie op die Betaling van Salarisse en Toelaes aan Lede van die KwaNdebele- Wetgewende Vergadering en Toelaes

Method of payment of salaries and non-taxable allowances

6. (1) Subject to the deductions incurred, if any, the Director of the Department of Authority Affairs and Finance shall pay to every member of the Legislative Assembly (other than a member of the Executive Council) the salary to which such member is entitled under this Act in monthly instalments, the first month to be reckoned—

(a) in the case of a member designated under section 2 of Schedule II to the Constitution Proclamation, from the day on which he was so designated;

(b) in the case of a member designated in terms of the provisions of section 7 of Schedule II to the Constitution Proclamation, from the day on which he was so designated;

(c) in the case of the Speaker and Deputy Speaker of the Legislative Assembly, from the date of their election as such.

(2) The Director of the Department of Authority Affairs and Finance shall pay to the Chief Executive Councillor the salary and non-taxable allowance to which he is entitled under this Act, in monthly instalments, to be reckoned from the day on which he made and subscribed to the oath referred to in section 15 of Schedule II to the Constitution Proclamation and the Director of every other department shall pay to the Executive Councillor of the department concerned the salary and non-taxable allowance to which he is entitled under this Act, in monthly instalments, to be reckoned from the day on which he made and subscribed to the oath referred to in section 15 of Schedule II to the Constitution Proclamation.

Salaries and non-taxable allowances of members chargeable to Revenue Fund

7. The amount of the salaries and non-taxable allowances payable under this Act shall be charged annually to the Revenue Fund of KwaNdebele and the provisions of this section shall be deemed to be an appropriation of every such amount.

Nomination of deputy by Chief

8. A chief who is elected Chief Executive Councillor or is appointed Executive Councillor may nominate a deputy to assist him in the performance of the official duties attached to his chieftainship, and such deputy shall, during the period of his office, be paid by the Director of the Department of Authority Affairs and Finance an allowance not exceeding six hundred rand per annum, to be determined by the Executive Council.

Cessation of payment to member who is a Chief or headman of certain allowances payable in terms of Proclamation 110 *of* 1957

9. If a Chief or headman becomes a member of the Legislative Assembly, the payment of any allowance (other than a retiring allowance) which is payable to him in terms of regulation 24 or 25, as the case may be, of Proclamation 110 of 1957, shall cease from the date on which he becomes a member of the Legislative Assembly.

Repeal of Part II *of Schedule of Proclamation R.* 207 *of* 1979

10. Part II of the Schedule to the Payment of Salaries and Allowances to Members of the KwaNdebele Legislative Assembly and Allowances to Members of Regional Authorities in KwaNdebele Proclamation,

aan Lede van Streeksowerhede in KwaNdebele, 1979 (hierna die Proklamasie genoem), word hierby herroep.

Vervanging van artikel 13 van Proklamasie R. 207 van 1979

11. Artikel 13 van die Proklamasie word deur die volgende artikel vervang:

"Kort titel en inwerkingtreding

13. Hierdie Proklamasie heet die Proklamasie op die Betaling van Toelaes aan Lede van Streeksowerhede in KwaNdebele, 1979, en tree in werking op 1 Oktober 1979.".

Kort titel en inwerkingtreding

12. Hierdie Wet heet die KwaNdebele-wet op die Betaling van Salarisse en Toelaes aan Lede van die Wetgewende Vergadering, 1980, en word geag op 1 April 1980 in werking te getree het.

No. 1840 5 September 1980

KWANDEBELE-WET OP ALGEMENE LENINGS, 1980 (WET 2 VAN 1980)

Hierby word bekendgemaak dat die Staatspresident sy goedkeuring geheg het aan die volgende Wet wat deur die KwaNdebele- Wetgewende Vergadering aangeneem is en wat hierby vir algemene inligting gepubliseer word:

WET

Om voorsiening te maak vir die aangaan van lenings, die bedinge en voorwaardes in verband met sodanige lenings, die beheer en terugbetaling van gelde aldus geleen; en om voorsiening te maak vir aangelegenhede wat daarmee in verband staan

Daar word bepaal deur die KwaNdebele- Wetgewende Vergadering, soos volg:

Woordomskrywing

1. In hierdie Wet, tensy uit die samehang anders blyk, beteken—

"boekjaar" die tydperk vanaf 1 April in enige jaar tot en met 31 Maart in die daaropvolgende jaar;

"Grondwet" die Grondwet van die Swart State, 1971 (Wet 21 van 1971);

"inkomste uit eie bronne" alle inkomste wat ingevolge die bepalings van artikel 6 van die Grondwet in die Inkomstefonds van KwaNdebele gestort word, maar uitgesonderd inkomste verkry uit skenkings, lenings en geld deur die Parlement van die Republiek ingevolge subartikel (2) (d) van genoemde artikel bewillig;

"kapitaalwerke" werke van duursame of permanente aard wat kapitaalinvestering van meer as R15 000 per projek verg;

"KwaNdebele" die gebied bedoel in paragraaf (a) van die KwaNdebele-grondwetproklamasie, 1979 (Proklamasie R. 205 van 1979);

"Regering" die Regering van KwaNdebele;

"totale leningskuld" die totale bedrag van lenings wat op enige tydstip ingevolge hierdie Wet aangegaan en nog verskuldig is;

"Uitvoerende Raad" die Uitvoerende Raad van KwaNdebele saamgestel kragtens artikel 11 van Deel II van Bylae II van die KwaNdebele-grondwetproklamasie, 1979 (Proklamasie R. 205 van 1979).

Opbrengs van lenings word in die Inkomstefonds gestort

2. Die opbrengs van lenings wat kragtens hierdie Wet aangegaan word, word in die Inkomstefonds van KwaNdebele gestort.

1979 (here in after referred to as the Proclamation) is hereby repealed.

Substitution of section 13 of Proclamation R. 207 of 1979

11. The following section is hereby substituted for section 13 of the Proclamation:

"Short title and commencement

13. This Proclamation shall be called the Payment of Allowances to Members of Regional Authorities in KwaNdebele Proclamation, 1979, and shall come into operation on 1 October 1979.".

Short title and commencement

12. This Act shall be called the KwaNdebele Payment of Salaries and Allowances to Members of the Legislative Assembly Act, 1980, and shall be deemed to have come into operation on 1 April 1980.

No. 1840 5 September 1980

KWANDEBELE GENERAL LOANS ACT, 1980 (ACT 2 OF 1980)

It is hereby notified that the State President has approved of the following Act which was passed by the KwaNdebele Legislative Assembly and which is hereby published for general information:

ACT

To provide for the raising of loans, the terms and conditions applicable to such loans, the control and repayment of the moneys so raised; and to provide for matters incidental thereto

Be it enacted by the KwaNdebele Legislative Assembly, as follows:

Definitions

1. In this Act unless the context otherwise indicates—

"capital works" means works of a durable or permanent nature which require capital investment exceeding R15 000 per project;

"Constitution Act" means the Black States Constitution Act, 1971 (Act 21 of 1971);

"Executive Council" means the Executive Council of KwaNdebele constituted under section 11 of Part II of Schedule II to the KwaNdebele Constitution Proclamation 1979 (Proclamation R. 205 of 1979);

"financial year" means the period from 1 April in any year to 31 March in the next succeeding year, both days inclusive;

"Government" means the Government of KwaNdebele;

"KwaNdebele" means the area referred to in paragraph (a) of the KwaNdebele Constitution Proclamation, 1979 (Proclamation R. 205 of 1979);

"own sources of revenue" means all revenue paid into the Revenue Fund of KwaNdebele in terms of section 6 of the Constitution Act, but excluding revenue derived from donations, loans and money appropriated by Parliament of the Republic in terms of subsection (2) (d) of the said section;

"total loan liability" means the total amount for which loans have been raised at any time in terms of this Act and which is still due.

Proceeds of loans raised to be paid into the Revenue Fund

2. The proceeds of loans raised under this Act shall be paid into the Revenue Fund of KwaNdebele.

Algemene leningsbevoegdheid

3. Behoudens die bepalings van hierdie Wet en die Grondwet, kan die Hoof- Uitvoerende Raadslid met die voorafverkreë goedkeuring van die Uitvoerende Raad, van tyd tot tyd die somme geld leen wat hy wenslik ag vir die finansiering van kapitaalwerke: Met dien verstande dat behalwe met die toestemming in item 31A van Bylae 1 by die Grondwet bedoel—

(a) geen lening aangegaan word wat veroorsaak dat die totale leningskuld van die Regering te eniger tyd 'n bedrag gelykstaande aan die inkomste uit die bronne gedurende die voorafgaande boekjaar, te bowe gaan nie; en

(b) geen lening gedurende enige boekjaar aangegaan word wat veroorsaak dat die totale som van lenings gedurende so 'n boekjaar aangegaan eenvyfde van die bedrag in paragraaf (a) bedoel, te bowe gaan nie.

Aangaan van lenings

4. Behoudens die bepalings van hierdie Wet en die Grondwet, kan die Hoof- Uitvoerende Raadslid lenings aangaan op die wyse wat hy wenslik ag, en enige bedrag aldus geleen en die rente daarop, is 'n las teen en betaalbaar uit die bates en die inkomste van die Regering.

Delging, rente en koste

5. 'n Lening ingevolge hierdie Wet aangegaan, word terugbetaal en die rente daarop en die noodsaaklike koste in verband met die aangaan daarvan word betaal uit fondse wat die Wetgewende Vergadering vir die doel bewillig.

Verstrekking van besonderhede

6. (1) Wanneer 'n lening ingevolge hierdie Wet aangegaan is, word die Ouditeur-generaal onverwyld skriftelik van die bedrag en die voorwaardes van so 'n lening in kennis gestel.

(2) Die Hoof- Uitvoerende Raadslid lê so gou doenlik na 31 Maart in elke jaar 'n opgaaf van lenings, as daar is, wat gedurende die voorafgaande boekjaar aangegaan is, in die Wetgewende Vergadering ter Tafel, en dui ten opsigte van elke afsonderlike lening aan—

(a) die datum waarop die lening aangegaan is;

(b) die bedrag van die lening;

(c) die doel waarvoor die lening aangegaan is;

(d) die toepaslike leningsvoorwaardes;

(e) die totale leningskuld nadat die lening aangegaan is;

(f) die instansie by wie die lening aangegaan is.

Regulasies

7. Die Hoof- Uitvoerende Raadslid kan, met die goedkeuring van die Uitvoerende Raad, regulasies uitvaardig waarby voorgeskryf word—

(a) die prosedure wat by die uitvoering van die bepalings van hierdie Wet gevolg moet word en die vorms wat daarby gebruik moet word;

(b) die aanstelling van 'n agent vir die verrigting van enige handeling in verband met die aangaan, beheer en delging van lenings wat ingevolge hierdie Wet deur hom of sy Departement verrig kan of moet word; en

(c) enige ander aangeleentheid wat hy nodig ag ten einde die oogmerke van hierdie Wet te bereik.

Kort titel

8. Hierdie Wet heet die KwaNdebele-wet op Algemene Lenings, 1980.

General power to borrow money

3. Subject to the provisions of this Act and the Constitution Act, the Chief Executive Councillor may, with the prior approval of the Executive Council, from time to time borrow such sums of moneys as he may deem desirable to finance capital works: Provided that, except with the consent referred to in item 31A of Schedule 1 to the Constitution Act—

(a) no loan shall be raised which will cause the total loan liability of the Government to exceed, at any time, an amount equal to its own sources of revenue during the preceding financial year; and

(b) no loan shall be raised during any financial year which will cause the total amount of loans raised during such financial year to exceed one-fifth of the amount referred to in paragraph (a).

Raising of loans

4. Subject to the provisions of this Act and the Constitution Act, the Chief Executive Councillor may raise loans in such manner as he may deem desireable and any amount so borrowed and the interest thereon, shall be a charge against and payable out of the assets and revenue of the Government.

Redemption, interest and costs

5. Any loan raised in terms of this Act shall be repaid, and the interest thereon and expenses necessarily incurred in connection with the raising thereof shall be paid out of funds appropriated by the Legislative Assembly.

Furnishing of details

6. (1) Whenever a loan has been raised in terms of this Act the Auditor-General shall forthwith be notified in writing of the amount and conditions of such loan.

(2) As soon as practicable after 31 March in each year the Chief Executive Councillor shall lay upon the Table of the Legislative Assembly a statement of loans, if any, raised during the preceding financial year, indicating in respect of each individual loan—

(a) the date on which such loan was raised;

(b) the amount of such loan;

(c) the purpose for which such loan was raised;

(d) the conditions applicable to such loan;

(e) the total loan liability after such loan was raised;

(f) the instance from which such loans was raised.

Regulations

7. The Chief Executive Councillor may, with the approval of the Executive Council, make regulations prescribing—

(a) the procedure which shall be followed and the forms which shall be used in carrying out the provisions of this Act;

(b) the appointment of an agent to perform any act in respect of the raising, control and redemption of loans which he or his Department may or is required to perform in terms of this Act; and

(c) any other matter which he may deem necessary or expedient to achieve the objects of this Act.

Short title

8. This Act shall be called the KwaNdebele General Loans Act, 1980.

University of Pretoria

No. 1846 5 September 1980

ADMINISTRASIERAAD VIR DIE OOS-KAAPGEBIED

(1) BESKRYWING VAN SWART WOONGEBIED GELEË TE JAMESTOWN

(2) BESKRYWING VAN SWART TEHUIS GELEË TE JAMESTOWN

Ek, George de Villiers Morrison, Adjunk-minister van Samewerking, handelende namens en in opdrag van die Minister van Samewerking en Ontwikkeling—

(a) maak hierby bekend dat die grond beskryf in die Bylae hiervan, kragtens die bevoegdheid genoemde Minister verleen by artikel 2 (1)*bis* van die Swartes (Stadsgebiede) Konsolidasiewet, 1945 (Wet 25 van 1945), kragtens artikel 2 (1) (a) en (b) van genoemde Wet as 'n Swart woongebied bepaal en afgesonder is; en

(b) maak hierby bekend dat die grond beskryf in die Bylae hiervan, geleë in die Swart woongebied bedoel in paragraaf (a) hierbo, kragtens die bevoegdheid genoemde Minister verleen by artikel 2 (1)*bis* van bogenoemde Wet, kragtens artikel 2 (1) (c) van bogenoemde Wet as 'n tehuis vir Swart mans bepaal en afgesonder is.

G. DE V. MORRISON, Adjunk-minister van Samewerking.

(Lêer A6/5/2/J3)

BYLAE

'n Sekere stuk grond, groot 99,3119 hektaar, synde Erf 414 geleë in die munisipale gebied van Jamestown, binne die administrasiegebied van die Administrasieraad vir die Oos-Kaapgebied, soos aangetoon op Kaart LG 7928/71 wat deur die Landmeter-generaal goedgekeur is.

No. 1846 5 September 1980

ADMINISTRATION BOARD FOR THE EASTERN CAPE

(1) DEFINITION OF BLACK RESIDENTIAL AREA SITUATE AT JAMESTOWN

(2) DEFINITION OF BLACK HOSTEL SITUATE AT JAMESTOWN

I, George de Villiers Morrison, Deputy Minister of Co-operation, acting on behalf of and by direction of the Minister of Co-operation and Development—

(a) hereby announce that the land described in the Schedule hereto, has under the powers vested in the said Minister by section 2 (1)*bis* of the Blacks (Urban Areas) Consolidation Act, 1945 (Act 25 of 1945), been defined and set apart as a Black residential area under section 2 (1) (a) and (b) of the said Act; and

(b) hereby announce that the land described in the Schedule hereto, situate in the Black residential area referred to in paragraph (a) above, has under the powers vested in the said Minister by section 2 (1)*bis* of the above-mentioned Act, been defined and set apart as a hostel for Black men under section 2 (1) (c) of the said Act.

G. DE V. MORRISON, Deputy Minister of Co-operation.

(File A6/5/2/J3)

SCHEDULE

A certain area of land, 99,3119 hectares in extent, being Erf 414, situate in the municipal area of Jamestown, within the administration area of the Administration Board for the Eastern Cape Area, as indicated on Diagram SG 7928/71, which was approved by the Surveyor-General.

DEPARTEMENT VAN WATERWESE, BOSBOU EN OMGEWINGSBEWARING

No. 1841 5 September 1980

HOUTGRADERING

Kragtens die bevoegdheid aan my gedelegeer deur die Minister van Waterwese, Bosbou en Omgewingsbewaring ingevolge artikel 3 (1) van die Boswet, 1968 (Wet 72 van 1968), om die bevoegdheid wat by artikel 10 van genoemde Wet aan hom verleen is, namens hom uit te oefen, word hierby bekendgemaak dat ek voornemens is om 'n kennisgewing uit te vaardig soos in die Aanhangsel hiervan uiteengesit.

Alle belanghebbendes wat besware teen die voorgestelde kennisgewing het, word versoek om sodanige besware skriftelik by die Adjunk-direkteur-generaal: Direktoraat van Bosbou en Omgewingsbewaring, Privaatsak X313, Pretoria, 0001, binne dertig (30) dae vanaf die datum van publikasie hiervan in te dien.

A. E. SONNTAG, Adjunk-direkteur-generaal: Direktoraat van Bosbou en Omgewingsbewaring.

AANHANGSEL

Goewermentskennisgewing 651 van 30 Maart 1979 word hierby soos volg gewysig:

1. Vervang die datum "1 April 1980" in paragraaf 8 deur die datum "1 Februarie 1981".

DEPARTMENT OF WATER AFFAIRS, FORESTRY AND ENVIRONMENTAL CONSERVATION

No. 1841 5 September 1980

TIMBER GRADING

Under the powers delegated to me by the Minister of Water Affairs, Forestry and Environmental Conservation in terms of section 3 (1) of the Forest Act, 1968 (Act 72 of 1968), to exercise on his behalf the powers conferred on him by section 10 of the said Act, it is hereby notified that I propose to issue a notice as set out in the Appendix hereto.

All interested persons who have any objection to the proposed notice are invited to lodge such objections in writing with the Deputy Director-General: Directorate of Forestry and Environmental Conservation, Private Bag X313, Pretoria, 0001, within thirty (30) days of the date of publication hereof.

A. E. SONNTAG, Deputy Director-General: Directorate of Forestry and Environmental Conservation.

APPENDIX

Government Notice 651 of 30 March 1979 is hereby amended as follows:

1. Substitute the date "1 February 1981" for the date "1 April 1980" in paragraph 8.

University of Fort Hare

ALGEMENE KENNISGEWINGS

KENNISGEWING 611 VAN 1980

DEPARTEMENT VAN FINANSIES

VERKOOPBELASTINGWET, 1978

HERSTEL VAN REGISTRASIE VAN ONDERNEMER

Ek, Willem Jan Harm van der Walt, Kommissaris van Binnelandse Inkomste, gee hierby kennis ingevolge artikel 13 (6) van die Verkoopbelastingwet, 1978 (Wet 103 van 1978) dat, volgende op die intrekking van die verkoopbelastingregistrasiesertifikaat uitgereik aan die ondernemer vermeld in die Bylae hiervan, soos bekendgemaak by Kennisgewing 85 van 1980 gepubliseer in *Staatskoerant* 6833 van 1 Februarie 1980, die registrasie van genoemde ondernemer herstel is ten gevolge waarvan 'n verkoopbelastingregistrasiesertifikaat waarop die nommer aangegee in die derde kolom van genoemde Bylae verskyn, aan bedoelde ondernemer ingevolge artikel 12 van genoemde Wet uitgereik is.

W. J. H. VAN DER WALT, Kommissaris van Binnelandse Inkomste.

GENERAL NOTICES

NOTICE 611 OF 1980

DEPARTMENT OF FINANCE

SALES TAX ACT, 1978

REINSTATEMENT OF REGISTRATION OF VENDOR

I, Willem Jan Harm van der Walt, Commissioner for Inland Revenue, hereby give notice in terms of section 13 (6) of the Sales Tax Act, 1978 (Act 103 of 1978), that subsequent to the cancellation of the sales tax registration certificate issued to the vendor mentioned in the Schedule hereto as notified by Notice 85 of 1980 published in *Government Gazette* 6833 of 1 February 1980, the registration of the said vendor has been reinstated in consequence whereof a sales tax registration certificate, on which appears the number stated in the third column of the said Schedule, has been issued to such vendor under section 12 of the said Act.

W. J. H. VAN DER WALT, Commissioner for Inland Revenue.

BYLAE/SCHEDULE

Naam van Ondernemer en/of onderneming Name of Vendor and/or enterprise	Adres Address	Nommer wat verskyn op verkoopbelastingregistrasiesertifikaat uitgereik ingevolge artikel 12 van Verkoopbelastingwet, 1978 Number appearing on sales tax registration certificate issued in terms of section 12 of Sales Tax Act, 1978
Phyl Maureen (Edms.) Bpk., handeldrywende as Barkly Batteries/Phyl Maureen (Pty) Ltd, trading as Barkly Batteries	Saambougebou, Dutoitspanweg, Posbus 1101, Kimberley/Saambou Buildings, Du Toitspan Road, P.O. Box 1101, Kimberley	802108806055

Opmerking.—Die uitwerking van die herstel van die registrasie van die betrokke ondernemer is dat sodanige ondernemer geregtig is om die bogemelde verkoopbelastingregistrasiesertifikaat aan te wend vir doeleindes van sodanige vrystellings wat ingevolge die Verkoopbelastingwet, 1978, by voorlegging van die sertifikaat of 'n reproduksie daarvan geëis mag word.

Note.—The effect of the reinstatement of the registration of the vendor in question is that such vendor is entitled to use the abovementioned sales tax registration certificate for the purpose of such exemptions under the Sales Tax Act, 1978, as may be claimed upon the production of such certificate or any reproduction thereof.

(5 September 1980)

KENNISGEWING 614 VAN 1980

DEPARTEMENT VAN MANNEKRAGBENUTTING

WET OP NYWERHEIDSVERSOENING, 1956

INTREKKING VAN REGISTRASIE VAN 'N WERKGEWERSORGANISASIE

Ek, Mattheus Willem Johannes le Roux, Nywerheidsregistrateur, maak hierby kragtens artikel 14 (1) van die Wet op Nywerheidsversoening, 1956, bekend dat aangesien ek rede het om te vermoed dat die Hydraulics and Pneumatics Association gelikwideer is, sy registrasie ingetrek sal word tensy redes daarteen binne 'n tydperk van 30 dae vanaf die datum van publikasie van hierdie kennisgewing aangevoer word.

M. W. J. LE ROUX, Nywerheidsregistrateur.

(5 September 1980)

NOTICE 614 OF 1980

DEPARTMENT OF MANPOWER UTILISATION

INDUSTRIAL CONCILIATION ACT, 1956

CANCELLATION OF REGISTRATION OF AN EMPLOYERS' ORGANISATION

I, Mattheus Willem Johannes le Roux, Industrial Registrar, hereby notify in terms of section 14 (1) of the Industrial Conciliation Act, 1956, that as I have reason to believe that the Hydraulics and Pneumatics Association has been wound up, its registration will be cancelled unless cause to the contrary is shown within a period of 30 days from the date of publication of this notice.

M. W. J. LE ROUX, Industrial Registrar.

(5 September 1980)

University of Fort Hare
Together in Excellence

CONT

IN LUMINE TUO VIDEBIMUS LUMEN
University of Fort Hare
Together in Excellence